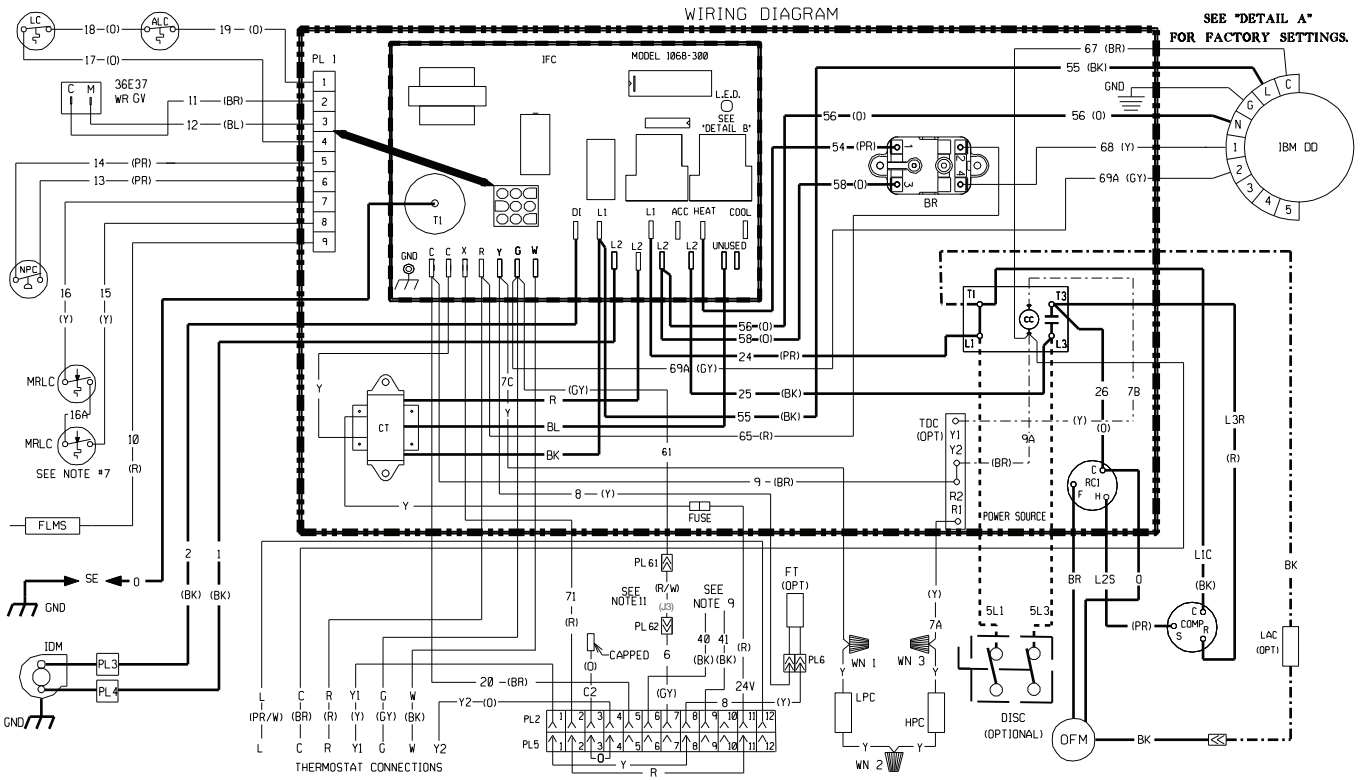

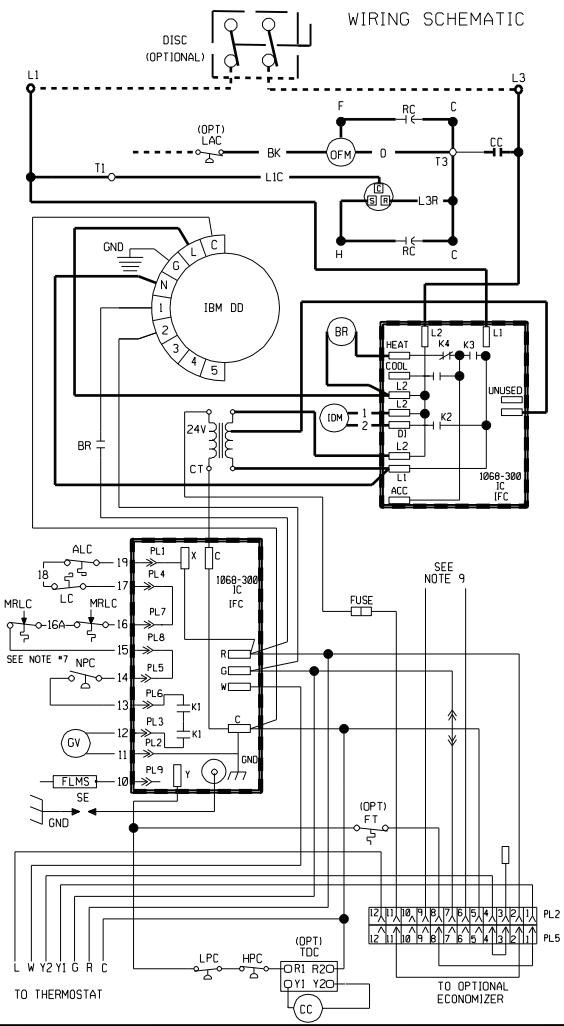

DETAIL " A"

NOMINAL COOLING CAPACITY	MOTOR SPEED FROM FACTORY HEAT	COOL	AVAILABLE SPEEDS
3 TON	80K MED (TAP 3)	LOW (TAP 2)	LOW (TAP 1)
	120K HIGH (TAP 4)		LOW /W DELAY (TAP 2)
			MED (TAP 3)
			HIGH (TAP 4)
3.5 TON	80K MED (TAP 3)	MED (TAP 2)	LOW (TAP 1)
	120K HIGH (TAP 4)		MED /W DELAY (TAP 2)
			MED (TAP 3)
			HIGH (TAP 4)
4 TON	80K LOW (TAP 1)	MED (TAP 2)	LOW (TAP 1)
	100K MED (TAP 2)		MED /W DELAY (TAP 2)
	135K HIGH (TAP 4)		MED (TAP 3)
			HIGH (TAP 4)
5 TON	100K LOW (TAP 1)	MED (TAP 2)	LOW (TAP 1)
	135K HIGH (TAP 3)		MED /W DELAY (TAP 2)
			HIGH (TAP 3)

DIFFERENT SPEEDS FOR COOLING & HEATING

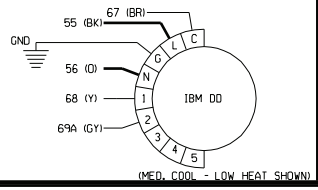

(MED. COOL - LOW HEAT SHOWN)

DETAIL "B"

DIAGNOSTICS

1 FLASH - FAILED TO DETECT OR SUSTAIN FLAME.

2 FLASH - PRESSURE SWITCH OR INDUCER PROBLEM DETECTED.

3 FLASH - HIGH LIMIT SWITCH PROTECTION DEVICE OPEN.

4 FLASH - FLAME SENSED AND GAS VALVE NOT ENERGIZED OR FLAME SENSED AND NO "W" SIGNAL.

5 FLASH - FLAME ROLL OUT SWITCH OPEN.

WIRING INFORMATION

LINE VOLTAGE
-FACTORY STANDARD
-FACTORY OPTION
-FIELD INSTALLED

LOW VOLTAGE
-FACTORY STANDARD
-FIELD INSTALLED

REPLACEMENT WIRE
-MUST BE THE SAME SIZE AND TYPE OF INSULATION AS ORIGINAL (105C. MIN.)

WARNING
-CABINET MUST BE PERMANENTLY GROUNDED AND CONFORM TO I.E.C., N.E.C., C.E.C., NATIONAL WIRING REGULATIONS, AND LOCAL CODES AS APPLICABLE.

NOTES

1. CONNECTORS SUITABLE FOR USE WITH COPPER CONDUCTORS ONLY.
2. COMPRESSOR MOTOR THERMALLY PROTECTED. ALL 3 PHASE MODELS ARE PROTECTED UNDER PRIMARY SINGLE PHASE CONDITIONS.
3. CONTROL TRANSFORMER PRIMARY LEADS: RED-COMMON, BLUE-208V, BLACK 230V. TRANSFORMER FACTORY WIRED FOR 230 VOLTS. INTERCHANGE BLACK FOR BLUE LEADS FOR 208V OPERATION.
4. CONTACTOR FACTORY WIRED. CONNECT FIELD WIRE TO FACTORY SUPPLIED CONTACTOR IN ELECTRICAL BOX.
5. LOW VOLTAGE CIRCUIT IS N.E.C. CLASS 2 WITH A CLASS 2 TRANSFORMER. 24V, 50/60 HZ SUPPLIED.
6. CONNECT FIELD WIRING IN GROUNDED RAIN TIGHT CONDUIT TO 60 HZ FUSED DISCONNECT.
7. ONLY ONE MRLC IS NEEDED ON THE 80,000 INPUT UNIT.
8. MOTOR FACTORY WIRED FOR CORRECT SPEED.
9. WIRED FROM PL2 (6 & 9) GO TO THE MIXED AIR SENSOR ON THE OPTIONAL ECONOMIZER.
10. Y2 IS USED ONLY FOR THE OPTIONAL ECONOMIZER.
11. REMOVE JUMPER FOR FIELD INSTALLED OCCUPANCY RELAY.

COMPONENT CODES

ALC	AUX. LIMIT CONTROL	IDM	INDUCED DRAFT MOTOR
BR	BLOWER RELAY	IFC	INTEGRATED FURNACE CONTROL
CC	COMPRESSOR CONTACTOR	LAC	LOW AMBIENT COOLING CONTROL
COMP	COMPRESSOR	LC	LIMIT CONTROL
CT	CONTROL TRANSFORMER	LPC	LOW PRESSURE CONTROL
DISC	DISCONNECT SWITCH	MRLC	MANUAL RESET LIMIT CONTROL
FLMS	FLAME SENSOR	NPC	NEGATIVE PRESSURE CONTROL
FT	FREEZE STAT	OFM	OUTDOOR FAN MOTOR
GL	GROUND LUG	PL	PLUG
GND	GROUND	RC	RUN CAPACITOR
GV	GAS VALVE	SE	SPARK ELECTRODE
HPC	HIGH PRESSURE CONTROL	TDC	TIME DELAY CONTROL
IBM	INDOOR BLOWER MOTOR DIRECT DRIVE	WN	WIRE NUT

WIRE COLOR CODE

BK.....BLACK	G.....GREEN	PR.....PURPLE
BR.....BROWN	GY.....GRAY	R.....RED
BL.....BLUE	O.....ORANGE	W.....WHITE
		Y.....YELLOW

ELECTRICAL WIRING DIAGRAM

208 / 230, 1 PHASE
DIRECT DRIVE W/ X-MOTOR

APPROVED:	CHECKED:	ORIGINAL RELEASE NO.:	
MODELED BY: MGR	DATE: 2-11-13	R-1058S007	
PART NO.: 90-23596-38		REV: 03	