INSTALLATION INSTRUCTIONS

PACKAGE GAS ELECTRIC FEATURING NEW INDUSTRY STANDARD R-410A REFRIGERANT

RKKL-B SERIES 15 & 20 TON [52.8 & 70.3 kW]

COMPLIES WITH ASHRAE 90.1-2007

RECOGNIZE THIS SYMBOL AS AN INDICATION OF IMPORTANT SAFETY INFORMATION!

⚠ WARNING

THESE INSTRUCTIONS ARE INTENDED AS AN AID TO QUALIFIED, LICENSED SERVICE PERSONNEL FOR PROPER INSTALLATION, ADJUSTMENT AND OPERATION OF THIS UNIT. READ THESE INSTRUCTIONS THOROUGHLY BEFORE ATTEMPTING INSTALLATION OR OPERATION. FAILURE TO FOLLOW THESE INSTRUCTIONS MAY RESULT IN IMPROPER INSTALLATION, ADJUSTMENT, SERVICE OR MAINTENANCE POSSIBLY RESULTING IN FIRE, ELECTRICAL SHOCK, PROPERTY DAMAGE, PERSONAL INJURY OR DEATH.

AHRI CERTIFIED™ www.ahridirectory.org
Unitary Large AC
AHRI Standard 340/360
Certification applies only when the complete system is listed with AHRI.

c UL us LISTED

Accredited by the RvA
ABS Quality Evaluations, Inc. Management System Certification
ANAB ACCREDITED
ISO 9001:2008
Certificate Number: 30164

DO NOT DESTROY THIS MANUAL

PLEASE READ CAREFULLY AND KEEP IN A SAFE PLACE FOR FUTURE REFERENCE BY A SERVICEMAN

[ ] INDICATES METRIC CONVERSIONS

92-23577-113-01
SUPERSEDES 92-23577-113-00

TABLE OF CONTENTS

Recognize this symbol as an indication of Important Safety Information!

⚠ WARNING

THE MANUFACTURER'S WARRANTY DOES NOT COVER ANY DAMAGE OR DEFECT TO THE AIR CONDITIONER CAUSED BY THE ATTACHMENT OR USE OF ANY COMPONENTS, ACCESSORIES OR DEVICES (OTHER THAN THOSE AUTHORIZED BY THE MANUFACTURER) INTO, ONTO OR IN CONJUNCTION WITH THE AIR CONDITIONER. YOU SHOULD BE AWARE THAT THE USE OF UNAUTHORIZED COMPONENTS, ACCESSORIES OR DEVICES MAY ADVERSELY AFFECT THE OPERATION OF THE AIR CONDITIONER AND MAY ALSO ENDANGER LIFE AND PROPERTY. THE MANUFACTURER DISCLAIMS ANY RESPONSIBILITY FOR SUCH LOSS OR INJURY RESULTING FROM THE USE OF SUCH UNAUTHORIZED COMPONENTS, ACCESSORIES OR DEVICES.

⚠ WARNING

UNITS ARE NOT DESIGN CERTIFIED TO BE INSTALLED INSIDE THE STRUCTURE. DOING SO CAN CAUSE INADEQUATE UNIT PERFORMANCE AS WELL AS PROPERTY DAMAGE AND CARBON MONOXIDE POISONING RESULTING IN PERSONAL INJURY OR DEATH.

⚠ WARNING

PROVIDE ADEQUATE COMBUSTION AND VENTILATION AIR TO THE UNIT SPACE AS SPECIFIED IN THE COMBUSTION AND VENTILATION AIR SECTION OF THESE INSTRUCTIONS.

CHECKING PRODUCT RECEIVED

This booklet contains the installation and operating instructions for your combination gas heating/electric cooling unit. There are some precautions that should be taken to derive maximum satisfaction from it. Improper installation can result in unsatisfactory operation or dangerous conditions.

Read this booklet and any instructions packaged with separate equipment required to make up the system prior to installation. Give this booklet to the owner and explain its provisions. The owner should retain this booklet for future reference.

EQUIPMENT PROTECTION FROM THE ENVIRONMENT

Upon receiving the unit, inspect it for any damage from shipment. Claims for damage, either shipping or concealed, should be filed immediately with the shipping company. **IMPORTANT:** Check the unit model number, heating size, electrical characteristics, and accessories to determine if they are correct.

I. SPECIFICATIONS

A. GENERAL

The Combination Gas Heating/Electric Cooling Rooftop is available in 250,000 AND 350,000 BTUH heating input with nominal cooling capacity of 15 tons. 300,000 and 400,000 BTUH heating inputs are available in nominal cooling capacity of 20 tons. Units are convertible from bottom supply and return to side supply and return by relocation of supply and return air cover panels. See cover installation detail and Figures 10 &11.

The units are weatherized for mounting outside of the building.

B. MAJOR COMPONENTS

The unit includes a hermetically-sealed refrigerating system consisting of a scroll compressor, condenser coil, evaporator coil with capillary tube assembly or TXV, a circulation air blower, condenser fans, a heat exchanger assembly, gas burner and control assembly, combustion air motors and fan, and all necessary internal electrical wiring. The cooling system of these units is factory-evacuated, charged and performance tested. Refrigerant amount and type are indicated on rating plate.

C. R410A REFRIGERANT

All units are factory charged with R-410A refrigerant.

1. Specification of R-410A:

Application: R-410A is not a drop-in replacement for R-22; equipment designs must accommodate its higher pressures. It cannot be retrofitted into R-22 units.

Pressure: The pressure of R-410A is approximately 60% (1.6 times) greater than R-22. Recovery and recycle equipment, pumps, hoses, and the like need to have design pressure ratings appropriate for R-410A. *Manifold sets need to range up to 800 psig high-side and 250 psig low-side with a 550 psig low-side retard. Hoses need to have a service pressure rating of 800 psig. Recovery cylinders need to have a 400 psig service pressure rating.* DOT 4BA400 or DOT BW400.

Combustibility: At pressures above 1 atmosphere, mixture of R-410A and air can become combustible. **R-410A and air should never be mixed in tanks or supply lines, or be allowed to accumulate in storage tanks. Leak checking should never be done with a mixture of R-410A and air.** Leak checking can be performed safely with nitrogen or a mixture of R-410A and nitrogen.

2. Quick Reference Guide For R-410A

- R-410A refrigerant operates at approximately 60% higher pressure (1.6 times) than R-22. Ensure that servicing equipment is designed to operate with R-410A.
- R-410A refrigerant cylinders are pink.
- R-410A, as with other HFC's is only compatible with POE oils.
- Vacuum pumps will not remove moisture from POE oil.

- R-410A systems are to be charged with liquid refrigerants. Prior to March 1999, R-410A refrigerant cylinders had a dip tube. These cylinders should be kept upright for equipment charging. Post March 1999 cylinders do not have a dip tube and should be inverted to ensure liquid charging of the equipment.
- Do not install a suction line filter drier in the liquid line.
- A liquid line filter drier is standard on every unit.
- Desiccant (drying agent) must be compatible for POE oils and R-410A.

3. Evaporator Coil/ Expansion Device

The capillary tubes are specifically designed to operate with R-410A. **DO NOT use an R-22 expansion device. The existing evaporator must be replaced with the factory specified evaporator specifically designed for R-410A.**

4. Tools Required For Installing & Servicing R-410A Models

Manifold Sets:
-Up to 800 PSIG High Side
-Up to 250 PSIG Low Side
-550 PSIG Low Side Retard

Manifold Hoses:
-Service Pressure Rating of 800 PSIG

Recovery Cylinders:
-400 PSIG Pressure Rating
-Dept. of Transportation 4BA400 or BW400

⚠ CAUTION

R-410A systems operate at higher pressures than R-22 systems. Do not use R-22 service equipment or components on R-410A equipment.

SAFETY INFORMATION

⚠ WARNING

USE ONLY WITH TYPE OF GAS APPROVED FOR THIS UNIT. REFER TO THE UNIT RATING PLATE.

⚠ WARNING

INSTALL THIS UNIT ONLY IN A LOCATION AND POSITION AS SPECIFIED IN THE LOCATION REQUIREMENTS AND CONSIDERATIONS SECTION OF THESE INSTRUCTIONS. PROVIDE ADEQUATE COMBUSTION AND VENTILATION AIR TO THE UNIT SPACE AS SPECIFIED IN THE VENTING SECTION OF THESE INSTRUCTIONS.

⚠ WARNING

PROVIDE ADEQUATE COMBUSTION AND VENTILATION AIR TO THE UNIT SPACE AS SPECIFIED IN THE COMBUSTION AND VENTILATION AIR SECTION OF THESE INSTRUCTIONS.

⚠ WARNING

COMBUSTION PRODUCTS MUST BE DISCHARGED OUTDOORS. CONNECT THIS UNIT TO AN APPROVED VENT SYSTEM ONLY, AS SPECIFIED IN VENT PIPE INSTALLATION SECTION OF THESE INSTRUCTIONS.

⚠ WARNING

NEVER TEST FOR GAS LEAKS WITH AN OPEN FLAME. USE A COMMERCIALLY AVAILABLE SOAP SOLUTION MADE SPECIFICALLY FOR THE DETECTION OF LEAKS TO CHECK ALL CONNECTIONS, AS SPECIFIED IN GAS SUPPLY AND PIPING SECTION OF THESE INSTRUCTIONS.

⚠ WARNING

ALWAYS INSTALL UNIT TO OPERATE WITHIN THE UNIT'S INTENDED TEMPERATURE-RISE RANGE WITH A DUCT SYSTEM WHICH HAS AN EXTERNAL STATIC PRESSURE WITHIN THE ALLOWABLE RANGE, AS SPECIFIED IN DUCTING SECTION OF THESE INSTRUCTIONS. SEE ALSO UNIT RATING PLATE.

⚠ WARNING

WHEN A UNIT IS INSTALLED SO THAT SUPPLY DUCTS CARRY AIR CIRCULATED BY THE UNIT TO AREAS OUTSIDE THE SPACE CONTAINING THE UNIT, THE RETURN AIR SHALL ALSO BE HANDLED BY DUCT(S) SEALED TO THE UNIT CASING AND TERMINATING OUTSIDE THE SPACE CONTAINING THE UNIT.

⚠ WARNING

THIS UNIT MAY BE USED TO HEAT THE BUILDING OR STRUCTURE DURING CONSTRUCTION IF THE FOLLOWING INSTALLATION REQUIREMENTS ARE MET. INSTALLATION MUST COMPLY WITH ALL INSTALLATION INSTRUCTIONS INCLUDING:

- PROPER VENT INSTALLATION;
- FURNACE OPERATING UNDER THERMOSTATIC CONTROL;
- RETURN AIR DUCT SEALED TO THE FURNACE;
- AIR FILTERS IN PLACE;
- SET FURNACE INPUT RATE AND TEMPERATURE RISE PER RATING PLATE MARKING;
- MEANS OF PROVIDING OUTDOOR AIR REQUIRED FOR COMBUSTION;
- RETURN AIR TEMPERATURE MAINTAINED BETWEEN 55°F (13°C) AND 80°F (27°C); AND
- INSTALLATION OF EXHAUST AND COMBUSTION AIR INLET HOODS COMPLETED;
- CLEAN FURNACE, DUCT WORK AND COMPONENTS UPON SUBSTANTIAL COMPLETION OF THE CONSTRUCTION PROCESS, AND VERIFY FURNACE OPERATING CONDITIONS INCLUDING IGNITION, INPUT RATE, TEMPERATURE RISE AND VENTING ACCORDING TO THE INSTRUCTIONS.

Unit Dimensions

FOR CLEARANCES SEE PAGE 12, FIGURE 12.

IMPORTANT: THIS UNIT MUST BE MOUNTED LEVEL IN BOTH DIRECTIONS TO ALLOW WATER TO DRAIN FROM THE CONDENSER SECTION AND CONDENSATE PAN.

FIGURE 1
BOTTOM VIEW

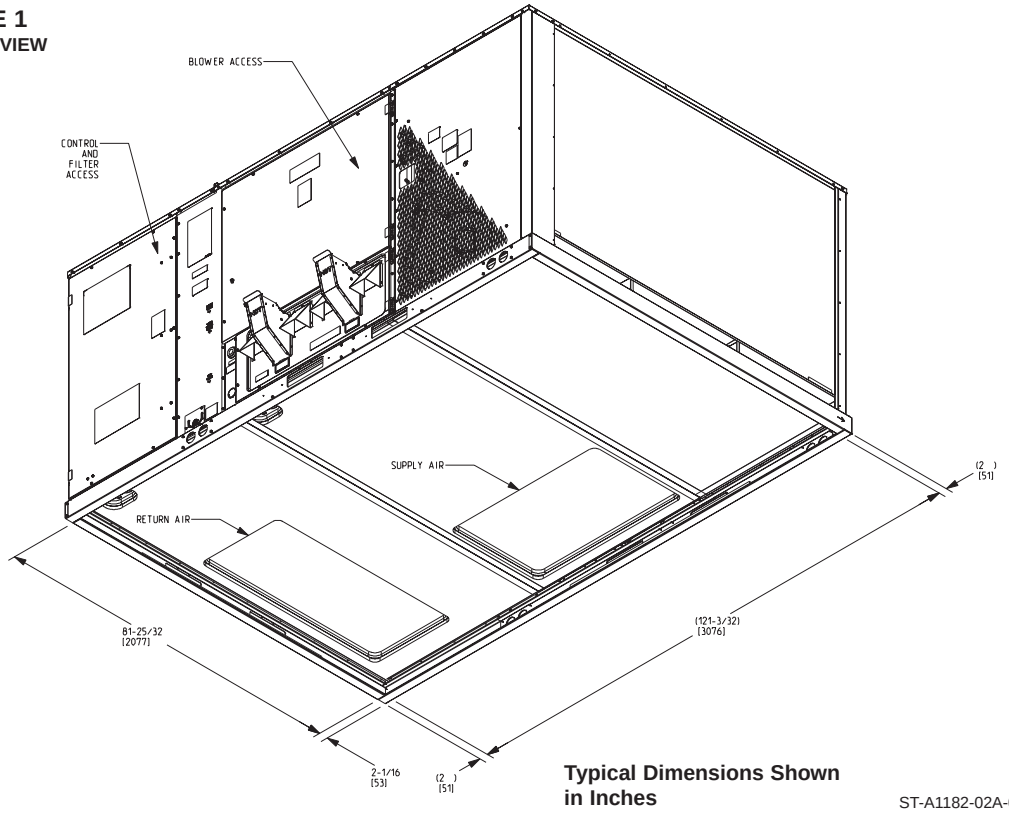

Typical Dimensions Shown in Inches

ST-A1182-02A-00

FIGURE 2
SUPPLY AND RETURN DIMENSIONS FOR DOWNFLOW APPLICATIONS – BOTTOM VIEW

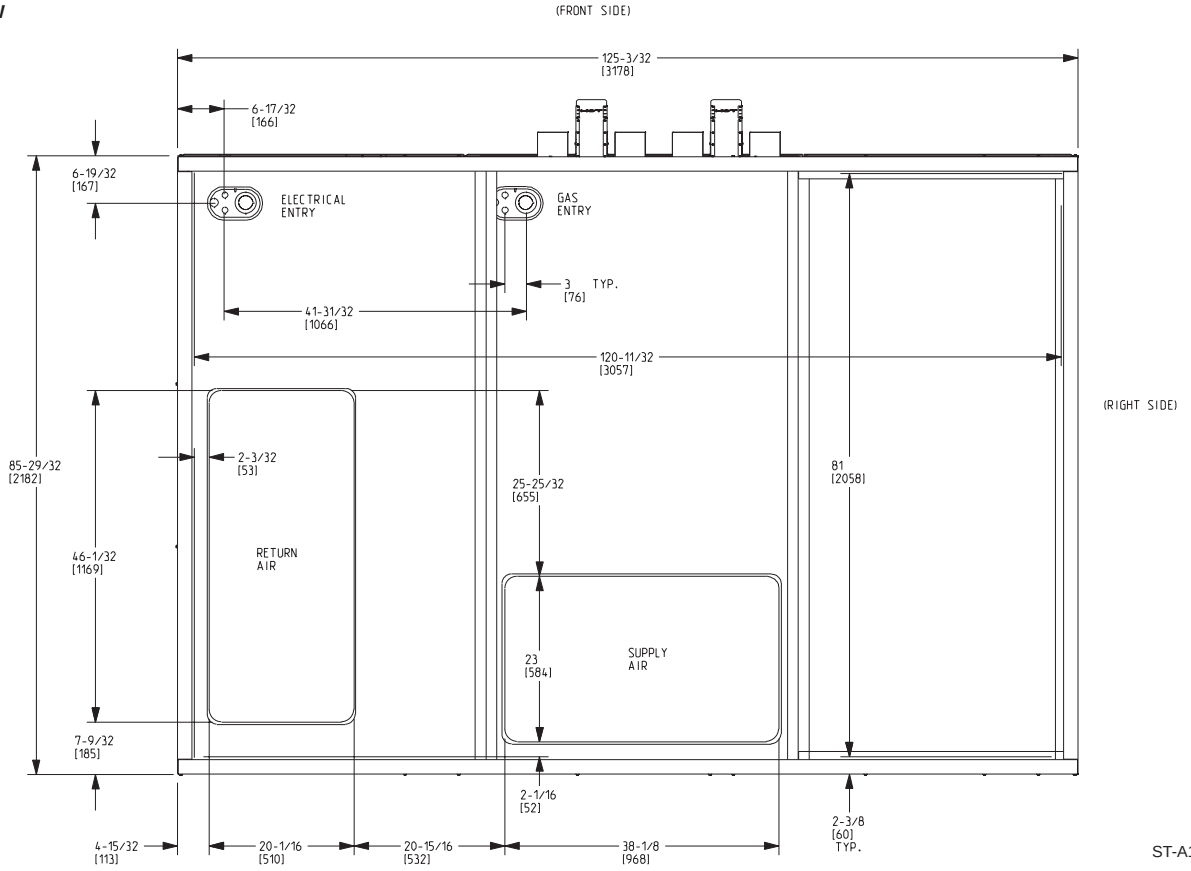

ST-A1182-09A-00

FIGURE 3
COMPONENT LOCATIONS & DIMENSIONS

FRONT VIEW

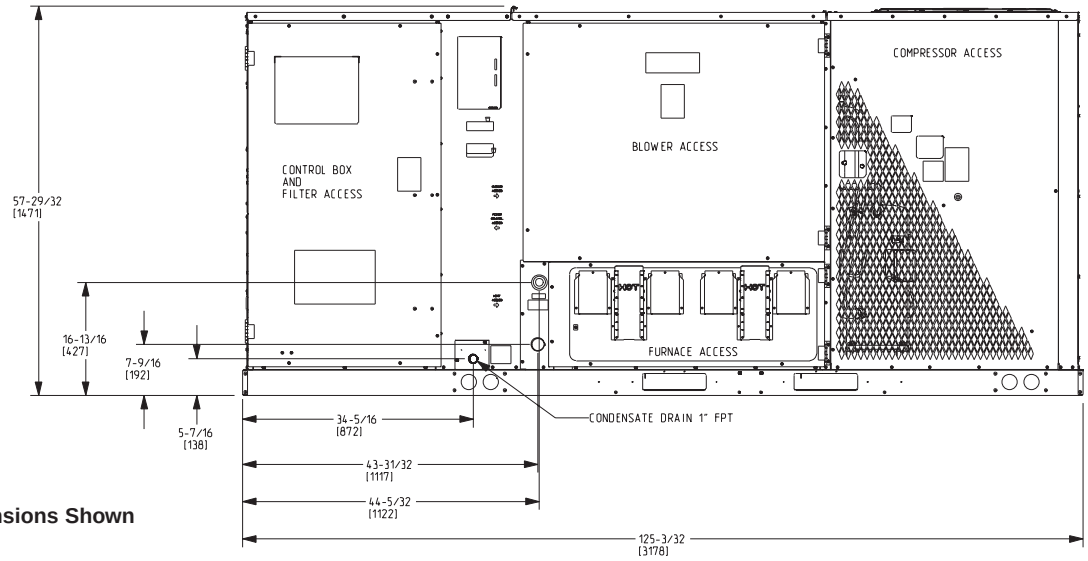

Typical Dimensions Shown in Inches

ST-A1182-06A-00

FIGURE 4
COMPONENT LOCATIONS & DIMENSIONS

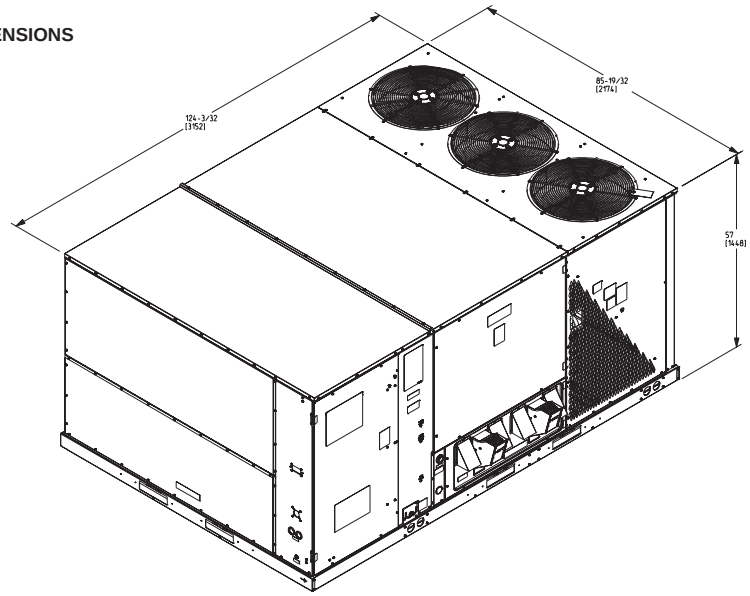

ST-A1182-01A-00

FIGURE 5
COMPONENT LOCATIONS

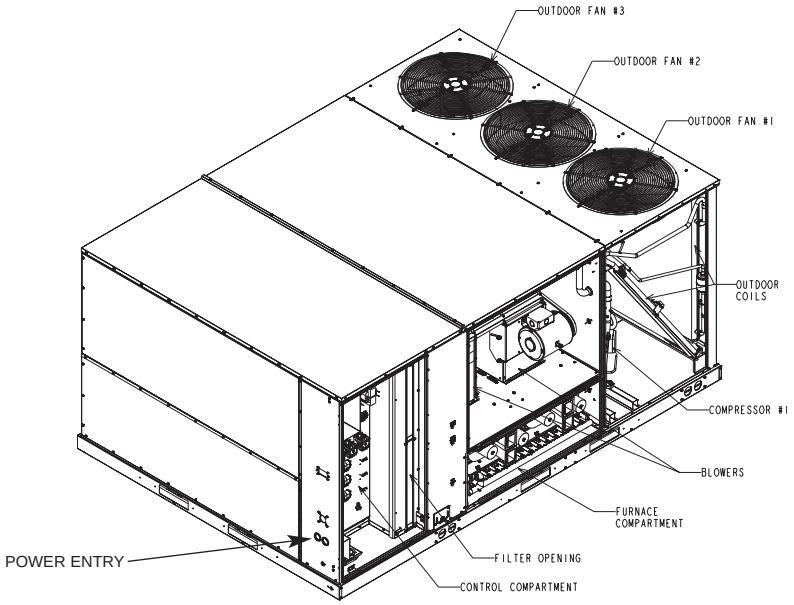

ST-A1182-04A-00

FIGURE 6
DIMENSIONS

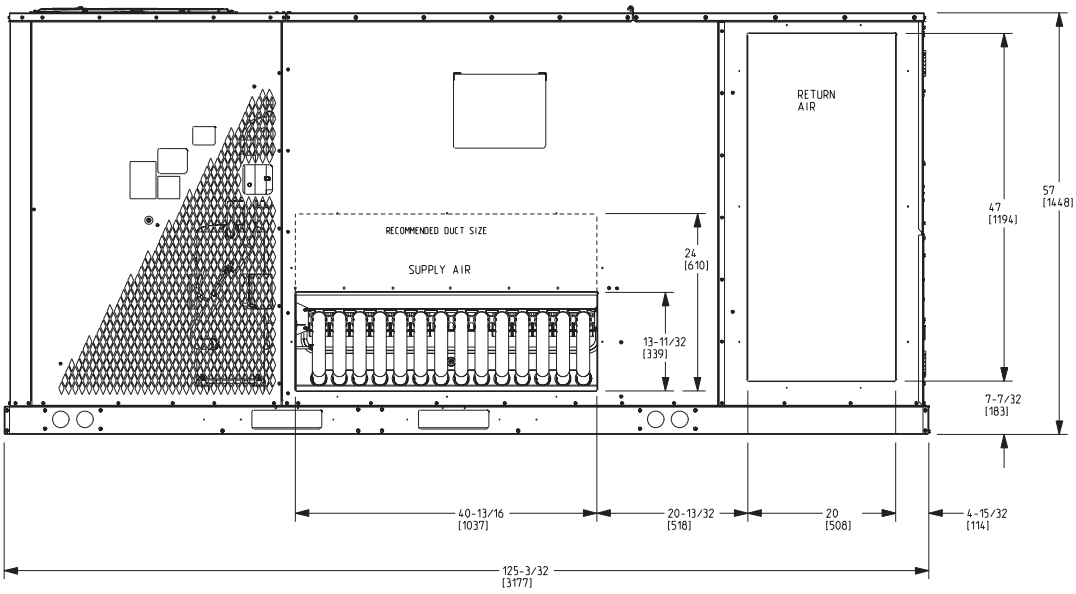

ST-A1182-08A-00

FIGURE 7
COMPONENT ACCESS LOCATIONS & DIMENSIONS

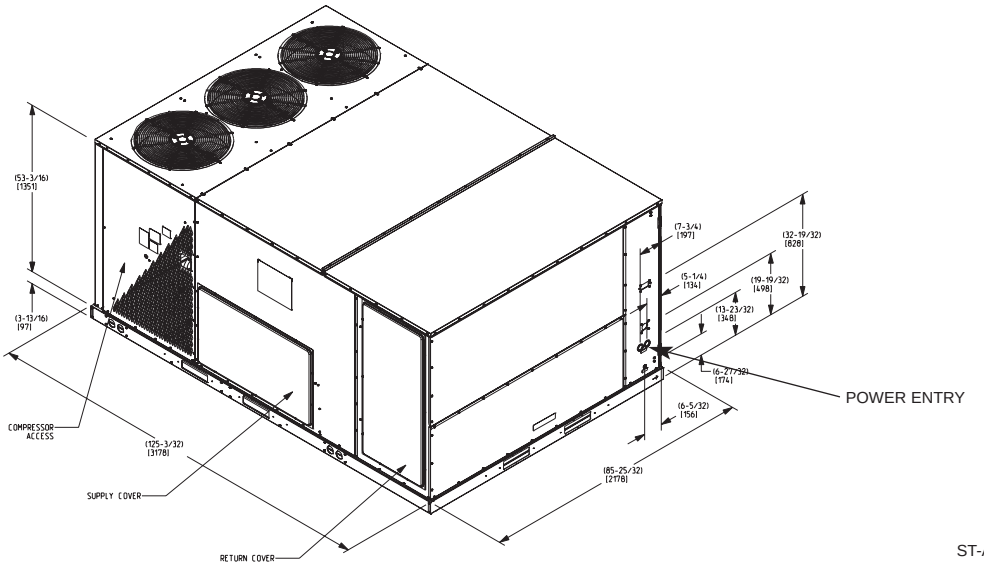

ST-A1182-03-00

FIGURE 8
COMPONENT LOCATIONS

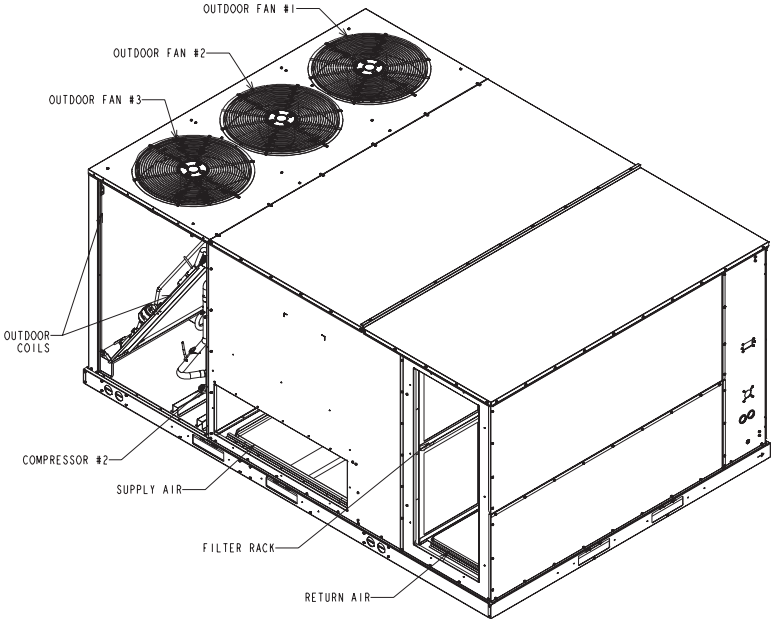

ST-A1182-05-00

GENERAL DATA - RKKL

Model RKKL-Series	B180CL25E	B180CL35E	B180CM25E	B180CM35E
Cooling Performance[1]				CONTINUED →
Gross Cooling Capacity Btu [kW]	174,000 [50.98]	174,000 [50.98]	174,000 [50.98]	174,000 [50.98]
EER/SEER[2]	10.9/NA	10.9/NA	10.9/NA	10.9/NA
Nominal CFM/AHRI Rated CFM [L/s]	6000/5500 [2931/2595]	6000/5500 [2931/2595]	6000/5500 [2931/2595]	6000/5500 [2931/2595]
AHRI Net Cooling Capacity Btu [kW]	170,000 [49.81]	170,000 [49.81]	170,000 [49.81]	170,000 [49.81]
Net Sensible Capacity Btu [kW]	125,400 [36.74]	125,400 [36.74]	125,400 [36.74]	125,400 [36.74]
Net Latent Capacity Btu [kW]	44,600 [13.07]	44,600 [13.07]	44,600 [13.07]	44,600 [13.07]
IEER[3]	11.1	11.1	11.1	11.1
Net System Power kW	15.6	15.6	15.6	15.6
Heating Performance (Gas)[4]				
Heating Input Btu [kW] (1st Stage / 2nd Stage)	125,000/250,000 [36.62/73.25]	175,000/350,000 [51.27/102.55]	125,000/250,000 [36.62/73.25]	175,000/350,000 [51.27/102.55]
Heating Output Btu [kW] (1st Stage / 2nd Stage)	101,500/203,000 [29.74/59.48]	142,000/284,000 [41.61/83.21]	101,500/203,000 [29.74/59.48]	142,000/284,000 [41.61/83.21]
Temperature Rise Range °F [°C] (1st Stage / 2nd Stage)	15-45 [8.3-25] / 15-45 [8.3-25]	30-60 [16.7-33.3] / 30-60 [16.7-33.3]	15-45 [8.3-25] / 15-45 [8.3-25]	30-60 [16.7-33.3] / 30-60 [16.7-33.3]
Steady State Efficiency (%)	81	81	81	81
No. Burners	10	14	10	14
No. Stages	2	2	2	2
Gas Connection Pipe Size in. [mm]	0.75 [19]	0.75 [19]	0.75 [19]	0.75 [19]
Compressor				
No./Type	2/Scroll	2/Scroll	2/Scroll	2/Scroll
Outdoor Sound Rating (dB)[5]	91	91	91	91
Outdoor Coil—Fin Type	Louvered	Louvered	Louvered	Louvered
Tube Type	MicroChannel	MicroChannel	MicroChannel	MicroChannel
MicroChannel Depth in. [mm]	1 [25.4]	1 [25.4]	1 [25.4]	1 [25.4]
Face Area sq. ft. [sq. m]	27.46 [2.55]	27.46 [2.55]	27.46 [2.55]	27.46 [2.55]
Rows / FPI [FPcm]	1 / 23 [9]	1 / 23 [9]	1 / 23 [9]	1 / 23 [9]
Indoor Coil—Fin Type	Louvered	Louvered	Louvered	Louvered
Tube Type	Rifled	Rifled	Rifled	Rifled
Tube Size in. [mm]	0.375 [9.5]	0.375 [9.5]	0.375 [9.5]	0.375 [9.5]
Face Area sq. ft. [sq. m]	26.67 [2.48]	26.67 [2.48]	26.67 [2.48]	26.67 [2.48]
Rows / FPI [FPcm]	2 / 18 [7]	2 / 18 [7]	2 / 18 [7]	2 / 18 [7]
Refrigerant Control	Capillary Tubes	Capillary Tubes	Capillary Tubes	Capillary Tubes
Drain Connection No./Size in. [mm]	1/1 [25.4]	1/1 [25.4]	1/1 [25.4]	1/1 [25.4]
Outdoor Fan—Type	Propeller	Propeller	Propeller	Propeller
No. Used/Diameter in. [mm]	3/24 [609.6]	3/24 [609.6]	3/24 [609.6]	3/24 [609.6]
Drive Type/No. Speeds	Direct/1	Direct/1	Direct/1	Direct/1
CFM [L/s]	10000 [4719]	10000 [4719]	10000 [4719]	10000 [4719]
No. Motors/HP	3 at 1/2 HP	3 at 1/2 HP	3 at 1/2 HP	3 at 1/2 HP
Motor RPM	1075	1075	1075	1075
Indoor Fan—Type	FC Centrifugal	FC Centrifugal	FC Centrifugal	FC Centrifugal
No. Used/Diameter in. [mm]	2/18x9 [457x229]	2/18x9 [457x229]	2/18x9 [457x229]	2/18x9 [457x229]
Drive Type/No. Speeds	Belt/Variable	Belt/Variable	Belt/Variable	Belt/Variable
No. Motors	1	1	1	1
Motor HP	3	3	5	5
Motor RPM	1725	1725	1725	1725
Motor Frame Size	56	56	184	184
Filter—Type	Disposable	Disposable	Disposable	Disposable
Furnished	Yes	Yes	Yes	Yes
(NO.) Size Recommended in. [mm x mm x mm]	(8)2x25x20 [51x635x508]	(8)2x25x20 [51x635x508]	(8)2x25x20 [51x635x508]	(8)2x25x20 [51x635x508]
Refrigerant Charge Oz. (Sys. 1/Sys. 2) [g]	115/119 [3260/3374]	115/119 [3260/3374]	115/119 [3260/3374]	115/119 [3260/3374]
Weights				
Net Weights lbs. [kg]	1799 [816]	1812 [823]	1828 [829]	1841 [835]
Ship Weights lbs. [kg]	1926 [874]	1939 [880]	1955 [887]	1968 [893]

NOTES:

1. Cooling Performance is rated at 95° F ambient, 80° F entering dry bulb, 67° F entering wet bulb. Gross capacity does not include the effect of fan motor heat. AHRI capacity is net and includes the effect of fan motor heat. Units are suitable for operation to 20% of nominal cfm. Units are certified in accordance with the Unitary Air Conditioner Equipment certification program, which is based on AHRI Standard 210/240 or 360.
2. EER and/or SEER are rated at AHRI conditions and in accordance with DOE test procedures.
3. IEER is rated in accordance with AHRI standard 340/360.
4. Heating Performance limit settings and rating data were established and approved under laboratory test conditions using American National Standard Institute standards. Ratings shown are for elevations up to 2000 feet. For elevations above 2000 feet, ratings should be reduced at the rate of 4% for each 1000 feet above sea level.
5. Outdoor Sound Rating shown is tested in accordance with AHRI Standard 270.

GENERAL DATA - RKKL

Model RKKL-Series	B180DL25E	B180DL35E	B180DM25E	B180DM35E
Cooling Performance[1]				CONTINUED →
Gross Cooling Capacity Btu [kW]	174,000 [50.98]	174,000 [50.98]	174,000 [50.98]	174,000 [50.98]
EER/SEER[2]	10.9/NA	10.9/NA	10.9/NA	10.9/NA
Nominal CFM/AHRI Rated CFM [L/s]	6000/5500 [2931/2595]	6000/5500 [2931/2595]	6000/5500 [2931/2595]	6000/5500 [2931/2595]
AHRI Net Cooling Capacity Btu [kW]	170,000 [49.81]	170,000 [49.81]	170,000 [49.81]	170,000 [49.81]
Net Sensible Capacity Btu [kW]	125,400 [36.74]	125,400 [36.74]	125,400 [36.74]	125,400 [36.74]
Net Latent Capacity Btu [kW]	44,600 [13.07]	44,600 [13.07]	44,600 [13.07]	44,600 [13.07]
IEER[3]	11.1	11.1	11.1	11.1
Net System Power kW	15.6	15.6	15.6	15.6
Heating Performance (Gas)[4]				
Heating Input Btu [kW] (1st Stage / 2nd Stage)	125,000/250,000 [36.62/73.25]	175,000/350,000 [51.27/102.55]	125,000/250,000 [36.62/73.25]	175,000/350,000 [51.27/102.55]
Heating Output Btu [kW] (1st Stage / 2nd Stage)	101,500/203,000 [29.74/59.48]	142,000/284,000 [41.61/83.21]	101,500/203,000 [29.74/59.48]	142,000/284,000 [41.61/83.21]
Temperature Rise Range °F [°C] (1st Stage / 2nd Stage)	15-45 [8.3-25] / 15-45 [8.3-25]	30-60 [16.7-33.3] / 30-60 [16.7-33.3]	15-45 [8.3-25] / 15-45 [8.3-25]	30-60 [16.7-33.3] / 30-60 [16.7-33.3]
Steady State Efficiency (%)	81	81	81	81
No. Burners	10	14	10	14
No. Stages	2	2	2	2
Gas Connection Pipe Size in. [mm]	0.75 [19]	0.75 [19]	0.75 [19]	0.75 [19]
Compressor				
No./Type	2/Scroll	2/Scroll	2/Scroll	2/Scroll
Outdoor Sound Rating (dB)[5]	91	91	91	91
Outdoor Coil—Fin Type	Louvered	Louvered	Louvered	Louvered
Tube Type	MicroChannel	MicroChannel	MicroChannel	MicroChannel
MicroChannel Depth in. [mm]	1 [25.4]	1 [25.4]	1 [25.4]	1 [25.4]
Face Area sq. ft. [sq. m]	27.46 [2.55]	27.46 [2.55]	27.46 [2.55]	27.46 [2.55]
Rows / FPI [FPcm]	1 / 23 [9]	1 / 23 [9]	1 / 23 [9]	1 / 23 [9]
Indoor Coil—Fin Type	Louvered	Louvered	Louvered	Louvered
Tube Type	Rifled	Rifled	Rifled	Rifled
Tube Size in. [mm]	0.375 [9.5]	0.375 [9.5]	0.375 [9.5]	0.375 [9.5]
Face Area sq. ft. [sq. m]	26.67 [2.48]	26.67 [2.48]	26.67 [2.48]	26.67 [2.48]
Rows / FPI [FPcm]	2 / 18 [7]	2 / 18 [7]	2 / 18 [7]	2 / 18 [7]
Refrigerant Control	Capillary Tubes	Capillary Tubes	Capillary Tubes	Capillary Tubes
Drain Connection No./Size in. [mm]	1/1 [25.4]	1/1 [25.4]	1/1 [25.4]	1/1 [25.4]
Outdoor Fan—Type	Propeller	Propeller	Propeller	Propeller
No. Used/Diameter in. [mm]	3/24 [609.6]	3/24 [609.6]	3/24 [609.6]	3/24 [609.6]
Drive Type/No. Speeds	Direct/1	Direct/1	Direct/1	Direct/1
CFM [L/s]	10000 [4719]	10000 [4719]	10000 [4719]	10000 [4719]
No. Motors/HP	3 at 1/2 HP	3 at 1/2 HP	3 at 1/2 HP	3 at 1/2 HP
Motor RPM	1075	1075	1075	1075
Indoor Fan—Type	FC Centrifugal	FC Centrifugal	FC Centrifugal	FC Centrifugal
No. Used/Diameter in. [mm]	2/18x9 [457x229]	2/18x9 [457x229]	2/18x9 [457x229]	2/18x9 [457x229]
Drive Type/No. Speeds	Belt/Variable	Belt/Variable	Belt/Variable	Belt/Variable
No. Motors	1	1	1	1
Motor HP	3	3	5	5
Motor RPM	1725	1725	1725	1725
Motor Frame Size	56	56	184	184
Filter—Type	Disposable	Disposable	Disposable	Disposable
Furnished	Yes	Yes	Yes	Yes
(NO.) Size Recommended in. [mm x mm x mm]	(8)2x25x20 [51x635x508]	(8)2x25x20 [51x635x508]	(8)2x25x20 [51x635x508]	(8)2x25x20 [51x635x508]
Refrigerant Charge Oz. (Sys. 1/Sys. 2) [g]	115/119 [3260/3374]	115/119 [3260/3374]	115/119 [3260/3374]	115/119 [3260/3374]
Weights				
Net Weights lbs. [kg]	1799 [816]	1812 [823]	1828 [829]	1841 [835]
Ship Weights lbs. [kg]	1926 [874]	1939 [880]	1955 [887]	1968 [893]

NOTES:

1. Cooling Performance is rated at 95° F ambient, 80° F entering dry bulb, 67° F entering wet bulb. Gross capacity does not include the effect of fan motor heat. AHRI capacity is net and includes the effect of fan motor heat. Units are suitable for operation to 20% of nominal cfm. Units are certified in accordance with the Unitary Air Conditioner Equipment certification program, which is based on AHRI Standard 210/240 or 360.
2. EER and/or SEER are rated at AHRI conditions and in accordance with DOE test procedures.
3. IEER is rated in accordance with AHRI standard 340/360.
4. Heating Performance limit settings and rating data were established and approved under laboratory test conditions using American National Standard Institute standards. Ratings shown are for elevations up to 2000 feet. For elevations above 2000 feet, ratings should be reduced at the rate of 4% for each 1000 feet above sea level.
5. Outdoor Sound Rating shown is tested in accordance with AHRI Standard 270.

GENERAL DATA - RKKL

Model RKKL-Series	B180YL35E	B180YM35E	B240CL30E	B240CL40E
Cooling Performance[1]				CONTINUED →
Gross Cooling Capacity Btu [kW]	174,000 [50.98]	174,000 [50.98]	250,000 [73.25]	250,000 [73.25]
EER/SEER[2]	10.9/NA	10.9/NA	10.5/NA	10.5/NA
Nominal CFM/AHRI Rated CFM [L/s]	6000/5500 [2931/2595]	6000/5500 [2931/2595]	8000/7825 [3775/3693]	8000/7825 [3775/3693]
AHRI Net Cooling Capacity Btu [kW]	170,000 [49.81]	170,000 [49.81]	240,000 [70.32]	240,000 [70.32]
Net Sensible Capacity Btu [kW]	125,400 [36.74]	125,400 [36.74]	175,000 [51.27]	175,000 [51.27]
Net Latent Capacity Btu [kW]	44,600 [13.07]	44,600 [13.07]	65,000 [19.04]	65,000 [19.04]
IEER[3]	11.1	11.1	10.5	10.5
Net System Power kW	15.6	15.6	22.88	22.88
Heating Performance (Gas)[4]				
Heating Input Btu [kW] (1st Stage / 2nd Stage)	175,000/350,000 [51.27/102.55]	175,000/350,000 [51.27/102.55]	150,000/300,000 [43.95/87.9]	200,000/400,000 [58.6/117.2]
Heating Output Btu [kW] (1st Stage / 2nd Stage)	142,000/284,000 [41.61/83.21]	142,000/284,000 [41.61/83.21]	121,500/243,000 [35.6/71.2]	162,000/324,000 [47.47/94.93]
Temperature Rise Range ºF [°C] (1st Stage / 2nd Stage)	30-60 [16.7-33.3] / 30-60 [16.7-33.3]	30-60 [16.7-33.3] / 30-60 [16.7-33.3]	15-45 [8.3-25] / 15-45 [8.3-25]	25-55 [13.9-30.6] / 25-55 [13.9-30.6]
Steady State Efficiency (%)	81	81	81	81
No. Burners	14	14	12	14
No. Stages	2	2	2	2
Gas Connection Pipe Size in. [mm]	0.75 [19]	0.75 [19]	0.75 [19]	0.75 [19]
Compressor				
No./Type	2/Scroll	2/Scroll	2/Scroll	2/Scroll
Outdoor Sound Rating (dB)[5]	91	91	91	91
Outdoor Coil—Fin Type	Louvered	Louvered	Louvered	Louvered
Tube Type	MicroChannel	MicroChannel	MicroChannel	MicroChannel
MicroChannel Depth in. [mm]	1 [25.4]	1 [25.4]	1 [25.4]	1 [25.4]
Face Area sq. ft. [sq. m]	27.46 [2.55]	27.46 [2.55]	50.8 [4.72]	50.8 [4.72]
Rows / FPI [FPcm]	1 / 23 [9]	1 / 23 [9]	1 / 23 [9]	1 / 23 [9]
Indoor Coil—Fin Type	Louvered	Louvered	Louvered	Louvered
Tube Type	Rifled	Rifled	Rifled	Rifled
Tube Size in. [mm]	0.375 [9.5]	0.375 [9.5]	0.375 [9.5]	0.375 [9.5]
Face Area sq. ft. [sq. m]	26.67 [2.48]	26.67 [2.48]	26.67 [2.48]	26.67 [2.48]
Rows / FPI [FPcm]	2 / 18 [7]	2 / 18 [7]	3 / 13 [5]	3 / 13 [5]
Refrigerant Control	Capillary Tubes	Capillary Tubes	Capillary Tubes	Capillary Tubes
Drain Connection No./Size in. [mm]	1/1 [25.4]	1/1 [25.4]	1/1 [25.4]	1/1 [25.4]
Outdoor Fan—Type	Propeller	Propeller	Propeller	Propeller
No. Used/Diameter in. [mm]	3/24 [609.6]	3/24 [609.6]	3/24 [609.6]	3/24 [609.6]
Drive Type/No. Speeds	Direct/1	Direct/1	Direct/1	Direct/1
CFM [L/s]	10000 [4719]	10000 [4719]	10000 [4719]	10000 [4719]
No. Motors/HP	3 at 1/2 HP	3 at 1/2 HP	3 at 1/2 HP	3 at 1/2 HP
Motor RPM	1075	1075	1075	1075
Indoor Fan—Type	FC Centrifugal	FC Centrifugal	FC Centrifugal	FC Centrifugal
No. Used/Diameter in. [mm]	2/18x9 [457x229]	2/18x9 [457x229]	2/18x9 [457x229]	2/18x9 [457x229]
Drive Type/No. Speeds	Belt/Variable	Belt/Variable	Belt/Variable	Belt/Variable
No. Motors	1	1	1	1
Motor HP	3	5	5	5
Motor RPM	1725	1725	1725	1725
Motor Frame Size	56	184	184	184
Filter—Type	Disposable	Disposable	Disposable	Disposable
Furnished	Yes	Yes	Yes	Yes
(NO.) Size Recommended in. [mm x mm x mm]	(8)2x25x20 [51x635x508]	(8)2x25x20 [51x635x508]	(8)2x25x20 [51x635x508]	(8)2x25x20 [51x635x508]
Refrigerant Charge Oz. (Sys. 1/Sys. 2) [g]	115/119 [3260/3374]	115/119 [3260/3374]	200/219 [5670/6209]	200/219 [5670/6209]
Weights				
Net Weights lbs. [kg]	1827 [829]	1856 [842]	2021 [917]	2035 [923]
Ship Weights lbs. [kg]	1954 [886]	1983 [899]	2147 [974]	2162 [981]

NOTES:

1. Cooling Performance is rated at 95° F ambient, 80° F entering dry bulb, 67° F entering wet bulb. Gross capacity does not include the effect of fan motor heat. AHRI capacity is net and includes the effect of fan motor heat. Units are suitable for operation to 20% of nominal cfm. Units are certified in accordance with the Unitary Air Conditioner Equipment certification program, which is based on AHRI Standard 210/240 or 360.
2. EER and/or SEER are rated at AHRI conditions and in accordance with DOE test procedures.
3. IEER is rated in accordance with AHRI standard 340/360.
4. Heating Performance limit settings and rating data were established and approved under laboratory test conditions using American National Standard Institute standards. Ratings shown are for elevations up to 2000 feet. For elevations above 2000 feet, ratings should be reduced at the rate of 4% for each 1000 feet above sea level.
5. Outdoor Sound Rating shown is tested in accordance with AHRI Standard 270.

GENERAL DATA - RKKL

Model RKKL-Series	B240CM30E	B240CM40E	B240CN30E	B240CN40E
Cooling Performance[1]				CONTINUED →
Gross Cooling Capacity Btu [kW]	250,000 [73.25]	250,000 [73.25]	250,000 [73.25]	250,000 [73.25]
EER/SEER[2]	10.5/NA	10.5/NA	10.5/NA	10.5/NA
Nominal CFM/AHRI Rated CFM [L/s]	8000/7825 [3775/3693]	8000/7825 [3775/3693]	8000/7825 [3775/3693]	8000/7825 [3775/3693]
AHRI Net Cooling Capacity Btu [kW]	240,000 [70.32]	240,000 [70.32]	240,000 [70.32]	240,000 [70.32]
Net Sensible Capacity Btu [kW]	175,000 [51.27]	175,000 [51.27]	175,000 [51.27]	175,000 [51.27]
Net Latent Capacity Btu [kW]	65,000 [19.04]	65,000 [19.04]	65,000 [19.04]	65,000 [19.04]
IEER[3]	10.5	10.5	10.5	10.5
Net System Power kW	22.88	22.88	22.88	22.88
Heating Performance (Gas)[4]				
Heating Input Btu [kW] (1st Stage / 2nd Stage)	150,000/300,000 [43.95/87.9]	200,000/400,000 [58.6/117.2]	150,000/300,000 [43.95/87.9]	200,000/400,000 [58.6/117.2]
Heating Output Btu [kW] (1st Stage / 2nd Stage)	121,500/243,000 [35.6/71.2]	162,000/324,000 [47.47/94.93]	121,500/243,000 [35.6/71.2]	162,000/324,000 [47.47/94.93]
Temperature Rise Range °F [°C] (1st Stage / 2nd Stage)	15-45 [8.3-25] / 15-45 [8.3-25]	25-55 [13.9-30.6] / 25-55 [13.9-30.6]	15-45 [8.3-25] / 15-45 [8.3-25]	25-55 [13.9-30.6] / 25-55 [13.9-30.6]
Steady State Efficiency (%)	81	81	81	81
No. Burners	12	14	12	14
No. Stages	2	2	2	2
Gas Connection Pipe Size in. [mm]	0.75 [19]	0.75 [19]	0.75 [19]	0.75 [19]
Compressor				
No./Type	2/Scroll	2/Scroll	2/Scroll	2/Scroll
Outdoor Sound Rating (dB)[5]	91	91	91	91
Outdoor Coil—Fin Type	Louvered	Louvered	Louvered	Louvered
Tube Type	MicroChannel	MicroChannel	MicroChannel	MicroChannel
MicroChannel Depth in. [mm]	1 [25.4]	1 [25.4]	1 [25.4]	1 [25.4]
Face Area sq. ft. [sq. m]	50.8 [4.72]	50.8 [4.72]	50.8 [4.72]	50.8 [4.72]
Rows / FPI [FPcm]	1 / 23 [9]	1 / 23 [9]	1 / 23 [9]	1 / 23 [9]
Indoor Coil—Fin Type	Louvered	Louvered	Louvered	Louvered
Tube Type	Rifled	Rifled	Rifled	Rifled
Tube Size in. [mm]	0.375 [9.5]	0.375 [9.5]	0.375 [9.5]	0.375 [9.5]
Face Area sq. ft. [sq. m]	26.67 [2.48]	26.67 [2.48]	26.67 [2.48]	26.67 [2.48]
Rows / FPI [FPcm]	3 / 13 [5]	3 / 13 [5]	3 / 13 [5]	3 / 13 [5]
Refrigerant Control	Capillary Tubes	Capillary Tubes	Capillary Tubes	Capillary Tubes
Drain Connection No./Size in. [mm]	1/1 [25.4]	1/1 [25.4]	1/1 [25.4]	1/1 [25.4]
Outdoor Fan—Type	Propeller	Propeller	Propeller	Propeller
No. Used/Diameter in. [mm]	3/24 [609.6]	3/24 [609.6]	3/24 [609.6]	3/24 [609.6]
Drive Type/No. Speeds	Direct/1	Direct/1	Direct/1	Direct/1
CFM [L/s]	10000 [4719]	10000 [4719]	10000 [4719]	10000 [4719]
No. Motors/HP	3 at 1/2 HP	3 at 1/2 HP	3 at 1/2 HP	3 at 1/2 HP
Motor RPM	1075	1075	1075	1075
Indoor Fan—Type	FC Centrifugal	FC Centrifugal	FC Centrifugal	FC Centrifugal
No. Used/Diameter in. [mm]	2/18x9 [457x229]	2/18x9 [457x229]	2/18x9 [457x229]	2/18x9 [457x229]
Drive Type/No. Speeds	Belt/Variable	Belt/Variable	Belt/Variable	Belt/Variable
No. Motors	1	1	1	1
Motor HP	7 1/2	7 1/2	7 1/2	7 1/2
Motor RPM	1725	1725	1725	1725
Motor Frame Size	213	213	213	213
Filter—Type	Disposable	Disposable	Disposable	Disposable
Furnished	Yes	Yes	Yes	Yes
(NO.) Size Recommended in. [mm x mm x mm]	(8)2x25x20 [51x635x508]	(8)2x25x20 [51x635x508]	(8)2x25x20 [51x635x508]	(8)2x25x20 [51x635x508]
Refrigerant Charge Oz. (Sys. 1/Sys. 2) [g]	200/219 [5670/6209]	200/219 [5670/6209]	200/219 [5670/6209]	200/219 [5670/6209]
Weights				
Net Weights lbs. [kg]	2059 [934]	2073 [940]	2057 [933]	2072 [940]
Ship Weights lbs. [kg]	2185 [991]	2200 [998]	2184 [991]	2198 [997]

NOTES:

1. Cooling Performance is rated at 95° F ambient, 80° F entering dry bulb, 67° F entering wet bulb. Gross capacity does not include the effect of fan motor heat. AHRI capacity is net and includes the effect of fan motor heat. Units are suitable for operation to 20% of nominal cfm. Units are certified in accordance with the Unitary Air Conditioner Equipment certification program, which is based on AHRI Standard 210/240 or 360.
2. EER and/or SEER are rated at AHRI conditions and in accordance with DOE test procedures.
3. IEER is rated in accordance with AHRI standard 340/360.
4. Heating Performance limit settings and rating data were established and approved under laboratory test conditions using American National Standard Institute standards. Ratings shown are for elevations up to 2000 feet. For elevations above 2000 feet, ratings should be reduced at the rate of 4% for each 1000 feet above sea level.
5. Outdoor Sound Rating shown is tested in accordance with AHRI Standard 270.

GENERAL DATA - RKKL

Model RKKL-Series	B240DL30E	B240DL40E	B240DM30E	B240DM40E
Cooling Performance[1]				CONTINUED →
Gross Cooling Capacity Btu [kW]	250,000 [73.25]	250,000 [73.25]	250,000 [73.25]	250,000 [73.25]
EER/SEER[2]	10.5/NA	10.5/NA	10.5/NA	10.5/NA
Nominal CFM/AHRI Rated CFM [L/s]	8000/7825 [3775/3693]	8000/7825 [3775/3693]	8000/7825 [3775/3693]	8000/7825 [3775/3693]
AHRI Net Cooling Capacity Btu [kW]	240,000 [70.32]	240,000 [70.32]	240,000 [70.32]	240,000 [70.32]
Net Sensible Capacity Btu [kW]	175,000 [51.27]	175,000 [51.27]	175,000 [51.27]	175,000 [51.27]
Net Latent Capacity Btu [kW]	65,000 [19.04]	65,000 [19.04]	65,000 [19.04]	65,000 [19.04]
IEER[3]	10.5	10.5	10.5	10.5
Net System Power kW	22.88	22.88	22.88	22.88
Heating Performance (Gas)[4]				
Heating Input Btu [kW] (1st Stage / 2nd Stage)	150,000/300,000 [43.95/87.9]	200,000/400,000 [58.6/117.2]	150,000/300,000 [43.95/87.9]	200,000/400,000 [58.6/117.2]
Heating Output Btu [kW] (1st Stage / 2nd Stage)	121,500/243,000 [35.6/71.2]	162,000/324,000 [47.47/94.93]	121,500/243,000 [35.6/71.2]	162,000/324,000 [47.47/94.93]
Temperature Rise Range ºF [°C] (1st Stage / 2nd Stage)	15-45 [8.3-25] / 15-45 [8.3-25]	25-55 [13.9-30.6] / 25-55 [13.9-30.6]	15-45 [8.3-25] / 15-45 [8.3-25]	25-55 [13.9-30.6] / 25-55 [13.9-30.6]
Steady State Efficiency (%)	81	81	81	81
No. Burners	12	14	12	14
No. Stages	2	2	2	2
Gas Connection Pipe Size in. [mm]	0.75 [19]	0.75 [19]	0.75 [19]	0.75 [19]
Compressor				
No./Type	2/Scroll	2/Scroll	2/Scroll	2/Scroll
Outdoor Sound Rating (dB)[5]	91	91	91	91
Outdoor Coil—Fin Type	Louvered	Louvered	Louvered	Louvered
Tube Type	MicroChannel	MicroChannel	MicroChannel	MicroChannel
MicroChannel Depth in. [mm]	1 [25.4]	1 [25.4]	1 [25.4]	1 [25.4]
Face Area sq. ft. [sq. m]	50.8 [4.72]	50.8 [4.72]	50.8 [4.72]	50.8 [4.72]
Rows / FPI [FPcm]	1 / 23 [9]	1 / 23 [9]	1 / 23 [9]	1 / 23 [9]
Indoor Coil—Fin Type	Louvered	Louvered	Louvered	Louvered
Tube Type	Rifled	Rifled	Rifled	Rifled
Tube Size in. [mm]	0.375 [9.5]	0.375 [9.5]	0.375 [9.5]	0.375 [9.5]
Face Area sq. ft. [sq. m]	26.67 [2.48]	26.67 [2.48]	26.67 [2.48]	26.67 [2.48]
Rows / FPI [FPcm]	3 / 13 [5]	3 / 13 [5]	3 / 13 [5]	3 / 13 [5]
Refrigerant Control	Capillary Tubes	Capillary Tubes	Capillary Tubes	Capillary Tubes
Drain Connection No./Size in. [mm]	1/1 [25.4]	1/1 [25.4]	1/1 [25.4]	1/1 [25.4]
Outdoor Fan—Type	Propeller	Propeller	Propeller	Propeller
No. Used/Diameter in. [mm]	3/24 [609.6]	3/24 [609.6]	3/24 [609.6]	3/24 [609.6]
Drive Type/No. Speeds	Direct/1	Direct/1	Direct/1	Direct/1
CFM [L/s]	10000 [4719]	10000 [4719]	10000 [4719]	10000 [4719]
No. Motors/HP	3 at 1/2 HP	3 at 1/2 HP	3 at 1/2 HP	3 at 1/2 HP
Motor RPM	1075	1075	1075	1075
Indoor Fan—Type	FC Centrifugal	FC Centrifugal	FC Centrifugal	FC Centrifugal
No. Used/Diameter in. [mm]	2/18x9 [457x229]	2/18x9 [457x229]	2/18x9 [457x229]	2/18x9 [457x229]
Drive Type/No. Speeds	Belt/Variable	Belt/Variable	Belt/Variable	Belt/Variable
No. Motors	1	1	1	1
Motor HP	5	5	7 1/2	7 1/2
Motor RPM	1725	1725	1725	1725
Motor Frame Size	184	184	184	213
Filter—Type	Disposable	Disposable	Disposable	Disposable
Furnished	Yes	Yes	Yes	Yes
(NO.) Size Recommended in. [mm x mm x mm]	(8)2x25x20 [51x635x508]	(8)2x25x20 [51x635x508]	(8)2x25x20 [51x635x508]	(8)2x25x20 [51x635x508]
Refrigerant Charge Oz. (Sys. 1/Sys. 2) [g]	200/219 [5670/6209]	200/219 [5670/6209]	200/219 [5670/6209]	200/219 [5670/6209]
Weights				
Net Weights lbs. [kg]	2021 [917]	2073 [940]	2059 [934]	2073 [940]
Ship Weights lbs. [kg]	2147 [974]	2200 [998]	2185 [991]	2200 [998]

NOTES:

1. Cooling Performance is rated at 95° F ambient, 80° F entering dry bulb, 67° F entering wet bulb. Gross capacity does not include the effect of fan motor heat. AHRI capacity is net and includes the effect of fan motor heat. Units are suitable for operation to 20% of nominal cfm. Units are certified in accordance with the Unitary Air Conditioner Equipment certification program, which is based on AHRI Standard 210/240 or 360.
2. EER and/or SEER are rated at AHRI conditions and in accordance with DOE test procedures.
3. IEER is rated in accordance with AHRI standard 340/360.
4. Heating Performance limit settings and rating data were established and approved under laboratory test conditions using American National Standard Institute standards. Ratings shown are for elevations up to 2000 feet. For elevations above 2000 feet, ratings should be reduced at the rate of 4% for each 1000 feet above sea level.
5. Outdoor Sound Rating shown is tested in accordance with AHRI Standard 270.

GENERAL DATA - RKKL

Model RKKL-Series	B240DN30E	B240DN40E	B240YL40E	B240YM40E
Cooling Performance[1]				CONTINUED →
Gross Cooling Capacity Btu [kW]	250,000 [73.25]	250,000 [73.25]	250,000 [73.25]	250,000 [73.25]
EER/SEER[2]	10.5/NA	10.5/NA	10.5/NA	10.5/NA
Nominal CFM/AHRI Rated CFM [L/s]	8000/7825 [3775/3693]	8000/7825 [3775/3693]	8000/7825 [3775/3693]	8000/7825 [3775/3693]
AHRI Net Cooling Capacity Btu [kW]	240,000 [70.32]	240,000 [70.32]	240,000 [70.32]	240,000 [70.32]
Net Sensible Capacity Btu [kW]	175,000 [51.27]	175,000 [51.27]	175,000 [51.27]	175,000 [51.27]
Net Latent Capacity Btu [kW]	65,000 [19.04]	65,000 [19.04]	65,000 [19.04]	65,000 [19.04]
IEER[3]	10.5	10.5	10.5	10.5
Net System Power kW	22.88	22.88	22.88	22.88
Heating Performance (Gas)[4]				
Heating Input Btu [kW] (1st Stage / 2nd Stage)	150,000/300,000 [43.95/87.9]	200,000/400,000 [58.6/117.2]	200,000/400,000 [58.6/117.2]	200,000/400,000 [58.6/117.2]
Heating Output Btu [kW] (1st Stage / 2nd Stage)	121,500/243,000 [35.6/71.2]	162,000/324,000 [47.47/94.93]	162,000/324,000 [47.47/94.93]	162,000/324,000 [47.47/94.93]
Temperature Rise Range °F [°C] (1st Stage / 2nd Stage)	15-45 [8.3-25] / 15-45 [8.3-25]	25-55 [13.9-30.6] / 25-55 [13.9-30.6]	25-55 [13.9-30.6] / 25-55 [13.9-30.6]	25-55 [13.9-30.6] / 25-55 [13.9-30.6]
Steady State Efficiency (%)	81	81	81	81
No. Burners	12	14	14	14
No. Stages	2	2	2	2
Gas Connection Pipe Size in. [mm]	0.75 [19]	0.75 [19]	0.75 [19]	0.75 [19]
Compressor				
No./Type	2/Scroll	2/Scroll	2/Scroll	2/Scroll
Outdoor Sound Rating (dB)[5]	91	91	91	91
Outdoor Coil—Fin Type	Louvered	Louvered	Louvered	Louvered
Tube Type	MicroChannel	MicroChannel	MicroChannel	MicroChannel
MicroChannel Depth in. [mm]	1 [25.4]	1 [25.4]	1 [25.4]	1 [25.4]
Face Area sq. ft. [sq. m]	50.8 [4.72]	50.8 [4.72]	50.8 [4.72]	50.8 [4.72]
Rows / FPI [FPcm]	1 / 23 [9]	1 / 23 [9]	1 / 23 [9]	1 / 23 [9]
Indoor Coil—Fin Type	Louvered	Louvered	Louvered	Louvered
Tube Type	Rifled	Rifled	Rifled	Rifled
Tube Size in. [mm]	0.375 [9.5]	0.375 [9.5]	0.375 [9.5]	0.375 [9.5]
Face Area sq. ft. [sq. m]	26.67 [2.48]	26.67 [2.48]	26.67 [2.48]	26.67 [2.48]
Rows / FPI [FPcm]	3 / 13 [5]	3 / 13 [5]	3 / 13 [5]	3 / 13 [5]
Refrigerant Control	Capillary Tubes	Capillary Tubes	Capillary Tubes	Capillary Tubes
Drain Connection No./Size in. [mm]	1/1 [25.4]	1/1 [25.4]	1/1 [25.4]	1/1 [25.4]
Outdoor Fan—Type	Propeller	Propeller	Propeller	Propeller
No. Used/Diameter in. [mm]	3/24 [609.6]	3/24 [609.6]	3/24 [609.6]	3/24 [609.6]
Drive Type/No. Speeds	Direct/1	Direct/1	Direct/1	Direct/1
CFM [L/s]	10000 [4719]	10000 [4719]	10000 [4719]	10000 [4719]
No. Motors/HP	3 at 1/2 HP	3 at 1/2 HP	3 at 1/2 HP	3 at 1/2 HP
Motor RPM	1075	1075	1075	1075
Indoor Fan—Type	FC Centrifugal	FC Centrifugal	FC Centrifugal	FC Centrifugal
No. Used/Diameter in. [mm]	2/18x9 [457x229]	2/18x9 [457x229]	2/18x9 [457x229]	2/18x9 [457x229]
Drive Type/No. Speeds	Belt/Variable	Belt/Variable	Belt/Variable	Belt/Variable
No. Motors	1	1	1	1
Motor HP	7 1/2	7 1/2	5	7 1/2
Motor RPM	1725	1725	1725	1725
Motor Frame Size	184	213	184	213
Filter—Type	Disposable	Disposable	Disposable	Disposable
Furnished	Yes	Yes	Yes	Yes
(NO.) Size Recommended in. [mm x mm x mm]	(8)2x25x20 [51x635x508]	(8)2x25x20 [51x635x508]	(8)2x25x20 [51x635x508]	(8)2x25x20 [51x635x508]
Refrigerant Charge Oz. (Sys. 1/Sys. 2) [g]	200/219 [5670/6209]	200/219 [5670/6209]	200/219 [5670/6209]	200/219 [5670/6209]
Weights				
Net Weights lbs. [kg]	2057 [933]	2072 [940]	2055 [932]	2093 [949]
Ship Weights lbs. [kg]	2184 [991]	2198 [997]	2182 [990]	2220 [1007]

NOTES:

1. Cooling Performance is rated at 95° F ambient, 80° F entering dry bulb, 67° F entering wet bulb. Gross capacity does not include the effect of fan motor heat. AHRI capacity is net and includes the effect of fan motor heat. Units are suitable for operation to 20% of nominal cfm. Units are certified in accordance with the Unitary Air Conditioner Equipment certification program, which is based on AHRI Standard 210/240 or 360.
2. EER and/or SEER are rated at AHRI conditions and in accordance with DOE test procedures.
3. IEER is rated in accordance with AHRI standard 340/360.
4. Heating Performance limit settings and rating data were established and approved under laboratory test conditions using American National Standard Institute standards. Ratings shown are for elevations up to 2000 feet. For elevations above 2000 feet, ratings should be reduced at the rate of 4% for each 1000 feet above sea level.
5. Outdoor Sound Rating shown is tested in accordance with AHRI Standard 270.

GENERAL DATA - RKKL

Model RKKL-Series	B240YN40E
Cooling Performance[1]	
Gross Cooling Capacity Btu [kW]	250,000 [73.25]
EER/SEER[2]	10.5/NA
Nominal CFM/AHRI Rated CFM [L/s]	8000/7825 [3775/3693]
AHRI Net Cooling Capacity Btu [kW]	240,000 [70.32]
Net Sensible Capacity Btu [kW]	175,000 [51.27]
Net Latent Capacity Btu [kW]	65,000 [19.04]
IEER[3]	10.5
Net System Power kW	22.88
Heating Performance (Gas)[4]	
Heating Input Btu [kW] (1st Stage / 2nd Stage)	200,000/400,000 [58.6/117.2]
Heating Output Btu [kW] (1st Stage / 2nd Stage)	162,000/324,000 [47.47/94.93]
Temperature Rise Range ºF [°C] (1st Stage / 2nd Stage)	25-55 [13.9-30.6] / 25-55 [13.9-30.6]
Steady State Efficiency (%)	81
No. Burners	14
No. Stages	2
Gas Connection Pipe Size in. [mm]	0.75 [19]
Compressor	
No./Type	2/Scroll
Outdoor Sound Rating (dB)[5]	91
Outdoor Coil—Fin Type	Louvered
Tube Type	MicroChannel
MicroChannel Depth in. [mm]	1 [25.4]
Face Area sq. ft. [sq. m]	50.8 [4.72]
Rows / FPI [FPcm]	1 / 23 [9]
Indoor Coil—Fin Type	Louvered
Tube Type	Rifled
Tube Size in. [mm]	0.375 [9.5]
Face Area sq. ft. [sq. m]	26.67 [2.48]
Rows / FPI [FPcm]	3 / 13 [5]
Refrigerant Control	Capillary Tubes
Drain Connection No./Size in. [mm]	1/1 [25.4]
Outdoor Fan—Type	Propeller
No. Used/Diameter in. [mm]	3/24 [609.6]
Drive Type/No. Speeds	Direct/1
CFM [L/s]	10000 [4719]
No. Motors/HP	3 at 1/2 HP
Motor RPM	1075
Indoor Fan—Type	FC Centrifugal
No. Used/Diameter in. [mm]	2/18x9 [457x229]
Drive Type/No. Speeds	Belt/Variable
No. Motors	1
Motor HP	7 1/2
Motor RPM	1725
Motor Frame Size	213
Filter—Type	Disposable
Furnished	Yes
(NO.) Size Recommended in. [mm x mm x mm]	(8)2x25x20 [51x635x508]
Refrigerant Charge Oz. (Sys. 1/Sys. 2) [g]	200/219 [5670/6209]
Weights	
Net Weights lbs. [kg]	2092 [949]
Ship Weights lbs. [kg]	2218 [1006]

NOTES:

1. Cooling Performance is rated at 95° F ambient, 80° F entering dry bulb, 67° F entering wet bulb. Gross capacity does not include the effect of fan motor heat. AHRI capacity is net and includes the effect of fan motor heat. Units are suitable for operation to 20% of nominal cfm. Units are certified in accordance with the Unitary Air Conditioner Equipment certification program, which is based on AHRI Standard 210/240 or 360.
2. EER and/or SEER are rated at AHRI conditions and in accordance with DOE test procedures.
3. IEER is rated in accordance with AHRI standard 340/360.
4. Heating Performance limit settings and rating data were established and approved under laboratory test conditions using American National Standard Institute standards. Ratings shown are for elevations up to 2000 feet. For elevations above 2000 feet, ratings should be reduced at the rate of 4% for each 1000 feet above sea level.
5. Outdoor Sound Rating shown is tested in accordance with AHRI Standard 270.

II. INSTALLATION

A. GENERAL

1. INSTALLATION — Install this unit in accordance with The American National Standard Z223.1-latest edition booklet entitled “National Fuel Gas Code,” and the requirements or codes of the local utility or other authority having jurisdiction.

   Additional helpful publications available from the “National Fire Protection Association” are: NFPA-90A - Installation of Air Conditioning and Ventilating Systems 1985 or latest edition. NFPA-90B - Warm Air Heating and Air Conditioning Systems 1984.

   These publications are available from:

   National Fire Protection
   Association, Inc.
   1 Batterymarch Park
   Quincy, MA 02269-7471
   www.nfpa.org

2. PRE-INSTALLATION CHECK-POINTS — Before attempting any installation, carefully consider the following points:

   Structural strength of supporting members
   (Rooftop Installation)
   Clearances and provision for servicing
   Power supply and wiring
   Gas supply and piping
   Air duct connections and sizing
   Drain facilities and connections
   Location for minimum noise and
   vibration - away from bedroom
   windows

IMPORTANT: Before operating unit, remove compressor shipping supports from the compressor base. Failure to remove supports will cause noise and vibration.

LOCATION CONSIDERATIONS

The metal parts of this unit may be subject to rust or deterioration in adverse environmental conditions. This oxidation could shorten the equipment’s useful life. Salt spray, fog or mist in seacoast areas, sulphur or chlorine from lawn watering systems, and various chemical contaminants from industries such as paper mills and petroleum refineries are especially corrosive.

If the unit is to be installed in an area where contaminants are likely to be a problem, give special attention to the equipment location and exposure.

1. Avoid having lawn sprinkler heads spray directly on the unit cabinet.
2. In coastal areas locate the unit on the side of the building away from the waterfront.
3. Shielding by a fence or shrubs may give some protection.
4. Frequent washing of the cabinet, fan blade and coil with fresh water will remove most of the salt or other contaminants that build up on the unit.
5. Regular cleaning and waxing of the cabinet with an automobile polish will provide some protection.
6. A liquid cleaner may be used several times a year to remove matter that will not wash off with water.

Several different types of protective coatings are offered in some areas. These coatings may provide some benefit, but the effectiveness of such coating materials cannot be verified by the equipment manufacturer.

The best protection is frequent cleaning, maintenance and minimal exposure to contaminants.

⚠ WARNING

DISCONNECT ALL POWER TO UNIT BEFORE STARTING MAINTENANCE. FAILURE TO DO SO CAN CAUSE ELECTRICAL SHOCK RESULTING IN PERSONAL INJURY OR DEATH. REGULAR MAINTENANCE WILL REDUCE THE BUILDUP OF CONTAMINANTS AND HELP TO PROTECT THE UNIT’S FINISH.

⚠ WARNING

THESE UNITS ARE DESIGNED CERTIFIED FOR OUTDOOR INSTALLATION ONLY. INSTALLATION INSIDE ANY PART OF A STRUCTURE CAN RESULT IN INADEQUATE UNIT PERFORMANCE AS WELL AS PROPERTY DAMAGE. INSTALLATION INSIDE CAN ALSO CAUSE RECIRCULATION OF FLUE PRODUCTS INTO THE CONDITIONED SPACE RESULTING IN PERSONAL INJURY OR DEATH.

B. OUTSIDE INSTALLATION

(Typical outdoor slab installation is shown in Figure 9.)

1. Select a location where external water drainage cannot collect around unit.
2. Provide a level slab sufficiently high enough above grade to prevent surface water from entering the unit
3. Locate the unit to provide proper access for inspection and servicing as shown in Figure 12.
4. Locate unit where operating sounds will not disturb owner or neighbors.
5. Locate unit so roof runoff water does not pour directly on the unit. Provide gutter or other shielding at roof level. Do not locate unit in an area where excessive snow drifting may occur or accumulate.
6. Where snowfall is anticipated, the height of the unit above the ground level must be considered. Mount unit high enough to be above anticipated maximum area snowfall and to allow combustion air to enter the combustion air inlet.
7. Select an area which will keep the areas of the vent, air intake, and A/C condenser fins free and clear of obstructions such as weeds, shrubs, vines, snow, etc. Inform the user accordingly.

C. ATTACHING EXHAUST AND COMBUSTION AIR INLET HOODS

IMPORTANT: Do not operate this unit without the exhaust/combustion air inlet hood properly installed. These hoods are shipped in cartons in the blower compartment inside the unit and must be attached when the unit is installed. See Figure 4.

To attach exhaust/combustion air inlet hood:

1. Open blower access panel. For location of blower access panel, see Figure 3.
2. Remove exhaust/combustion air inlet hoods from the cartons, located inside the blower compartment.
3. Attach blower access panel.
4. Attach the combustion air inlet/exhaust hoods with screws. Reference Figure 4 for proper location. Screws are in carton with the hood.
5. Vent the unit using the flue exhaust hood, as supplied from the factory, without alteration or addition.

FIGURE 9
OUTSIDE SLAB INSTALLATION. CLOSET DISTRIBUTION SYSTEM. SLAB FLOOR CONSTRUCTION

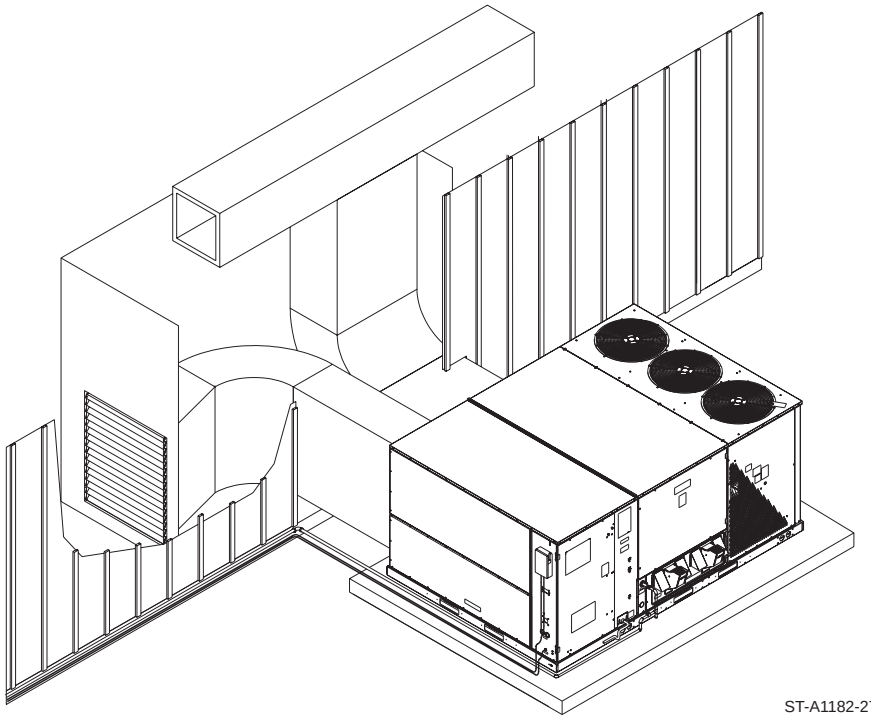

D. COVER PANEL INSTALLATION / CONVERSION PROCEDURE

DOWNFLOW TO HORIZONTAL

1. Remove the screws and covers from the outside of the supply and return sections. See Figure 7.
2. Install the covers over the bottom supply and return openings, painted side up, inserting the ***leading flange under the bracket provided.*** Place the ***back flange to top of the front bracket provided.*** See Figures 10 and 11.
3. Secure the return and supply cover to front bracket with two (2) screws.

E. FILTER REPLACEMENT

This unit is provided with 8 – 20” X 25” x 2” disposable filters. When replacing filters, ensure they are inserted fully to the back to prevent bypass. See Figure 5.

Recommended supplier of this filter is Glassfloss Industries, Inc. or

AAF International
215 Central Avenue
P.O. Box 35690
Louisville, KY 40232
Phone: 1-800-501-3146
Part #: 54-42541-04 (20" x 25" x 2")

FIGURE 10
HORIZONTAL CONVERSION DETAIL

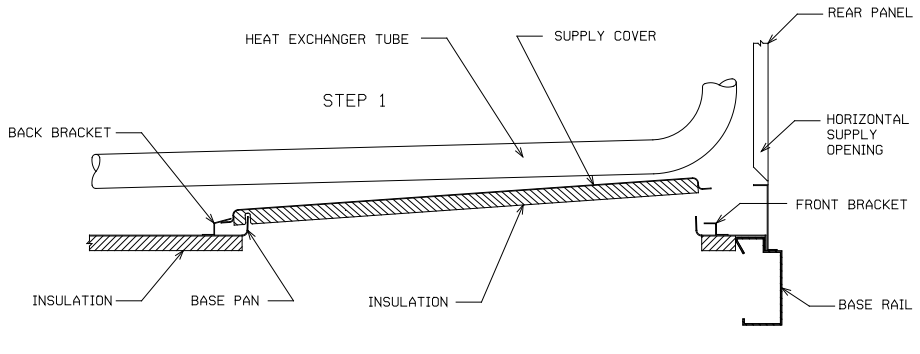

FIGURE 11
HORIZONTAL CONVERSION DETAIL

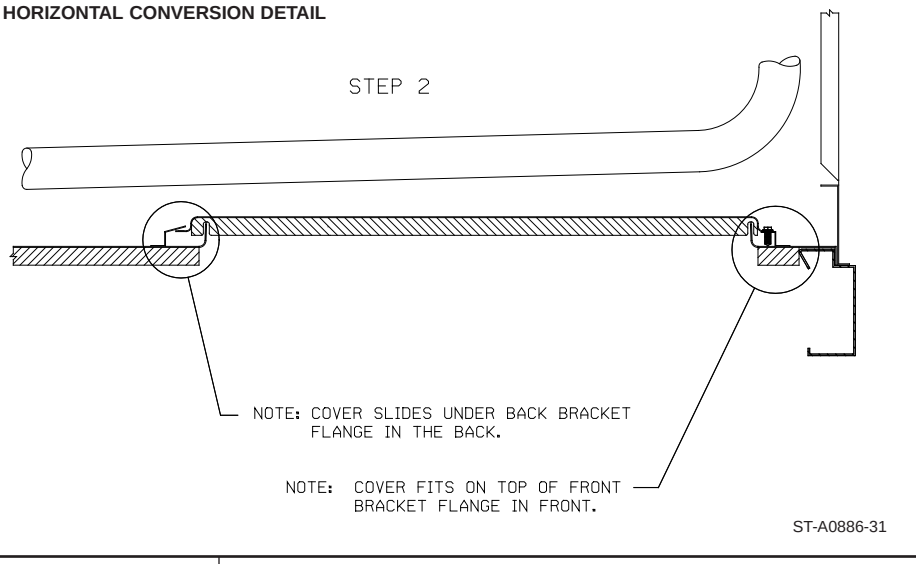

E. CLEARANCES

The following minimum clearances must be observed for proper unit performance and serviceability. Reference Figure 12.

FIGURE 12
CLEARANCES

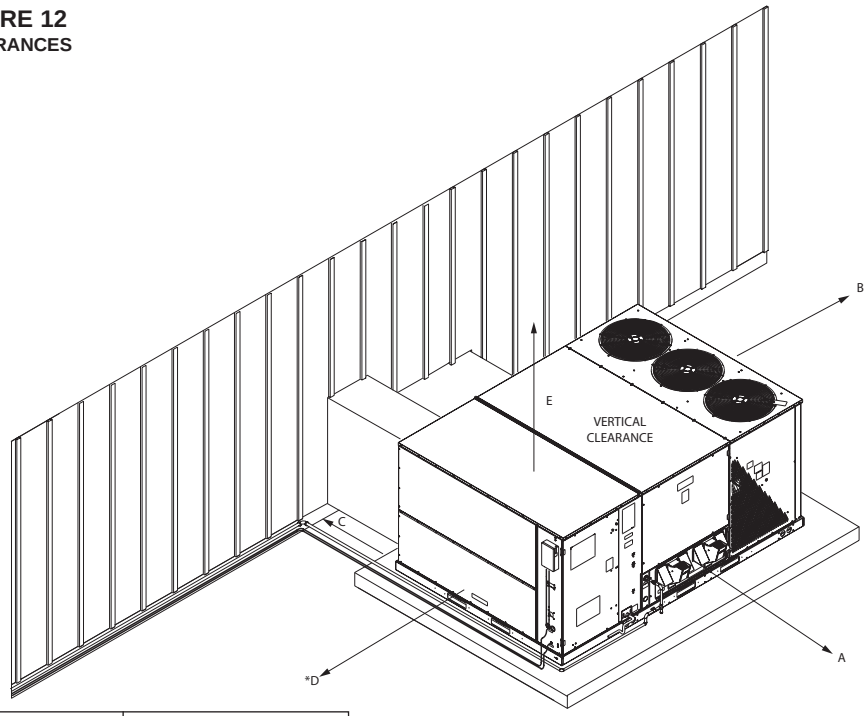

RECOMMENDED CLEARANCE	LOCATION
80”	A – FRONT
18”	B – CONDENSER COIL
18”/42”	+C – DUCT SIDE
18”/48”	*D – EVAPORATOR END
18”	E – ABOVE
* WITHOUT ECONOMIZER/48” WITH ECONOMIZER	

+ WITHOUT HORIZONTAL ECONOMIZER/42” WITH HORIZONTAL ECONOMIZER

ST-A1128-28-00

FIGURE 13A
FLAT ROOFTOP INSTALLATION, ATTIC OR DROP CEILING DISTRIBUTING SYSTEM. MOUNTED ON ROOFCURB. CURB MUST BE LEVEL.

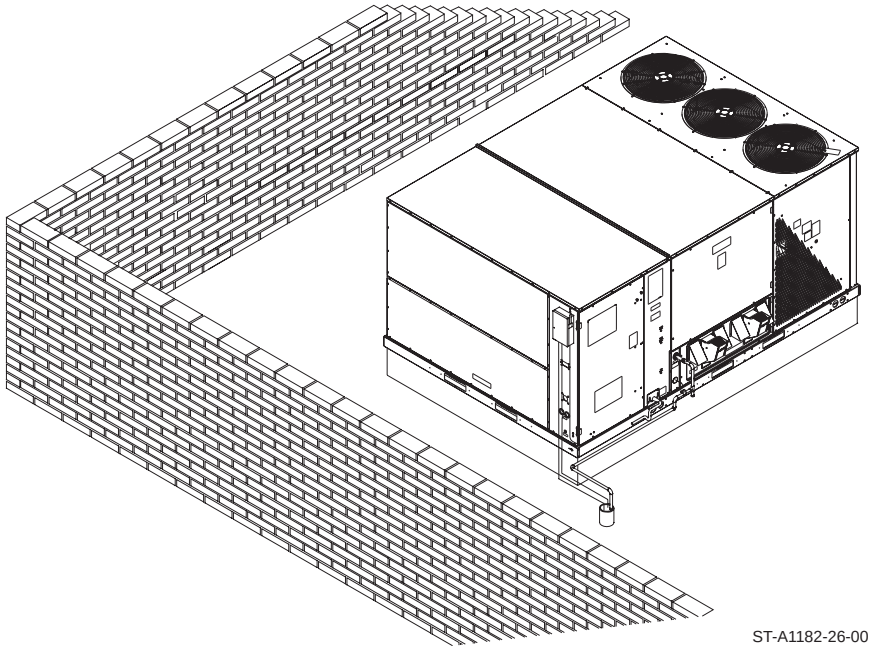

ST-A1182-26-00

G. ROOFTOP INSTALLATION

1. Before locating the unit on the roof, make sure that the roof structure is adequate to support the weight involved. (See Electrical & Physical Tables in this manual.) **THIS IS VERY IMPORTANT AND THE INSTALLER'S RESPONSIBILITY.**
2. For rigging and roofcurb details, see Figures 14, 15 and 16.
3. The location of the unit on the roof should be such as to provide proper access for inspection and servicing.

IMPORTANT: *If unit will not be put into service immediately, block off supply and return air openings to prevent excessive condensation.*

H. DUCTING

The installing contractor should fabricate ductwork in accordance with local codes. Use industry manuals as a guide when sizing and designing the duct system. Contact Air Conditioning Contractors of America, 2800 Shirlington Road, Suite 300, Arlington, VA 22206, http:/www.acca.org.

Place the unit as close to the conditioned space as possible allowing clearances as indicated. Run ducts as directly as possible to supply and return outlets. Use of non-flammable weatherproof flexible connectors on both supply and return connections at unit to reduce noise transmission is recommended.

On ductwork exposed to outside temperature and humidity, use a minimum of 2" of insulation and a vapor barrier. Distribution system in attic, furred space or crawl space should be insulated with at least 2" of insulation. ½" to 1" thick insulation is usually sufficient for ductwork inside the air conditioned space.

Provide balancing dampers for each branch duct in the supply system. Properly support ductwork from the structure.

IMPORTANT: In the event that the return air ducts must be run through an "unconfined" space containing other fuel burning equipment, it is imperative that the user/building owner must be informed against future changes in construction which might change this to a "confined space." Also, caution the user/building owner against any future installation of additional equipment (such as power ventilators, clothes dryers, etc.), within the existing unconfined and/or confined space which might create a negative pressure within the vicinity of other solid, liquid, or gas fueled appliances.

⚠ WARNING

DO NOT, UNDER ANY CIRCUMSTANCES, CONNECT RETURN DUCTWORK TO ANY OTHER HEAT PRODUCING DEVICE SUCH AS FIREPLACE INSERT, STOVE, ETC. UNAUTHORIZED USE OF SUCH DEVICES MAY RESULT IN FIRE, CARBON MONOXIDE POISONING, EXPLOSION, PERSONAL INJURY, PROPERTY DAMAGE OR DEATH.

FIGURE 13B
FLAT ROOFTOP INSTALLATION, ATTIC OR DROP CEILING DISTRIBUTING SYSTEM. MOUNTED ON ROOFCURB. CURB MUST BE LEVEL.

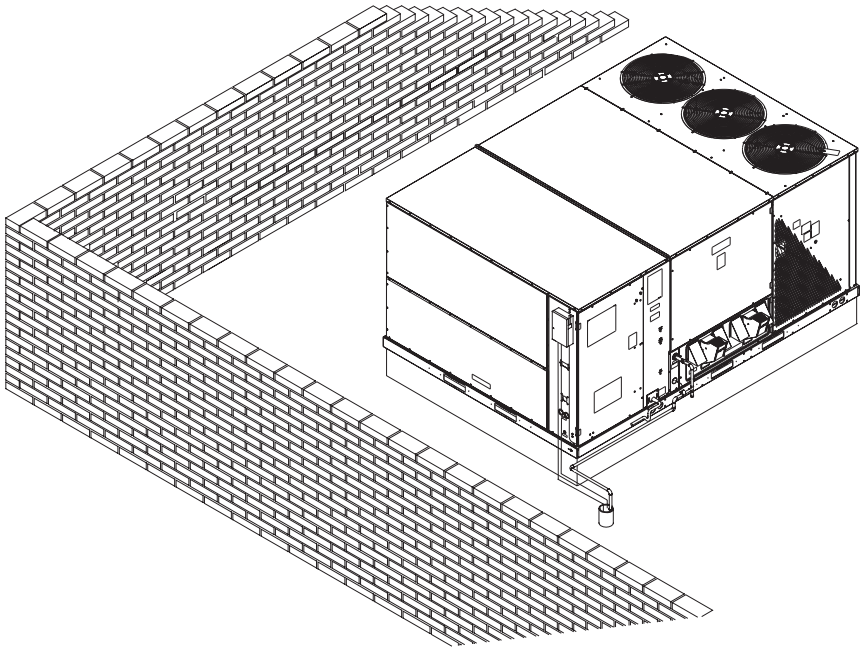

ST-A1182-26-00

RETURN AIR

⚠ WARNING

NEVER ALLOW PRODUCTS OF COMBUSTION OR THE FLUE PRODUCTS TO ENTER THE RETURN AIR DUCTWORK, OR THE CIRCULATING AIR SUPPLY. ALL RETURN DUCTWORK MUST BE ADEQUATELY SEALED AND SECURED TO THE FURNACE WITH SHEET METAL SCREWS, AND JOINTS TAPED. ALL OTHER DUCT JOINTS MUST BE SECURED WITH APPROVED CONNECTIONS AND SEALED AIRTIGHT.

FAILURE TO PREVENT PRODUCTS OF COMBUSTION FROM BEING CIRCULATED INTO THE LIVING SPACE CAN CREATE POTENTIALLY HAZARDOUS CONDITIONS, INCLUDING CARBON MONOXIDE POISONING THAT COULD RESULT IN PERSONAL INJURY OR DEATH.

FIGURE 14
LIFTING DETAIL

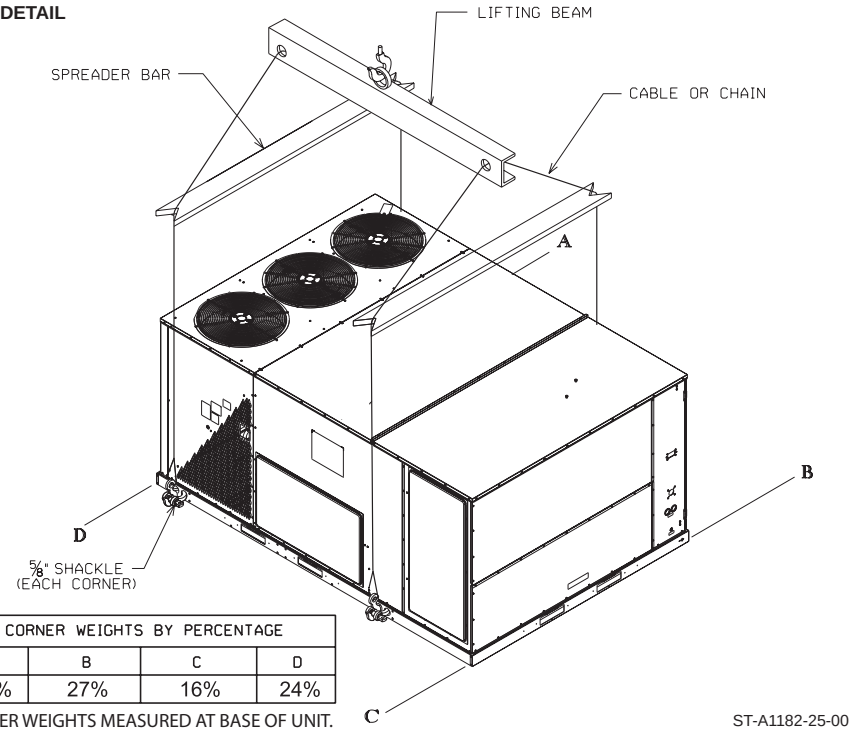

CORNER WEIGHTS BY PERCENTAGE			
A	B	C	D
32%	27%	16%	24%

CORNER WEIGHTS MEASURED AT BASE OF UNIT.

ST-A1182-25-00

FIGURE 15
ROOFCURB

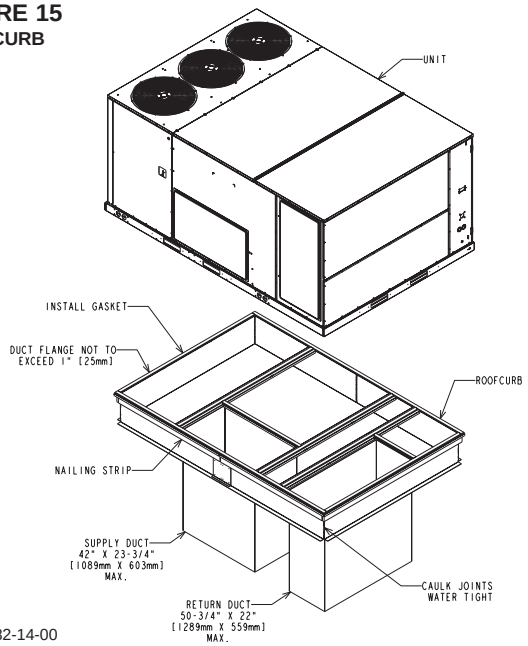

ST-A1182-14-00

FIGURE 16
ROOFCURB

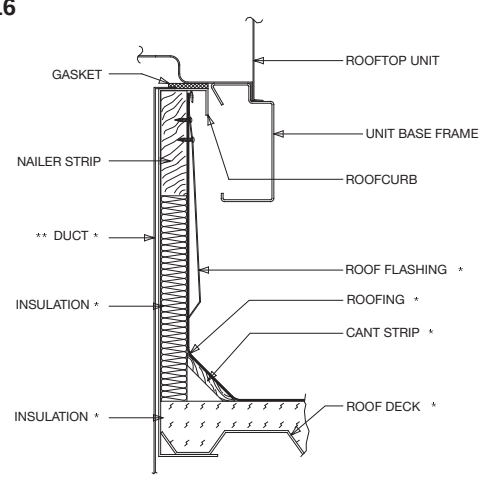

* BY CONTRACTOR

** FOR INSTALLATION OF DUCT AS SHOWN, USE RECOMMENDED DUCT SIZES FROM ROOFCURB INSTALLATION INSTRUCTIONS. FOR DUCT FLANGE ATTACHMENT TO UNIT, SEE UNIT INSTALLATION INSTRUCTIONS FOR RECOMMENDED DUCT SIZES.

ST-A0888-02

III. GAS SUPPLY, CONDENSATE DRAIN AND PIPING

A. GAS CONNECTION

IMPORTANT: Connect this unit only to gas supplied by a commercial utility.

1. Install gas piping in accordance with local codes and regulations of the local utility company. In the absence of local codes, the installation must conform to the specifications of the National Fuel Gas Code, ANSI Z223.1 - latest edition.

   NOTE: The use of flexible gas connectors is not permitted.
2. Connect the gas line to the gas valve supplied with unit. Routing can be through the gas pipe opening shown in Figures 9 or through the base as shown in Figure 21.
3. Size the gas line to the furnace adequate enough to prevent undue pressure drop. Do not use less than 1/2” pipes.
4. Install a drip leg or sediment trap in the gas supply line as close to the unit as possible.
5. Install an outside ground joint union to connect the gas supply to the control assembly at the burner tray.
6. Gas valves have been factory installed. Install a manual gas valve where local codes specify a shut-off valve outside the unit casing. (See Figure 17 and Figure 21.)
7. Make sure piping is tight. **A pipe compound resistant to the action of liquefied petroleum gases must be used at all threaded pipe connections.**
8. IMPORTANT: any additions, changes or conversions required for the furnace to satisfactorily meet the application should be made by a qualified installer, service agency or the gas supplier, using factory-specified or approved parts. In the commonwealth of Massachusetts, installation must be performed by a licensed plumber or gas fitter for appropriate fuel.

TABLE 1
GAS PIPE CAPACITY TABLE (CU. FT./HR. NATURAL GAS @ 0.30 IWC [INCHES OF WATER COLUMN] PRESSURE DROP)

Nominal Iron Pipe Size, Inches	Equivalent Length of Pipe, Feet							
	10	20	30	40	50	60	70	80
½	132	92	73	63	56	50	46	43
¾	278	190	152	130	115	105	96	90
1	520	350	285	245	215	195	180	170
1¼	1,050	730	590	500	440	400	370	350
1½	1,600	1,100	890	760	670	610	560	530

IMPORTANT: *Disconnect the furnace and its individual shutoff valve from the gas supply piping during any pressure testing of that system at test pressures in excess of 1/2 pound per square inch gauge or isolate the system from the gas supply piping system by closing its individual manual shutoff valve during any pressure testing of this gas supply system at pressures equal to or less than 1/2 PSIG.*

FIGURE 17
SUGGESTED GAS PIPING

ROOF OR GROUND LEVEL INSTALLATION

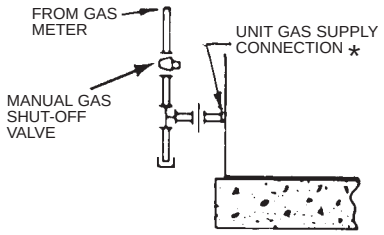

*Factory supplied grommet must be utilized.

⚠ WARNING

DO NOT USE AN OPEN FLAME TO CHECK FOR LEAKS. THE USE OF AN OPEN FLAME CAN RESULT IN FIRE, EXPLOSION, PROPERTY DAMAGE, PERSONAL INJURY OR DEATH.

TO CHECK FOR GAS LEAKS, USE A SOAP AND WATER SOLUTION OR OTHER APPROVED METHOD. DO NOT USE AN OPEN FLAME.

IMPORTANT: *Check the rating plate to make certain the appliance is equipped to burn the type of gas supplied. Care should be taken after installation of this equipment that the gas control valve not be subjected to high gas supply line pressure.*

In making gas connections, avoid strains as they may damage the gas controls. A backup wrench is required to be used on the valve to avoid damage. Do not overtighten the connection.

The capacities of gas pipe of different diameters and lengths in cu. ft. per hr. with pressure drop of 0.3 in. and specific gravity of 0.60 (natural gas) are shown in Table 1.

After determining the pipe length, select the pipe size which will provide the minimum cubic feet per hour required for the gas input rating of the furnace. By formula:

$$\text{Cu. Ft. Per Hr. Required} = \frac{\text{Gas Input of Furnace (BTU/HR)}}{\text{Heating Value of Gas (BTU/FT}^3\text{)}}$$

The gas input of the furnace is marked on the furnace rating plate. The heating value of the gas (BTU/FT^3) may be determined by consulting the local natural gas utility or the L.P. gas supplier.

B. LP CONVERSION

⚠ WARNING

THIS UNIT IS EQUIPPED AT THE FACTORY FOR USE ON NATURAL GAS ONLY. CONVERSION TO LP GAS REQUIRES A SPECIAL KIT SUPPLIED BY THE DISTRIBUTOR OR MANUFACTURER. MAILING ADDRESSES ARE LISTED ON THE FURNACE RATING PLATE, PARTS LIST AND WARRANTY. FAILURE TO USE THE PROPER CONVERSION KIT CAN CAUSE FIRE, CARBON MONOXIDE POISONING, EXPLOSION, PERSONAL INJURY, PROPERTY DAMAGE OR DEATH.

Convert the unit to use liquefied petroleum (LP) gas by replacing with the stem/spring assembly supplied in the conversion kit. The LP gas valve maintains the proper manifold pressure for LP gas. The correct burner LP orifices are included in the kit.

See Figure 18A for component locations.

NOTE: Order the correct LP conversion kit from the furnace manufacturer. ***See Conversion Kit Index shipped with unit for proper LP kit number. Furnace conversion to LP gas must be performed by a qualified technician.***

FIGURE 18A
HEAT EXCHANGER COMPONENT IDENTIFICATION

BTUH	NO. OF INDUCERS	NO. OF PRESSURE SWTICHES	NO. OF TUBES	NO. OF BURNERS
250,000	2	2	10	10
300,000	3	3	12	12
350,000	3	3	14	14
400,000	4	4	14	14

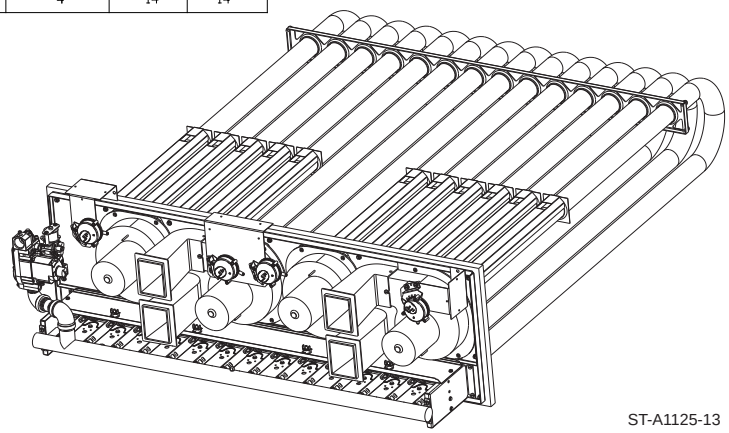

ST-A1125-13

FIGURE 18B
HONEYWELL VR8305Q4120 TWO STAGE GAS VALVE

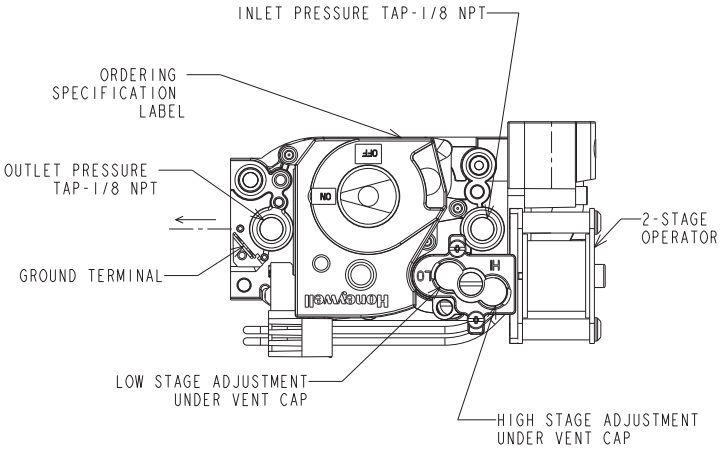

TABLE 2
LP GAS PIPE CAPACITY TABLE (CU. FT./HR.)

Maximum capacity of pipe in thousands of BTU per hour of undiluted liquefied petroleum gases (at 11 inches water column inlet pressure).
(Based on a Pressure Drop of 0.5 Inch Water Column)

Nominal Iron Pipe Size, Inches	Length of Pipe, Feet											
	10	20	30	40	50	60	70	80	90	100	125	150
1/2	275	189	152	129	114	103	96	89	83	78	69	63
3/4	567	393	315	267	237	217	196	182	173	162	146	132
1	1,071	732	590	504	448	409	378	346	322	307	275	252
1-1/4	2,205	1,496	1,212	1,039	913	834	771	724	677	630	567	511
1-1/2	3,307	2,299	1,858	1,559	1,417	1,275	1,181	1,086	1,023	976	866	787
2	6,221	4,331	3,465	2,992	2,646	2,394	2,205	2,047	1,921	1,811	1,606	1,496

Example (LP): Input BTU requirement of unit, 150,000
Equivalent length of pipe, 60 ft. = 3/4" IPS required.

C. ADJUSTING OR CHECKING FURNACE INPUT

– Natural Gas Line Pressure 5" - 10.5" W.C.
– LP Gas Line Pressure 11" - 13" W.C.

– Natural Gas Manifold Pressure 3.5" W.C
– LP Gas Manifold Pressure - 10" W.C.

Supply and manifold pressure taps are located on the gas valve body 1/8" N.P.T. and on the manifold. See Figure 18B.

Use a properly calibrated manometer gauge for accurate gas pressure readings.

Only small variations in the gas flow should be made by means of the pressure regulator adjustment. Furnaces functioning on LP gas must be set by means of the tank or branch supply regulators. The furnace manifold pressure should be set at 10" W.C. at the gas control valve.

To adjust the pressure regulator, remove the regulator vent cover and turn the adjustment screw clockwise to increase pressure or counterclockwise to decrease pressure. See Figure 18B. **Then replace the regulator vent cover securely.**

Any necessary major changes in the gas flow rate should be made by changing the size of the burner orifices. To change orifice spuds, shut off the manual main gas valve and remove the gas manifold.

For elevations up to 2,000 feet, rating plate input ratings apply. For high altitudes (elevations over 2,000 ft.), see conversion kit index 92-21519-XX for derating and orifice spud sizes.

Check of input is important to prevent over-firing of the furnace beyond its design-rated input. NEVER SET INPUT ABOVE THAT SHOWN ON THE RATING PLATE. Use the following table or formula to determine input rate.

$$\text{Cu. Ft. Per Hr. Required} = \frac{\text{Heating Value of Gas (BTU/Cu. Ft.)} \times 3600}{\text{Time in Seconds (for 1 Cu. Ft.) of Gas}}$$

Start the furnace and measure the time required to burn one cubic foot of gas. Prior to checking the furnace input, make certain that all other gas appliances are shut off, with the exception of pilot burners. Time the meter with only the furnace in operation.

IMPORTANT NOTE FOR ALTITUDES ABOVE 2,000 FEET (610 METERS): The main burner orifices in your furnace and in these kits are sized for the nameplate input and intended for installations at elevations up to 2,000 feet in the USA or Canada, or for elevations of 2,000 - 4,500 feet (610 -1,373 meters) in Canada if the unit has been derated at the factory. For elevations above 2,000 feet (610 meters) **IN THE USA ONLY** (see ANSI-Z223.1), the burner orifices must be sized to reduce the input 4% for each 1,000 feet (305 meters) above sea level.

NOTICE: DERATING OF THE HEATING INPUT FOR HIGH ALTITUDE IN THE FIELD IS UNLAWFUL IN CANADA (REFER TO CAN/CGA 2.17). UNITS INSTALLED IN ALTITUDES GREATER THAN 2,000 FEET (610 METERS) MUST BE SHIPPED FROM THE FACTORY OR FROM A FACTORY AUTHORIZED CONVERSION STATION WITH THE HEATING INPUT DERATED BY 10% SO AS TO OPERATE PROPERLY IN ALTITUDES FROM 2,000 - 4,500 FEET (610 - 1,373 METERS).

TABLE 3

METER TIME IN MINUTES AND SECONDS FOR NORMAL INPUT RATING OF FURNACES EQUIPPED FOR NATURAL OR LP GAS											
INPUT BTU/HR	METER SIZE CU. FT.	HEATING VALUE OF GAS BTU PER CU. FT.									
		900		1000		1040		1100		2500	
		MIN.	SEC.	MIN.	SEC.	MIN.	SEC.	MIN.	SEC.	MIN.	SEC.
250,000	ONE		13.0		14.4		15.0		15.8		36.0
	TEN	2	10	2	24	2	30	2	38	6	0
300,000	ONE		10.8		12.0		12.5		13.2		30.0
	TEN	1	48	2	0	2	5	2	12	5	0
350,000	ONE		9.3		10.3		10.7		11.3		25.7
	TEN	1	33	1	43	1	47	1	53	4	17
400,000	ONE		8.1		9.0		9.36		9.9		22.5
	TEN	1	21	1	30	1	36	1	39	3	45

FIGURE 19
CONDENSATE DRAIN

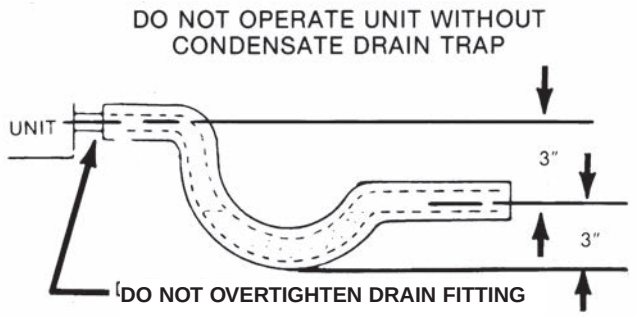

D. CONDENSATE DRAIN

IMPORTANT: Install a condensate trap to ensure proper condensate drainage. See Figure 19.

The condensate drain pan has a threaded female 1 inch NPT (11.5 TPI) connection. Consult local codes or ordinances for specific requirements of condensate drain piping and disposal.

- To use the removable drain pan feature of this unit, some of the condensate line joints should assembled for easy removal and cleaning.
- Use a thin layer of Teflon tape or paste on drain pan connections and install only hand tight.
- Do not over tighten drain pan connections as damage to the drain pan may occur.
- Drain line MUST NOT block service access panels.
- Drain line must be no smaller than drain pan outlet and adequately sized to accommodate the condensate discharge from the unit.
- Drain line should slope away from unit a minimum of 1/8” per foot to ensure proper drainage.
- Drain line must be routed to an acceptable drain or outdoors in accordance with local codes.
- Do not connect condensate drain line to a closed sewer pipe.
- Drain line may need insulation or freeze protection in certain applications.

⚠ WARNING

TURN OFF THE MAIN ELECTRICAL POWER AT THE BRANCH CIRCUIT DISCONNECT CLOSEST TO THE UNIT BEFORE ATTEMPTING ANY WIRING. FAILURE TO DO SO CAN CAUSE ELECTRICAL SHOCK RESULTING IN PERSONAL INJURY OR DEATH.

IV. WIRING

A. POWER SUPPLY

1. **All wiring should be made in accordance with the National Electrical Code.** Consult the local power company to determine the availability of sufficient power to operate the unit. Check the voltage at power supply to make sure it corresponds to

the unit's RATED VOLTAGE REQUIREMENT. Install a branch circuit disconnect near the rooftop, in accordance with the N.E.C., C.E.C. or local codes.

2. It is important that proper electrical power is available at the unit. Voltage should not vary more than 10% from that stamped on the unit nameplate. On three phase units, phases must be balanced within 3%.
3. For branch circuit wiring (main power supply to unit disconnect), the minimum wire size for the length of run can be determined from Table 3 using the circuit ampacity found on the unit rating plate. Use the smallest wire size allowable from the unit disconnect to unit.
4. For through the base wiring entry reference **Figure 21.** All fittings and conduit are field supplied for this application. Reference the chart with **Figure 21** for proper hole and conduit size.

TABLE 4

AWG Copper Wire Size	AWG Aluminum Wire Size	Connector Type and Size (or equivalent)	
#12	#10	T & B Wire Nut	PT2
#10	# 8	T & B Wire Nut	PT3
# 8	# 6	Sherman Split Bolt	TSP6
# 6	# 4	Sherman Split Bolt	TSP4
# 4	# 2	Sherman Split Bolt	TSP2

NOTES:

1. For branch circuit wiring (main power supply to unit disconnect), the minimum wire size for the length of run can be determined from this table using the circuit ampacity found on the unit rating plate. From the unit disconnect to unit, the smallest wire size allowable in Table 4 may be used, as the disconnect must be in sight of the unit.
2. Wire size based on 75°C rated wire insulation for 1% voltage drop.
3. For more than 3 conductors in a raceway or cable, see the N.E.C. (C.E.C. in Canada) for derating the ampacity of each conductor.

IMPORTANT: THIS UNIT IS APPROVED FOR USE WITH COPPER CONDUCTORS <u>ONLY</u> CONNECTED TO UNIT CONTACTOR.

WARRANTY MAY BE JEOPARDIZED IF ALUMINUM WIRE IS CONNECTED TO UNIT CONTACTOR.

Special instructions apply for power wiring with aluminum conductors: Warranty is void if connections are not made per instructions.

Attach a length (6" or more) of recommended size copper wire to the unit contactor terminals L1, L2 and L3 for three phase.

FIGURE 20
RECOMMENDED BRANCH CIRCUIT DISCONNECT LOCATION

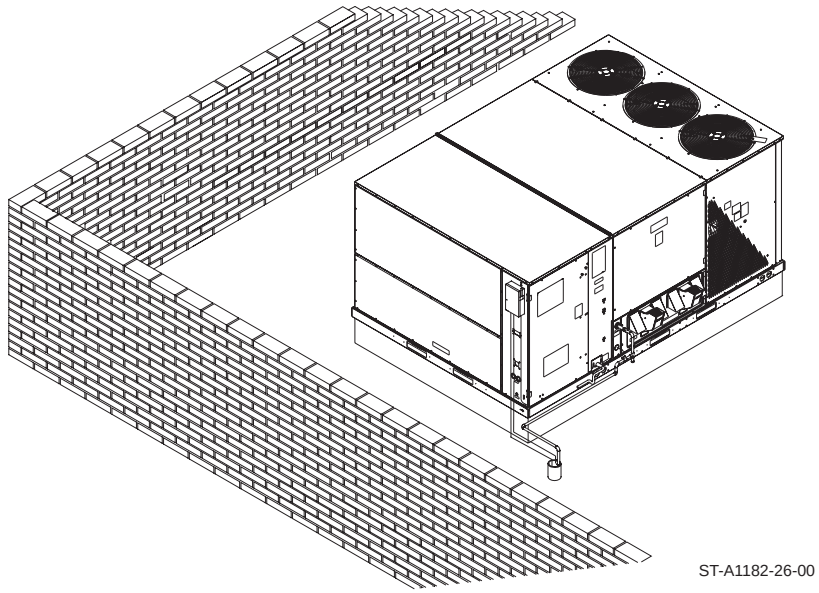

Select the equivalent aluminum wire size from the tabulation below:

Splice copper wire pigtails to aluminum wire with U.L. recognized connectors for copper-aluminum splices. Please exercise the following instructions very carefully to obtain a positive and lasting connection:

1. Strip insulation from aluminum conductor.
2. Coat the stripped end of the aluminum wire with the recommended inhibitor, and wire brush the aluminum surface through inhibitor. INHIBITORS: Brundy-Pentex “A”; Alcoa-No. 2EJC; T & B-KPOR Shield.
3. Clean and recoat aluminum conductor with inhibitor.
4. Make the splice using the above listed wire nuts or split bolt connectors.
5. Coat the entire connection with inhibitor and wrap with electrical insulating tape.

B. HOOK-UP

To wire unit, refer to the following hook-up diagram.

Refer to Figures 2, 7 and 21 for location of wiring entrances.

Wiring to be done in the field between the unit and devices not attached to the unit, or

TABLE 5

UNIT MCA	COPPER WIRE SIZE—AWG					
	SUPPLY WIRE LENGTH—FEET					
	50	100	150	200	250	300
20	10	8	6	4	4	4
25	10	8	6	4	4	3
30	8	6	4	4	3	2
35	8	6	4	3	2	1
40	8	6	4	3	2	1
45	8	4	3	2	1	1/0
50	6	4	3	2	1	1/0
60	6	4	2	1	1/0	2/0
70	4	3	2	1/0	2/0	3/0
80	4	3	1	1/0	2/0	3/0
90	3	2	1/0	2/0	3/0	4/0
100	3	2	1/0	2/0	3/0	4/0
110	2	1	2/0	3/0	4/0	250
125	1	1	2/0	3/0	4/0	250
150	1/0	1/0	3/0	4/0	250	300
175	2/0	2/0	4/0	250	300	350

FIGURE 21
BASE ENTRY LOCATIONS

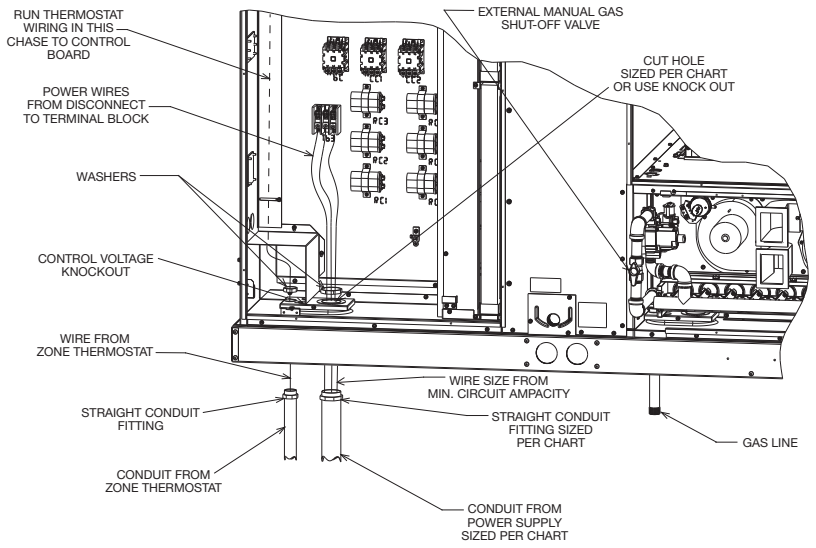

	WIRE SIZE, AWG											
	14	12	10	8	6	4	3	2	1	0	00	000
CONDUIT SIZE	1/2″	1/2″	1/2″	3/4″	1″	1″	1-1/4″	1-1/4″	1-1/2″	1-1/2″	2″	2″
HOLE SIZE	7/8″	7/8″	7/8″	1-31/32″	1-23/64″	1-23/64″	1-23/32″	1-23/32″	1-31/32″	1-31/32″	2-15/32″	2-15/32″

NOTES: 1. DETERMINE REQUIRED WIRE SIZE FROM MINIMUM CIRCUIT AMPACITY SHOWN IN INSTALLATION & OPERATING INSTRUCTION.
2. BOTTOM POWER ENTRY WILL NOT ACCOMMODATE WIRE LARGER THAN #2 AWG (SHADED AREA).

FIGURE 22
TYPICAL THERMOSTAT WIRING

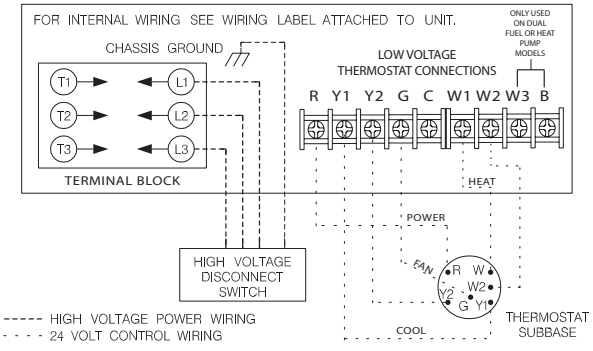

between separate devices which are field installed and located, shall conform with the temperature limitation for Type T wire [63°F rise (35°C)] when installed in accordance with the manufacturer's instructions.

C. INTERNAL WIRING

A diagram of the internal wiring of this unit is located on the inside of control access panel and in this manual. If any of the original wire as supplied with the appliance must be replaced, the wire gauge and insulation must be same as original wiring.

Transformer is factory wired for 230 volts on 208/230 volt models and must be changed for 208 volt applications. See unit wiring diagram for 208 volt wiring.

D. THERMOSTAT

The room thermostat must be compatible with the spark ignition control on the unit. Generally, all thermostats that are not of the "current robbing" type are compatible with the integrated furnace control. The low voltage wiring should be sized as shown in Table 6.

Install the room thermostat in accordance with the instruction sheet packed in the box with the thermostat. Run the thermostat lead wires through control entry opening through the thermostat wiring chase on the unit (Figure 2 or Figure 21) and connect to the low voltage thermostat connections (see wiring diagram). Never install the thermostat on an outside wall or where it will be influenced by drafts, concealed hot or cold water pipes or ducts, lighting fixtures, radiation from fireplace, sun rays, lamps, televisions, radios or air streams from registers. Refer to instructions packed with the thermostat for "heater" selection or adjustment.

See Thermostat Specification Sheet for recommended thermostats.

TABLE 6

FIELD WIRE SIZE FOR 24 VOLT THERMOSTAT CIRCUITS							
		SOLID COPPER WIRE - AWG.					
Thermostat Load - Amps	3.0	16	14	12	10	10	10
	2.5	16	14	12	12	12	10
	2.0	18	16	14	12	12	10
		50	100	150	200	250	300
		Length of Run – Feet (1)					

(1) The total wire length is the distance from the unit to the thermostat and back to the unit.

NOTE: DO NOT USE CONTROL WIRING SMALLER THAN NO. 18 AWG.

V. FURNACE SECTION CONTROLS AND IGNITION SYSTEM

NORMAL FURNACE OPERATING SEQUENCE

This unit is equipped with a two stage integrated direct spark ignition control.

NORMAL HEAT MODE

A. Call For First Stage (low fire) Only:

1. Zone thermostat contacts close, a call for first stage (low fire) heat is initiated.
2. Control runs self check.
3. Control checks the high-limit switch for normally closed contacts, each pressure switch for normally open contacts, and all flame rollout switches for continuity.
4. Control energizes each low-fire inducer.
5. Control checks each low-fire pressure switch for closure.
6. If each low-fire pressure switch is closed, the control starts a 30 second prepurge. If either low-fire pressure switch is still open after 180 seconds, the high-fire inducers will be energized until closure.
7. After prepurge timeout, control initiates spark for 2 seconds minimum, 7 second maximum ignition trial, initiates 45 second, second stage (high fire) warm up timing.
8. Control detects flame, de-energizes spark and initiates 45 second delay on blower timing.
9. After a fixed 45 seconds indoor blower delay on, the control energizes the indoor blower.
10. After the 45 second second stage warmup period control checks thermostat input. If only W1 is called for, W2 is de-energized and the control starts a 5 second off delay on the W2 inducer.
11. After fixed 5 seconds the W2 inducer is de-energized.
12. Control enters normal operating loop where all inputs are continuously checked.

FIGURE 23

BTUH	NO. OF INDUCERS	NO. OF PRESSURE SWTICHES	NO. OF TUBES	NO. OF BURNERS
250,000	2	2	10	10
300,000	3	3	12	12
350,000	3	3	14	14
400,000	4	4	14	14

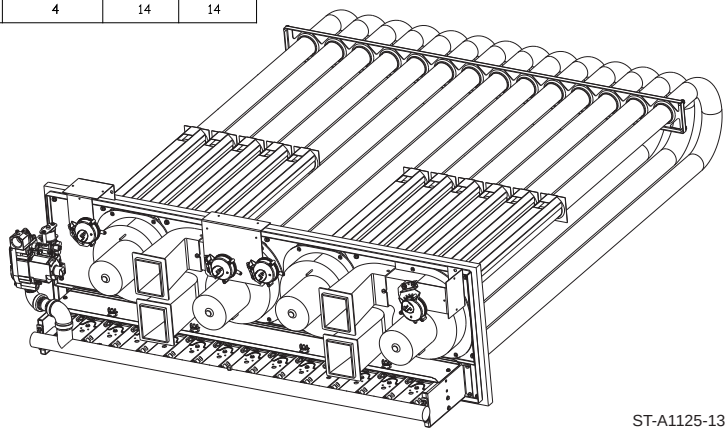

ST-A1125-13

B. Call For Second Stage, After First Stage Established; Starting from A.11:

1. If a call for second stage (high fire) is initiated after a call for first stage heat is established, the control energizes the W2 inducer assures the high-fire pressure switch is closed and energizes the second stage of the gas valve.
2. Control enters normal operating loop where all inputs are continuously checked.

C. Second Stage Satisfied; First Stage Still Called For; Starting From B.2:

1. Once the call for second stage is satisfied, the control starts a 30 second off delay on W2 inducer and reduces the gas valve to first stage.
2. Control enters normal operating loop where all inputs are continuously checked.

D. First Stage Satisfied:

1. Zone thermostat is satisfied.
2. Control de-energizes gas valve.
3. Control senses loss of flame.
4. Control initiates 5 second inducer postpurge and 90 second indoor blower delay off.
5. Control de-energizes inducer blower.
6. Control de-energizes indoor blower.
7. Control in the stand by mode with solid red LED.

E. First Stage and Second Stage Called Simultaneously:

1. Zone thermostat contacts close, a call for first stage (low fire) and second stage (high fire) heat is initiated.
2. Control runs self check.
3. Control checks the high-limit switch for normally closed contacts, each pressure switch for normally open contacts, and all flame rollout switches for continuity.
4. Control energizes each low-fire inducer.
5. Control checks each pressure switch for closure.
6. If each low-fire pressure switch is closed, the control starts a 30 second prepurge. If either switch is still open after 180 seconds, the high-fire inducers will be energized until closure.
7. After prepurge timeout, control initiates spark for 2 seconds minimum, 7 second maximum ignition trial, and initiates 45 second second stage warm up timing.
8. Control detects flame, de-energizes spark and starts a 45 second indoor blower delay on timing.
9. After a fixed 45 seconds indoor blower delay on, the control energizes the indoor blower.
10. After the 45 seconds second stage warmup period control checks the thermostat input. If W1 and W2 is present control enters normal operating loop where all inputs are continuously checked.

F. First Stage and Second Stage Removed Simultaneously:

1. Upon a loss of W1 and W2 the gas valve is de-energized.
2. Upon a loss of flame, each inducer will complete a 5 second postpurge and the indoor blower will complete a 90 second delay off.
3. Control in the stand by mode with solid red LED.

The integrated control is a four-ignition system.

After a total of four cycles without sensing main burner flame, the system goes into a 100% lockout mode. After one hour, the ignition control repeats the prepurge and ignition cycles for 4 tries and then go into 100% lockout mode again. It continues this sequence of cycles and lockout each hour until ignition is successful or power is interrupted. During the lockout

mode, neither the ignitor or gas valve will be energized until the system is reset by turning the thermostat to the “OFF” position or interrupting the electrical power to the unit for 3 seconds or longer. The induced draft blower and main burner will shut off when the thermostat is satisfied.

The circulating air blower will start and run on the heating speed if the thermostat fan switch is in the “ON” position.

The integrated furnace control is equipped with diagnostic LED. The LED is lit continuously when there is power to the control, with or without a call for heat. If the LED is not lit, there is either no power to the control or there is an internal component failure within the control, and the control should be replaced.

If the control detects the following failures, the LED will flash on for approximately 1/4 second, then off for 3/4 second for designated failure detections.

1 Flash: Failed to detect flame within the four tries for ignition.

2 Flash: Pressure switch or induced draft blower problem detected.

⚠ WARNING

DO NOT ATTEMPT TO MANUALLY LIGHT THIS FURNACE WITH A MATCH OR ANY OPEN FLAME. ATTEMPTING TO DO SO CAN CAUSE AN EXPLOSION OR FIRE RESULTING IN PROPERTY DAMAGE, PERSONAL INJURY OR DEATH.

3 Flash: High limit or auxiliary limit open.

4 Flash: Flame sensed and gas valve not energized or flame sensed with no “W” signal.

5 Flash: Overtemperature switch open.

OPERATING INSTRUCTIONS

This appliance is equipped with integrated furnace control. This device lights the main burners each time the room thermostat (closes) calls for heat. See operating instructions on the back of the furnace/controls access panel.

TO START THE FURNACE

1. Set the thermostat to its lowest setting.
2. Turn off all electric power to the appliance.
3. This appliance does not have a pilot. It is equipped with an ignition device which automatically lights the burner. Do not try to light the burner by hand.
4. Remove control door.
5. Move control knob to the “OFF” position. Turn the knob by hand only, do not use any kind of tool.
6. Wait five (5) minutes to clear out any gas. Then smell for gas, including near the floor. If you smell gas, STOP! Follow B in the safety information on the Operating Instructions located on the back of the controls/access panel. If you don’t smell gas, go to the next step.
7. Move the gas control knob from “OFF” position to “ON” position. Operate this appliance with the gas control knob in the “ON” position only. Do not use the gas control knob as a means for throttling the burner input rate.
8. Replace the control door.
9. Turn on all electric power to the appliance.
10. Set the thermostat to the desired setting.
11. If the appliance will not operate, follow the instructions below on how to shut down the furnace.

⚠ WARNING

THE SPARK IGNITOR AND IGNITION LEAD FROM THE IGNITION CONTROL ARE HIGH VOLTAGE. KEEP HANDS OR TOOLS AWAY TO PREVENT ELECTRICAL SHOCK. SHUT OFF ELECTRICAL POWER BEFORE SERVICING ANY OF THE CONTROLS. FAILURE TO ADHERE TO THIS WARNING CAN RESULT IN PERSONAL INJURY OR DEATH.

The initial start-up on a new installation may require the control system to be energized for some time until air has bled through the system and fuel gas is available at the burners.

TO SHUT DOWN FURNACE

1. Set the thermostat to the lowest setting.
2. Turn off all electric power to the appliance if service is to be performed.
3. Remove control door.
4. Move control knob to the “OFF” position.
5. Replace control door.

⚠ WARNING

SHOULD OVERHEATING OCCUR OR THE GAS SUPPLY FAIL TO SHUT OFF, SHUT OFF THE MANUAL GAS VALVE TO THE APPLIANCE BEFORE SHUTTING OFF THE ELECTRICAL SUPPLY. FAILURE TO DO SO CAN RESULT IN AN EXPLOSION OR FIRE CAUSING PROPERTY DAMAGE, SEVERE PERSONAL INJURY OR DEATH!

BURNERS

Burners for these units have been designed so that field adjustment is not required. Burners are tray-mounted and accessible for easy cleaning when required.

MANUAL RESET OVERTEMPERATURE CONTROL

Four manual reset overtemperature controls are located on the burner shield. These devices senses blockage in the heat exchanger or insufficient combustion air. This shuts off the main burners if excessive temperatures occur in the burner compartment.

Operation of this control indicates an abnormal condition. Therefore, the unit should be examined by a qualified installer, service agency, or the gas supplier before being placed back into operation.

⚠ WARNING

DO NOT JUMPER THIS DEVICE! DO NOT RESET THE OVERTEMPERATURE CONTROL WITHOUT TAKING CORRECTIVE ACTION TO ASSURE THAT AN ADEQUATE SUPPLY OF COMBUSTION AIR IS MAINTAINED UNDER ALL CONDITIONS OF OPERATION. FAILURE TO DO SO CAN RESULT IN CARBON MONOXIDE POISONING OR DEATH. REPLACE THIS CONTROL ONLY WITH THE IDENTICAL REPLACEMENT PART.

PRESSURE SWITCH

This furnace has two sets of pressure switches for sensing a blocked exhaust or a failed induced draft blower. They are normally open and close when the induced draft blower starts, indicating air flow through the combustion chamber.

LIMIT CONTROL

The supply air high temperature limit cut-off is set at the factory and cannot be adjusted. It is calibrated to prevent the air temperature leaving the furnace from exceeding the maximum outlet air temperature.

⚠ WARNING

DO NOT JUMPER THIS DEVICE! DOING SO CAN CAUSE A FIRE OR EXPLOSION RESULTING IN PROPERTY DAMAGE, PERSONAL INJURY OR DEATH.

IMPORTANT: *Replace this control only with the identical replacement part.*

VI. COOLING SECTION OPERATION

COOLING MODE

A. **Call for first stage cooling**

1. Zone thermostat contacts close and a call for cooling is initiated.
2. Inputs ‘Y1’ and ‘G’ to the control are energized.
3. Control senses ‘Y1’ and ‘G’. After 1 sec. delay, control energizes indoor blower and first stage compressor.
4. Control enters normal operating loop where all inputs are continuously checked.
5. Zone thermostat is satisfied.
6. Control de-energizes indoor blower relay after 80 second indoor blower delay off.
7. Control in the stand by mode with solid red LED.

B. **Call for second stage cooling. After first stage cooling established: starting from A4.**

1. If a call for second stage cooling is initiated after a call for first stage cooling is established, the control energizes Y2 and energizes the second stage compressor.
2. Control enters normal operating loop where all inputs are continuously checked.

C. **Second stage satisfied: first stage still called for: starting from B2.**

1. Y2 is de-energized and second stage compressor is de-energized.

D. **First stage and second stage called simultaneously.**

1. Zone thermostat contacts close, a call for first and second stage cooling is initiated.
2. Inputs Y1, Y2 and G to the control are energized.
3. Control senses Y1, Y2 and G, after 1 second delay, control energizes indoor blower, first and second stage compressor are energized.

E. **First stage and second stage removed simultaneously.**

1. Upon a loss of Y1 and Y2 each compressor is de-energized. Control de-energizes indoor blower relay after 80 second indoor blower delay off.
2. Control in the stand by mode with solid red LED.

CONTINUOUS FAN MODE

A 'G' input only indicates a zone thermostat call for continuous indoor blower operation.

VII. SYSTEM OPERATING INFORMATION

ADVISE THE CUSTOMER

1. Change the air filters regularly. The heating system operates better, more efficiently and more economically.
2. Arrange the furniture and drapes so that the supply air registers and the return air grilles are unobstructed.
3. Close doors and windows. This reduces the heating and cooling load on the system.
4. Avoid excessive use of exhaust fans.
5. Do not permit the heat generated by television, lamps or radios to influence the thermostat operation.
6. Except for the mounting platform, keep all combustible articles three feet from the unit and exhaust system.
7. ***IMPORTANT:*** *Replace all blower doors and compartment cover after servicing the unit. Do not operate the unit without all panels and doors securely in place.*
8. Do not allow snow or other debris to accumulate in the vicinity of the appliance.

FURNACE SECTION MAINTENANCE

The unit's furnace should operate for many years without excessive scale build-up in flue passageways; however, it is recommended that a qualified installer, service agency, or the gas supplier annually inspect the flue passageways, the exhaust system and the burners for continued safe operation, paying particular attention to deterioration from corrosion or other sources.

If during inspection the flue passageways and exhaust system are determined to require cleaning, the following procedures should be followed **(by a qualified installer, service agency, or gas supplier):**

1. **Turn off the electrical power to the unit and set the thermostat to the lowest temperature.**
2. **Shut off the gas supply to the unit either at the meter or at manual valve in the supply piping.**
3. Remove the furnace controls access panel and the control box cover.
4. Disconnect the gas supply piping from the gas valve.
5. Disconnect the wiring to the induced draft blower motors, gas valve, flame sensor, and flame roll-out control, and ignitor cable. **Mark all wires disconnected for proper reconnection**.
6. Remove the screws (4) connecting the burner tray to the heat exchanger mounting panel.
7. Remove the burner tray and the manifold assembly from the unit.

⚠ WARNING

LABEL ALL WIRES PRIOR TO DISCONNECTION WHEN SERVICING CONTROLS. WIRING ERRORS CAN CAUSE IMPROPER AND DANGEROUS OPERATION RESULTING IN FIRE, ELECTRICAL SHOCK, PROPERTY DAMAGE, PERSONAL INJURY OR DEATH.

⚠ WARNING

HOLES IN THE EXHAUST TRANSITION OR HEAT EXCHANGER CAN CAUSE TOXIC FUMES TO ENTER THE HOME. THE EXHAUST TRANSITION OR HEAT EXCHANGER MUST BE REPLACED IF THEY HAVE HOLES OR CRACKS IN THEM. FAILURE TO DO SO CAN CAUSE CARBON MONOXIDE POISONING RESULTING IN PERSONAL INJURY OR DEATH.

8. Remove the screws (10) connecting the four induced draft blowers to the collector box and screws (12) connecting the inducer mounting plate to the heat exchanger center panel. Remove the induced draft blowers and the collector box from the unit.
9. Remove the turbulators from inside the heat exchangers by inserting the blade of a screwdriver under the locking tabs. Pop the tabs out of the expanded grooves of the heat exchanger. Slide the turbulators out of the heat exchangers.
10. Direct a water hose into the outlet of the heat exchanger top. Flush the inside of each heat exchanger tube with water. Blow out each tube with air to remove excessive moisture.
11. Reassemble (steps 1 through 9 in reverse order). **Be careful not to strip out the screw holes used to mount the collector box and inducer blower. Replace inducer blower gasket and collector box gasket with factory replacements if damaged.**

The manufacturer recommends that a qualified installer, service agency or the gas supplier visually inspect the burner flames for the desired flame appearance at the beginning of the heating season and approximately midway in heating season.

The manufacturer also recommends that a qualified installer, service agency or the gas supplier clean the flame sensor with steel wool at the beginning of the heating season.

⚠ WARNING

DISCONNECT MAIN ELECTRICAL POWER TO THE UNIT BEFORE ATTEMPTING MAINTENANCE. FAILURE TO DO SO MAY RESULT IN ELECTRICAL SHOCK OR SEVERE PERSONAL INJURY OR DEATH.

LUBRICATION

IMPORTANT: DO NOT attempt to lubricate the bearings on the blower motor or the induced draft blower motor. Addition of lubricants can reduce the motor life and void the warranty.

The blower motor and induced draft blower motor are prelubricated by the manufacturer and do not require further attention.

A qualified installer, service agency or the gas supplier must periodically clean the motors to prevent the possibility of overheating due to an accumulation of dust and dirt on the windings or on the motor exterior. And, as suggested elsewhere in these instructions, the air filters should be kept clean because dirty filters can restrict air flow and the motor depends upon sufficient air flowing across and through it to prevent overheating.

COOLING SECTION MAINTENANCE

It is recommended that at the beginning of each cooling season a qualified installer or service agency inspect and clean the cooling section of this unit. The following areas should be addressed: evaporator coil. condenser coil, condenser fan motor and venturi area.

To inspect the evaporator coil:

1. Open the control/filter access panel and remove filters. Also, remove blower access panel. In downflow applications remove the horizontal return to gain access.
2. Shine a flashlight on the evaporator coil (both sides) and inspect for accumulation of lint, insulation, etc.
3. If coil requires cleaning, follow the steps shown below.

⚠ WARNING

DISCONNECT MAIN ELECTRICAL POWER TO THE UNIT BEFORE ATTEMPTING MAINTENANCE. FAILURE TO DO SO CAN CAUSE ELECTRICAL SHOCK RESULTING IN SEVERE PERSONAL INJURY OR DEATH.

Cleaning Evaporator Coil

1. The coil should be cleaned when it is dry. If the coil is coated with dirt or lint, vacuum it with a soft brush attachment. Be careful not to bend the coil fins.
2. If the coil is coated with oil or grease, clean it with a mild detergent-and-water solution. Rinse the coil thoroughly with water. **IMPORTANT: Do not** use excessive water pressure. Excessive water pressure can bend the fins and tubing of the coil and lead to inadequate unit performance. Be careful not to splash water excessively into unit.
3. Inspect the drain pan and condensate drain at the same time the evaporator coil is checked. Clean the drain pan by flushing with water and removing any matters of obstructions which may be present.
4. Go to next section for cleaning the condenser coil.

⚠ WARNING

LABEL ALL WIRES PRIOR TO DISCONNECTION WHEN SERVICING THE UNIT. WIRING ERRORS CAN CAUSE IMPROPER AND DANGEROUS OPERATION RESULTING IN FIRE, ELECTRICAL SHOCK, PROPERTY DAMAGE, SEVERE PERSONAL INJURY OR DEATH.

Cleaning Condenser Coil, Condenser Fan, Circulation Air Blower and Venturi

1. Remove the condenser access end panel and/or compressor access louver panel. Disconnect the wires to the condenser fan motor in the control box (see wiring diagram).
2. The coil should be cleaned when it is dry. If the coil is coated with dirt or lint, vacuum it with a soft brush attachment. Be careful not to bend the coil fins.

3. If the coil is coated with oil or grease, clean it with a mild detergent-and-water solution. Rinse the coil thoroughly with water. **IMPORTANT: Do not** use excessive water pressure. Excessive water pressure can bend the fins and tubing of the coil and lead to inadequate unit performance. Be careful not to splash water excessively into unit.
4. The venturi should also be inspected for items of obstruction such as collections of grass, dirt or spider webs. Remove any that are present.
5. Inspect the circulating air blower wheel and motor for accumulation of lint, dirt or other obstruction and clean it necessary. Inspect the blower motor mounts and the blower housing for loose mounts or other damage. Repair or replace if necessary.

Re-assembly

1. Reconnect fan motor wires per the wiring diagram attached to the back of the control cover.
2. Replace the control box cover.
3. Close the filter/control access panel and replace the blower/evaporator coil access panels.
4. Restore electrical power to the unit and check for proper operation, especially the condenser fan motor.

REPLACEMENT PARTS

Contact your local distributor for a complete parts list.

TROUBLESHOOTING

Refer to Figures 24 and 25 for determining cause of unit problems.

WIRING DIAGRAMS

Figures 26, 27, 28 and 29 are complete wiring diagrams for the unit and its power sources. Also located on back of control access panel.

CHARGING

See Figures 30, 31 and 32 for proper charging information.

AIRFLOW PERFORMANCE — 15 TON [52.7kW] — 60 Hz — SIDEFLOW

Air Flow CFM [L/s]	Model RKKL-B180 Voltage 208/230, 460, 575 — 3 phase 60 Hz																																							
	External Static Pressure — Inches of Water [kPa]																																							
	0.1 [.02]		0.2 [.05]		0.3 [.07]		0.4 [.10]		0.5 [.12]		0.6 [.15]		0.7 [.17]		0.8 [.20]		0.9 [.22]		1.0 [.25]		1.1 [.27]		1.2 [.30]		1.3 [.32]		1.4 [.35]		1.5 [.37]		1.6 [.40]		1.7 [.42]		1.8 [.45]		1.9 [.47]		2.0 [.50]	
	RPM	W	RPM	W	RPM	W	RPM	W	RPM	W	RPM	W	RPM	W	RPM	W	RPM	W	RPM	W	RPM	W	RPM	W	RPM	W	RPM	W	RPM	W	RPM	W	RPM	W	RPM	W	RPM	W	RPM	W
4800 [2265]	—	—	—	—	—	—	—	—	—	—	589	1395	613	1488	636	1584	659	1681	681	1781	703	1883	725	1987	746	2093	766	2202	787	2313	806	2426	826	2541	845	2658	863	2778	881	2900
5000 [2359]	—	—	—	—	—	—	—	—	574	1376	598	1469	621	1565	644	1663	667	1763	689	1866	710	1971	732	2078	752	2187	773	2299	793	2412	812	2528	831	2647	850	2767	868	2890	886	3014
5200 [2454]	—	—	—	—	—	—	—	—	583	1452	607	1549	630	1647	652	1748	675	1852	696	1957	718	2065	739	2175	759	2287	779	2401	799	2518	818	2637	837	2758	856	2881	874	3007	891	3134
5400 [2548]	—	—	—	—	—	—	—	—	592	1534	615	1634	638	1735	661	1839	683	1945	704	2054	725	2164	746	2277	766	2392	786	2509	806	2629	825	2751	843	2875	862	3001	879	3129	897	3260
5600 [2643]	—	—	—	—	—	—	578	1522	601	1622	624	1724	647	1829	669	1936	691	2045	712	2156	733	2270	753	2385	773	2503	793	2623	812	2746	831	2870	849	2997	867	3126	885	3258	902	3391
5800 [2737]	—	—	—	—	—	—	587	1612	610	1715	633	1821	655	1928	677	2038	699	2150	720	2264	741	2380	761	2499	781	2620	800	2743	819	2868	837	2996	856	3126	873	3258	891	3392	907	3528
6000 [2831]	—	—	—	—	573	1605	597	1709	620	1815	642	1923	664	2033	686	2146	707	2261	728	2378	748	2497	768	2618	788	2742	807	2868	826	2996	844	3127	862	3260	879	3394	896	3532	913	3671
6200 [2926]	—	—	—	—	583	1704	606	1811	629	1919	651	2030	673	2144	695	2259	715	2377	736	2497	756	2619	776	2744	795	2870	814	2999	832	3130	851	3264	868	3399	885	3537	902	3677	918	3819
6400 [3020]	—	—	570	1701	593	1809	616	1918	639	2030	661	2144	682	2260	703	2378	724	2499	744	2622	764	2747	784	2874	803	3004	821	3136	839	3270	857	3406	875	3544	892	3685	908	3828	924	3973
6600 [3114]	—	—	580	1809	603	1919	626	2031	648	2146	670	2263	691	2382	712	2503	732	2627	753	2753	772	2881	791	3011	810	3143	829	3278	846	3415	864	3554	881	3695	898	3839	914	3985	930	4133
6800 [3209]	—	—	591	1922	614	2035	636	2150	658	2268	679	2388	700	2510	721	2634	741	2760	761	2889	780	3020	799	3153	818	3288	836	3426	854	3566	871	3708	888	3852	904	3999	920	4147	—	—
7000 [3303]	578	1927	601	2041	624	2157	646	2275	667	2395	689	2518	709	2643	730	2770	750	2899	769	3031	788	3165	807	3301	825	3439	843	3579	861	3722	878	3867	894	4014	911	4164	926	4315	—	—
7200 [3398]	589	2049	612	2165	634	2284	656	2405	677	2528	698	2654	719	2782	739	2912	759	3044	778	3178	797	3315	815	3454	833	3595	851	3739	868	3884	885	4032	901	4182	917	4335	—	—	—	—

NOTE: L-Drive left of bold line, M-Drive right of bold line.

Drive Package	L							M						
Motor H.P. [W]	3 [2237.1]							5 [3728.5]						
Blower Sheave	BK105H							BK105H						
Motor Sheave	1VP-44							1VP-56						
Turns Open	0	1	2	**3**	4	5	6	0	1	2	3	**4**	5	6
RPM		733	701	**669**	640	605	572		927	903	873	**840**	808	775

NOTES:
1. Factory sheave settings are shown in bold type.
2. Do not set motor sheave below minimum or maximum turns open shown.
3. Re-adjustment of sheave required to achieve rated airflow at AHRI minimum External Static Pressure
4. Drive data shown is for horizontal airflow with dry coil. Add component resistance (below) to duct resistance to determine total External Static Pressure.

COMPONENT AIRFLOW RESISTANCE — 15 TON [52.7kW]

CFM [L/s]	4800 [2265]	5000 [2359]	5200 [2454]	5400 [2548]	5600 [2643]	5800 [2737]	6000 [2831]	6200 [2926]	6400 [3020]	6600 [3114]	6800 [3209]	7000 [3303]	7200 [3398]
	Resistance — Inches of Water [kPa]												
Wet Coil	0.03 [.01]	0.04 [.01]	0.05 [.01]	0.06 [.01]	0.06 [.01]	0.07 [.02]	0.08 [.02]	0.09 [.02]	0.10 [.02]	0.10 [.02]	0.11 [.03]	0.12 [.03]	0.13 [.03]
Downflow	0.05 [.01]	0.05 [.01]	0.05 [.01]	0.05 [.01]	0.05 [.01]	0.05 [.01]	0.05 [.01]	0.06 [.01]	0.06 [.01]	0.06 [.01]	0.07 [.02]	0.08 [.02]	0.08 [.02]
Downflow Economizer RA Damper Open	0.09 [.02]	0.10 [.02]	0.10 [.02]	0.11 [.03]	0.12 [.03]	0.13 [.03]	0.13 [.03]	0.14 [.03]	0.15 [.04]	0.16 [.04]	0.16 [.04]	0.17 [.04]	0.18 [.04]
Horizontal Economizer RA Damper Open	0.00 [.00]	0.01 [.00]	0.01 [.00]	0.02 [.00]	0.02 [.00]	0.03 [.01]	0.03 [.01]	0.04 [.01]	0.04 [.01]	0.05 [.01]	0.05 [.01]	0.06 [.01]	0.06 [.01]
Concentric Grill RXRN-AD80 or RXRN-AD81 & Transition RXMC-CJ07	0.21 [.05]	0.25 [.06]	0.28 [.07]	0.32 [.08]	0.35 [.09]	0.39 [.10]	0.43 [.11]	0.46 [.11]	0.50 [.12]	0.54 [.13]	0.57 [.14]	0.61 [.15]	0.64 [.16]

AIRFLOW CORRECTION FACTORS — 15 TON [52.7kW]

CFM [L/s]	4800 [2265]	5000 [2359]	5200 [2454]	5400 [2548]	5600 [2643]	5800 [2737]	6000 [2831]	6200 [2926]	6400 [3020]	6600 [3114]	6800 [3209]	7000 [3303]	7200 [3398]
Total MBH	0.98	0.98	0.99	1.00	1.00	1.01	1.02	1.02	1.03	1.04	1.04	1.05	1.06
Sensible MBH	0.91	0.94	0.96	0.99	1.02	1.04	1.07	1.10	1.12	1.15	1.18	1.20	1.23
Power kW	0.99	0.99	0.99	1.00	1.00	1.00	1.01	1.01	1.01	1.02	1.02	1.02	1.03

NOTE: Multiply correction factor times gross performance data — resulting sensible capacity cannot exceed total capacity.

[ ] Designates Metric Conversions

AIRFLOW PERFORMANCE — 20 TON [70.3kW] — 60 Hz — SIDEFLOW

Air Flow CFM [L/s]	Model RKKL-B240 Voltage 208/230, 460, 575 — 3 phase 60 Hz																																							
	External Static Pressure — Inches of Water [kPa]																																							
	0.1 [.02]		0.2 [.05]		0.3 [.07]		0.4 [.10]		0.5 [.12]		0.6 [.15]		0.7 [.17]		0.8 [.20]		0.9 [.22]		1.0 [.25]		1.1 [.27]		1.2 [.30]		1.3 [.32]		1.4 [.35]		1.5 [.37]		1.6 [.40]		1.7 [.42]		1.8 [.45]		1.9 [.47]		2.0 [.50]	
	RPM	W	RPM	W	RPM	W	RPM	W	RPM	W	RPM	W	RPM	W	RPM	W	RPM	W	RPM	W	RPM	W	RPM	W	RPM	W	RPM	W	RPM	W	RPM	W	RPM	W	RPM	W	RPM	W	RPM	W
6400 [3020]	—	—	—	—	—	—	—	—	—	—	652	2091	676	2222	699	2354	722	2487	745	2621	766	2756	788	2893	808	3031	829	3170	848	3311	868	3453	887	3595	906	3761	923	3902	937	4121
6600 [3114]	—	—	—	—	—	—	—	—	639	2074	663	2207	687	2341	710	2476	732	2613	754	2751	775	2890	796	3030	817	3172	837	3314	856	3458	875	3604	894	3750	912	3912	930	4056	944	4271
6800 [3209]	—	—	—	—	—	—	—	—	651	2194	674	2331	697	2468	720	2607	742	2747	764	2889	785	3031	805	3175	825	3321	845	3467	864	3614	883	3763	901	3913	919	4072	933	4283	950	4432
7000 [3303]	—	—	—	—	—	—	638	2184	662	2323	685	2463	708	2604	730	2747	752	2890	773	3035	794	3182	814	3329	834	3478	853	3628	872	3779	891	3931	908	4085	926	4240	940	4448	957	4603
7200 [3398]	—	—	—	—	—	—	650	2318	674	2460	697	2604	719	2749	741	2895	762	3042	783	3191	804	3340	824	3492	843	3644	862	3797	880	3952	898	4108	916	4265	932	4417	947	4624	964	4784
7400 [3492]	—	—	—	—	639	2315	662	2460	685	2606	708	2753	730	2902	752	3051	773	3202	793	3354	813	3508	833	3662	852	3818	871	3975	889	4134	906	4293	923	4454	938	4650	954	4810	971	4976
7600 [3586]	—	—	—	—	651	2462	674	2611	697	2760	719	2911	741	3063	762	3216	783	3371	803	3526	823	3683	842	3842	861	4001	879	4162	897	4324	914	4487	931	4651	945	4841	962	5007	978	5179
7800 [3681]	—	—	640	2467	664	2618	687	2770	709	2923	731	3077	752	3233	773	3390	794	3548	814	3707	833	3868	852	4029	870	4192	888	4357	906	4522	923	4689	936	4878	953	5043	969	5214	986	5392
8000 [3775]	630	2475	653	2628	676	2782	699	2937	721	3094	743	3252	764	3411	784	3572	804	3733	824	3896	843	4060	861	4226	880	4392	897	4560	914	4729	931	4900	944	5084	961	5255	977	5432	993	5616
8200 [3869]	643	2640	666	2797	689	2954	711	3114	733	3274	754	3435	775	3598	795	3762	815	3927	834	4094	853	4262	871	4431	889	4601	906	4772	923	4945	936	5130	952	5300	969	5477	985	5660	1001	5850
8400 [3964]	657	2814	680	2974	702	3136	724	3298	745	3462	766	3627	787	3794	807	3961	826	4130	845	4300	863	4471	881	4644	899	4818	915	4993	932	5169	944	5352	961	5528	977	5710	993	5899	1008	6094
8600 [4058]	671	2996	693	3160	715	3325	737	3491	758	3659	778	3827	798	3997	818	4169	837	4341	856	4515	874	4690	891	4866	908	5043	925	5222	937	5408	953	5584	969	5765	985	5954	1001	6148	—	—
8800 [4153]	684	3187	707	3355	728	3523	750	3693	770	3864	790	4036	810	4210	829	4385	848	4561	866	4738	884	4916	901	5096	918	5277	933	5434	946	5645	962	5826	978	6013	993	6208	1009	6408	—	—
9000 [4247]	698	3387	720	3558	742	3730	763	3903	783	4078	803	4254	822	4431	841	4609	859	4789	877	4969	895	5151	912	5335	928	5519	939	5712	955	5892	971	6079	986	6272	1002	6472	—	—	—	—
9200 [4341]	713	3595	734	3769	755	3945	776	4122	796	4300	815	4479	834	4660	853	4842	871	5025	888	5209	905	5395	922	5582	933	5784	949	5963	964	6149	980	6342	995	6541	1010	6747	—	—	—	—
9400 [4436]	727	3811	748	3989	769	4168	789	4349	808	4531	828	4714	846	4898	865	5083	882	5270	899	5458	916	5647	932	5838	942	6040	958	6225	973	6418	989	6616	1004	6821	—	—	—	—	—	—
9600 [4530]	741	4036	762	4218	782	4400	802	4585	821	4770	840	4956	859	5144	877	5333	894	5524	911	5715	927	5908	937	6122	952	6307	968	6498	983	6696	998	6901	—	—	—	—	—	—	—	—

NOTE: L-Drive left of bold line, M-Drive right of bold line.

Drive Package	L						M						N (field installed only)					
Motor H.P. [W]	5 [3728.5]						7.5 [5592.7]						7.5 [5592.7]					
Blower Sheave	BK130H						BK130H						BK120H					
Motor Sheave	1VP-56						1VP-71						1VP-71					
Turns Open	1	2	**3**	4	5	6	1	2	3	**4**	5	6	1	2	3	4	5	6
RPM	756	734	**709**	683	658	631	928	902	874	**847**	820	793	1009	981	955	928	899	870

NOTES:
1. Factory sheave settings are shown in bold type.
2. Do not set motor sheave below minimum or maximum turns open shown.
3. Re-adjustment of sheave required to achieve rated airflow at AHRI minimum External Static Pressure
4. Drive data shown is for horizontal airflow with dry coil. Add component resistance (below) to duct resistance to determine total External Static Pressure.

COMPONENT AIRFLOW RESISTANCE — 20 TON [70.3kW]

CFM [L/s]	6400 [3020]	6600 [3114]	6800 [3209]	7000 [3303]	7200 [3398]	7400 [3492]	7600 [3586]	7800 [3681]	8000 [3775]	8200 [3869]	8400 [3964]	8600 [4058]	8800 [4153]	9000 [4247]	9200 [4341]	9400 [4436]	9600 [4530]
	Resistance — Inches of Water [kPa]																
Wet Coil	0.00 [.00]	0.00 [.00]	0.00 [.00]	0.01 [.00]	0.01 [.00]	0.02 [.00]	0.02 [.00]	0.03 [.01]	0.03 [.01]	0.04 [.01]	0.04 [.01]	0.05 [.01]	0.05 [.01]	0.06 [.01]	0.06 [.01]	0.07 [.02]	0.07 [.02]
Downflow	0.06 [.01]	0.06 [.01]	0.07 [.02]	0.08 [.02]	0.08 [.02]	0.09 [.02]	0.10 [.02]	0.11 [.03]	0.12 [.03]	0.13 [.03]	0.14 [.03]	0.15 [.04]	0.16 [.04]	0.18 [.04]	0.19 [.05]	0.20 [.05]	0.22 [.05]
Downflow Economizer RA Damper Open	0.15 [.04]	0.16 [.04]	0.16 [.04]	0.17 [.04]	0.18 [.04]	0.19 [.05]	0.20 [.05]	0.21 [.05]	0.22 [.05]	0.23 [.06]	0.24 [.06]	0.25 [.06]	0.26 [.06]	0.27 [.07]	0.28 [.07]	0.29 [.07]	0.30 [.07]
Horizontal Economizer RA Damper Open	0.04 [.01]	0.05 [.01]	0.05 [.01]	0.06 [.01]	0.06 [.01]	0.07 [.02]	0.07 [.02]	0.08 [.02]	0.09 [.02]	0.09 [.02]	0.10 [.02]	0.10 [.02]	0.11 [.03]	0.11 [.03]	0.12 [.03]	0.12 [.03]	0.13 [.03]
Concentric Grill RXRN-AD86 & Transition RXMC-CK08	0.26 [.06]	0.29 [.07]	0.32 [.08]	0.35 [.09]	0.38 [.09]	0.41 [.10]	0.44 [.11]	0.47 [.12]	0.50 [.12]	0.53 [.13]	0.56 [.14]	0.59 [.15]	0.62 [.15]	0.65 [.16]	0.69 [.17]	0.72 [.18]	0.75 [.19]

AIRFLOW CORRECTION FACTORS — 20 TON [70.3kW]

CFM [L/s]	6400 [3020]	6600 [3114]	6800 [3209]	7000 [3303]	7200 [3398]	7400 [3492]	7600 [3586]	7800 [3681]	8000 [3775]	8200 [3869]	8400 [3964]	8600 [4058]	8800 [4153]	9000 [4247]	9200 [4341]	9400 [4436]	9600 [4530]
Total MBH	0.97	0.97	0.98	0.98	0.99	0.99	0.99	1.00	1.00	1.01	1.01	1.02	1.02	1.03	1.03	1.04	1.04
Sensible MBH	0.87	0.89	0.91	0.93	0.95	0.97	0.98	1.00	1.02	1.04	1.06	1.08	1.09	1.11	1.13	1.15	1.17
Power kW	0.98	0.99	0.99	0.99	0.99	1.00	1.00	1.00	1.00	1.00	1.01	1.01	1.01	1.01	1.02	1.02	1.02

NOTE: Multiply correction factor times gross performance data — resulting sensible capacity cannot exceed total capacity.

[ ] Designates Metric Conversions

IX. ELECTRICAL DATA - RKKL

ELECTRICAL DATA - RKKL SERIES										
		B180CL	**B180CM**	**B180DL**	**B180DM**	**B180YL**	**B180YM**	**B240CL**	**B240CM**	**B240CN**
Unit Information	Unit Operating Voltage Range	187-253	187-253	414-506	414-506	518-632	518-632	187-253	187-253	187-253
	Volts	208/230	208/230	460	460	575	575	208/230	208/230	208/230
	Minimum Circuit Ampacity	75/75	78/78	38	40	28	30	94/94	102/102	102/102
	Minimum Overcurrent Protection Device Size	90/90	90/90	45	45	30	35	110/110	110/110	110/110
	Maximum Overcurrent Protection Device Size	90/90	100/100	50	50	35	35	125/125	125/125	125/125
Compressor Motor	No.	2	2	2	2	2	2	2	2	2
	Volts	200/230	200/230	460	460	575	575	200/230	200/230	200/230
	Phase	3	3	3	3	3	3	3	3	3
	RPM	3450	3450	3450	3450	3450	3450	3450	3450	3450
	HP, Compressor 1	7	7	7	7	7	7	10	10	10
	Amps (RLA), Comp. 1	25/25	25/25	12.2	12.2	9	9	33.6/33.6	33.6/33.6	33.6/33.6
	Amps (LRA), Comp. 1	164/164	164/164	100	100	78	78	239/239	239/239	239/239
	HP, Compressor 2	6	6	6	6	6	6	8 1/2	8 1/2	8 1/2
	Amps (RLA), Comp. 2	25/25	25/25	12.8	12.8	9.6	9.6	30.1/30.1	30.1/30.1	30.1/30.1
	Amps (LRA), Comp. 2	164/164	164/164	100	100	78	78	225/225	225/225	225/225
Condenser Motor	No.	3	3	3	3	3	3	3	3	3
	Volts	208/230	208/230	460	460	575	575	208/230	208/230	208/230
	Phase	1	1	1	1	1	1	1	1	1
	HP	1/2	1/2	1/2	1/2	1/2	1/2	1/2	1/2	1/2
	Amps (FLA, each)	2.3/2.3	2.3/2.3	1.5	1.5	1	1	2.3/2.3	2.3/2.3	2.3/2.3
	Amps (LRA, each)	5.6/5.6	5.6/5.6	3.1	3.1	2.2	2.2	5.6/5.6	5.6/5.6	5.6/5.6
Evaporator Fan	No.	1	1	1	1	1	1	1	1	1
	Volts	208/230	208/230	460	460	575	575	208/230	208/230	208/230
	Phase	3	3	3	3	3	3	3	3	3
	HP	3	5	3	5	3	5	5	7 1/2	7 1/2
	Amps (FLA, each)	11.5/11.5	14.9/14.9	4.6	6.6	3.5	5.3	14.7/14.7	23.1/23.1	23.1/23.1
	Amps (LRA, each)	74.5/74.5	82.6/82.6	38.1	46.3	20	39.4	82.6/82.6	136/136	136/136

ELECTRICAL DATA - RKKL (continued)

ELECTRICAL DATA - RKKL SERIES							
		B240DL	**B240DM**	**B240DN**	**B240YL**	**B240YM**	**B240YN**
Unit Information	Unit Operating Voltage Range	414-506	414-506	414-506	518-632	518-6323	518-632
	Volts	460	460	460	575	575	575
	Minimum Circuit Ampacity	51	54	54	37	39	39
	Minimum Overcurrent Protection Device Size	60	60	60	440	45	45
	Maximum Overcurrent Protection Device Size	60	70	70	45	50	50
Compressor Motor	No.	2	2	2	2	2	2
	Volts	460	460	460	575	575	575
	Phase	3	3	3	3	3	3
	RPM	3450	3450	3450	3450	3450	3450
	HP, Compressor 1	10	10	10	10	10	10
	Amps (RLA), Comp. 1	17.9	17.9	17.9	12.8	12.8	12.8
	Amps (LRA), Comp. 1	125	125	125	80	80	80
	HP, Compressor 2	8 1/2	8 1/2	8 1/2	8 1/2	8 1/2	8 1/2
	Amps (RLA), Comp. 2	16.7	16.7	16.7	12.2	12.2	12.2
	Amps (LRA), Comp. 2	114	114	114	80	80	80
Condenser Motor	No.	3	3	3	3	3	3
	Volts	460	460	460	575	575	575
	Phase	1	1	1	1	1	1
	HP	1/2	1/2	1/2	1/2	1/2	1/2
	Amps (FLA, each)	1.5	1.5	1.5	1	1	1
	Amps (LRA, each)	3.1	3.1	3.1	2.2	2.2	2.2
Evaporator Fan	No.	1	1	1	1	1	1
	Volts	460	460	460	575	575	575
	Phase	3	3	3	3	3	3
	HP	5	7 1/2	7 1/2	5	7 1/2	7 1/2
	Amps (FLA, each)	6.6	9.6	9.6	5.3	7.8	7.8
	Amps (LRA, each)	46.3	67	67	39.4	53.8	53.8

X. TROUBLESHOOTING

FIGURE 24
COOLING TROUBLE SHOOTING CHART

⚠ WARNING

DISCONNECT ALL POWER TO UNIT BEFORE SERVICING. CONTACTOR MAY BREAK ONLY ONE SIDE. FAILURE TO SHUT OFF POWER CAN CAUSE ELECTRICAL SHOCK RESULTING IN PERSONAL INJURY OR DEATH.

SYMPTOM	POSSIBLE CAUSE	REMEDY
Unit will not run	• Power off or loose electrical connection • Thermostat out of calibration-set too high • Failed contactor • Blown fuses • Transformer defective • High pressure control open (if provided) • Interconnecting low voltage wiring damaged	• Check for correct voltage at compressor contactor in control box • Reset • Check for 24 volts at contactor coil - replace if contacts are open • Replace fuses • Check wiring-replace transformer • Reset-also see high head pressure remedy-The high pressure control opens at 610 PSIG • Replace thermostat wiring
Condenser fan runs, compressor doesn't	• Loose connection • Compressor stuck, grounded or open motor winding open internal overload. • Low voltage condition • Low voltage condition	• Check for correct voltage at compressor - check & tighten all connections • Wait at least 2 hours for overload to reset. If still open, replace the compressor. • At compressor terminals, voltage must be within 10% of rating plate volts when unit is operating. • Increase voltage
Insufficient cooling	• Improperly sized unit • Improper airflow • Incorrect refrigerant charge • Air, non-condensibles or moisture in system • Incorrect voltage	• Recalculate load • Check - should be approximately 400 CFM per ton. • Charge per procedure attached to unit service panel. • Recover refrigerant, evacuate & recharge, add filter drier • At compressor terminals, voltage must be within 10% of rating plate volts when unit is operating.
Compressor short cycles	• Incorrect voltage • Defective overload protector • Refrigerant undercharge	• At compressor terminals, voltage must be ± 10% of nameplate marking when unit is operating. • Replace - check for correct voltage • Add refrigerant
Registers sweat	• Low evaporator airflow	• Increase speed of blower or reduce restriction - replace air filter
High head pressure-low vapor pressures	• Restriction in liquid line, expansion device or filter drier • TXV does not open	• Remove or replace defective component • Replace TXV
High head pressure-high or normal vapor pressure - Cooling mode	• Dirty condenser coil • Refrigerant overcharge • Condenser fan not running • Air or non-condensibles in system	• Clean coil • Correct system charge • Repair or replace • Recover refrigerant, evacuate & recharge
Low head pressure-high vapor pressures	• Defective Compressor valves	• Replace compressor
Low vapor pressure - cool compressor - iced evaporator coil	• Low evaporator airflow • Operating below 65°F outdoors • Moisture in system	• Increase speed of blower or reduce restriction - replace air filter • Add Low Ambient Kit • Recover refrigerant - evacuate & recharge - add filter drier
High vapor pressure	• Excessive load • Defective compressor	• Recheck load calculation • Replace
Fluctuating head & vapor pressures	• TXV hunting • Air or non-condensibles in system	• Check TXV bulb clamp - check air distribution on coil - replace TXV • Recover refrigerant, evacuate & recharge
Gurgle or pulsing noise at expansion device or liquid line	• Air or non-condensibles in system	• Recover refrigerant, evacuate & recharge

FIGURE 25
FURNACE TROUBLESHOOTING GUIDE
(COMBINATION HEATING AND COOLING UNITS WITH DIRECT SPARK IGNITION)

⚠ WARNING

HAZARDOUS VOLTAGE LINE VOLTAGE CONNECTIONS

DISCONNECT POWER BEFORE SERVICING.
SERVICE MUST BE BY A TRAINED, QUALIFIED SERVICE TECHNICIAN.

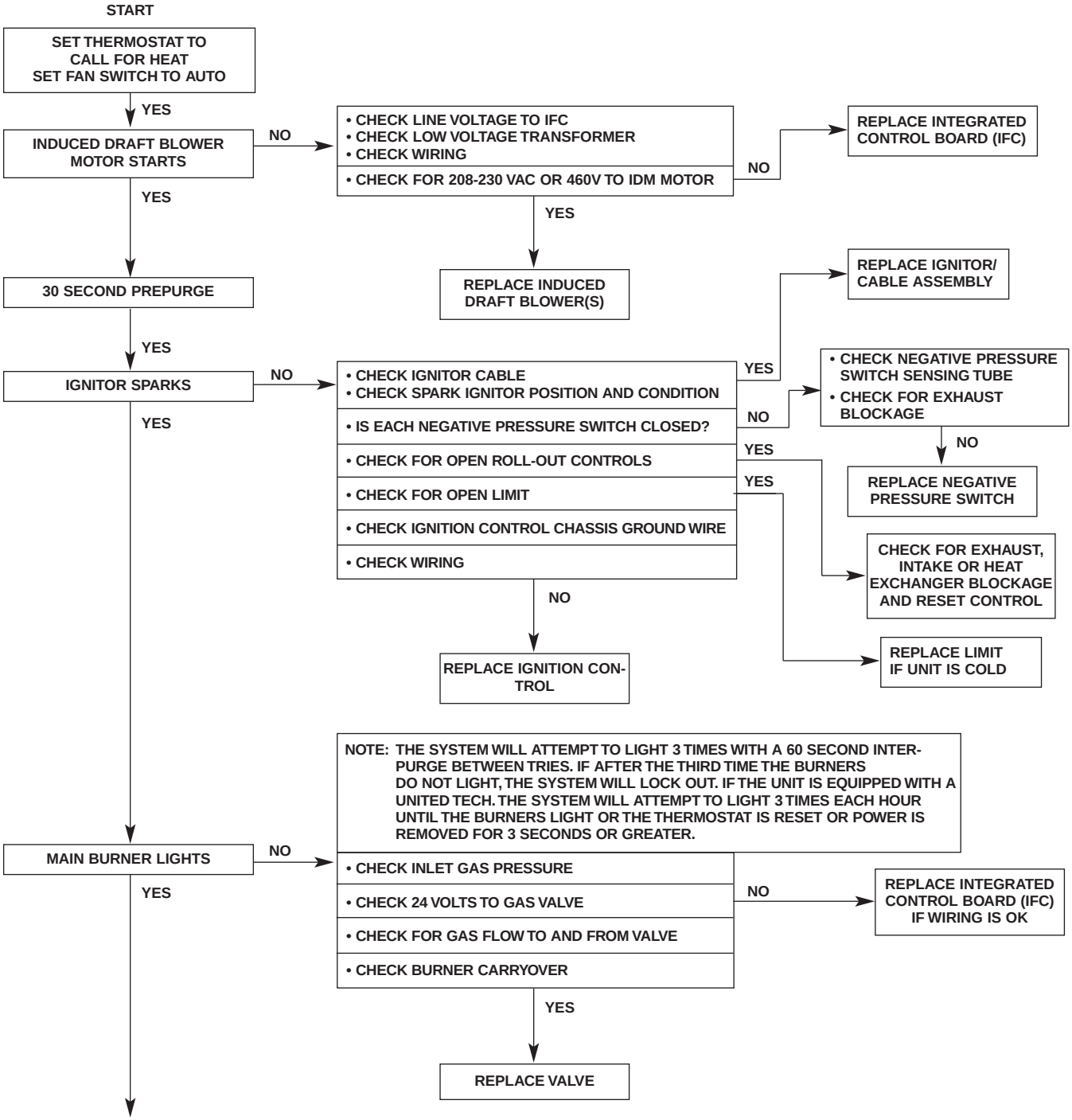

FLOW CHART CONTINUED ON NEXT PAGE

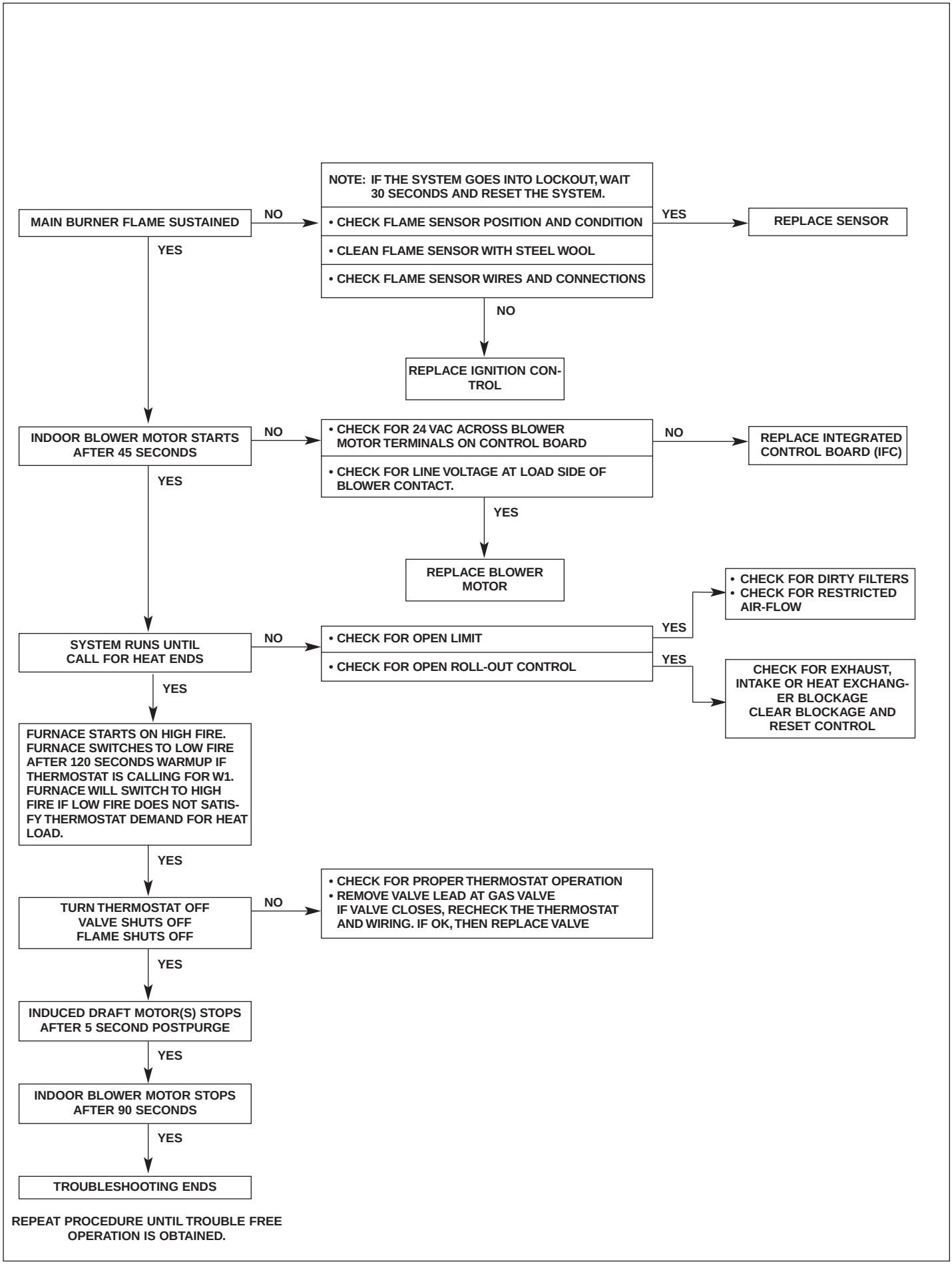
NOTE: IF THE SYSTEM GOES INTO LOCKOUT, WAIT 30 SECONDS AND RESET THE SYSTEM.
MAIN BURNER FLAME SUSTAINED
NO
• CHECK FLAME SENSOR POSITION AND CONDITION
YES
REPLACE SENSOR
• CLEAN FLAME SENSOR WITH STEEL WOOL
• CHECK FLAME SENSOR WIRES AND CONNECTIONS
YES
NO
REPLACE IGNITION CONTROL
INDOOR BLOWER MOTOR STARTS AFTER 45 SECONDS
NO
• CHECK FOR 24 VAC ACROSS BLOWER MOTOR TERMINALS ON CONTROL BOARD
NO
REPLACE INTEGRATED CONTROL BOARD (IFC)
• CHECK FOR LINE VOLTAGE AT LOAD SIDE OF BLOWER CONTACT.
YES
YES
REPLACE BLOWER MOTOR
• CHECK FOR DIRTY FILTERS
• CHECK FOR RESTRICTED AIR-FLOW
SYSTEM RUNS UNTIL CALL FOR HEAT ENDS
NO
• CHECK FOR OPEN LIMIT
YES
• CHECK FOR OPEN ROLL-OUT CONTROL
YES
CHECK FOR EXHAUST, INTAKE OR HEAT EXCHANGER BLOCKAGE CLEAR BLOCKAGE AND RESET CONTROL
YES
FURNACE STARTS ON HIGH FIRE. FURNACE SWITCHES TO LOW FIRE AFTER 120 SECONDS WARMUP IF THERMOSTAT IS CALLING FOR W1. FURNACE WILL SWITCH TO HIGH FIRE IF LOW FIRE DOES NOT SATISFY THERMOSTAT DEMAND FOR HEAT LOAD.
YES
TURN THERMOSTAT OFF VALVE SHUTS OFF FLAME SHUTS OFF
NO
• CHECK FOR PROPER THERMOSTAT OPERATION
• REMOVE VALVE LEAD AT GAS VALVE IF VALVE CLOSES, RECHECK THE THERMOSTAT AND WIRING. IF OK, THEN REPLACE VALVE
YES
INDUCED DRAFT MOTOR(S) STOPS AFTER 5 SECOND POSTPURGE
YES
INDOOR BLOWER MOTOR STOPS AFTER 90 SECONDS
YES
TROUBLESHOOTING ENDS
REPEAT PROCEDURE UNTIL TROUBLE FREE OPERATION IS OBTAINED.

XI. WIRING DIAGRAMS

FIGURE 26
RKKL SERIES

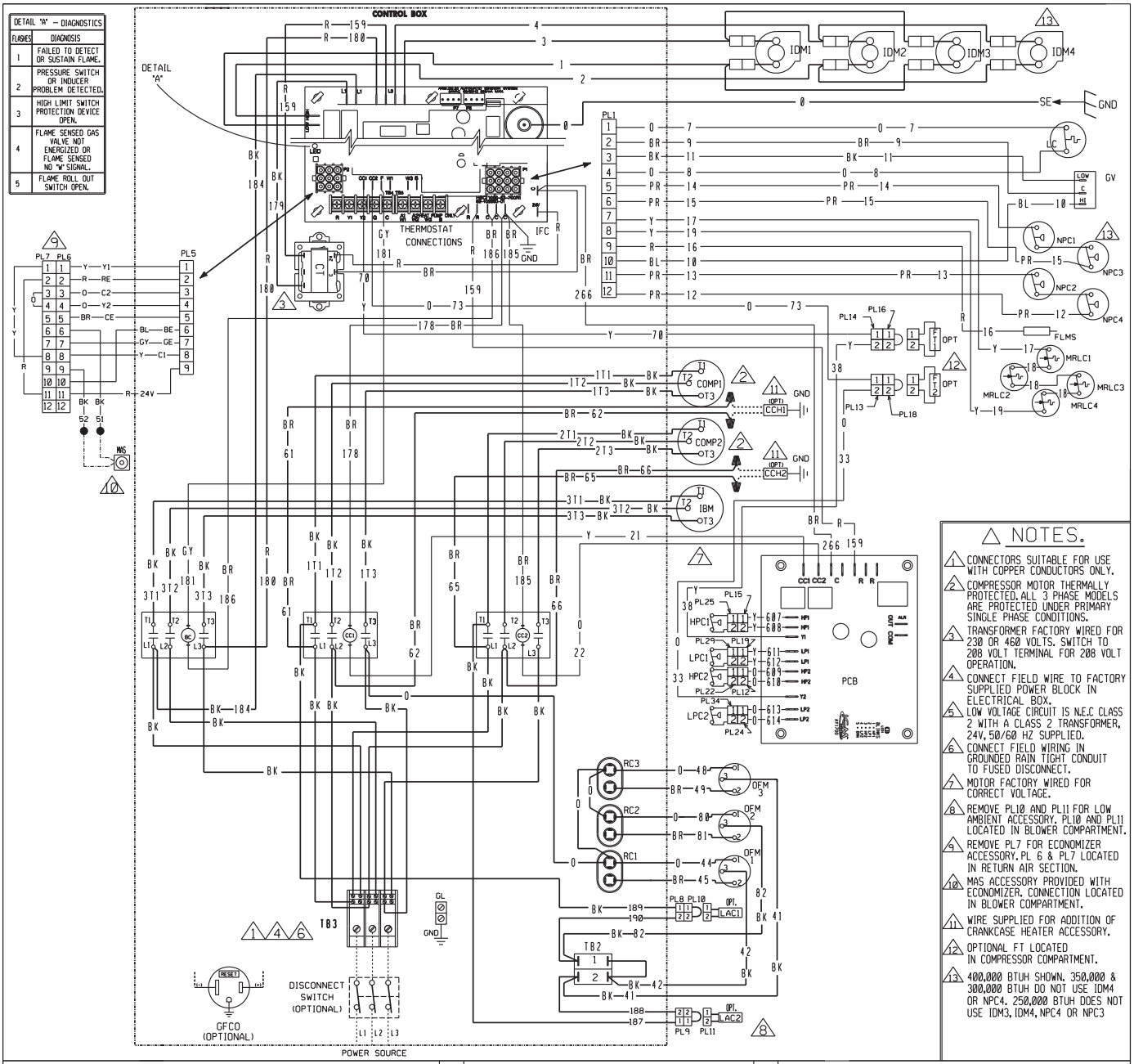

FIGURE 27
RKKL SERIES

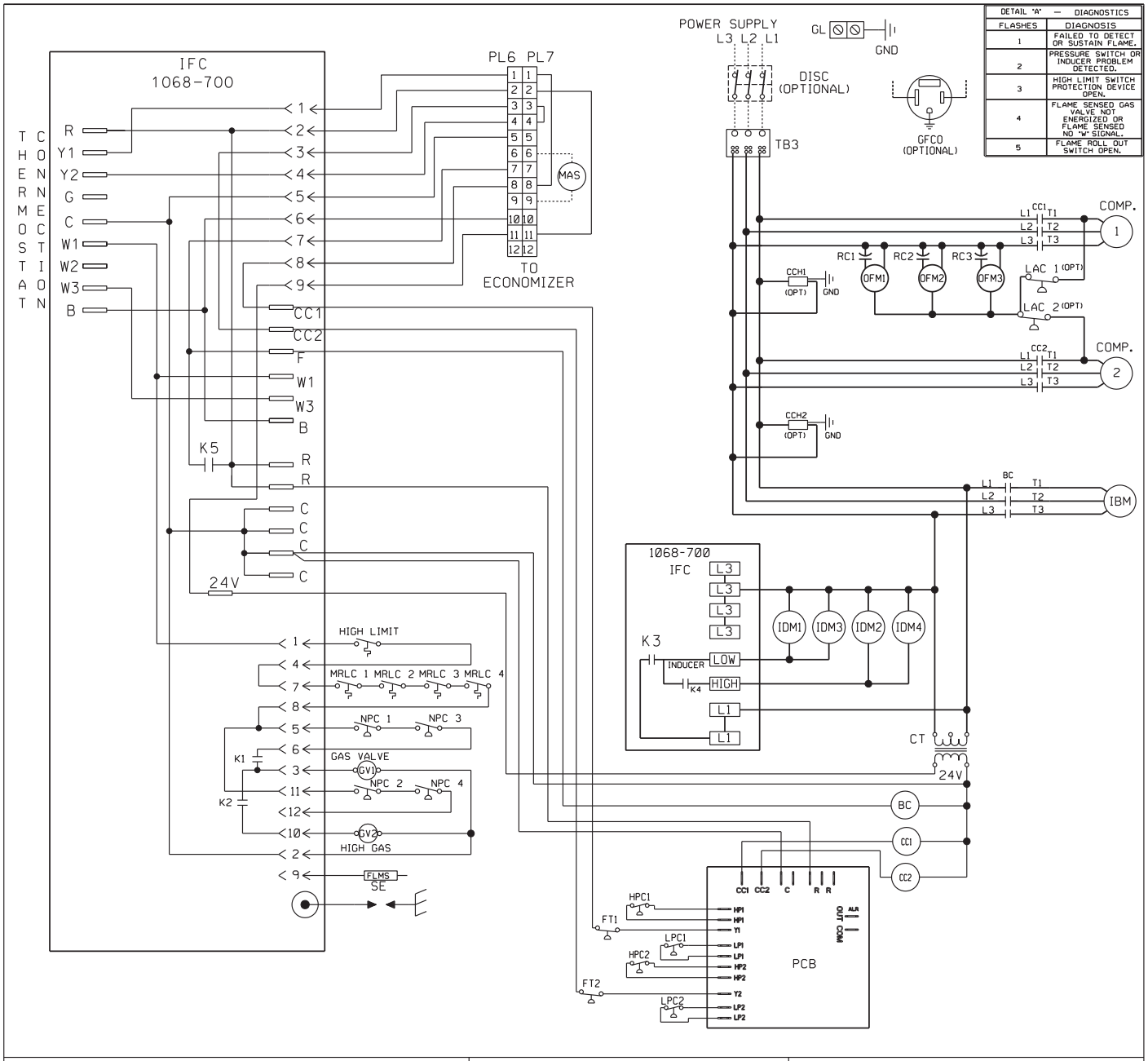

DETAIL "A" — DIAGNOSTICS	
FLASHES	DIAGNOSIS
1	FAILED TO DETECT OR SUSTAIN FLAME.
2	PRESSURE SWITCH OR INDUCER PROBLEM DETECTED.
3	HIGH LIMIT SWITCH PROTECTION DEVICE OPEN.
4	FLAME SENSED GAS VALVE NOT ENERGIZED OR FLAME SENSED NO "W" SIGNAL.
5	FLAME ROLL OUT SWITCH OPEN.

COMPONENT CODE

BC	BLOWER CONTACTOR	LPC	LOW PRESSURE CONTROL
CC	COMPRESSOR CONTACTOR	MAS	MIX AIR SENSOR
CCH	CRANKCASE HEATER	MRLC	MANUAL RESET LIMIT CONTROL
COMP	COMPRESSOR	NPC	NEGATIVE PRESSURE CONTROL
CT	CONTROL TRANSFORMER	OFM	OUTDOOR FAN MOTOR
DISC	DISCONNECT SWITCH	PCB	PRESSURE CONTROL BOARD
FLMS	FLAME SENSOR	PL	PLUG
FT	FREEZE STAT	RC	RUN CAPACITOR
GFCO	GROUND FAULT CONVENIENCE OUTLET	SE	SPARK ELECTRODE
		TB	TERMINAL BLOCK
GL	GROUND LUG		
GND	GROUND		
GV	GAS VALVE		
HPC	HIGH PRESSURE CONTROL		
IBM	INDOOR BLOWER MOTOR BELT DRIVE		
IDM	INDUCED DRAFT MOTOR		
IFC	INTEGRATED FURNACE CONTROL		
LC	LIMIT CONTROL		

WIRING INFORMATION

LINE VOLTAGE
- -FACTORY STANDARD
- -FACTORY OPTION
- -FIELD INSTALLED

LOW VOLTAGE
- -FACTORY STANDARD
- -FACTORY OPTION
- -FIELD INSTALLED

REPLACEMENT WIRE
- -MUST BE THE SAME SIZE AND TYPE OF INSULATION AS ORIGINAL (105° C MIN.)

WARNING
- -CABINET MUST BE PERMANENTLY GROUNDED AND CONFORM TO I.E.C., N.E.C., C.E.C., NATIONAL WIRING REGULATIONS, AND LOCAL CODES AS APPLICABLE.

WIRE COLOR CODE

BK	BLACK	O	ORANGE
BR	BROWN	PR	PURPLE
BL	BLUE	R	RED
G	GREEN	W	WHITE
GY	GRAY	Y	YELLOW

WIRING SCHEMATIC

RKKL-B180/240
208-230/460V, 3 PH, 60 HZ.
200-220/380-415V 3 PH, 50 HZ.
ROOFTOP

DR. BY	APP. BY	DATE	DWG. NO.	REV
MGR		8-2-12	90-42517-49	00

FIGURE 28
RKKL SERIES

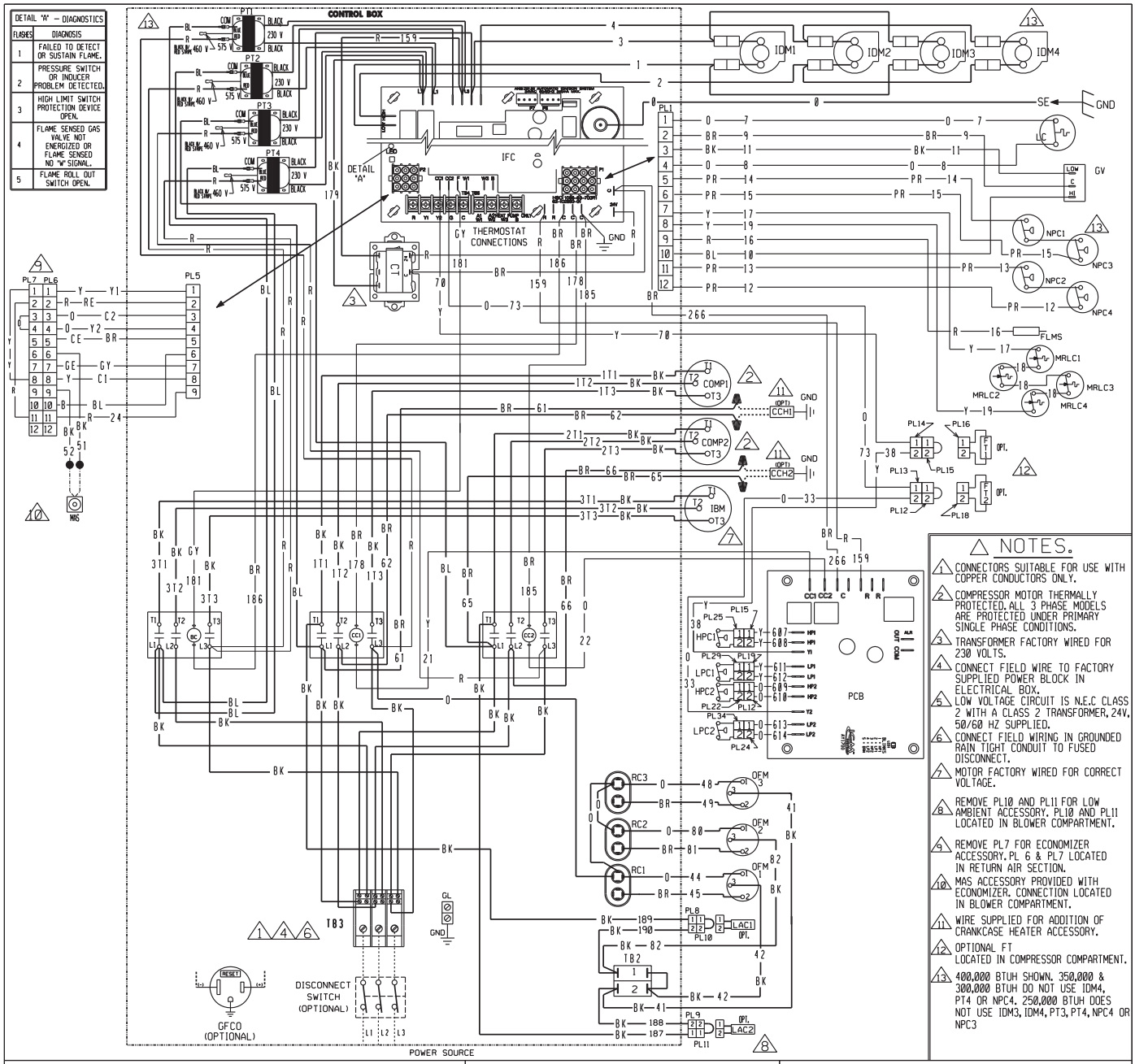

NOTES.

1. CONNECTORS SUITABLE FOR USE WITH COPPER CONDUCTORS ONLY.
2. COMPRESSOR MOTOR THERMALLY PROTECTED. ALL 3 PHASE MODELS ARE PROTECTED UNDER PRIMARY SINGLE PHASE CONDITIONS.
3. TRANSFORMER FACTORY WIRED FOR 230 VOLTS.
4. CONNECT FIELD WIRE TO FACTORY SUPPLIED POWER BLOCK IN ELECTRICAL BOX.
5. LOW VOLTAGE CIRCUIT IS N.E.C CLASS 2 WITH A CLASS 2 TRANSFORMER, 24V, 50/60 HZ SUPPLIED.
6. CONNECT FIELD WIRING IN GROUNDED RAIN TIGHT CONDUIT TO FUSED DISCONNECT.
7. MOTOR FACTORY WIRED FOR CORRECT VOLTAGE.
8. REMOVE PL10 AND PL11 FOR LOW AMBIENT ACCESSORY. PL10 AND PL11 LOCATED IN BLOWER COMPARTMENT.
9. REMOVE PL7 FOR ECONOMIZER ACCESSORY. PL 6 & PL7 LOCATED IN RETURN AIR SECTION.
10. MAS ACCESSORY PROVIDED WITH ECONOMIZER. CONNECTION LOCATED IN BLOWER COMPARTMENT.
11. WIRE SUPPLIED FOR ADDITION OF CRANKCASE HEATER ACCESSORY.
12. OPTIONAL FT LOCATED IN COMPRESSOR COMPARTMENT.
13. 400,000 BTUH SHOWN. 350,000 & 300,000 BTUH DO NOT USE IDM4, PT4 OR NPC4. 250,000 BTUH DOES NOT USE IDM3, IDM4, PT3, PT4, NPC4 OR NPC3

COMPONENT CODE

BC	BLOWER CONTACTOR
CC	COMPRESSOR CONTACTOR
CCH	CRANKCASE HEATER
COMP	COMPRESSOR
CT	CONTROL TRANSFORMER
DISC	DISCONNECT SWITCH
FLMS	FLAME SENSOR
FT	FREEZE STAT
GFCO	GROUND FAULT CONVENIENCE OUTLET
GL	GROUND LUG
GND	GROUND
GV	GAS VALVE
HPC	HIGH PRESSURE CONTROL
IBM	INDOOR BLOWER MOTOR BELT DRIVE
IDM	INDUCED DRAFT MOTOR
IFC	INTEGRATED FURNACE CONTROL
LAC	LOW AMBIENT COOLING CONTROL
LC	LIMIT CONTROL
LPC	LOW PRESSURE CONTROL
MAS	MIX AIR SENSOR
MRLC	MANUAL RESET LIMIT CONTROL
NPC	NEGATIVE PRESSURE CONTROL
OFM	OUTDOOR FAN MOTOR
PCB	PRESSURE CONTROL BOARD
PL	PLUG
PT	POWER TRANSFORMER
RC	RUN CAPACITOR
SE	SPARK ELECTRODE
TB	TERMINAL BLOCK
▲	WIRE NUT

WIRING INFORMATION

LINE VOLTAGE
- -FACTORY STANDARD
- -FACTORY OPTION
- -FIELD INSTALLED

LOW VOLTAGE
- -FACTORY STANDARD
- -FACTORY OPTION
- -FIELD INSTALLED

REPLACEMENT WIRE
- -MUST BE THE SAME SIZE AND TYPE OF INSULATION AS ORIGINAL (105 C°MIN.)

WARNING
- -CABINET MUST BE PERMANENTLY GROUNDED AND CONFORM TO I.E.C., N.E.C., C.E.C. AND LOCAL CODES AS APPLICABLE.

WIRE COLOR CODE

BK	BLACK	O	ORANGE
BR	BROWN	PR	PURPLE
BL	BLUE	R	RED
G	GREEN	W	WHITE
GY	GRAY	Y	YELLOW

WIRING DIAGRAM
RKKL-B180/240
575V 3 PH, 60 HZ.
ROOFTOP

DR. BY	APP. BY	DATE	DWG. NO.	REV
MGR		8-6-11	90-42517-50	00

FIGURE 29
RKKL SERIES

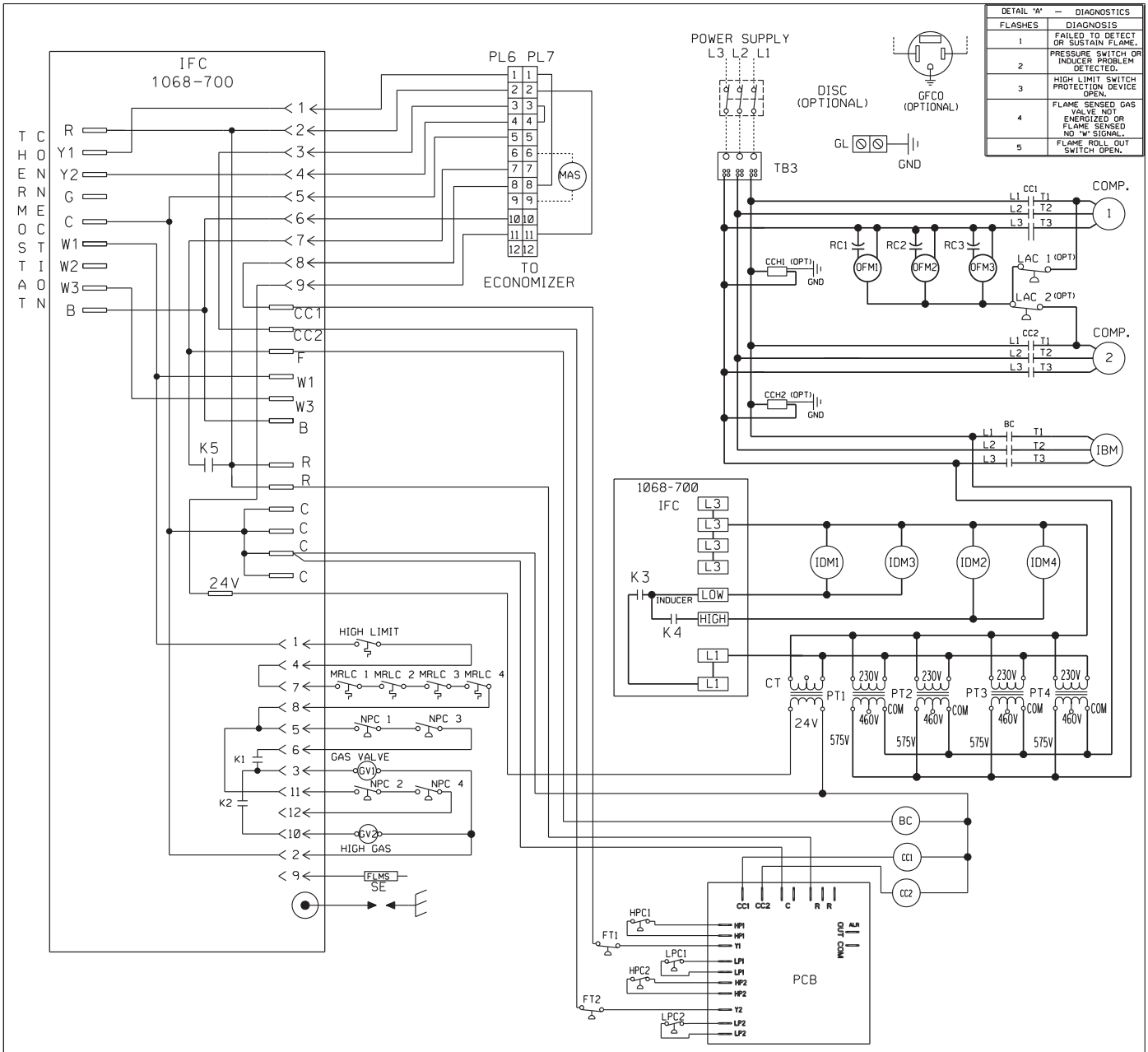

DETAIL "A" — DIAGNOSTICS	
FLASHES	DIAGNOSIS
1	FAILED TO DETECT OR SUSTAIN FLAME.
2	PRESSURE SWITCH OR INDUCER PROBLEM DETECTED.
3	HIGH LIMIT SWITCH PROTECTION DEVICE OPEN.
4	FLAME SENSED GAS VALVE NOT ENERGIZED OR FLAME SENSED NO "W" SIGNAL.
5	FLAME ROLL OUT SWITCH OPEN.

COMPONENT CODE

BC	BLOWER CONTACTOR	LPC	LOW PRESSURE CONTROL
CC	COMPRESSOR CONTACTOR	MAS	MIX AIR SENSOR
CCH	CRANKCASE HEATER	MRLC	MANUAL RESET LIMIT CONTROL
COMP	COMPRESSOR	NPC	NEGATIVE PRESSURE CONTROL
CT	CONTROL TRANSFORMER	OFM	OUTDOOR FAN MOTOR
DISC	DISCONNECT SWITCH	PCB	PRESSURE CONTROL BOARD
FLMS	FLAME SENSOR	PL	PLUG
FT	FREEZE STAT	PT	POWER TRANSFORMER
GFCO	GROUND FAULT CONVENIENCE OUTLET	RC	RUN CAPACITOR
		SE	SPARK ELECTRODE
GL	GROUND LUG	TB	TERMINAL BLOCK
GND	GROUND		
GV	GAS VALVE		
HPC	HIGH PRESSURE CONTROL		
IBM	INDOOR BLOWER MOTOR BELT DRIVE		
IDM	INDUCED DRAFT MOTOR		
IFC	INTEGRATED FURNACE CONTROL		
LC	LIMIT CONTROL		

WIRING INFORMATION

LINE VOLTAGE
- -FACTORY STANDARD
- -FACTORY OPTION
- -FIELD INSTALLED

LOW VOLTAGE
- -FACTORY STANDARD
- -FACTORY OPTION
- -FIELD INSTALLED

REPLACEMENT WIRE
- -MUST BE THE SAME SIZE AND TYPE OF INSULATION AS ORIGINAL (105° C MIN.)

WARNING
- -CABINET MUST BE PERMANENTLY GROUNDED AND CONFORM TO I.E.C., N.E.C., C.E.C., AND LOCAL CODES AS APPLICABLE.

WIRE COLOR CODE

BK	BLACK	O	ORANGE
BR	BROWN	PR	PURPLE
BL	BLUE	R	RED
G	GREEN	W	WHITE
GY	GRAY	Y	YELLOW

WIRING SCHEMATIC
RKKL-B180/240

575V, 3 PH, 60 HZ.
ROOFTOP

DR. BY	APP. BY	DATE	DWG. NO.	REV
MGR		8-14-12	90-42517-51	00

XII. CHARGE CHARTS

FIGURE 30

RKKL SYSTEM CHARGE CHARTS

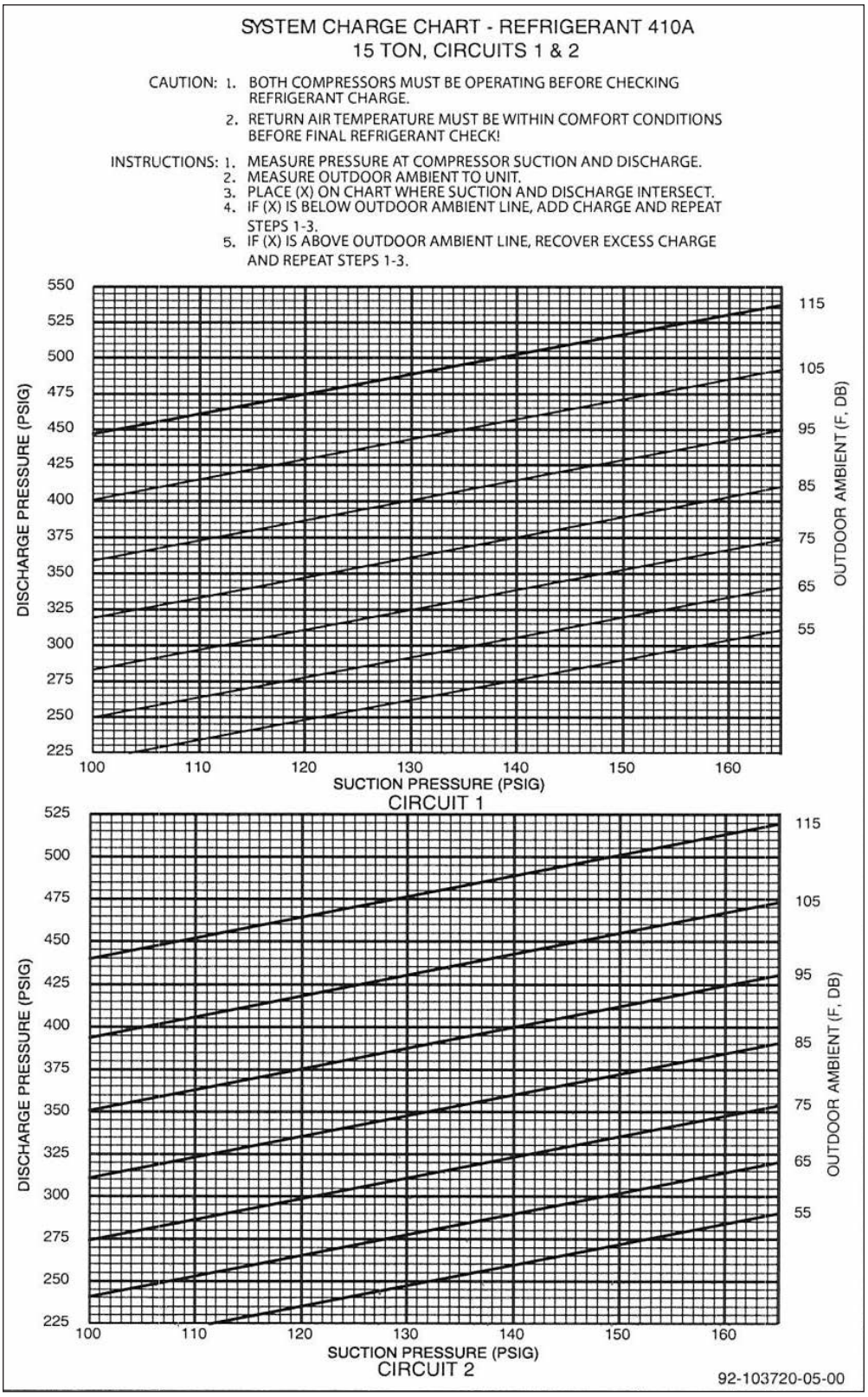

FIGURE 31

RKKL SYSTEM CHARGE CHARTS

SYSTEM CHARGE CHART - REFRIGERANT 410A
20 TON, CIRCUITS 1 & 2

CAUTION:
1. BOTH COMPRESSORS MUST BE OPERATING BEFORE CHECKING REFRIGERANT CHARGE.
2. RETURN AIR TEMPERATURE MUST BE WITHIN COMFORT CONDITIONS BEFORE FINAL REFRIGERANT CHECK!

INSTRUCTIONS:
1. MEASURE PRESSURE AT COMPRESSOR SUCTION AND DISCHARGE.
2. MEASURE OUTDOOR AMBIENT TO UNIT.
3. PLACE (X) ON CHART WHERE SUCTION AND DISCHARGE INTERSECT.
4. IF (X) IS BELOW OUTDOOR AMBIENT LINE, ADD CHARGE AND REPEAT STEPS 1-3.
5. IF (X) IS ABOVE OUTDOOR AMBIENT LINE, RECOVER EXCESS CHARGE AND REPEAT STEPS 1-3.

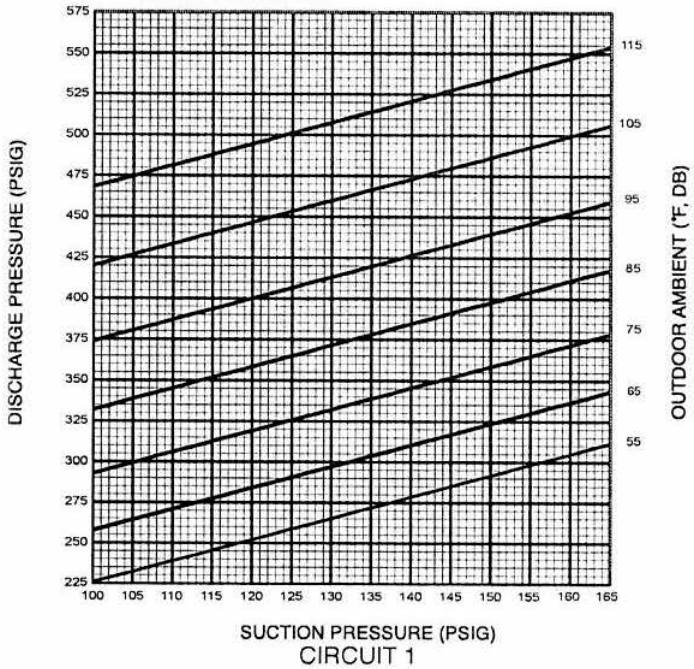

CIRCUIT 1

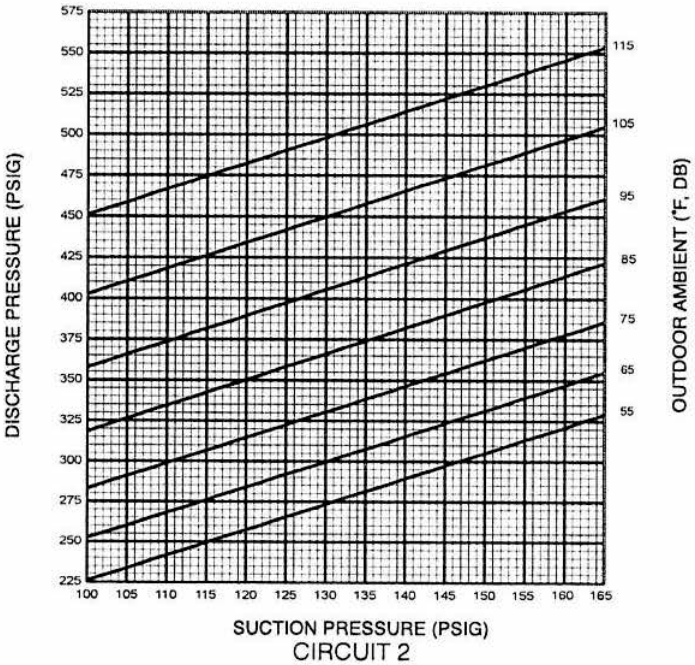

CIRCUIT 2

92-103720-02-00