The new degree of comfort.™

Commercial 7.5-10 Ton Renaissance™ Line Package Heat Pump

RHPDZT Commercial *Prestige*® Series

Nominal Sizes 7.5, 8.5 & 10 Tons
Standard VFD Technology
ASHRAE 90.1-2013 Compliant Models

RHPDZS Commercial *Classic Plus*® Series

Nominal Sizes 7.5, 8.5 & 10 Tons
Optional VFD Technology
ASHRAE 90.1-2007 Compliant Models
ASHRAE 90.1-2013 Compliant Models

FORM NO. P11-815 REV. 3

TABLE OF CONTENTS

Unit Features and Benefits 3-10
Model Number Identification 11
Options 12
Selection Procedure 13
General Data
  ZS Series 14-25
  ZT Series 26-30
General Data Notes 31
Gross Systems Performance Data
  ZS Series 32-37
  ZT Series 38-43
Airflow Performance Data 44-55
Electrical Data
  ZS Series 56-62
  ZT Series 63-65
Electric Heater Kits 66-76
Dimensional Data 77-79
Field Installed Accessories 80-102
Guide Specifications 103-108
Limited Warranty 109

	Single-Stage Cooling	Two-Stage Cooling	2018 DOE Efficiency Standards Compliant	2023 DOE Efficiency Standards Compliant	VFD Technology
Commercial Prestige® Series (RHPDZT)		X	X	X	X
Commercial Classic Plus® Series (RHPDZS)		X	X		X (Optional)

RHPD STANDARD FEATURES INCLUDE:

- Factory charged with R-410A HFC refrigerant
- Wired and run tested
- Scroll compressors with internal line break overload and high pressure protection
- Models RHPDZS and RHPDZT have two-stage compressor
- Convertible airflow – vertical down flow or horizontal side flow
- Forkable base rails for easy handling and lifting
- Cooling operation up to 125°F ambient
- MicroChannel evaporator and condenser coil
- PlusOne® ServiceSmart package includes:
  Qwik-Change Flex-Fit Rack
  Qwik-Slide Blower Assembly
  Qwik-Clean Drain Pan
- Overflow condensate sensor
- PlusOne® Diagnostics with Dual 7-Segment LED Display to meet code compliance
- One-piece top cover and base pan with drawn supply and return opening
- Two-piece control door
- ¼ turn fasteners on filter access door
- Color-coded and labeled wiring
- External lockable gauge ports
- TXV refrigerant metering system
- Solid-core liquid line filter drier
- High pressure and low pressure/loss of charge protection with built in Smart Logic
- Insulation encapsulated throughout entire unit
- High performance belt drive motor with variable pitch pulleys and quick adjust belt system
- Variable Frequency Drive (VFD) blower is standard on Model RHPDZT and optional on model RHPDZS
- New product footprint with matching connections
- Improved factory lead times

FACTORY INSTALLED OPTIONS:

- Louvered panels
- Hinged access doors
- Low ambient/freeze stat
- Non-powered convenience outlet
- Economizer (Title 24 and ASHRAE 90.1 2013 Compliant)
- Supply and return smoke detector
- Return smoke detector
- ElectroFin® E-Coat for Microchannel Condenser Coil
- ClearControl™ Direct Digital Control (DDC)
- Comfort Alert/Phase monitor
- Vertical economizer

FIELD INSTALLED ACCESSORY EQUIPMENT:

Accessory	Model Number	Factory Installation Available?
Economizer w/Single Enthalpy (Downflow)	RXRD-01MDDAM3	Yes
Economizer w/Single Enthalpy (Horizontal)	RXRD-01MDHAM3	No
Economizer-w/Single Enthalpy (Downflow) DDC	RXRD-01MDDBM3	Yes
Economizer w/Single Enthalpy (Horizontal) DDC	RXRD-01MDHBM3	No
Dual Enthalpy Kit	RXRX-BV01	No
Dual Enthalpy Kit DDC	RXRX-BV02	No
Carbon Dioxide Sensor (Wall Mount)	RXRX-AR02	No
Power Exhaust	RXRX-CDF01C	No
Power Exhaust	RXRX-CDF01D	No
Manual Fresh Air Damper	RXRF-ADA1	No
Motorized Fresh Air Damper	RXRF-ADB1	No
Motorized Fresh Air Damper (DDC)	RXRF-ADC1	No
Roofcurb, 14"	RXKG-DDD14	No
Roofcurb, 24"	RXKG-DDD24	No
Roofcurb Adapter	RXRX-DDCAE	No
Concentric Diffuser 7.5/8.5 Ton Flush	RXRN-AEF2000	No
Concentric Diffuser 10.0 Ton Flush	RXRN-AEF3415	No
Concentric Diffuser 12.5 Ton Flush	RXRN-AEF3618	No
Concentric Diffuser 7.5/8.5 Ton Drop	RXRN-AED2000	No
Concentric Diffuser 10.0 Ton Drop	RXRN-AED3415	No
Concentric Diffuser 12.5 Ton Drop	RXRN-AED3618	No
Concentric Adapter 7.5/8.5 Ton Drop	RXMC-DD01	No
Concentric Adapter 10 Ton Drop	RXMC-DD02	No
Concentric Adapter 12.5 Ton Drop	RXMC-DD03	No
Outdoor Coil Louver Kit - ACD/090/102/120	RXRX-ADD04A	Yes
Outdoor Coil Louver Kit - ACD150	RXRX-ADD04B	Yes
Unwired Convenience Outlet	RXRX-BN01	Yes
Unfused Service Disconnect	RXRX-BP01	Yes
Comfort Alert (1 Per Compressor)	RXRX-AZ01 DDC	Yes
Comfort Alert (1 Per Compressor)	RXRZ-AZ02	Yes
BACnet Communication Card	RXRX-AY01	No
LonWorks Communication Card	RXRX-AY02	No

*See single point wiring kit model nomenclature on page 82.
*Variable Frequency Drive Kit model nomenclature on page 82.

Accessory	Model Number	Factory Installation Available?
Room Humidity Sensor	RHC-ZNS4	No
Room Temperature and Relative Humidity Sensor	RHC-ZNS5	No
Low-Ambient Control Kit	RXRZ-A04	Yes
Freeze Stat Kit	RXRX-AM01	Yes
Variable Frequency Drive Kit* *See model number break down below	RXRX-AC02	No
	RXRX-AC03	No
	RXRX-AC05	No
	RXRX-AD02	No
	RXRX-AD03	No
	RXRX-AD05	No
	RXRX-CC02	No
	RXRX-CC03	No
	RXRX-CC05	No
	RXRX-CD02	No
	RXRX-CD03	No
	RXRX-CD05	No
Electric Heater Kits	RXJJ-DD10CP	Yes
	RXJJ-DD15CP	Yes
	RXJJ-DD20CP	Yes
	RXJJ-DD30CP	Yes
	RXJJ-DD40CP	Yes
	RXJJ-DD10DNV	Yes
	RXJJ-DD15DNV	Yes
	RXJJ-DD20DNV	Yes
	RXJJ-DD30DNV	Yes
	RXJJ-DD40DNV	Yes
Single Point Wiring Kit*	RXJX-AC0605	No
	RXJX-AC0805	No
	RXJX-AD0405	No
	RXJX-AD0605	No
	RXJX-AD0409	No
	RXJX-AC0909	No
	RXJX-AD0609	No

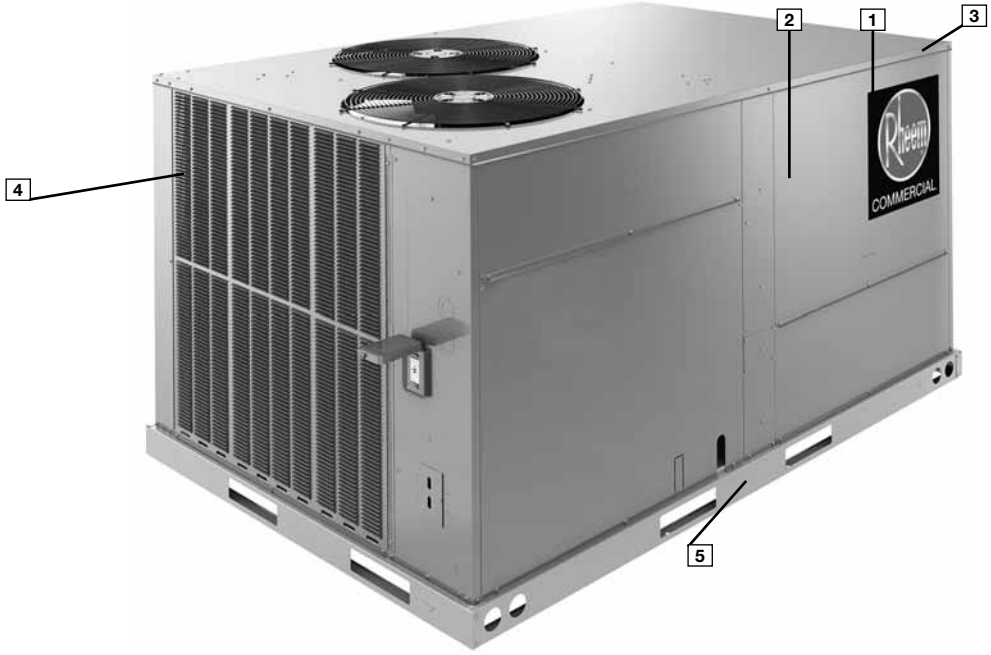

Cabinet and Foundation

Outwardly, the large *Rheem® Commercial Series* label **(1)** identifies the brand to the customer. The sheet-metal cabinet **(2)** uses 18-gauge material for structural components with an underlying coat of G90. To ensure the leak-proof integrity of these units, the design utilizes a one-piece top with a 1/8" drip lip **(3)** as well as gasket-protected panels and screws. The Rheem hail guard (optional) **(4)** sets the standard for coil protection in the industry. Electro deposition, baked-on enamel that is tested to withstand a rigorous 1000-hour salt spray test, per ASTM B117.

Anything built to last must start with the right foundation. Following that model, the foundation is comprised of 14-gauge, commercial-grade, full perimeter base rails **(5)** that integrate fork slots and rigging holes to save set-up time on the job site.

Easy Installation

The Renaissance line features a new footprint that simplifies the replacement process by eliminating the need for a new curb adapter and being able to match inlet, outlet and electrical connections of the most common/industry-standard configurations.

Base Pan

The base pan is stamped to form a 7/8" flange around the supply and return cover, which eliminates the worry of water entering the conditioned space **(6)**. All insulation is secured with both adhesive and mechanical fasteners, and all edges are hidden.

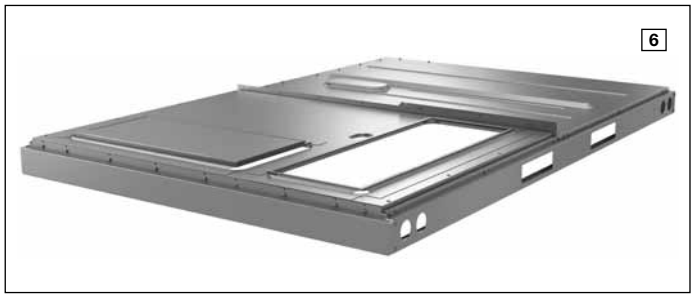

Drain Pan

The Qwik-Clean Drain Pan™ **(7)** is made from a composite material that resists the growth of harmful bacteria. With both side and center drain options, the drain pan slides out completely for easy cleaning. It also features a standard overflow switch.

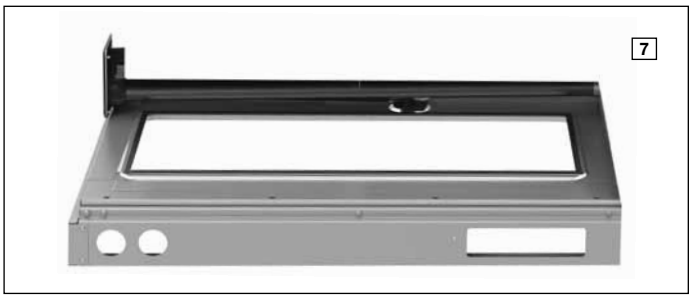

Test Standards

During development, each unit was tested to U.L. 1995, AHRI 340-360 as well as other Rheem-required reliability tests. Rheem adheres to stringent ISO 9002 quality procedures, and each unit bears the U.L. and AHRI certification labels located on the unit nameplate. Contractors can be assured that when a Rheem package unit arrives at the job, it is ready to go with a factory charge and quality checks. Each unit also proudly displays the "Made in the USA" designation.

Easy Access

All major compartments are easily accessible from the front of the unit: the electrical compartment, blower compartment, heating section, and outdoor section. Each compartment has mechanical fasteners. Panels are permanently embossed with the compartment name (e.g. control/filter access, blower access, and electric heat access). The filter compartment is accessed through a large, mechanically fastened panel. Information is readily available on the outside of the panel, with a nameplate that contains the model and serial numbers, electrical data, and other important unit information. Hinged access is available as an option for the electrical, blower, and filter compartments.

Charging Charts, Wiring Diagrams, & Labels

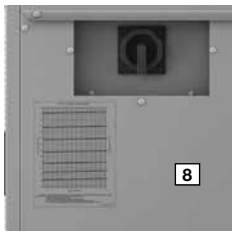

The unit charging chart is located on the outside of the compressor access panel. Electrical wiring diagrams are found on the control box cover, which allows contractors to move them to more readable locations. The model and serial numbers are located on the right of the control box. Having this information on the inside means easier model identification for the life of the product. The production line quality test assurance label is also placed in this location **(8)**.

Filter Rack

Located within the filter compartment, the Qwik-Change Flex-Fit Rack™ **(9)** allows easy changeover between 2" and 4" standard size and readily available filters.

Blower Assembly

Removing three screws provides full access to the blower compartment. Inside, the Qwik-Slide Blower Assembly™ **(10)** is incredibly easy to access and remove. This makes servicing internal components such as blower motor, TXV, and microchannel coil much easier. The entire assembly slides out by removing the 3/8" screws from the blower retention bracket. The adjustable motor pulley **(11)** can easily be adjusted by loosening the bolts on either side of the motor mount. Removing the bolts allows for easy removal of the blower pulley by pushing the blower assembly up to loosen the belt. Once the pulley is removed, the motor sheave can be adjusted to the desired number of turns, ranging from 0 to 6 turns open.

Where the demands for the job require high static, Rheem offers drives that deliver nominal airflow up to 2" of static. By referring to the airflow performance tables listed in the installation instructions, proper static pressure and CFM requirements can be dialed in. The scroll housing **(12)** and blower scroll provide quiet and efficient airflow. The blower sheave is secured by an “H” bushing that firmly secures the pulley to the blower shaft, resulting in years of trouble-free operation. The “H” bushing allows for easy removal of the blower pulley from the shaft. This is an improvement from a set screw, which can score the shaft and create burrs that make blower-pulley removal difficult.

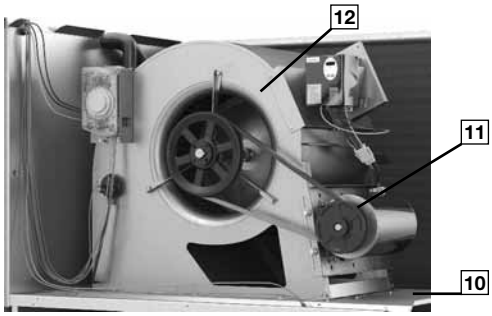

High and Low Pressure Switches & Freeze Stat

High pressure **(13)** and low pressure **(14)** switches are standard. They are located in the outdoor section along with the low-ambient control **(15)**. The optional Freeze Stat **(16)** (standard on models with ClearControl), is clipped onto the suction line in the blower compartment. The low ambient control allows the compressor to operate down to 0 degrees ambient temperature by cycling the outdoor fans on high pressure. The high-pressure switch shuts off the compressors if pressures exceeding 610 PSIG are detected. The low-pressure switch shuts off the compressors if low pressure is detected due to loss of charge. Built-in Smart Logic reduces nuisance calls by only shutting off compressors after the third detection. The freeze stat protects the compressor if the evaporator coil gets too cold (below freezing) due to low airflow.

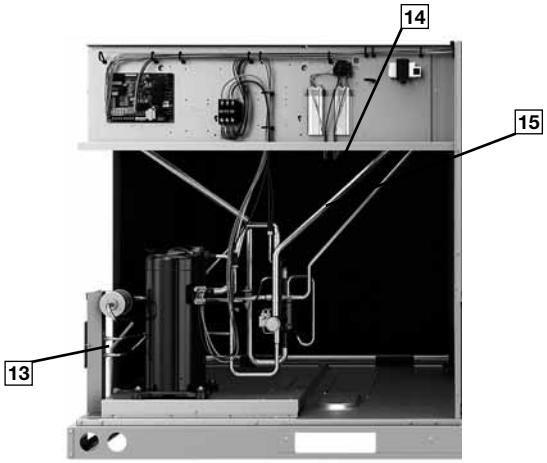

MicroChannel Evaporator & TXV

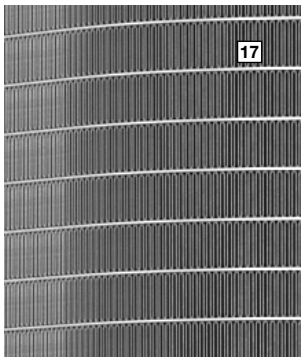

The Microchannel Evaporator **(17)** is accessible through the blower compartment, and through the filter rack, to simplify cleaning. The evaporator uses microchannel technology for maximum heat transfer, light weight, fewer manually brazed connections and reduced refrigerant charge. The TXV metering device maintains superheat over a wide range of varying temperatures optimizing unit performance for all conditions.

Control Box

Inside the control box **(18)**, each electrical component is clearly labeled; that label matches the component to the wire diagram for ease of trouble shooting. All wiring is numbered on each end of the termination and is color-coded to match the wiring diagram. The control transformer has a low voltage circuit breaker that trips if an electrical short occurs. There is a blower contactor and compressor contactor for each compressor.

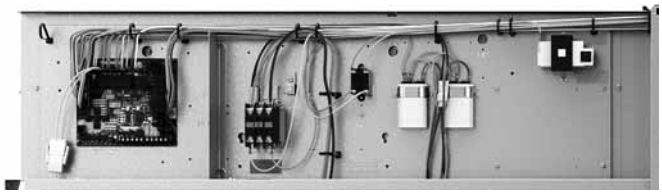

ClearControl™

The optional ClearControl™ system consisting of a rooftop unit controller, temperature sensors, and pressure sensors, allows real-time monitoring and communication between rooftop units. The Rooftop Unit Controller (RTU-C) that is factory mounted and wired into the control panel. The RTU-C is a solid-state, microprocessor-based control board that provides flexible control and extensive diagnostics for all unit functions. The RTU-C, using proportional/integral control algorithms, performs specific unit functions that govern unit operation in response to zone conditions, system temperatures, system pressures, ambient conditions, and electrical inputs. The RTU-C features a 16 x 2 character LCD display and a five-button keypad for local configuration and direct diagnosis of the system **(20)**. Features include a clogged filter switch (CFS), fan proving switch (FPS), return air temperature sensor (RAT), discharge air temperature sensor (DAT), and outdoor air temperature sensor (OAT). Freeze sensors (FS) are used in place of freeze stats to allow measurement of refrigerant suction line temperatures.

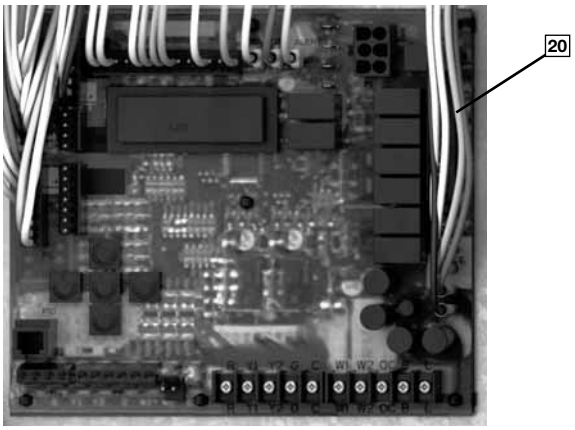

The RHPD with the RTU-C is specifically designed to be applied in four distinct applications:

1. **BACnet Communication —** The RHPD is compatible with a third party building management system that supports the BACnet Application Specific Controller device profile, with the use of a field installed BACnet Communication Module. The BACnet Communication Module plugs onto the unit RTU-C controller and allows communication between the RTU-C and the BACnet MSTP network. A zone sensor, a BACnet network zone sensor, a BACnet thermostat, or DDC controller may be used to send the zone temperature or thermostat demands to the RTU-C. The BACnet Communication Module is compatible with MSTP EIA-485 daisy chain networks communicating at 38.4 bps. It is compatible with twisted pair, shielded cables.

2. **LonWorks Communication —** The RHPD is compatible with a third party building management system that supports the LonMark Space Comfort Controller (SCC) functional profile or LonMark Discharge Air Controller (DAC) functional profile. This is accomplished with a field installed LonMark communication module. The LonMark Communication Module plugs onto the RTU-C controller and allows communication between the RTU-C and a LonWorks network. A zone sensor, a LonTalk network zone sensor, or a LonTalk thermostat or DDC controller may be used to send the zone temperature or thermostat demands to the RTU-C. The LonMark Communication Module utilizes an FTT-10A free topology transceiver communicating at 78.8 kbps. It is compatible with Echelon qualified, twisted pair cable, Belden 8471, or NEMA Level 4 cables. The module can communicate up to 1640 feet with no repeater. The LonWorks limit of 64 nodes per segment applies to this device.

3. **24V Thermostat Compatibility —** The RHPD is compatible with a programmable 24 volt thermostat. Connections are made via conventional thermostat screw terminals. Extensive unit status and diagnostics are displayed on the LCD screen of the RTU-C.

4. **Zone Sensor Compatibility —** The RHPD is compatible with a zone sensor and a mechanical or solid state time clock connected to the RTU-C. Extensive unit status and diagnostics are displayed on the LCD screen of the RTU-C.

ComfortAlert®

A factory or field installed Comfort Alert® **(21)** module is available for power phase-monitoring protection and additional compressor diagnostics. The alarms can be displayed on the RTU-C display, through the (BAS) network, or connected to the “L-Terminal” of a thermostat for notification.

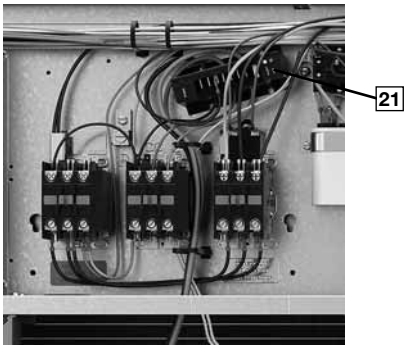

Variable Frequency Drive

The supply fan Variable Frequency Drive (VFD) **(22)** optimizes energy usage year round by providing a lower speed for first stage cooling operation, improving IEER's over the conventional constant fan system. Operating in the constant fan mode at the reduced speed can use as little as 1/5 of the energy of a conventional constant fan system. Also, by operating at a lower speed on first stage cooling, up to 126% more moisture is removed, improving comfort during low load operation. VFD comes standard in ZT models and is a factory or field installed option in ZS models. The VFD supply fan factory option meets California Title 24 and ASHRAE 90.1-2016 requirements for multi blower speed control. VFD also ramps up to the desired speed, reducing stress on the supply fan components and noise from a sudden inrush of air. Because the airflow is cut in half during first stage cooling and constant fan operation, noise is much less during these modes of operation.

Convenience Outlet

For added convenience in the field, factory-installed option of non-powered convenience outlet **(23)** is available. Low and high voltage can enter from the side or through the base. Low-voltage connections are made through the low-voltage terminal strip. For ease of access, the U.L.-required low voltage barrier can be temporarily removed for low-voltage termination and then reinstalled. The high-voltage connection is terminated at the number 1 compressor contactor.

External Lockable Gauge Ports

To the right left of the compressor compartment are the externally mounted lockable gauge ports. They are permanently identified by embossed lettering that identifies the compressor circuit, high pressure connection, **(24)** and low pressure connection **(25)**. Because the gauge ports are mounted externally, an accurate diagnostic of system operation can be performed without removing access panels. Brass caps on the Schrader fitting ensure the gauge parts are leak proof.

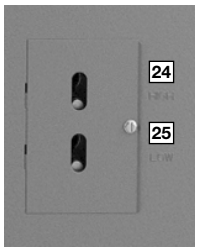

Compressor

The compressor compartment houses the heartbeat of the unit. The scroll compressor **(26)** is known for its long life and for reliable, quiet, and efficient operation. The suction and discharge lines are designed with shock loops **(27)** to absorb the strain and stress that the starting torque, steady state operation, and shut-down cycle impose on the refrigerant tubing. ZS and ZT units have two stages of efficient cooling operation in which the first stage is approximately 50% of second stage. Each unit comes standard with a filter dryer.

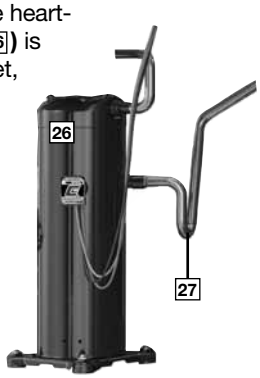

Condenser Fans

The condenser fan motors **(28)** can easily be accessed and maintained through the top of the unit. A down-mount fan provides corrosion protection and easy removal. The polarized plug connection allows the motor to be changed quickly and eliminates the need to snake wires through the unit.

MicroChannel Condenser Technology

The outdoor coil uses the latest microchannel technology **(29)** for the most effective method of heat transfer. The outdoor coil is protected by optional louvered panels, which allow unobstructed airflow while protecting the unit from both the environment and vandalism.

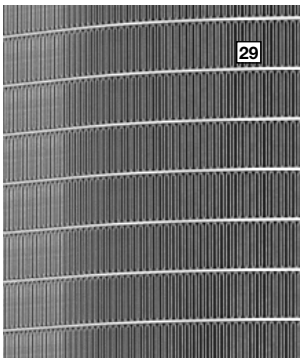

Coil Coating

Every unit offers the option of factory-applied E-Coat condenser coating **(30)** that delivers superior corrosion resistance for outdoor coils to operate in the harshest of environments.

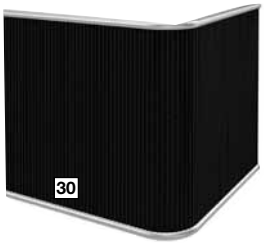

Economizer and Dampers

Each unit is designed for both down flow or horizontal applications **(31)** for job configuration flexibility. The return air compartment can also contain an economizer. Each unit is pre-wired for the economizer to allow quick, plug-in installation. Available as a factory-installed option, the economizer provides free cooling when outdoor conditions are suitable and also provides fresh air to meet local requirements. It comes standard with single enthalpy controls, which can be upgraded to dual enthalpy easily in the field. The direct drive actuator combined with gear drive dampers has eliminated the need for linkage adjustment in the field. The economizer control has a minimum position set point, an outdoor-air set point, a mixed-air set point, and a CO_2 set point. Barometric relief is standard on all economizers.

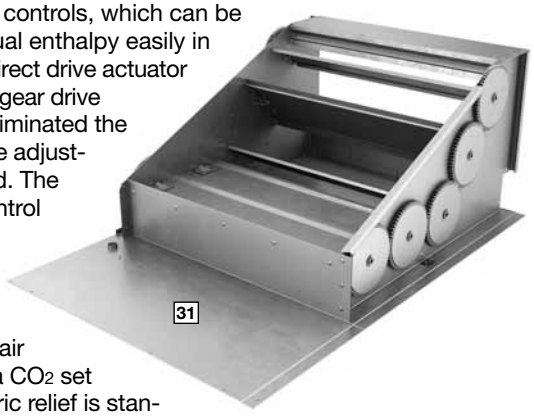

Power Exhaust is easily field-installed. The power exhaust is housed in the barometric relief opening and is easily slipped in with a plugin assembly. The wire harness to the economizer also has accommodations for a smoke detector.

The damper minimum position, actual damper position, power exhaust on/off set point, mixed air temperature limit set point, and Demand Controlled Ventilation (DCV) set point can be read and adjusted at the unit controller display or remotely through a network connection. The Space CO_2 level, mixed air temperature, and Economizer Status (free cooling available, single or dual enthalpy) can be read at the unit controller display or remotely through a network connection. Economizer faults will trigger a network alarm and can be read at the unit controller display or remotely through a network connection.

Roofcurb

The Rheem roofcurb **(32)** is made for tool-less assembly at the jobsite by engaging tabs in slots of adjacent curb sides, which makes the assembly process quick and easy.

R	HP	D	ZT	090	A	C	F	15	2	A	B	***
1	23	4	56	789	10	11	12	13 14	15	16	17	18 19 20

1—Brand
R = Rheem

2, 3—Unit Type
HP = Package Heat Pump

4—Cabinet Type
D = Medium Commercial

5, 6—Series
ZT[1] = Tier 1 *(Commercial Prestige® Series)*
ZS[2] = Tier 2 *(Commercial Classic Plus® Series)*

7, 8, 9—Capacity
090 = 7.5 ton
102 = 8.5 ton
120 = 10 ton

10—Major series
A

11—Voltage
C = 3 phase 208-230/60
D = 3 phase 460/60
Y = 3 phase 575/60

12—Drive
A = belt low static
B = belt med static
C = belt high static
F = belt VFD low static
G = belt VFD med static
H = belt VFD high static

13, 14—Heat Capacity
00 = No Heat
10 = 10kw
15 = 15kw
20 = 20kw
30 = 30kw
40 = 40kw

15—Number of stages
0 = no stages
1 = 1 stage
2 = 2 stage

16—Control
A = Non communicating
B = Comfort Alert/Phase Monitor
C = Clear Control
D = Clear Control & Comfort Alert

17—Minor series
B

18, 19, 20—Option Code
See next page

Notes:

1. ZT – can only select VFD drives (F, G, H) in character 12
2. ZS – can select any of the drive options in character 12

FACTORY INSTALLED OPTION CODES FOR RHPD (7.5 TO 10 TON)

18					19					20			
LV = Louver protection					LF = Low Ambient / Freeze Stat					EC = Economizer			
HA = Hinged Access					NP = Non-powered Convenience Outlet					SS = Supply Smoke			
CC[1]= Coil Coating										RS = Return Smoke			
Option code character highlighted below					Option code character highlighted below					Option code character highlighted below			
A	None				**A**	None				**0**	None		
B	LV				**B**	LF				**1**	EC		
C	HA				**C**	NP				**2**	RS		
D	LV	HA			**D**	LF	NP			**3**	EC	RS	
E	LV	CC								**4**	SS	RS	
F	LV	HA	CC							**5**	EC	SS	RS

[1]CC-requires LV (louver protection)

Instructions for Factory Installed Option(s) Selection

Note: Three characters following the model number will be utilized to designate a factory-installed option or combination of options. If no factory option(s) is required, “AAO” follows the model number.

- **Step 1:** In the table above, based on the desired features, choose option code character from highlighted options on the left side under the number 18. For example, the option code character “E” has Louver protection and Coil Coating.
- **Step 2:** In the table above, based on the desired features, choose option code character from highlighted options on the left side under the number 19. For example, the option code character “D” has Low Ambient / Freeze Stat and Non-powered convenience outlet.
- **Step 3:** In the table above, based on the desired features, choose option code character from highlighted options on the left side under the number 20. For example, the option code character “3” has Economizer and Return Smoke.
- The resulting option code from examples above is: “ED3”
- **Step 4:** Add your option code selection to the end of model number
  - Example: RHPDZS090ACC150AA ED3 = RHPDZS090ACC150AAED3

Base model Option code = Model number with option code

To select an RHPDZS Cooling and Heating unit to meet a job requirement, follow this procedure, with example, using data supplied in this specification sheet.

1. **DETERMINE COOLING AND HEATING REQUIREMENTS AND SPECIFIC OPERATING CONDITIONS FROM PLANS AND SPECS.**

   Example:

Voltage—	230 V – 3 Phase – 60 Hz
Total Cooling Capacity—	118,000 BTUH [34.57 kW]
Sensible Cooling Capacity—	79,600 BTUH [23.32 kW]
Heating Capacity—	150,000 BTUH [40 kW]
*Condenser Entering Air—	95°F [35.0°C] DB
*Evaporator Mixed Air Entering—	65°F [18.3°C] WB 78°F [25.6°C] DB
*Indoor Air Flow (vertical)—	3600 CFM [1699 L/s]
*External Static Pressure—	0.40 in. WG [.10 kPa]

2. **SELECT UNIT TO MEET COOLING REQUIREMENTS.**

   Since total cooling is within the range of a nominal 10 ton [35.1 kW] unit, enter cooling performance table at 95°F [35.0°C] DB condenser inlet air. Interpolate between 63°F [17.2°C] WB and 67°F [19.4°C] to determine total and sensible capacity and power input for 65°F [18.3°C] WB evaporator inlet air at 3750 CFM [1770 L/s] indoor air flow (table basis):

   Total Cooling Capacity = 118,900 BTUH [34.82 kW]
   Sensible Cooling Capacity = 99,950 BTUH [29.27 kW]
   Power Input (Compressor and Cond. Fans) = 8,950 watts

   Use formula [1.10 x CFM x (1 – DR) x (dbE – 80)] in note to determine sensible capacity at 80°F [26.7°C] DB evaporator entering air:

   99,950 + (1.10 x 3,600 x (1 – 0.03) x (78 – 80))
   Sensible Cooling Capacity = 92,268 BTUH [27.02 kW]

3. **CORRECT CAPACITIES OF STEP 2 FOR ACTUAL AIR FLOW.**

   Select factors from airflow correction table at 3600 CFM [1699 L/s] and apply to data obtained in step 2 to obtain gross capacity:

   Total Capacity = 118,900 x 0.98 = 116,522 BTUH [34.12 kW]
   Sensible Capacity = 92,268 x 0.95 = 87,655 BTUH [25.67 kW]
   Power Input = 8,950 x 0.99 = 8,861 Watts

   These are Gross Capacities, not corrected for blower motor heat or power.

4. **DETERMINE BLOWER SPEED AND WATTS TO MEET SYSTEM DESIGN.**

   Enter Indoor Blower performance table at 3600 CFM [1699 L/s]. Total ESP (external static pressure) per the spec of 0.40 in. WG [.10 kPa] includes the system duct and grilles. Add from the table "Component Air Resistance," 0.076 in. WG [.02 kPa] for wet coil, 0 in. WG [.00 kPa] for downflow air flow for a total selection static pressure of 0.476 (0.5) in. WG [.12 kPa], and determine:

   RPM = 771
   WATTS = 1,494
   DRIVE = A (Belt drive, low static)

5. **CALCULATE INDOOR BLOWER BTUH HEAT EFFECT FROM MOTOR WATTS, STEP 4.**

   1,576 x 3.412 = 5,377 BTUH [1.57 kW]

6. **CALCULATE NET COOLING CAPACITIES, EQUAL TO GROSS CAPACITY, STEP 3, MINUS INDOOR BLOWER MOTOR HEAT.**

   Net Total Capacity = 116,522 – 5,377 = 111,145 BTUH [32.54 kW]

   Net Sensible Capacity = 87,655 – 5,377 = 82,278 BTUH [24.09 kW]

7. **CALCULATE UNIT INPUT AND JOB EER.**

   Total Power Input = 8,861 (step 3) + 1,576 (step 4) = 10,437 Watts

   $$\text{EER} = \frac{\text{Net Total BTUH [kW] (step 6)}}{\text{Power Input, Watts (above)}} = \frac{111{,}145}{10{,}437} = 10.65$$

8. **SELECT UNIT HEATING CAPACITY.**

   From Heater Kit Table select kW to meet heating capacity requirement; multiply kW x 3412 to convert to BTUH.

   Use 40 kW Heater Kit

Heater Kit Model:	Heater Kit Capacity:
RXXJJ-DD40CP	135,120 BTUH [39.6 kW]

   Add indoor blower heat effect (step 5) to Heater Kit Capacity to get total heating capacity:

   135,120 + 5,377 = 140,497 BTUH [41.1 kW]

9. **CHOOSE MODEL** RHPDZS120ACA402AA.

*NOTE: These operating conditions are typical of a commercial application in a 95°F/79°F [35°C/26°C] design area with indoor design of 76°F [24°C] DB and 50% RH and 10% ventilation air, with the unit roof mounted and centered on the zone it conditions by ducts.

[ ] Designates Metric Conversions

NOM. SIZES 7.5-10 TONS [26.4-35.1 kW] ASHRAE 90.1-2007 COMPLIANT MODELS

Model RHPDZS Series	090ACA	090ACB	090ACC	090ACF
Cooling Performance[1]				CONTINUED →
Gross Cooling Capacity Btu [kW]	89,000 [26.08]	89,000 [26.08]	89,000 [26.08]	89,000 [26.08]
EER/SEER[2]	11/NA	11/NA	11/NA	11/NA
Nominal CFM/AHRI Rated CFM [L/s]	3000/3030 [1416/1430]	3000/3030 [1416/1430]	3000/3030 [1416/1430]	3000/3030 [1416/1430]
AHRI Net Cooling Capacity Btu [kW]	86,000 [25.2]	86,000 [25.2]	86,000 [25.2]	86,000 [25.2]
Net Sensible Capacity Btu [kW]	62,800 [18.4]	62,800 [18.4]	62,800 [18.4]	62,800 [18.4]
Net Latent Capacity Btu [kW]	23,200 [6.8]	23,200 [6.8]	23,200 [6.8]	23,200 [6.8]
IEER[3]	12.2	12.2	12.2	12.2
Net System Power kW	7.55	7.55	7.55	7.55
Heating Performance (Heat Pumps)				
High Temp. Btuh [kW] Rating	86,000 [25.2]	86,000 [25.2]	86,000 [25.2]	86,000 [25.2]
System Power KW / COP	6.84/3.3	6.84/3.3	6.84/3.3	6.84/3.3
Low Temp. Btuh [kW] Rating	48,000 [14.06]	48,000 [14.06]	48,000 [14.06]	48,000 [14.06]
System Power KW / COP	6.44/2.3	6.44/2.3	6.44/2.3	6.44/2.3
Compressor				
No./Type	1/Scroll	1/Scroll	1/Scroll	1/Scroll
Outdoor Sound Rating (dB)[4]	88	88	88	88
Outdoor Coil - Fin Type	Louvered	Louvered	Louvered	Louvered
Tube Type	MicroChannel	MicroChannel	MicroChannel	MicroChannel
MicroChannel Depth in. [mm]	1 [25.4]	1 [25.4]	1 [25.4]	1 [25.4]
Face Area sq. ft. [sq. m]	22.8 [2.12]	22.8 [2.12]	22.8 [2.12]	22.8 [2.12]
Rows / FPI [FPcm]	1 / 16 [6]	1 / 16 [6]	1 / 16 [6]	1 / 16 [6]
Refrigerant Control	TX Valves	TX Valves	TX Valves	TX Valves
Indoor Coil - Fin Type	Louvered	Louvered	Louvered	Louvered
Tube Type	MicroChannel	MicroChannel	MicroChannel	MicroChannel
MicroChannel Depth in. [mm]	1.26 [32]	1.26 [32]	1.26 [32]	1.26 [32]
Face Area sq. ft. [sq. m]	10.9 [1.01]	10.9 [1.01]	10.9 [1.01]	10.9 [1.01]
Rows / FPI [FPcm]	1 / 20 [8]	1 / 20 [8]	1 / 20 [8]	1 / 20 [8]
Refrigerant Control	TX Valves	TX Valves	TX Valves	TX Valves
Drain Connection No./Size in. [mm]	1/0.75 [19.05]	1/0.75 [19.05]	1/0.75 [19.05]	1/0.75 [19.05]
Outdoor Fan - Type	Propeller	Propeller	Propeller	Propeller
No. Used/Diameter in. [mm]	2/24 [609.6]	2/24 [609.6]	2/24 [609.6]	2/24 [609.6]
Drive Type/No. Speeds	Direct/1	Direct/1	Direct/1	Direct/1
CFM [L/s]	8000 [3775]	8000 [3775]	8000 [3775]	8000 [3775]
No. Motors/HP	2 at 1/2 HP	2 at 1/2 HP	2 at 1/2 HP	2 at 1/2 HP
Motor RPM	1075	1075	1075	1075
Indoor Fan - Type	FC Centrifugal	FC Centrifugal	FC Centrifugal	FC Centrifugal
No. Used/Diameter in. [mm]	1/15x15 [381x381]	1/15x15 [381x381]	1/15x15 [381x381]	1/15x15 [381x381]
Drive Type	Belt (Adjustable)	Belt (Adjustable)	Belt (Adjustable)	Belt (Adjustable)
No. Speeds	Single	Single	Single	Single
No. Motors	1	1	1	1
Motor HP	2	3	3	2
Motor RPM	1725	1725	1725	1725
Motor Frame Size	56	56	56	56
Filter - Type	Disposable	Disposable	Disposable	Disposable
Furnished	Yes	Yes	Yes	Yes
(NO.) Size Recommended in. [mm x mm x mm]	(4)2x20x20 [51x508x508]	(4)2x20x20 [51x508x508]	(4)2x20x20 [51x508x508]	(4)2x20x20 [51x508x508]
Refrigerant Charge Oz. [g]	179 [5075]	179 [5075]	179 [5075]	179 [5075]
Weights				
Net Weight lbs. [kg]	775 [352]	785 [356]	786 [357]	775 [352]
Ship Weight lbs. [kg]	814 [369]	824 [374]	825 [374]	814 [369]

See Page 31 for Notes.

[ ] Designates Metric Conversions

NOM. SIZES 7.5-10 TONS [26.4-35.1 kW] ASHRAE 90.1-2007 COMPLIANT MODELS

Model RHPDZS Series	090ACG	090ACH	090ADA	090ADB
Cooling Performance[1]				CONTINUED →
Gross Cooling Capacity Btu [kW]	89,000 [26.08]	89,000 [26.08]	89,000 [26.08]	89,000 [26.08]
EER/SEER[2]	11/NA	11/NA	11/NA	11/NA
Nominal CFM/AHRI Rated CFM [L/s]	3000/3030 [1416/1430]	3000/3030 [1416/1430]	3000/3030 [1416/1430]	3000/3030 [1416/1430]
AHRI Net Cooling Capacity Btu [kW]	86,000 [25.2]	86,000 [25.2]	86,000 [25.2]	86,000 [25.2]
Net Sensible Capacity Btu [kW]	62,800 [18.4]	62,800 [18.4]	62,800 [18.4]	62,800 [18.4]
Net Latent Capacity Btu [kW]	23,200 [6.8]	23,200 [6.8]	23,200 [6.8]	23,200 [6.8]
IEER[3]	12.2	12.2	12.2	12.2
Net System Power kW	7.55	7.55	7.55	7.55
Heating Performance (Heat Pumps)				
High Temp. Btuh [kW] Rating	86,000 [25.2]	86,000 [25.2]	86,000 [25.2]	86,000 [25.2]
System Power KW / COP	6.84/3.3	6.84/3.3	6.84/3.3	6.84/3.3
Low Temp. Btuh [kW] Rating	48,000 [14.06]	48,000 [14.06]	48,000 [14.06]	48,000 [14.06]
System Power KW / COP	6.44/2.3	6.44/2.3	6.44/2.3	6.44/2.3
Compressor				
No./Type	1/Scroll	1/Scroll	1/Scroll	1/Scroll
Outdoor Sound Rating (dB)[4]	88	88	88	88
Outdoor Coil - Fin Type	Louvered	Louvered	Louvered	Louvered
Tube Type	MicroChannel	MicroChannel	MicroChannel	MicroChannel
MicroChannel Depth in. [mm]	1 [25.4]	1 [25.4]	1 [25.4]	1 [25.4]
Face Area sq. ft. [sq. m]	22.8 [2.12]	22.8 [2.12]	22.8 [2.12]	22.8 [2.12]
Rows / FPI [FPcm]	1 / 16 [6]	1 / 16 [6]	1 / 16 [6]	1 / 16 [6]
Refrigerant Control	TX Valves	TX Valves	TX Valves	TX Valves
Indoor Coil - Fin Type	Louvered	Louvered	Louvered	Louvered
Tube Type	MicroChannel	MicroChannel	MicroChannel	MicroChannel
MicroChannel Depth in. [mm]	1.26 [32]	1.26 [32]	1.26 [32]	1.26 [32]
Face Area sq. ft. [sq. m]	10.9 [1.01]	10.9 [1.01]	10.9 [1.01]	10.9 [1.01]
Rows / FPI [FPcm]	1 / 20 [8]	1 / 20 [8]	1 / 20 [8]	1 / 20 [8]
Refrigerant Control	TX Valves	TX Valves	TX Valves	TX Valves
Drain Connection No./Size in. [mm]	1/0.75 [19.05]	1/0.75 [19.05]	1/0.75 [19.05]	1/0.75 [19.05]
Outdoor Fan - Type	Propeller	Propeller	Propeller	Propeller
No. Used/Diameter in. [mm]	2/24 [609.6]	2/24 [609.6]	2/24 [609.6]	2/24 [609.6]
Drive Type/No. Speeds	Direct/1	Direct/1	Direct/1	Direct/1
CFM [L/s]	8000 [3775]	8000 [3775]	8000 [3775]	8000 [3775]
No. Motors/HP	2 at 1/2 HP	2 at 1/2 HP	2 at 1/2 HP	2 at 1/2 HP
Motor RPM	1075	1075	1075	1075
Indoor Fan - Type	FC Centrifugal	FC Centrifugal	FC Centrifugal	FC Centrifugal
No. Used/Diameter in. [mm]	1/15x15 [381x381]	1/15x15 [381x381]	1/15x15 [381x381]	1/15x15 [381x381]
Drive Type	Belt (Adjustable)	Belt (Adjustable)	Belt (Adjustable)	Belt (Adjustable)
No. Speeds	Single	Single	Single	Single
No. Motors	1	1	1	1
Motor HP	3	3	2	3
Motor RPM	1725	1725	1725	1725
Motor Frame Size	56	56	56	56
Filter - Type	Disposable	Disposable	Disposable	Disposable
Furnished	Yes	Yes	Yes	Yes
(NO.) Size Recommended in. [mm x mm x mm]	(4)2x20x20 [51x508x508]	(4)2x20x20 [51x508x508]	(4)2x20x20 [51x508x508]	(4)2x20x20 [51x508x508]
Refrigerant Charge Oz. [g]	179 [5075]	179 [5075]	179 [5075]	179 [5075]
Weights				
Net Weight lbs. [kg]	785 [356]	786 [357]	775 [352]	785 [356]
Ship Weight lbs. [kg]	824 [374]	825 [374]	814 [369]	824 [374]

See Page 31 for Notes.

[ ] Designates Metric Conversions

NOM. SIZES 7.5-10 TONS [26.4-35.1 kW] ASHRAE 90.1-2007 COMPLIANT MODELS

Model RHPDZS Series	090ADC	090ADF	090ADG	090ADH
Cooling Performance[1]				CONTINUED →
Gross Cooling Capacity Btu [kW]	89,000 [26.08]	89,000 [26.08]	89,000 [26.08]	89,000 [26.08]
EER/SEER[2]	11/NA	11/NA	11/NA	11/NA
Nominal CFM/AHRI Rated CFM [L/s]	3000/3030 [1416/1430]	3000/3030 [1416/1430]	3000/3030 [1416/1430]	3000/3030 [1416/1430]
AHRI Net Cooling Capacity Btu [kW]	86,000 [25.2]	86,000 [25.2]	86,000 [25.2]	86,000 [25.2]
Net Sensible Capacity Btu [kW]	62,800 [18.4]	62,800 [18.4]	62,800 [18.4]	62,800 [18.4]
Net Latent Capacity Btu [kW]	23,200 [6.8]	23,200 [6.8]	23,200 [6.8]	23,200 [6.8]
IEER[3]	12.2	12.2	12.2	12.2
Net System Power kW	7.55	7.55	7.55	7.55
Heating Performance (Heat Pumps)				
High Temp. Btuh [kW] Rating	86,000 [25.2]	86,000 [25.2]	86,000 [25.2]	86,000 [25.2]
System Power KW / COP	6.84/3.3	6.84/3.3	6.84/3.3	6.84/3.3
Low Temp. Btuh [kW] Rating	48,000 [14.06]	48,000 [14.06]	48,000 [14.06]	48,000 [14.06]
System Power KW / COP	6.44/2.3	6.44/2.3	6.44/2.3	6.44/2.3
Compressor				
No./Type	1/Scroll	1/Scroll	1/Scroll	1/Scroll
Outdoor Sound Rating (dB)[4]	88	88	88	88
Outdoor Coil - Fin Type	Louvered	Louvered	Louvered	Louvered
Tube Type	MicroChannel	MicroChannel	MicroChannel	MicroChannel
MicroChannel Depth in. [mm]	1 [25.4]	1 [25.4]	1 [25.4]	1 [25.4]
Face Area sq. ft. [sq. m]	22.8 [2.12]	22.8 [2.12]	22.8 [2.12]	22.8 [2.12]
Rows / FPI [FPcm]	1 / 16 [6]	1 / 16 [6]	1 / 16 [6]	1 / 16 [6]
Refrigerant Control	TX Valves	TX Valves	TX Valves	TX Valves
Indoor Coil - Fin Type	Louvered	Louvered	Louvered	Louvered
Tube Type	MicroChannel	MicroChannel	MicroChannel	MicroChannel
MicroChannel Depth in. [mm]	1.26 [32]	1.26 [32]	1.26 [32]	1.26 [32]
Face Area sq. ft. [sq. m]	10.9 [1.01]	10.9 [1.01]	10.9 [1.01]	10.9 [1.01]
Rows / FPI [FPcm]	1 / 20 [8]	1 / 20 [8]	1 / 20 [8]	1 / 20 [8]
Refrigerant Control	TX Valves	TX Valves	TX Valves	TX Valves
Drain Connection No./Size in. [mm]	1/0.75 [19.05]	1/0.75 [19.05]	1/0.75 [19.05]	1/0.75 [19.05]
Outdoor Fan - Type	Propeller	Propeller	Propeller	Propeller
No. Used/Diameter in. [mm]	2/24 [609.6]	2/24 [609.6]	2/24 [609.6]	2/24 [609.6]
Drive Type/No. Speeds	Direct/1	Direct/1	Direct/1	Direct/1
CFM [L/s]	8000 [3775]	8000 [3775]	8000 [3775]	8000 [3775]
No. Motors/HP	2 at 1/2 HP	2 at 1/2 HP	2 at 1/2 HP	2 at 1/2 HP
Motor RPM	1075	1075	1075	1075
Indoor Fan - Type	FC Centrifugal	FC Centrifugal	FC Centrifugal	FC Centrifugal
No. Used/Diameter in. [mm]	1/15x15 [381x381]	1/15x15 [381x381]	1/15x15 [381x381]	1/15x15 [381x381]
Drive Type	Belt (Adjustable)	Belt (Adjustable)	Belt (Adjustable)	Belt (Adjustable)
No. Speeds	Single	Single	Single	Single
No. Motors	1	1	1	1
Motor HP	3	2	3	3
Motor RPM	1725	1725	1725	1725
Motor Frame Size	56	56	56	56
Filter - Type	Disposable	Disposable	Disposable	Disposable
Furnished	Yes	Yes	Yes	Yes
(NO.) Size Recommended in. [mm x mm x mm]	(4)2x20x20 [51x508x508]	(4)2x20x20 [51x508x508]	(4)2x20x20 [51x508x508]	(4)2x20x20 [51x508x508]
Refrigerant Charge Oz. [g]	179 [5075]	179 [5075]	179 [5075]	179 [5075]
Weights				
Net Weight lbs. [kg]	786 [357]	775 [352]	785 [356]	786 [357]
Ship Weight lbs. [kg]	825 [374]	814 [369]	824 [374]	825 [374]

See Page 31 for Notes.

[ ] Designates Metric Conversions

NOM. SIZES 7.5-10 TONS [26.4-35.1 kW] ASHRAE 90.1-2007 COMPLIANT MODELS

Model RHPDZS Series	090AYA	090AYB	090AYC	102ACA
Cooling Performance[1]				CONTINUED →
Gross Cooling Capacity Btu [kW]	89,000 [26.08]	89,000 [26.08]	89,000 [26.08]	101,000 [29.59]
EER/SEER[2]	11/NA	11/NA	11/NA	11/NA
Nominal CFM/AHRI Rated CFM [L/s]	3000/3030 [1416/1430]	3000/3030 [1416/1430]	3000/3030 [1416/1430]	3400/3345 [1604/1579]
AHRI Net Cooling Capacity Btu [kW]	86,000 [25.2]	86,000 [25.2]	86,000 [25.2]	98,000 [28.71]
Net Sensible Capacity Btu [kW]	62,800 [18.4]	62,800 [18.4]	62,800 [18.4]	71,000 [20.8]
Net Latent Capacity Btu [kW]	23,200 [6.8]	23,200 [6.8]	23,200 [6.8]	27,000 [7.91]
IEER[3]	12.2	12.2	12.2	12.2
Net System Power kW	7.55	7.55	7.55	8.47
Heating Performance (Heat Pumps)				
High Temp. Btuh [kW] Rating	86,000 [25.2]	86,000 [25.2]	86,000 [25.2]	98,000 [28.71]
System Power KW / COP	6.84/3.3	6.84/3.3	6.84/3.3	7.99/3.3
Low Temp. Btuh [kW] Rating	48,000 [14.06]	48,000 [14.06]	48,000 [14.06]	60,000 [17.58]
System Power KW / COP	6.44/2.3	6.44/2.3	6.44/2.3	7.54/2.3
Compressor				
No./Type	1/Scroll	1/Scroll	1/Scroll	1/Scroll
Outdoor Sound Rating (dB)[4]	88	88	88	88
Outdoor Coil - Fin Type	Louvered	Louvered	Louvered	Louvered
Tube Type	MicroChannel	MicroChannel	MicroChannel	MicroChannel
MicroChannel Depth in. [mm]	1 [25.4]	1 [25.4]	1 [25.4]	1.26 [32]
Face Area sq. ft. [sq. m]	22.8 [2.12]	22.8 [2.12]	22.8 [2.12]	22.4 [2.08]
Rows / FPI [FPcm]	1 / 16 [6]	1 / 16 [6]	1 / 16 [6]	1 / 16 [6]
Refrigerant Control	TX Valves	TX Valves	TX Valves	TX Valves
Indoor Coil - Fin Type	Louvered	Louvered	Louvered	Louvered
Tube Type	MicroChannel	MicroChannel	MicroChannel	MicroChannel
MicroChannel Depth in. [mm]	1.26 [32]	1.26 [32]	1.26 [32]	1.26 [32]
Face Area sq. ft. [sq. m]	10.9 [1.01]	10.9 [1.01]	10.9 [1.01]	10.9 [1.01]
Rows / FPI [FPcm]	1 / 20 [8]	1 / 20 [8]	1 / 20 [8]	1 / 20 [8]
Refrigerant Control	TX Valves	TX Valves	TX Valves	TX Valves
Drain Connection No./Size in. [mm]	1/0.75 [19.05]	1/0.75 [19.05]	1/0.75 [19.05]	1/0.75 [19.05]
Outdoor Fan - Type	Propeller	Propeller	Propeller	Propeller
No. Used/Diameter in. [mm]	2/24 [609.6]	2/24 [609.6]	2/24 [609.6]	2/24 [609.6]
Drive Type/No. Speeds	Direct/1	Direct/1	Direct/1	Direct/1
CFM [L/s]	8000 [3775]	8000 [3775]	8000 [3775]	8000 [3775]
No. Motors/HP	2 at 1/2 HP	2 at 1/2 HP	2 at 1/2 HP	2 at 1/2 HP
Motor RPM	1075	1075	1075	1075
Indoor Fan - Type	FC Centrifugal	FC Centrifugal	FC Centrifugal	FC Centrifugal
No. Used/Diameter in. [mm]	1/15x15 [381x381]	1/15x15 [381x381]	1/15x15 [381x381]	1/15x15 [381x381]
Drive Type	Belt (Adjustable)	Belt (Adjustable)	Belt (Adjustable)	Belt (Adjustable)
No. Speeds	Single	Single	Single	Single
No. Motors	1	1	1	1
Motor HP	2	3	3	2
Motor RPM	1725	1725	1725	1725
Motor Frame Size	56	56	56	56
Filter - Type	Disposable	Disposable	Disposable	Disposable
Furnished	Yes	Yes	Yes	Yes
(NO.) Size Recommended in. [mm x mm x mm]	(4)2x20x20 [51x508x508]	(4)2x20x20 [51x508x508]	(4)2x20x20 [51x508x508]	(4)2x20x20 [51x508x508]
Refrigerant Charge Oz. [g]	179 [5075]	179 [5075]	179 [5075]	197 [5585]
Weights				
Net Weight lbs. [kg]	775 [352]	785 [356]	786 [357]	811 [368]
Ship Weight lbs. [kg]	814 [369]	824 [374]	825 [374]	850 [386]

See Page 31 for Notes.

[ ] Designates Metric Conversions

NOM. SIZES 7.5-10 TONS [26.4-35.1 kW] ASHRAE 90.1-2007 COMPLIANT MODELS

Model RHPDZS Series	102ACB	102ACC	102ACF	102ACG
Cooling Performance[1]				CONTINUED →
Gross Cooling Capacity Btu [kW]	101,000 [29.59]	101,000 [29.59]	101,000 [29.59]	101,000 [29.59]
EER/SEER[2]	11/NA	11/NA	11/NA	11/NA
Nominal CFM/AHRI Rated CFM [L/s]	3400/3345 [1604/1579]	3400/3345 [1604/1579]	3400/3345 [1604/1579]	3400/3345 [1604/1579]
AHRI Net Cooling Capacity Btu [kW]	98,000 [28.71]	98,000 [28.71]	98,000 [28.71]	98,000 [28.71]
Net Sensible Capacity Btu [kW]	71,000 [20.8]	71,000 [20.8]	71,000 [20.8]	71,000 [20.8]
Net Latent Capacity Btu [kW]	27,000 [7.91]	27,000 [7.91]	27,000 [7.91]	27,000 [7.91]
IEER[3]	12.2	12.2	12.2	12.2
Net System Power kW	8.47	8.47	8.47	8.47
Heating Performance (Heat Pumps)				
High Temp. Btuh [kW] Rating	98,000 [28.71]	98,000 [28.71]	98,000 [28.71]	98,000 [28.71]
System Power KW / COP	7.99/3.3	7.99/3.3	7.99/3.3	7.99/3.3
Low Temp. Btuh [kW] Rating	60,000 [17.58]	60,000 [17.58]	60,000 [17.58]	60,000 [17.58]
System Power KW / COP	7.54/2.3	7.54/2.3	7.54/2.3	7.54/2.3
Compressor				
No./Type	1/Scroll	1/Scroll	1/Scroll	1/Scroll
Outdoor Sound Rating (dB)[4]	88	88	88	88
Outdoor Coil - Fin Type	Louvered	Louvered	Louvered	Louvered
Tube Type	MicroChannel	MicroChannel	MicroChannel	MicroChannel
MicroChannel Depth in. [mm]	1.26 [32]	1.26 [32]	1.26 [32]	1.26 [32]
Face Area sq. ft. [sq. m]	22.4 [2.08]	22.4 [2.08]	22.4 [2.08]	22.4 [2.08]
Rows / FPI [FPcm]	1 / 16 [6]	1 / 16 [6]	1 / 16 [6]	1 / 16 [6]
Refrigerant Control	TX Valves	TX Valves	TX Valves	TX Valves
Indoor Coil - Fin Type	Louvered	Louvered	Louvered	Louvered
Tube Type	MicroChannel	MicroChannel	MicroChannel	MicroChannel
MicroChannel Depth in. [mm]	1.26 [32]	1.26 [32]	1.26 [32]	1.26 [32]
Face Area sq. ft. [sq. m]	10.9 [1.01]	10.9 [1.01]	10.9 [1.01]	10.9 [1.01]
Rows / FPI [FPcm]	1 / 20 [8]	1 / 20 [8]	1 / 20 [8]	1 / 20 [8]
Refrigerant Control	TX Valves	TX Valves	TX Valves	TX Valves
Drain Connection No./Size in. [mm]	1/0.75 [19.05]	1/0.75 [19.05]	1/0.75 [19.05]	1/0.75 [19.05]
Outdoor Fan - Type	Propeller	Propeller	Propeller	Propeller
No. Used/Diameter in. [mm]	2/24 [609.6]	2/24 [609.6]	2/24 [609.6]	2/24 [609.6]
Drive Type/No. Speeds	Direct/1	Direct/1	Direct/1	Direct/1
CFM [L/s]	8000 [3775]	8000 [3775]	8000 [3775]	8000 [3775]
No. Motors/HP	2 at 1/2 HP	2 at 1/2 HP	2 at 1/2 HP	2 at 1/2 HP
Motor RPM	1075	1075	1075	1075
Indoor Fan - Type	FC Centrifugal	FC Centrifugal	FC Centrifugal	FC Centrifugal
No. Used/Diameter in. [mm]	1/15x15 [381x381]	1/15x15 [381x381]	1/15x15 [381x381]	1/15x15 [381x381]
Drive Type	Belt (Adjustable)	Belt (Adjustable)	Belt (Adjustable)	Belt (Adjustable)
No. Speeds	Single	Single	Single	Single
No. Motors	1	1	1	1
Motor HP	3	3	2	3
Motor RPM	1725	1725	1725	1725
Motor Frame Size	56	56	56	56
Filter - Type	Disposable	Disposable	Disposable	Disposable
Furnished	Yes	Yes	Yes	Yes
(NO.) Size Recommended in. [mm x mm x mm]	(4)2x20x20 [51x508x508]	(4)2x20x20 [51x508x508]	(4)2x20x20 [51x508x508]	(4)2x20x20 [51x508x508]
Refrigerant Charge Oz. [g]	197 [5585]	197 [5585]	197 [5585]	197 [5585]
Weights				
Net Weight lbs. [kg]	821 [372]	822 [373]	811 [368]	821 [372]
Ship Weight lbs. [kg]	860 [390]	861 [391]	850 [386]	860 [390]

See Page 31 for Notes.

[ ] Designates Metric Conversions

NOM. SIZES 7.5-10 TONS [26.4-35.1 kW] ASHRAE 90.1-2007 COMPLIANT MODELS

Model RHPDZS Series	102ACH	102ADA	102ADB	102ADC
Cooling Performance[1]				CONTINUED →
Gross Cooling Capacity Btu [kW]	101,000 [29.59]	101,000 [29.59]	101,000 [29.59]	101,000 [29.59]
EER/SEER[2]	11/NA	11/NA	11/NA	11/NA
Nominal CFM/AHRI Rated CFM [L/s]	3400/3345 [1604/1579]	3400/3345 [1604/1579]	3400/3345 [1604/1579]	3400/3345 [1604/1579]
AHRI Net Cooling Capacity Btu [kW]	98,000 [28.71]	98,000 [28.71]	98,000 [28.71]	98,000 [28.71]
Net Sensible Capacity Btu [kW]	71,000 [20.8]	71,000 [20.8]	71,000 [20.8]	71,000 [20.8]
Net Latent Capacity Btu [kW]	27,000 [7.91]	27,000 [7.91]	27,000 [7.91]	27,000 [7.91]
IEER[3]	12.2	12.2	12.2	12.2
Net System Power kW	8.47	8.47	8.47	8.47
Heating Performance (Heat Pumps)				
High Temp. Btuh [kW] Rating	98,000 [28.71]	98,000 [28.71]	98,000 [28.71]	98,000 [28.71]
System Power KW / COP	7.99/3.3	7.99/3.3	7.99/3.3	7.99/3.3
Low Temp. Btuh [kW] Rating	60,000 [17.58]	60,000 [17.58]	60,000 [17.58]	60,000 [17.58]
System Power KW / COP	7.54/2.3	7.54/2.3	7.54/2.3	7.54/2.3
Compressor				
No./Type	1/Scroll	1/Scroll	1/Scroll	1/Scroll
Outdoor Sound Rating (dB)[4]	88	88	88	88
Outdoor Coil - Fin Type	Louvered	Louvered	Louvered	Louvered
Tube Type	MicroChannel	MicroChannel	MicroChannel	MicroChannel
MicroChannel Depth in. [mm]	1.26 [32]	1.26 [32]	1.26 [32]	1.26 [32]
Face Area sq. ft. [sq. m]	22.4 [2.08]	22.4 [2.08]	22.4 [2.08]	22.4 [2.08]
Rows / FPI [FPcm]	1 / 16 [6]	1 / 16 [6]	1 / 16 [6]	1 / 16 [6]
Refrigerant Control	TX Valves	TX Valves	TX Valves	TX Valves
Indoor Coil - Fin Type	Louvered	Louvered	Louvered	Louvered
Tube Type	MicroChannel	MicroChannel	MicroChannel	MicroChannel
MicroChannel Depth in. [mm]	1.26 [32]	1.26 [32]	1.26 [32]	1.26 [32]
Face Area sq. ft. [sq. m]	10.9 [1.01]	10.9 [1.01]	10.9 [1.01]	10.9 [1.01]
Rows / FPI [FPcm]	1 / 20 [8]	1 / 20 [8]	1 / 20 [8]	1 / 20 [8]
Refrigerant Control	TX Valves	TX Valves	TX Valves	TX Valves
Drain Connection No./Size in. [mm]	1/0.75 [19.05]	1/0.75 [19.05]	1/0.75 [19.05]	1/0.75 [19.05]
Outdoor Fan - Type	Propeller	Propeller	Propeller	Propeller
No. Used/Diameter in. [mm]	2/24 [609.6]	2/24 [609.6]	2/24 [609.6]	2/24 [609.6]
Drive Type/No. Speeds	Direct/1	Direct/1	Direct/1	Direct/1
CFM [L/s]	8000 [3775]	8000 [3775]	8000 [3775]	8000 [3775]
No. Motors/HP	2 at 1/2 HP	2 at 1/2 HP	2 at 1/2 HP	2 at 1/2 HP
Motor RPM	1075	1075	1075	1075
Indoor Fan - Type	FC Centrifugal	FC Centrifugal	FC Centrifugal	FC Centrifugal
No. Used/Diameter in. [mm]	1/15x15 [381x381]	1/15x15 [381x381]	1/15x15 [381x381]	1/15x15 [381x381]
Drive Type	Belt (Adjustable)	Belt (Adjustable)	Belt (Adjustable)	Belt (Adjustable)
No. Speeds	Single	Single	Single	Single
No. Motors	1	1	1	1
Motor HP	3	2	3	3
Motor RPM	1725	1725	1725	1725
Motor Frame Size	56	56	56	56
Filter - Type	Disposable	Disposable	Disposable	Disposable
Furnished	Yes	Yes	Yes	Yes
(NO.) Size Recommended in. [mm x mm x mm]	(4)2x20x20 [51x508x508]	(4)2x20x20 [51x508x508]	(4)2x20x20 [51x508x508]	(4)2x20x20 [51x508x508]
Refrigerant Charge Oz. [g]	197 [5585]	197 [5585]	197 [5585]	197 [5585]
Weights				
Net Weight lbs. [kg]	822 [373]	811 [368]	821 [372]	822 [373]
Ship Weight lbs. [kg]	861 [391]	850 [386]	860 [390]	861 [391]

See Page 31 for Notes.

[ ] Designates Metric Conversions

NOM. SIZES 7.5-10 TONS [26.4-35.1 kW] ASHRAE 90.1-2007 COMPLIANT MODELS

Model RHPDZS Series	102ADF	102ADG	102ADH	102AYA
Cooling Performance[1]				CONTINUED →
Gross Cooling Capacity Btu [kW]	101,000 [29.59]	101,000 [29.59]	101,000 [29.59]	101,000 [29.59]
EER/SEER[2]	11/NA	11/NA	11/NA	11/NA
Nominal CFM/AHRI Rated CFM [L/s]	3400/3345 [1604/1579]	3400/3345 [1604/1579]	3400/3345 [1604/1579]	3400/3345 [1604/1579]
AHRI Net Cooling Capacity Btu [kW]	98,000 [28.71]	98,000 [28.71]	98,000 [28.71]	98,000 [28.71]
Net Sensible Capacity Btu [kW]	71,000 [20.8]	71,000 [20.8]	71,000 [20.8]	71,000 [20.8]
Net Latent Capacity Btu [kW]	27,000 [7.91]	27,000 [7.91]	27,000 [7.91]	27,000 [7.91]
IEER[3]	12.2	12.2	12.2	12.2
Net System Power kW	8.47	8.47	8.47	8.47
Heating Performance (Heat Pumps)				
High Temp. Btuh [kW] Rating	98,000 [28.71]	98,000 [28.71]	98,000 [28.71]	98,000 [28.71]
System Power KW / COP	7.99/3.3	7.99/3.3	7.99/3.3	7.99/3.3
Low Temp. Btuh [kW] Rating	60,000 [17.58]	60,000 [17.58]	60,000 [17.58]	60,000 [17.58]
System Power KW / COP	7.54/2.3	7.54/2.3	7.54/2.3	7.54/2.3
Compressor				
No./Type	1/Scroll	1/Scroll	1/Scroll	1/Scroll
Outdoor Sound Rating (dB)[4]	88	88	88	88
Outdoor Coil - Fin Type	Louvered	Louvered	Louvered	Louvered
Tube Type	MicroChannel	MicroChannel	MicroChannel	MicroChannel
MicroChannel Depth in. [mm]	1.26 [32]	1.26 [32]	1.26 [32]	1.26 [32]
Face Area sq. ft. [sq. m]	22.4 [2.08]	22.4 [2.08]	22.4 [2.08]	22.4 [2.08]
Rows / FPI [FPcm]	1 / 16 [6]	1 / 16 [6]	1 / 16 [6]	1 / 16 [6]
Refrigerant Control	TX Valves	TX Valves	TX Valves	TX Valves
Indoor Coil - Fin Type	Louvered	Louvered	Louvered	Louvered
Tube Type	MicroChannel	MicroChannel	MicroChannel	MicroChannel
MicroChannel Depth in. [mm]	1.26 [32]	1.26 [32]	1.26 [32]	1.26 [32]
Face Area sq. ft. [sq. m]	10.9 [1.01]	10.9 [1.01]	10.9 [1.01]	10.9 [1.01]
Rows / FPI [FPcm]	1 / 20 [8]	1 / 20 [8]	1 / 20 [8]	1 / 20 [8]
Refrigerant Control	TX Valves	TX Valves	TX Valves	TX Valves
Drain Connection No./Size in. [mm]	1/0.75 [19.05]	1/0.75 [19.05]	1/0.75 [19.05]	1/0.75 [19.05]
Outdoor Fan - Type	Propeller	Propeller	Propeller	Propeller
No. Used/Diameter in. [mm]	2/24 [609.6]	2/24 [609.6]	2/24 [609.6]	2/24 [609.6]
Drive Type/No. Speeds	Direct/1	Direct/1	Direct/1	Direct/1
CFM [L/s]	8000 [3775]	8000 [3775]	8000 [3775]	8000 [3775]
No. Motors/HP	2 at 1/2 HP	2 at 1/2 HP	2 at 1/2 HP	2 at 1/2 HP
Motor RPM	1075	1075	1075	1075
Indoor Fan - Type	FC Centrifugal	FC Centrifugal	FC Centrifugal	FC Centrifugal
No. Used/Diameter in. [mm]	1/15x15 [381x381]	1/15x15 [381x381]	1/15x15 [381x381]	1/15x15 [381x381]
Drive Type	Belt (Adjustable)	Belt (Adjustable)	Belt (Adjustable)	Belt (Adjustable)
No. Speeds	Single	Single	Single	Single
No. Motors	1	1	1	1
Motor HP	2	3	3	2
Motor RPM	1725	1725	1725	1725
Motor Frame Size	56	56	56	56
Filter - Type	Disposable	Disposable	Disposable	Disposable
Furnished	Yes	Yes	Yes	Yes
(NO.) Size Recommended in. [mm x mm x mm]	(4)2x20x20 [51x508x508]	(4)2x20x20 [51x508x508]	(4)2x20x20 [51x508x508]	(4)2x20x20 [51x508x508]
Refrigerant Charge Oz. [g]	197 [5585]	197 [5585]	197 [5585]	197 [5585]
Weights				
Net Weight lbs. [kg]	811 [368]	821 [372]	822 [373]	811 [368]
Ship Weight lbs. [kg]	850 [386]	860 [390]	861 [391]	850 [386]

See Page 31 for Notes.

[ ] Designates Metric Conversions

NOM. SIZES 7.5-10 TONS [26.4-35.1 kW] ASHRAE 90.1-2007 COMPLIANT MODELS

Model RHPDZS Series	102AYB	102AYC	120ACA	120ACB
Cooling Performance[1]				CONTINUED →
Gross Cooling Capacity Btu [kW]	101,000 [29.59]	101,000 [29.59]	119,000 [34.87]	119,000 [34.87]
EER/SEER[2]	11/NA	11/NA	11/NA	11/NA
Nominal CFM/AHRI Rated CFM [L/s]	3400/3345 [1604/1579]	3400/3345 [1604/1579]	4000/4060 [1888/1916]	4000/4060 [1888/1916]
AHRI Net Cooling Capacity Btu [kW]	98,000 [28.71]	98,000 [28.71]	114,000 [33.4]	114,000 [33.4]
Net Sensible Capacity Btu [kW]	71,000 [20.8]	71,000 [20.8]	82,800 [24.26]	82,800 [24.26]
Net Latent Capacity Btu [kW]	27,000 [7.91]	27,000 [7.91]	31,200 [9.14]	31,200 [9.14]
IEER[3]	12.2	12.2	12.2	12.2
Net System Power kW	8.47	8.47	10.13	10.13
Heating Performance (Heat Pumps)				
High Temp. Btuh [kW] Rating	98,000 [28.71]	98,000 [28.71]	114,000 [33.4]	114,000 [33.4]
System Power KW / COP	7.99/3.3	7.99/3.3	9.03/3.3	9.03/3.3
Low Temp. Btuh [kW] Rating	60,000 [17.58]	60,000 [17.58]	72,000 [21.1]	72,000 [21.1]
System Power KW / COP	7.54/2.3	7.54/2.3	8.3/2.3	8.3/2.3
Compressor				
No./Type	1/Scroll	1/Scroll	1/Scroll	1/Scroll
Outdoor Sound Rating (dB)[4]	88	88	88	88
Outdoor Coil - Fin Type	Louvered	Louvered	Louvered	Louvered
Tube Type	MicroChannel	MicroChannel	MicroChannel	MicroChannel
MicroChannel Depth in. [mm]	1.26 [32]	1.26 [32]	1.26 [32]	1.26 [32]
Face Area sq. ft. [sq. m]	22.4 [2.08]	22.4 [2.08]	28.8 [2.68]	28.8 [2.68]
Rows / FPI [FPcm]	1 / 16 [6]	1 / 16 [6]	1 / 16 [6]	1 / 16 [6]
Refrigerant Control	TX Valves	TX Valves	TX Valves	TX Valves
Indoor Coil - Fin Type	Louvered	Louvered	Louvered	Louvered
Tube Type	MicroChannel	MicroChannel	MicroChannel	MicroChannel
MicroChannel Depth in. [mm]	1.26 [32]	1.26 [32]	1.26 [32]	1.26 [32]
Face Area sq. ft. [sq. m]	10.9 [1.01]	10.9 [1.01]	13.2 [1.23]	13.2 [1.23]
Rows / FPI [FPcm]	1 / 20 [8]	1 / 20 [8]	1 / 20 [8]	1 / 20 [8]
Refrigerant Control	TX Valves	TX Valves	TX Valves	TX Valves
Drain Connection No./Size in. [mm]	1/0.75 [19.05]	1/0.75 [19.05]	1/0.75 [19.05]	1/0.75 [19.05]
Outdoor Fan - Type	Propeller	Propeller	Propeller	Propeller
No. Used/Diameter in. [mm]	2/24 [609.6]	2/24 [609.6]	2/24 [609.6]	2/24 [609.6]
Drive Type/No. Speeds	Direct/1	Direct/1	Direct/1	Direct/1
CFM [L/s]	8000 [3775]	8000 [3775]	8000 [3775]	8000 [3775]
No. Motors/HP	2 at 1/2 HP	2 at 1/2 HP	2 at 1/2 HP	2 at 1/2 HP
Motor RPM	1075	1075	1075	1075
Indoor Fan - Type	FC Centrifugal	FC Centrifugal	FC Centrifugal	FC Centrifugal
No. Used/Diameter in. [mm]	1/15x15 [381x381]	1/15x15 [381x381]	1/15x15 [381x381]	1/15x15 [381x381]
Drive Type	Belt (Adjustable)	Belt (Adjustable)	Belt (Adjustable)	Belt (Adjustable)
No. Speeds	Single	Single	Single	Single
No. Motors	1	1	1	1
Motor HP	3	3	2	3
Motor RPM	1725	1725	1725	1725
Motor Frame Size	56	56	56	56
Filter - Type	Disposable	Disposable	Disposable	Disposable
Furnished	Yes	Yes	Yes	Yes
(NO.) Size Recommended in. [mm x mm x mm]	(4)2x20x20 [51x508x508]	(4)2x20x20 [51x508x508]	(4)2x25x20 [51x635x508]	(4)2x25x20 [51x635x508]
Refrigerant Charge Oz. [g]	197 [5585]	197 [5585]	213 [6039]	213 [6039]
Weights				
Net Weight lbs. [kg]	821 [372]	822 [373]	863 [391]	873 [396]
Ship Weight lbs. [kg]	860 [390]	861 [391]	902 [409]	912 [414]

See Page 31 for Notes.

[ ] Designates Metric Conversions

NOM. SIZES 7.5-10 TONS [26.4-35.1 kW] ASHRAE 90.1-2007 COMPLIANT MODELS

Model RHPDZS Series	120ACC	120ACF	120ACG	120ACH
Cooling Performance[1]				CONTINUED →
Gross Cooling Capacity Btu [kW]	119,000 [34.87]	119,000 [34.87]	119,000 [34.87]	119,000 [34.87]
EER/SEER[2]	11/NA	11/NA	11/NA	11/NA
Nominal CFM/AHRI Rated CFM [L/s]	4000/4060 [1888/1916]	4000/4060 [1888/1916]	4000/4060 [1888/1916]	4000/4060 [1888/1916]
AHRI Net Cooling Capacity Btu [kW]	114,000 [33.4]	114,000 [33.4]	114,000 [33.4]	114,000 [33.4]
Net Sensible Capacity Btu [kW]	82,800 [24.26]	82,800 [24.26]	82,800 [24.26]	82,800 [24.26]
Net Latent Capacity Btu [kW]	31,200 [9.14]	31,200 [9.14]	31,200 [9.14]	31,200 [9.14]
IEER[3]	12.2	12.2	12.2	12.2
Net System Power kW	10.13	10.13	10.13	10.13
Heating Performance (Heat Pumps)				
High Temp. Btuh [kW] Rating	114,000 [33.4]	114,000 [33.4]	114,000 [33.4]	114,000 [33.4]
System Power KW / COP	9.03/3.3	9.03/3.3	9.03/3.3	9.03/3.3
Low Temp. Btuh [kW] Rating	72,000 [21.1]	72,000 [21.1]	72,000 [21.1]	72,000 [21.1]
System Power KW / COP	8.3/2.3	8.3/2.3	8.3/2.3	8.3/2.3
Compressor				
No./Type	1/Scroll	1/Scroll	1/Scroll	1/Scroll
Outdoor Sound Rating (dB)[4]	88	88	88	88
Outdoor Coil - Fin Type	Louvered	Louvered	Louvered	Louvered
Tube Type	MicroChannel	MicroChannel	MicroChannel	MicroChannel
MicroChannel Depth in. [mm]	1.26 [32]	1.26 [32]	1.26 [32]	1.26 [32]
Face Area sq. ft. [sq. m]	28.8 [2.68]	28.8 [2.68]	28.8 [2.68]	28.8 [2.68]
Rows / FPI [FPcm]	1 / 16 [6]	1 / 16 [6]	1 / 16 [6]	1 / 16 [6]
Refrigerant Control	TX Valves	TX Valves	TX Valves	TX Valves
Indoor Coil - Fin Type	Louvered	Louvered	Louvered	Louvered
Tube Type	MicroChannel	MicroChannel	MicroChannel	MicroChannel
MicroChannel Depth in. [mm]	1.26 [32]	1.26 [32]	1.26 [32]	1.26 [32]
Face Area sq. ft. [sq. m]	13.2 [1.23]	13.2 [1.23]	13.2 [1.23]	13.2 [1.23]
Rows / FPI [FPcm]	1 / 20 [8]	1 / 20 [8]	1 / 20 [8]	1 / 20 [8]
Refrigerant Control	TX Valves	TX Valves	TX Valves	TX Valves
Drain Connection No./Size in. [mm]	1/0.75 [19.05]	1/0.75 [19.05]	1/0.75 [19.05]	1/0.75 [19.05]
Outdoor Fan - Type	Propeller	Propeller	Propeller	Propeller
No. Used/Diameter in. [mm]	2/24 [609.6]	2/24 [609.6]	2/24 [609.6]	2/24 [609.6]
Drive Type/No. Speeds	Direct/1	Direct/1	Direct/1	Direct/1
CFM [L/s]	8000 [3775]	8000 [3775]	8000 [3775]	8000 [3775]
No. Motors/HP	2 at 1/2 HP	2 at 1/2 HP	2 at 1/2 HP	2 at 1/2 HP
Motor RPM	1075	1075	1075	1075
Indoor Fan - Type	FC Centrifugal	FC Centrifugal	FC Centrifugal	FC Centrifugal
No. Used/Diameter in. [mm]	1/15x15 [381x381]	1/15x15 [381x381]	1/15x15 [381x381]	1/15x15 [381x381]
Drive Type	Belt (Adjustable)	Belt (Adjustable)	Belt (Adjustable)	Belt (Adjustable)
No. Speeds	Single	Single	Single	Single
No. Motors	1	1	1	1
Motor HP	3	2	3	3
Motor RPM	1725	1725	1725	1725
Motor Frame Size	56	56	56	56
Filter - Type	Disposable	Disposable	Disposable	Disposable
Furnished	Yes	Yes	Yes	Yes
(NO.) Size Recommended in. [mm x mm x mm]	(4)2x25x20 [51x635x508]	(4)2x25x20 [51x635x508]	(4)2x25x20 [51x635x508]	(4)2x25x20 [51x635x508]
Refrigerant Charge Oz. [g]	213 [6039]	213 [6039]	213 [6039]	213 [6039]
Weights				
Net Weight lbs. [kg]	874 [396]	863 [391]	873 [396]	874 [396]
Ship Weight lbs. [kg]	913 [414]	902 [409]	912 [414]	913 [414]

See Page 31 for Notes.

[ ] Designates Metric Conversions

NOM. SIZES 7.5-10 TONS [26.4-35.1 kW] ASHRAE 90.1-2007 COMPLIANT MODELS

Model RHPDZS Series	120ADA	120ADB	120ADC	120ADF
Cooling Performance[1]				CONTINUED →
Gross Cooling Capacity Btu [kW]	119,000 [34.87]	119,000 [34.87]	119,000 [34.87]	119,000 [34.87]
EER/SEER[2]	11/NA	11/NA	11/NA	11/NA
Nominal CFM/AHRI Rated CFM [L/s]	4000/4060 [1888/1916]	4000/4060 [1888/1916]	4000/4060 [1888/1916]	4000/4060 [1888/1916]
AHRI Net Cooling Capacity Btu [kW]	114,000 [33.4]	114,000 [33.4]	114,000 [33.4]	114,000 [33.4]
Net Sensible Capacity Btu [kW]	82,800 [24.26]	82,800 [24.26]	82,800 [24.26]	82,800 [24.26]
Net Latent Capacity Btu [kW]	31,200 [9.14]	31,200 [9.14]	31,200 [9.14]	31,200 [9.14]
IEER[3]	12.2	12.2	12.2	12.2
Net System Power kW	10.13	10.13	10.13	10.13
Heating Performance (Heat Pumps)				
High Temp. Btuh [kW] Rating	114,000 [33.4]	114,000 [33.4]	114,000 [33.4]	114,000 [33.4]
System Power KW / COP	9.03/3.3	9.03/3.3	9.03/3.3	9.03/3.3
Low Temp. Btuh [kW] Rating	72,000 [21.1]	72,000 [21.1]	72,000 [21.1]	72,000 [21.1]
System Power KW / COP	8.3/2.3	8.3/2.3	8.3/2.3	8.3/2.3
Compressor				
No./Type	1/Scroll	1/Scroll	1/Scroll	1/Scroll
Outdoor Sound Rating (dB)[4]	88	88	88	88
Outdoor Coil - Fin Type	Louvered	Louvered	Louvered	Louvered
Tube Type	MicroChannel	MicroChannel	MicroChannel	MicroChannel
MicroChannel Depth in. [mm]	1.26 [32]	1.26 [32]	1.26 [32]	1.26 [32]
Face Area sq. ft. [sq. m]	28.8 [2.68]	28.8 [2.68]	28.8 [2.68]	28.8 [2.68]
Rows / FPI [FPcm]	1 / 16 [6]	1 / 16 [6]	1 / 16 [6]	1 / 16 [6]
Refrigerant Control	TX Valves	TX Valves	TX Valves	TX Valves
Indoor Coil - Fin Type	Louvered	Louvered	Louvered	Louvered
Tube Type	MicroChannel	MicroChannel	MicroChannel	MicroChannel
MicroChannel Depth in. [mm]	1.26 [32]	1.26 [32]	1.26 [32]	1.26 [32]
Face Area sq. ft. [sq. m]	13.2 [1.23]	13.2 [1.23]	13.2 [1.23]	13.2 [1.23]
Rows / FPI [FPcm]	1 / 20 [8]	1 / 20 [8]	1 / 20 [8]	1 / 20 [8]
Refrigerant Control	TX Valves	TX Valves	TX Valves	TX Valves
Drain Connection No./Size in. [mm]	1/0.75 [19.05]	1/0.75 [19.05]	1/0.75 [19.05]	1/0.75 [19.05]
Outdoor Fan - Type	Propeller	Propeller	Propeller	Propeller
No. Used/Diameter in. [mm]	2/24 [609.6]	2/24 [609.6]	2/24 [609.6]	2/24 [609.6]
Drive Type/No. Speeds	Direct/1	Direct/1	Direct/1	Direct/1
CFM [L/s]	8000 [3775]	8000 [3775]	8000 [3775]	8000 [3775]
No. Motors/HP	2 at 1/2 HP	2 at 1/2 HP	2 at 1/2 HP	2 at 1/2 HP
Motor RPM	1075	1075	1075	1075
Indoor Fan - Type	FC Centrifugal	FC Centrifugal	FC Centrifugal	FC Centrifugal
No. Used/Diameter in. [mm]	1/15x15 [381x381]	1/15x15 [381x381]	1/15x15 [381x381]	1/15x15 [381x381]
Drive Type	Belt (Adjustable)	Belt (Adjustable)	Belt (Adjustable)	Belt (Adjustable)
No. Speeds	Single	Single	Single	Single
No. Motors	1	1	1	1
Motor HP	2	3	3	2
Motor RPM	1725	1725	1725	1725
Motor Frame Size	56	56	56	56
Filter - Type	Disposable	Disposable	Disposable	Disposable
Furnished	Yes	Yes	Yes	Yes
(NO.) Size Recommended in. [mm x mm x mm]	(4)2x25x20 [51x635x508]	(4)2x25x20 [51x635x508]	(4)2x25x20 [51x635x508]	(4)2x25x20 [51x635x508]
Refrigerant Charge Oz. [g]	213 [6039]	213 [6039]	213 [6039]	213 [6039]
Weights				
Net Weight lbs. [kg]	863 [391]	873 [396]	874 [396]	863 [391]
Ship Weight lbs. [kg]	902 [409]	912 [414]	913 [414]	902 [409]

See Page 31 for Notes.

[ ] Designates Metric Conversions

NOM. SIZES 7.5-10 TONS [26.4-35.1 kW] ASHRAE 90.1-2007 COMPLIANT MODELS

Model RHPDZS Series	120ADG	120ADH	120AYA	120AYB
Cooling Performance[1]				CONTINUED →
Gross Cooling Capacity Btu [kW]	119,000 [34.87]	119,000 [34.87]	119,000 [34.87]	119,000 [34.87]
EER/SEER[2]	11/NA	11/NA	11/NA	11/NA
Nominal CFM/AHRI Rated CFM [L/s]	4000/4060 [1888/1916]	4000/4060 [1888/1916]	4000/4060 [1888/1916]	4000/4060 [1888/1916]
AHRI Net Cooling Capacity Btu [kW]	114,000 [33.4]	114,000 [33.4]	114,000 [33.4]	114,000 [33.4]
Net Sensible Capacity Btu [kW]	82,800 [24.26]	82,800 [24.26]	82,800 [24.26]	82,800 [24.26]
Net Latent Capacity Btu [kW]	31,200 [9.14]	31,200 [9.14]	31,200 [9.14]	31,200 [9.14]
IEER[3]	12.2	12.2	12.2	12.2
Net System Power kW	10.13	10.13	10.13	10.13
Heating Performance (Heat Pumps)				
High Temp. Btuh [kW] Rating	114,000 [33.4]	114,000 [33.4]	114,000 [33.4]	114,000 [33.4]
System Power KW / COP	9.03/3.3	9.03/3.3	9.03/3.3	9.03/3.3
Low Temp. Btuh [kW] Rating	72,000 [21.1]	72,000 [21.1]	72,000 [21.1]	72,000 [21.1]
System Power KW / COP	8.3/2.3	8.3/2.3	8.3/2.3	8.3/2.3
Compressor				
No./Type	1/Scroll	1/Scroll	1/Scroll	1/Scroll
Outdoor Sound Rating (dB)[4]	88	88	88	88
Outdoor Coil - Fin Type	Louvered	Louvered	Louvered	Louvered
Tube Type	MicroChannel	MicroChannel	MicroChannel	MicroChannel
MicroChannel Depth in. [mm]	1.26 [32]	0.26 [6.6]	1.26 [32]	1.26 [32]
Face Area sq. ft. [sq. m]	28.8 [2.68]	28.8 [2.68]	28.8 [2.68]	28.8 [2.68]
Rows / FPI [FPcm]	1 / 16 [6]	1 / 16 [6]	1 / 16 [6]	1 / 16 [6]
Refrigerant Control	TX Valves	TX Valves	TX Valves	TX Valves
Indoor Coil - Fin Type	Louvered	Louvered	Louvered	Louvered
Tube Type	MicroChannel	MicroChannel	MicroChannel	MicroChannel
MicroChannel Depth in. [mm]	1.26 [32]	1.26 [32]	1.26 [32]	1.26 [32]
Face Area sq. ft. [sq. m]	13.2 [1.23]	13.2 [1.23]	13.2 [1.23]	13.2 [1.23]
Rows / FPI [FPcm]	1 / 20 [8]	1 / 20 [8]	1 / 20 [8]	1 / 20 [8]
Refrigerant Control	TX Valves	TX Valves	TX Valves	TX Valves
Drain Connection No./Size in. [mm]	1/0.75 [19.05]	1/0.75 [19.05]	1/0.75 [19.05]	1/0.75 [19.05]
Outdoor Fan - Type	Propeller	Propeller	Propeller	Propeller
No. Used/Diameter in. [mm]	2/24 [609.6]	2/24 [609.6]	2/24 [609.6]	2/24 [609.6]
Drive Type/No. Speeds	Direct/1	Direct/1	Direct/1	Direct/1
CFM [L/s]	8000 [3775]	8000 [3775]	8000 [3775]	8000 [3775]
No. Motors/HP	2 at 1/2 HP	2 at 1/2 HP	2 at 1/2 HP	2 at 1/2 HP
Motor RPM	1075	1075	1075	1075
Indoor Fan - Type	FC Centrifugal	FC Centrifugal	FC Centrifugal	FC Centrifugal
No. Used/Diameter in. [mm]	1/15x15 [381x381]	1/15x15 [381x381]	1/15x15 [381x381]	1/15x15 [381x381]
Drive Type	Belt (Adjustable)	Belt (Adjustable)	Belt (Adjustable)	Belt (Adjustable)
No. Speeds	Single	Single	Single	Single
No. Motors	1	1	1	1
Motor HP	3	3	2	3
Motor RPM	1725	1725	1725	1725
Motor Frame Size	56	56	56	56
Filter - Type	Disposable	Disposable	Disposable	Disposable
Furnished	Yes	Yes	Yes	Yes
(NO.) Size Recommended in. [mm x mm x mm]	(4)2x25x20 [51x635x508]	(4)2x25x20 [51x635x508]	(4)2x25x20 [51x635x508]	(4)2x25x20 [51x635x508]
Refrigerant Charge Oz. [g]	213 [6039]	213 [6039]	213 [6039]	213 [6039]
Weights				
Net Weight lbs. [kg]	873 [396]	874 [396]	863 [391]	873 [396]
Ship Weight lbs. [kg]	912 [414]	913 [414]	902 [409]	912 [414]

See Page 31 for Notes.

[ ] Designates Metric Conversions

NOM. SIZES 7.5-10 TONS [26.4-35.1 kW] ASHRAE 90.1-2007 COMPLIANT MODELS

Model RHPDZS Series	120AYC
Cooling Performance[1]	
Gross Cooling Capacity Btu [kW]	119,000 [34.87]
EER/SEER[2]	11/NA
Nominal CFM/AHRI Rated CFM [L/s]	4000/4060 [1888/1916]
AHRI Net Cooling Capacity Btu [kW]	114,000 [33.4]
Net Sensible Capacity Btu [kW]	82,800 [24.26]
Net Latent Capacity Btu [kW]	31,200 [9.14]
IEER[3]	12.2
Net System Power kW	10.13
Heating Performance (Heat Pumps)	
High Temp. Btuh [kW] Rating	114,000 [33.4]
System Power KW / COP	9.03/3.3
Low Temp. Btuh [kW] Rating	72,000 [21.1]
System Power KW / COP	8.3/2.3
Compressor	
No./Type	1/Scroll
Outdoor Sound Rating (dB)[4]	88
Outdoor Coil - Fin Type	Louvered
Tube Type	MicroChannel
MicroChannel Depth in. [mm]	1.26 [32]
Face Area sq. ft. [sq. m]	28.8 [2.68]
Rows / FPI [FPcm]	1 / 16 [6]
Refrigerant Control	TX Valves
Indoor Coil - Fin Type	Louvered
Tube Type	MicroChannel
MicroChannel Depth in. [mm]	1.26 [32]
Face Area sq. ft. [sq. m]	13.2 [1.23]
Rows / FPI [FPcm]	1 / 20 [8]
Refrigerant Control	TX Valves
Drain Connection No./Size in. [mm]	1/0.75 [19.05]
Outdoor Fan - Type	Propeller
No. Used/Diameter in. [mm]	2/24 [609.6]
Drive Type/No. Speeds	Direct/1
CFM [L/s]	8000 [3775]
No. Motors/HP	2 at 1/2 HP
Motor RPM	1075
Indoor Fan - Type	FC Centrifugal
No. Used/Diameter in. [mm]	1/15x15 [381x381]
Drive Type	Belt (Adjustable)
No. Speeds	Single
No. Motors	1
Motor HP	3
Motor RPM	1725
Motor Frame Size	56
Filter - Type	Disposable
Furnished	Yes
(NO.) Size Recommended in. [mm x mm x mm]	(4)2x25x20 [51x635x508]
Refrigerant Charge Oz. [g]	213 [6039]
Weights	
Net Weight lbs. [kg]	874 [396]
Ship Weight lbs. [kg]	913 [414]

See Page 31 for Notes.

[ ] Designates Metric Conversions

NOM. SIZES 7.5-10 TONS [26.4-35.1 kW] ASHRAE 90.1-2007 COMPLIANT MODELS

Model RHPDZT Series	090ACF	090ACG	090ACH	090ADF
Cooling Performance[1]				CONTINUED →
Gross Cooling Capacity Btu [kW]	89,000 [26.08]	89,000 [26.08]	89,000 [26.08]	89,000 [26.08]
EER/SEER[2]	11/NA	11/NA	11/NA	11/NA
Nominal CFM/AHRI Rated CFM [L/s]	3000/3030 [1416/1430]	3000/3030 [1416/1430]	3000/3030 [1416/1430]	3000/3030 [1416/1430]
AHRI Net Cooling Capacity Btu [kW]	86,000 [25.2]	86,000 [25.2]	86,000 [25.2]	86,000 [25.2]
Net Sensible Capacity Btu [kW]	62,800 [18.4]	62,800 [18.4]	62,800 [18.4]	62,800 [18.4]
Net Latent Capacity Btu [kW]	23,200 [6.8]	23,200 [6.8]	23,200 [6.8]	23,200 [6.8]
IEER[3]	14.1	14.1	14.1	14.1
Net System Power kW	7.55	7.55	7.55	7.55
Heating Performance (Heat Pumps)				
High Temp. Btuh [kW] Rating	86,000 [25.2]	86,000 [25.2]	86,000 [25.2]	86,000 [25.2]
System Power KW / COP	6.84/3.4	6.84/3.4	6.84/3.4	6.84/3.4
Low Temp. Btuh [kW] Rating	48,000 [14.06]	48,000 [14.06]	48,000 [14.06]	48,000 [14.06]
System Power KW / COP	6.44/2.3	6.44/2.3	6.44/2.3	6.44/2.3
Compressor				
No./Type	1/Scroll	1/Scroll	1/Scroll	1/Scroll
Outdoor Sound Rating (dB)[4]	88	88	88	88
Outdoor Coil - Fin Type	Louvered	Louvered	Louvered	Louvered
Tube Type	MicroChannel	MicroChannel	MicroChannel	MicroChannel
MicroChannel Depth in. [mm]	1 [25.4]	1 [25.4]	1 [25.4]	1 [25.4]
Face Area sq. ft. [sq. m]	22.8 [2.12]	22.8 [2.12]	22.8 [2.12]	22.8 [2.12]
Rows / FPI [FPcm]	1 / 16 [6]	1 / 16 [6]	1 / 16 [6]	1 / 16 [6]
Refrigerant Control	TX Valves	TX Valves	TX Valves	TX Valves
Indoor Coil - Fin Type	Louvered	Louvered	Louvered	Louvered
Tube Type	MicroChannel	MicroChannel	MicroChannel	MicroChannel
MicroChannel Depth in. [mm]	1.26 [32]	1.26 [32]	1.26 [32]	1.26 [32]
Face Area sq. ft. [sq. m]	10.9 [1.01]	10.9 [1.01]	10.9 [1.01]	10.9 [1.01]
Rows / FPI [FPcm]	1 / 20 [8]	1 / 20 [8]	1 / 20 [8]	1 / 20 [8]
Refrigerant Control	TX Valves	TX Valves	TX Valves	TX Valves
Drain Connection No./Size in. [mm]	1/0.75 [19.05]	1/0.75 [19.05]	1/0.75 [19.05]	1/0.75 [19.05]
Outdoor Fan - Type	Propeller	Propeller	Propeller	Propeller
No. Used/Diameter in. [mm]	2/24 [609.6]	2/24 [609.6]	2/24 [609.6]	2/24 [609.6]
Drive Type/No. Speeds	Direct/1	Direct/1	Direct/1	Direct/1
CFM [L/s]	8000 [3775]	8000 [3775]	8000 [3775]	8000 [3775]
No. Motors/HP	2 at 1/2 HP	2 at 1/2 HP	2 at 1/2 HP	2 at 1/2 HP
Motor RPM	1075	1075	1075	1075
Indoor Fan - Type	FC Centrifugal	FC Centrifugal	FC Centrifugal	FC Centrifugal
No. Used/Diameter in. [mm]	1/15x15 [381x381]	1/15x15 [381x381]	1/15x15 [381x381]	1/15x15 [381x381]
Drive Type	Belt (Adjustable)	Belt (Adjustable)	Belt (Adjustable)	Belt (Adjustable)
No. Speeds	Single	Single	Single	Single
No. Motors	1	1	1	1
Motor HP	2	3	3	2
Motor RPM	1725	1725	1725	1725
Motor Frame Size	56	56	56	56
Filter - Type	Disposable	Disposable	Disposable	Disposable
Furnished	Yes	Yes	Yes	Yes
(NO.) Size Recommended in. [mm x mm x mm]	(4)2x20x20 [51x508x508]	(4)2x20x20 [51x508x508]	(4)2x20x20 [51x508x508]	(4)2x20x20 [51x508x508]
Refrigerant Charge Oz. [g]	179 [5075]	179 [5075]	179 [5075]	179 [5075]
Weights				
Net Weight lbs. [kg]	775 [352]	785 [356]	786 [357]	775 [352]
Ship Weight lbs. [kg]	814 [369]	824 [374]	825 [374]	814 [369]

See Page 31 for Notes.

[ ] Designates Metric Conversions

NOM. SIZES 7.5-10 TONS [26.4-35.1 kW] ASHRAE 90.1-2007 COMPLIANT MODELS

Model RHPDZT Series	090ADG	090ADH	102ACF	102ACG
Cooling Performance[1]				CONTINUED →
Gross Cooling Capacity Btu [kW]	89,000 [26.08]	89,000 [26.08]	101,000 [29.59]	101,000 [29.59]
EER/SEER[2]	11/NA	11/NA	11/NA	11/NA
Nominal CFM/AHRI Rated CFM [L/s]	3000/3030 [1416/1430]	3000/3030 [1416/1430]	3400/3345 [1604/1579]	3400/3345 [1604/1579]
AHRI Net Cooling Capacity Btu [kW]	86,000 [25.2]	86,000 [25.2]	98,000 [28.71]	98,000 [28.71]
Net Sensible Capacity Btu [kW]	62,800 [18.4]	62,800 [18.4]	71,000 [20.8]	71,000 [20.8]
Net Latent Capacity Btu [kW]	23,200 [6.8]	23,200 [6.8]	27,000 [7.91]	27,000 [7.91]
IEER[3]	14.1	14.1	14.1	14.1
Net System Power kW	7.55	7.55	8.47	8.47
Heating Performance (Heat Pumps)				
High Temp. Btuh [kW] Rating	86,000 [25.2]	86,000 [25.2]	98,000 [28.71]	98,000 [28.71]
System Power KW / COP	6.84/3.4	6.84/3.4	7.99/3.4	7.99/3.4
Low Temp. Btuh [kW] Rating	48,000 [14.06]	48,000 [14.06]	60,000 [17.58]	60,000 [17.58]
System Power KW / COP	6.44/2.3	6.44/2.3	7.54/2.3	7.54/2.3
Compressor				
No./Type	1/Scroll	1/Scroll	1/Scroll	1/Scroll
Outdoor Sound Rating (dB)[4]	88	88	88	88
Outdoor Coil - Fin Type	Louvered	Louvered	Louvered	Louvered
Tube Type	MicroChannel	MicroChannel	MicroChannel	MicroChannel
MicroChannel Depth in. [mm]	1 [25.4]	1 [25.4]	1.26 [32]	1.26 [32]
Face Area sq. ft. [sq. m]	22.8 [2.12]	22.8 [2.12]	22.4 [2.08]	22.4 [2.08]
Rows / FPI [FPcm]	1 / 16 [6]	1 / 16 [6]	1 / 16 [6]	1 / 16 [6]
Refrigerant Control	TX Valves	TX Valves	TX Valves	TX Valves
Indoor Coil - Fin Type	Louvered	Louvered	Louvered	Louvered
Tube Type	MicroChannel	MicroChannel	MicroChannel	MicroChannel
MicroChannel Depth in. [mm]	1.26 [32]	1.26 [32]	1.26 [32]	1.26 [32]
Face Area sq. ft. [sq. m]	10.9 [1.01]	10.9 [1.01]	10.9 [1.01]	10.9 [1.01]
Rows / FPI [FPcm]	1 / 20 [8]	1 / 20 [8]	1 / 20 [8]	1 / 20 [8]
Refrigerant Control	TX Valves	TX Valves	TX Valves	TX Valves
Drain Connection No./Size in. [mm]	1/0.75 [19.05]	1/0.75 [19.05]	1/0.75 [19.05]	1/0.75 [19.05]
Outdoor Fan - Type	Propeller	Propeller	Propeller	Propeller
No. Used/Diameter in. [mm]	2/24 [609.6]	2/24 [609.6]	2/24 [609.6]	2/24 [609.6]
Drive Type/No. Speeds	Direct/1	Direct/1	Direct/1	Direct/1
CFM [L/s]	8000 [3775]	8000 [3775]	8000 [3775]	8000 [3775]
No. Motors/HP	2 at 1/2 HP	2 at 1/2 HP	2 at 1/2 HP	2 at 1/2 HP
Motor RPM	1075	1075	1075	1075
Indoor Fan - Type	FC Centrifugal	FC Centrifugal	FC Centrifugal	FC Centrifugal
No. Used/Diameter in. [mm]	1/15x15 [381x381]	1/15x15 [381x381]	1/15x15 [381x381]	1/15x15 [381x381]
Drive Type	Belt (Adjustable)	Belt (Adjustable)	Belt (Adjustable)	Belt (Adjustable)
No. Speeds	Single	Single	Single	Single
No. Motors	1	1	1	1
Motor HP	3	3	2	3
Motor RPM	1725	1725	1725	1725
Motor Frame Size	56	56	56	56
Filter - Type	Disposable	Disposable	Disposable	Disposable
Furnished	Yes	Yes	Yes	Yes
(NO.) Size Recommended in. [mm x mm x mm]	(4)2x20x20 [51x508x508]	(4)2x20x20 [51x508x508]	(4)2x20x20 [51x508x508]	(4)2x20x20 [51x508x508]
Refrigerant Charge Oz. [g]	179 [5075]	179 [5075]	197 [5585]	197 [5585]
Weights				
Net Weight lbs. [kg]	785 [356]	786 [357]	811 [368]	821 [372]
Ship Weight lbs. [kg]	824 [374]	825 [374]	850 [386]	860 [390]

See Page 31 for Notes.

[ ] Designates Metric Conversions

NOM. SIZES 7.5-10 TONS [26.4-35.1 kW] ASHRAE 90.1-2007 COMPLIANT MODELS

Model RHPDZT Series	102ACH	102ADF	102ADG	102ADH
Cooling Performance[1]				CONTINUED →
Gross Cooling Capacity Btu [kW]	101,000 [29.59]	101,000 [29.59]	101,000 [29.59]	101,000 [29.59]
EER/SEER[2]	11/NA	11/NA	11/NA	11/NA
Nominal CFM/AHRI Rated CFM [L/s]	3400/3345 [1604/1579]	3400/3345 [1604/1579]	3400/3345 [1604/1579]	3400/3345 [1604/1579]
AHRI Net Cooling Capacity Btu [kW]	98,000 [28.71]	98,000 [28.71]	98,000 [28.71]	98,000 [28.71]
Net Sensible Capacity Btu [kW]	71,000 [20.8]	71,000 [20.8]	71,000 [20.8]	71,000 [20.8]
Net Latent Capacity Btu [kW]	27,000 [7.91]	27,000 [7.91]	27,000 [7.91]	27,000 [7.91]
IEER[3]	14.1	14.1	14.1	14.1
Net System Power kW	8.47	8.47	8.47	8.47
Heating Performance (Heat Pumps)				
High Temp. Btuh [kW] Rating	98,000 [28.71]	98,000 [28.71]	98,000 [28.71]	98,000 [28.71]
System Power KW / COP	7.99/3.4	7.99/3.4	7.99/3.4	7.99/3.4
Low Temp. Btuh [kW] Rating	60,000 [17.58]	60,000 [17.58]	60,000 [17.58]	60,000 [17.58]
System Power KW / COP	7.54/2.3	7.54/2.3	7.54/2.3	7.54/2.3
Compressor				
No./Type	1/Scroll	1/Scroll	1/Scroll	1/Scroll
Outdoor Sound Rating (dB)[4]	88	88	88	88
Outdoor Coil - Fin Type	Louvered	Louvered	Louvered	Louvered
Tube Type	MicroChannel	MicroChannel	MicroChannel	MicroChannel
MicroChannel Depth in. [mm]	1.26 [32]	1.26 [32]	1.26 [32]	1.26 [32]
Face Area sq. ft. [sq. m]	22.4 [2.08]	22.4 [2.08]	22.4 [2.08]	22.4 [2.08]
Rows / FPI [FPcm]	1 / 16 [6]	1 / 16 [6]	1 / 16 [6]	1 / 16 [6]
Refrigerant Control	TX Valves	TX Valves	TX Valves	TX Valves
Indoor Coil - Fin Type	Louvered	Louvered	Louvered	Louvered
Tube Type	MicroChannel	MicroChannel	MicroChannel	MicroChannel
MicroChannel Depth in. [mm]	1.26 [32]	1.26 [32]	1.26 [32]	1.26 [32]
Face Area sq. ft. [sq. m]	10.9 [1.01]	10.9 [1.01]	10.9 [1.01]	10.9 [1.01]
Rows / FPI [FPcm]	1 / 20 [8]	1 / 20 [8]	1 / 20 [8]	1 / 20 [8]
Refrigerant Control	TX Valves	TX Valves	TX Valves	TX Valves
Drain Connection No./Size in. [mm]	1/0.75 [19.05]	1/0.75 [19.05]	1/0.75 [19.05]	1/0.75 [19.05]
Outdoor Fan - Type	Propeller	Propeller	Propeller	Propeller
No. Used/Diameter in. [mm]	2/24 [609.6]	2/24 [609.6]	2/24 [609.6]	2/24 [609.6]
Drive Type/No. Speeds	Direct/1	Direct/1	Direct/1	Direct/1
CFM [L/s]	8000 [3775]	8000 [3775]	8000 [3775]	8000 [3775]
No. Motors/HP	2 at 1/2 HP	2 at 1/2 HP	2 at 1/2 HP	2 at 1/2 HP
Motor RPM	1075	1075	1075	1075
Indoor Fan - Type	FC Centrifugal	FC Centrifugal	FC Centrifugal	FC Centrifugal
No. Used/Diameter in. [mm]	1/15x15 [381x381]	1/15x15 [381x381]	1/15x15 [381x381]	1/15x15 [381x381]
Drive Type	Belt (Adjustable)	Belt (Adjustable)	Belt (Adjustable)	Belt (Adjustable)
No. Speeds	Single	Single	Single	Single
No. Motors	1	1	1	1
Motor HP	3	2	3	3
Motor RPM	1725	1725	1725	1725
Motor Frame Size	56	56	56	56
Filter - Type	Disposable	Disposable	Disposable	Disposable
Furnished	Yes	Yes	Yes	Yes
(NO.) Size Recommended in. [mm x mm x mm]	(4)2x20x20 [51x508x508]	(4)2x20x20 [51x508x508]	(4)2x20x20 [51x508x508]	(4)2x20x20 [51x508x508]
Refrigerant Charge Oz. [g]	197 [5585]	197 [5585]	197 [5585]	197 [5585]
Weights				
Net Weight lbs. [kg]	822 [373]	811 [368]	821 [372]	822 [373]
Ship Weight lbs. [kg]	861 [391]	850 [386]	860 [390]	861 [391]

See Page 31 for Notes.

[ ] Designates Metric Conversions

NOM. SIZES 7.5-10 TONS [26.4-35.1 kW] ASHRAE 90.1-2007 COMPLIANT MODELS

Model RHPDZT Series	120ACF	120ACG	120ACH	120ADF
Cooling Performance[1]				CONTINUED →
Gross Cooling Capacity Btu [kW]	119,000 [34.87]	119,000 [34.87]	119,000 [34.87]	119,000 [34.87]
EER/SEER[2]	11/NA	11/NA	11/NA	11/NA
Nominal CFM/AHRI Rated CFM [L/s]	4000/4060 [1888/1916]	4000/4060 [1888/1916]	4000/4060 [1888/1916]	4000/4060 [1888/1916]
AHRI Net Cooling Capacity Btu [kW]	114,000 [33.4]	114,000 [33.4]	114,000 [33.4]	114,000 [33.4]
Net Sensible Capacity Btu [kW]	82,800 [24.26]	82,800 [24.26]	82,800 [24.26]	82,800 [24.26]
Net Latent Capacity Btu [kW]	31,200 [9.14]	31,200 [9.14]	31,200 [9.14]	31,200 [9.14]
IEER[3]	14.1	14.1	14.1	14.1
Net System Power kW	10.13	10.13	10.13	10.13
Heating Performance (Heat Pumps)				
High Temp. Btuh [kW] Rating	114,000 [33.4]	114,000 [33.4]	114,000 [33.4]	114,000 [33.4]
System Power KW / COP	9.03/3.4	9.03/3.4	9.03/3.4	9.03/3.4
Low Temp. Btuh [kW] Rating	72,000 [21.1]	72,000 [21.1]	72,000 [21.1]	72,000 [21.1]
System Power KW / COP	8.3/2.3	8.3/2.3	8.3/2.3	8.3/2.3
Compressor				
No./Type	1/Scroll	1/Scroll	1/Scroll	1/Scroll
Outdoor Sound Rating (dB)[4]	88	88	88	88
Outdoor Coil - Fin Type	Louvered	Louvered	Louvered	Louvered
Tube Type	MicroChannel	MicroChannel	MicroChannel	MicroChannel
MicroChannel Depth in. [mm]	1.26 [32]	1.26 [32]	1.26 [32]	1.26 [32]
Face Area sq. ft. [sq. m]	28.8 [2.68]	28.8 [2.68]	28.8 [2.68]	28.8 [2.68]
Rows / FPI [FPcm]	1 / 16 [6]	1 / 16 [6]	1 / 16 [6]	1 / 16 [6]
Refrigerant Control	TX Valves	TX Valves	TX Valves	TX Valves
Indoor Coil - Fin Type	Louvered	Louvered	Louvered	Louvered
Tube Type	MicroChannel	MicroChannel	MicroChannel	MicroChannel
MicroChannel Depth in. [mm]	1.26 [32]	1.26 [32]	1.26 [32]	1.26 [32]
Face Area sq. ft. [sq. m]	13.2 [1.23]	13.2 [1.23]	13.2 [1.23]	13.2 [1.23]
Rows / FPI [FPcm]	1 / 20 [8]	1 / 20 [8]	1 / 20 [8]	1 / 20 [8]
Refrigerant Control	TX Valves	TX Valves	TX Valves	TX Valves
Drain Connection No./Size in. [mm]	1/0.75 [19.05]	1/0.75 [19.05]	1/0.75 [19.05]	1/0.75 [19.05]
Outdoor Fan - Type	Propeller	Propeller	Propeller	Propeller
No. Used/Diameter in. [mm]	2/24 [609.6]	2/24 [609.6]	2/24 [609.6]	2/24 [609.6]
Drive Type/No. Speeds	Direct/1	Direct/1	Direct/1	Direct/1
CFM [L/s]	8000 [3775]	8000 [3775]	8000 [3775]	8000 [3775]
No. Motors/HP	2 at 1/2 HP	2 at 1/2 HP	2 at 1/2 HP	2 at 1/2 HP
Motor RPM	1075	1075	1075	1075
Indoor Fan - Type	FC Centrifugal	FC Centrifugal	FC Centrifugal	FC Centrifugal
No. Used/Diameter in. [mm]	1/15x15 [381x381]	1/15x15 [381x381]	1/15x15 [381x381]	1/15x15 [381x381]
Drive Type	Belt (Adjustable)	Belt (Adjustable)	Belt (Adjustable)	Belt (Adjustable)
No. Speeds	Single	Single	Single	Single
No. Motors	1	1	1	1
Motor HP	2	3	3	2
Motor RPM	1725	1725	1725	1725
Motor Frame Size	56	56	56	56
Filter - Type	Disposable	Disposable	Disposable	Disposable
Furnished	Yes	Yes	Yes	Yes
(NO.) Size Recommended in. [mm x mm x mm]	(4)2x25x20 [51x635x508]	(4)2x25x20 [51x635x508]	(4)2x25x20 [51x635x508]	(4)2x25x20 [51x635x508]
Refrigerant Charge Oz. [g]	213 [6039]	213 [6039]	213 [6039]	213 [6039]
Weights				
Net Weight lbs. [kg]	863 [391]	873 [396]	874 [396]	863 [391]
Ship Weight lbs. [kg]	902 [409]	912 [414]	913 [414]	902 [409]

See Page 31 for Notes.

[ ] Designates Metric Conversions

NOM. SIZES 7.5-10 TONS [26.4-35.1 kW] ASHRAE 90.1-2007 COMPLIANT MODELS

Model RHPDZT Series	120ADG	120ADH
Cooling Performance[1]		
Gross Cooling Capacity Btu [kW]	119,000 [34.87]	119,000 [34.87]
EER/SEER[2]	11/NA	11/NA
Nominal CFM/AHRI Rated CFM [L/s]	4000/4060 [1888/1916]	4000/4060 [1888/1916]
AHRI Net Cooling Capacity Btu [kW]	114,000 [33.4]	114,000 [33.4]
Net Sensible Capacity Btu [kW]	82,800 [24.26]	82,800 [24.26]
Net Latent Capacity Btu [kW]	31,200 [9.14]	31,200 [9.14]
IEER[3]	14.1	14.1
Net System Power kW	10.13	10.13
Heating Performance (Heat Pumps)		
High Temp. Btuh [kW] Rating	114,000 [33.4]	114,000 [33.4]
System Power KW / COP	9.03/3.4	9.03/3.4
Low Temp. Btuh [kW] Rating	72,000 [21.1]	72,000 [21.1]
System Power KW / COP	8.3/2.3	8.3/2.3
Compressor		
No./Type	1/Scroll	1/Scroll
Outdoor Sound Rating (dB)[4]	88	88
Outdoor Coil - Fin Type	Louvered	Louvered
Tube Type	MicroChannel	MicroChannel
MicroChannel Depth in. [mm]	1.26 [32]	1.26 [32]
Face Area sq. ft. [sq. m]	28.8 [2.68]	28.8 [2.68]
Rows / FPI [FPcm]	1 / 16 [6]	1 / 16 [6]
Refrigerant Control	TX Valves	TX Valves
Indoor Coil - Fin Type	Louvered	Louvered
Tube Type	MicroChannel	MicroChannel
MicroChannel Depth in. [mm]	1.26 [32]	1.26 [32]
Face Area sq. ft. [sq. m]	13.2 [1.23]	13.2 [1.23]
Rows / FPI [FPcm]	1 / 20 [8]	1 / 20 [8]
Refrigerant Control	TX Valves	TX Valves
Drain Connection No./Size in. [mm]	1/0.75 [19.05]	1/0.75 [19.05]
Outdoor Fan - Type	Propeller	Propeller
No. Used/Diameter in. [mm]	2/24 [609.6]	2/24 [609.6]
Drive Type/No. Speeds	Direct/1	Direct/1
CFM [L/s]	8000 [3775]	8000 [3775]
No. Motors/HP	2 at 1/2 HP	2 at 1/2 HP
Motor RPM	1075	1075
Indoor Fan - Type	FC Centrifugal	FC Centrifugal
No. Used/Diameter in. [mm]	1/15x15 [381x381]	1/15x15 [381x381]
Drive Type	Belt (Adjustable)	Belt (Adjustable)
No. Speeds	Single	Single
No. Motors	1	1
Motor HP	3	3
Motor RPM	1725	1725
Motor Frame Size	56	56
Filter - Type	Disposable	Disposable
Furnished	Yes	Yes
(NO.) Size Recommended in. [mm x mm x mm]	(4)2x25x20 [51x635x508]	(4)2x25x20 [51x635x508]
Refrigerant Charge Oz. [g]	213 [6039]	213 [6039]
Weights		
Net Weight lbs. [kg]	873 [396]	874 [396]
Ship Weight lbs. [kg]	912 [414]	913 [414]

See Page 31 for Notes.

[ ] Designates Metric Conversions

NOTES:

1. Cooling Performance is rated at 95° F ambient, 80° F entering dry bulb, 67° F entering wet bulb. Gross capacity does not include the effect of fan motor heat. AHRI capacity is net and includes the effect of fan motor heat. Units are suitable for operation to ±20% of nominal cfm. Units are certified in accordance with the Unitary Air Conditioner Equipment certification program, which is based on AHRI Standard 340/360.
2. EER and/or SEER are rated at AHRI conditions and in accordance with DOE test procedures.
3. Integrated Energy Efficiency Ratio (IEER) is rated in accordance with AHRI Standard 340/360.
4. Outdoor Sound Rating shown is tested in accordance with AHRI Standard 270.

[ ] Designates Metric Conversions

COOLING PERFORMANCE DATA—RHPDZS090A

ENTERING INDOOR AIR @ 80°F [26.7°C] dbE ①																	
wbE			71°F [21.7°C]			67°F [19.4°C]			63°F [17.2°C]			61°F [16.1°C]			59°F [15.0°C]		
CFM [L/s]			3600 [1699]	3030 [1430]	2400 [1133]	3600 [1699]	3030 [1430]	2400 [1133]	3600 [1699]	3030 [1430]	2400 [1133]	3600 [1699]	3030 [1430]	2400 [1133]	3600 [1699]	3030 [1430]	2400 [1133]
DR ①			0.21	0.18	0.13	0.21	0.18	0.13	0.21	0.18	0.13	0.21	0.18	0.13	0.21	0.18	0.13
OUTDOOR DRY BULB TEMPERATURE °F [°C]	75 [23.9]	Total BTUH [kW]	108.7 [31.8]	105.1 [30.8]	101.1 [29.6]	102.4 [30.0]	99.1 [29.0]	95.3 [27.9]	97.5 [28.6]	94.3 [27.6]	90.7 [26.6]	95.7 [28.0]	92.5 [27.1]	89.0 [26.1]	94.5 [27.7]	91.4 [26.8]	87.9 [25.8]
		Sens BTUH [kW]	62.9 [18.4]	57.8 [16.9]	52.2 [15.3]	75.7 [22.2]	69.6 [20.4]	62.8 [18.4]	85.9 [25.2]	78.9 [23.1]	71.3 [20.9]	89.6 [26.2]	82.3 [24.1]	74.4 [21.8]	92.0 [27.0]	84.6 [24.8]	76.4 [22.4]
		Power	5.7	5.6	5.5	5.6	5.5	5.4	5.6	5.5	5.4	5.6	5.5	5.4	5.5	5.5	5.4
	80 [26.7]	Total BTUH [kW]	106.3 [31.1]	102.8 [30.1]	98.9 [29.0]	100.1 [29.3]	96.8 [28.4]	93.1 [27.3]	95.1 [27.9]	92.0 [27.0]	88.5 [25.9]	93.3 [27.3]	90.2 [26.4]	86.8 [25.4]	92.1 [27.0]	89.1 [26.1]	85.7 [25.1]
		Sens BTUH [kW]	62.2 [18.2]	57.2 [16.8]	51.6 [15.1]	75.0 [22.0]	68.9 [20.2]	62.2 [18.2]	85.2 [25.0]	78.3 [22.9]	70.7 [20.7]	88.9 [26.0]	81.7 [23.9]	73.8 [21.6]	91.3 [26.8]	83.9 [24.6]	75.8 [22.2]
		Power	5.9	5.8	5.7	5.9	5.8	5.7	5.8	5.8	5.6	5.8	5.7	5.6	5.8	5.7	5.6
	85 [29.4]	Total BTUH [kW]	103.7 [30.4]	100.3 [29.4]	96.5 [28.3]	97.5 [28.6]	94.3 [27.6]	90.7 [26.6]	92.6 [27.1]	89.5 [26.2]	86.1 [25.2]	90.8 [26.6]	87.8 [25.7]	84.5 [24.8]	89.6 [26.3]	86.6 [25.4]	83.4 [24.4]
		Sens BTUH [kW]	61.3 [17.9]	56.3 [16.5]	50.8 [14.9]	74.0 [21.7]	68.1 [19.9]	61.5 [18.0]	84.2 [24.7]	77.4 [22.7]	69.9 [20.5]	87.9 [25.8]	80.8 [23.7]	73.0 [21.4]	89.6 [26.3]	83.1 [24.3]	75.0 [22.0]
		Power	6.2	6.1	6.0	6.2	6.1	6.0	6.1	6.0	5.9	6.1	6.0	5.9	6.1	6.0	5.9
	90 [32.2]	Total BTUH [kW]	101.1 [29.6]	97.7 [28.6]	94.0 [27.6]	94.8 [27.8]	91.7 [26.9]	88.2 [25.9]	89.9 [26.3]	86.9 [25.5]	83.6 [24.5]	88.1 [25.8]	85.2 [25.0]	82.0 [24.0]	86.9 [25.5]	84.0 [24.6]	80.9 [23.7]
		Sens BTUH [kW]	60.1 [17.6]	55.2 [16.2]	49.9 [14.6]	72.9 [21.4]	67.0 [19.6]	60.5 [17.7]	83.1 [24.3]	76.4 [22.4]	69.0 [20.2]	86.8 [25.4]	79.8 [23.4]	72.0 [21.1]	86.9 [25.5]	82.0 [24.0]	74.1 [21.7]
		Power	6.5	6.4	6.3	6.5	6.4	6.3	6.4	6.3	6.2	6.4	6.3	6.2	6.4	6.3	6.2
	95 [35]	Total BTUH [kW]	98.2 [28.8]	95 [27.8]	91.4 [26.8]	92.0 [27.0]	88.9 [26.1]	85.6 [25.1]	87.0 [25.5]	84.2 [24.7]	81.0 [23.7]	85.2 [25.0]	82.4 [24.2]	79.3 [23.2]	84.1 [24.6]	81.3 [23.8]	78.2 [22.9]
		Sens BTUH [kW]	58.7 [17.2]	54 [15.8]	48.8 [14.3]	71.5 [21.0]	65.7 [19.3]	59.4 [17.4]	81.7 [23.9]	75.1 [22.0]	67.8 [19.9]	85.2 [25.0]	78.5 [23.0]	70.9 [20.8]	84.1 [24.6]	80.8 [23.7]	72.9 [21.4]
		Power	6.8	6.7	6.6	6.8	6.7	6.6	6.8	6.6	6.5	6.7	6.6	6.5	6.7	6.6	6.5
	100 [37.8]	Total BTUH [kW]	95.2 [27.9]	92.0 [27.0]	88.6 [26.0]	89.0 [26.1]	86.0 [25.2]	82.8 [24.3]	84.0 [24.6]	81.3 [23.8]	78.2 [22.9]	82.2 [24.1]	79.5 [23.3]	76.5 [22.4]	81.1 [23.8]	78.4 [23.0]	75.4 [22.1]
		Sens BTUH [kW]	57.1 [16.7]	52.5 [15.4]	47.4 [13.9]	69.9 [20.5]	64.3 [18.8]	58.0 [17.0]	80.1 [23.5]	73.7 [21.6]	66.5 [19.5]	82.2 [24.1]	77.1 [22.6]	69.6 [20.4]	81.1 [23.8]	78.4 [23.0]	71.6 [21.0]
		Power	7.2	7.1	6.9	7.1	7.0	6.9	7.1	7.0	6.9	7.1	7.0	6.8	7.1	6.9	6.8
	105 [40.6]	Total BTUH [kW]	92.0 [27.0]	89.0 [26.1]	85.6 [25.1]	85.8 [25.1]	83.0 [24.3]	79.8 [23.4]	80.9 [23.7]	78.2 [22.9]	75.2 [22.0]	79.1 [23.2]	76.5 [22.4]	73.6 [21.6]	77.9 [22.8]	75.3 [22.1]	72.5 [21.2]
		Sens BTUH [kW]	55.3 [16.2]	50.9 [14.9]	45.9 [13.5]	68.1 [20.0]	62.6 [18.4]	56.6 [16.6]	78.3 [23.0]	72.0 [21.1]	65.0 [19.1]	79.1 [23.2]	75.4 [22.1]	68.1 [19.9]	77.9 [22.8]	75.3 [22.1]	70.1 [20.5]
		Power	7.6	7.4	7.3	7.5	7.4	7.3	7.5	7.4	7.2	7.5	7.3	7.2	7.4	7.3	7.2
	110 [43.3]	Total BTUH [kW]	88.7 [26.0]	85.8 [25.1]	82.5 [24.2]	82.5 [24.2]	79.8 [23.4]	76.7 [22.5]	77.5 [22.7]	75.0 [22.0]	72.1 [21.1]	75.8 [22.2]	73.2 [21.5]	70.5 [20.7]	74.6 [21.9]	72.1 [21.1]	69.4 [20.3]
		Sens BTUH [kW]	53.3 [15.6]	49.0 [14.4]	44.3 [13.0]	66.1 [19.4]	60.8 [17.8]	54.9 [16.1]	76.3 [22.4]	70.1 [20.6]	63.3 [18.6]	75.8 [22.2]	73.2 [21.5]	66.4 [19.5]	74.6 [21.9]	72.1 [21.1]	68.4 [20.1]
		Power	8.0	7.8	7.7	7.9	7.8	7.6	7.9	7.7	7.6	7.8	7.7	7.6	7.8	7.7	7.6
	115 [46.1]	Total BTUH [kW]	85.2 [25.0]	82.4 [24.1]	79.3 [23.2]	79.0 [23.2]	76.4 [22.4]	73.5 [21.5]	74.1 [21.7]	71.6 [21.0]	68.9 [20.2]	72.3 [21.2]	69.9 [20.5]	67.2 [19.7]	71.1 [20.8]	68.7 [20.1]	66.1 [19.4]
		Sens BTUH [kW]	51.1 [15.0]	47.0 [13.8]	42.4 [12.4]	63.9 [18.7]	58.7 [17.2]	53.0 [15.5]	74.1 [21.7]	68.1 [19.9]	61.5 [18.0]	72.3 [21.2]	69.9 [20.5]	64.5 [18.9]	71.1 [20.8]	68.7 [20.1]	66.1 [19.4]
		Power	8.4	8.2	8.1	8.3	8.2	8.0	8.3	8.1	8.0	8.3	8.1	8.0	8.2	8.1	8.0
	120 [48.9]	Total BTUH [kW]	81.6 [23.9]	78.9 [23.1]	75.9 [22.2]	75.4 [22.1]	72.9 [21.4]	70.1 [20.5]	70.4 [20.6]	68.1 [20.0]	65.5 [19.2]	68.6 [20.1]	66.4 [19.4]	63.9 [18.7]	67.4 [19.8]	65.2 [19.1]	62.8 [18.4]
		Sens BTUH [kW]	48.6 [14.2]	44.7 [13.1]	40.4 [11.8]	61.4 [18.0]	56.5 [16.5]	51.0 [14.9]	70.4 [20.6]	65.8 [19.3]	59.4 [17.4]	68.6 [20.1]	66.4 [19.4]	62.5 [18.3]	67.4 [19.8]	65.2 [19.1]	62.8 [18.4]
		Power	8.8	8.7	8.5	8.8	8.6	8.5	8.7	8.6	8.4	8.7	8.6	8.4	8.7	8.5	8.4
	125 [51.7]	Total BTUH [kW]	77.8 [22.8]	75.2 [22.0]	72.4 [21.2]	71.6 [21.0]	69.2 [20.3]	66.6 [19.5]	66.6 [19.5]	64.4 [18.9]	62.0 [18.2]	64.8 [19.0]	62.7 [18.4]	60.3 [17.7]	63.7 [18.7]	61.5 [18.0]	59.2 [17.4]
		Sens BTUH [kW]	45.9 [13.5]	42.2 [12.4]	38.1 [11.2]	58.7 [17.2]	54.0 [15.8]	48.8 [14.3]	66.6 [19.5]	63.4 [18.6]	57.2 [16.8]	64.8 [19.0]	62.7 [18.4]	60.3 [17.7]	63.7 [18.7]	61.5 [18.0]	59.2 [17.4]
		Power	9.3	9.1	8.9	9.2	9.1	8.9	9.2	9.0	8.9	9.2	9.0	8.8	9.1	9.0	8.8

DR —Depression ratio
dbE —Entering air dry bulb
wbE—Entering air wet bulb.

Total —Total capacity x 1000 BTUH
Sens —Sensible capacity x 1000 BTUH
Power —KW input

NOTES: ① When the entering air dry bulb is other than 80°F [27°C], adjust the sensible capacity from the table by adding [1.10 x CFM x (1 – DR) x (dbE – 80)].

[ ] Designates Metric Conversions

HEATING PERFORMANCE DATA—RHPDZS090A

IDB			60°F [15.5°C]			70°F [21.1°C]			80°F [26.7°C]		
CFM [L/s]			3600 [1699]	3030 [1430]	2400 [1133]	3600 [1699]	3030 [1430]	2400 [1133]	3600 [1699]	3030 [1430]	2400 [1133]
OUTDOOR DRY BULB TEMPERATURE °F [°C]	0°F [-17.8°C]	Total BTUH [kW]	29.9 [8.8]	29.5 [8.7]	29.1 [8.5]	27.8 [8.1]	27.4 [8.0]	27.0 [7.9]	25.6 [7.5]	25.3 [7.4]	24.9 [7.3]
		Power	4.8	5.0	5.1	5.4	5.5	5.7	6.1	6.2	6.4
	5°F [-15.0°C]	Total BTUH [kW]	35.9 [10.5]	35.5 [10.4]	34.9 [10.2]	33.8 [9.9]	33.3 [9.8]	32.8 [9.6]	31.6 [9.3]	31.2 [9.1]	30.7 [9.0]
		Power	4.9	5.0	5.1	5.4	5.6	5.7	6.1	6.3	6.4
	10°F [-12.2°C]	Total BTUH [kW]	41.9 [12.3]	41.4 [12.1]	40.8 [11.9]	39.8 [11.7]	39.2 [11.5]	38.7 [11.3]	37.6 [11.0]	37.1 [10.9]	36.6 [10.7]
		Power	4.9	5.1	5.2	5.5	5.6	5.8	6.2	6.3	6.5
	15°F [-9.4°C]	Total BTUH [kW]	47.9 [14.0]	47.3 [13.9]	46.6 [13.7]	45.8 [13.4]	45.2 [13.2]	44.5 [13.0]	43.6 [12.8]	43.0 [12.6]	42.4 [12.4]
		Power	5.0	5.1	5.2	5.5	5.7	5.8	6.2	6.4	6.5
	20°F [-6.7°C]	Total BTUH [kW]	53.9 [15.8]	53.2 [15.6]	52.4 [15.4]	51.8 [15.2]	51.1 [15.0]	50.3 [14.7]	49.6 [14.5]	49.0 [14.3]	48.2 [14.1]
		Power	5.0	5.2	5.3	5.6	5.7	5.9	6.3	6.4	6.6
	25°F [-3.9°C]	Total BTUH [kW]	59.9 [17.6]	59.1 [17.3]	58.3 [17.1]	57.8 [16.9]	57.0 [16.7]	56.2 [16.5]	55.6 [16.3]	54.9 [16.1]	54.1 [15.8]
		Power	5.1	5.2	5.3	5.6	5.8	5.9	6.3	6.5	6.6
	30°F [-1.1°C]	Total BTUH [kW]	65.9 [19.3]	65.1 [19.1]	64.1 [18.8]	63.8 [18.7]	62.9 [18.4]	62.0 [18.2]	61.6 [18.1]	60.8 [17.8]	59.9 [17.6]
		Power	5.1	5.3	5.4	5.7	5.8	6.0	6.4	6.5	6.7
	35°F [1.7°C]	Total BTUH [kW]	71.9 [21.1]	71.0 [20.8]	69.9 [20.5]	69.8 [20.4]	68.8 [20.2]	67.8 [19.9]	67.6 [19.8]	66.7 [19.6]	65.7 [19.3]
		Power	5.2	5.3	5.4	5.7	5.9	6.0	6.4	6.6	6.7
	40°F [4.4°C]	Total BTUH [kW]	77.9 [22.8]	76.9 [22.5]	75.8 [22.2]	75.8 [22.2]	74.8 [21.9]	73.7 [21.6]	73.6 [21.6]	72.6 [21.3]	71.6 [21.0]
		Power	5.2	5.4	5.5	5.8	5.9	6.1	6.5	6.6	6.8
	45°F [7.2°C]	Total BTUH [kW]	83.9 [24.6]	82.8 [24.3]	81.6 [23.9]	81.8 [24.0]	80.7 [23.6]	79.5 [23.3]	79.6 [23.3]	78.6 [23.0]	77.4 [22.7]
		Power	5.3	5.4	5.5	5.8	6.0	6.1	6.5	6.7	6.8
	50°F [10.0°C]	Total BTUH [kW]	89.9 [26.4]	88.7 [26.0]	87.4 [25.6]	87.8 [25.7]	86.6 [25.4]	85.3 [25.0]	85.6 [25.1]	84.5 [24.8]	83.2 [24.4]
		Power	5.3	5.5	5.6	5.9	6.0	6.2	6.6	6.7	6.9

IDB—Indoor air dry bulb

[ ] Designates Metric Conversions

COOLING PERFORMANCE DATA—RHPDZS102A

		ENTERING INDOOR AIR @ 80°F [26.7°C] dbE ①															
	wbE	71°F [21.7°C]			67°F [19.4°C]			63°F [17.2°C]			61°F [16.1°C]			59°F [15.0°C]		
	CFM [L/s]	3840 [1812]	3345 [1579]	2560 [1208]	3840 [1812]	3345 [1579]	2560 [1208]	3840 [1812]	3345 [1579]	2560 [1208]	3840 [1812]	3345 [1579]	2560 [1208]	3840 [1812]	3345 [1579]	2560 [1208]
	DR ①	0.19	0.17	0.12	0.19	0.17	0.12	0.19	0.17	0.12	0.19	0.17	0.12	0.19	0.17	0.12
OUTDOOR DRY BULB TEMPERATURE °F [°C]	75 [23.9] Total BTUH [kW]	121.8 [35.7]	118.6 [34.8]	113.6 [33.3]	116.1 [34.0]	113.0 [33.1]	108.2 [31.7]	110.0 [32.2]	107.1 [31.4]	102.5 [30.0]	106.8 [31.3]	104.0 [30.5]	99.6 [29.2]	103.7 [30.4]	100.9 [29.6]	96.6 [28.3]
	Sens BTUH [kW]	75.6 [22.2]	70.7 [20.7]	63.0 [18.5]	85.1 [24.9]	79.6 [23.3]	70.9 [20.8]	92.9 [27.2]	86.9 [25.5]	77.4 [22.7]	95.9 [28.1]	89.7 [26.3]	79.9 [23.4]	98.1 [28.8]	91.8 [26.9]	81.7 [23.9]
	Power	6.4	6.3	6.1	6.3	6.2	6.1	6.3	6.2	6.1	6.2	6.2	6.0	6.2	6.1	6.0
	80 [26.7] Total BTUH [kW]	118.9 [34.8]	115.8 [33.9]	110.8 [32.5]	113.1 [33.1]	110.2 [32.3]	105.5 [30.9]	107.0 [31.4]	104.2 [30.5]	99.8 [29.2]	103.9 [30.5]	101.2 [29.7]	96.9 [28.4]	100.7 [29.5]	98.1 [28.7]	93.9 [27.5]
	Sens BTUH [kW]	74.4 [21.8]	69.6 [20.4]	62.0 [18.2]	83.9 [24.6]	78.5 [23.0]	69.9 [20.5]	91.7 [26.9]	85.8 [25.1]	76.4 [22.4]	94.7 [27.8]	88.6 [26.0]	78.9 [23.1]	96.9 [28.4]	90.7 [26.6]	80.7 [23.7]
	Power	6.7	6.6	6.4	6.6	6.5	6.4	6.6	6.5	6.3	6.5	6.4	6.3	6.5	6.4	6.3
	85 [29.4] Total BTUH [kW]	115.9 [34.0]	112.8 [33.1]	108.0 [31.7]	110.1 [32.3]	107.2 [31.4]	102.6 [30.1]	104.0 [30.5]	101.3 [29.7]	97.0 [28.4]	100.9 [29.6]	98.2 [28.8]	94.1 [27.6]	97.7 [28.6]	95.1 [27.9]	91.1 [26.7]
	Sens BTUH [kW]	73.0 [21.4]	68.3 [20.0]	60.8 [17.8]	82.5 [24.2]	77.2 [22.6]	68.7 [20.1]	90.3 [26.5]	84.5 [24.8]	75.2 [22.1]	93.3 [27.4]	87.3 [25.6]	77.8 [22.8]	95.5 [28.0]	89.4 [26.2]	79.6 [23.3]
	Power	7.0	6.9	6.7	6.9	6.8	6.7	6.9	6.8	6.7	6.9	6.8	6.6	6.8	6.7	6.6
	90 [32.2] Total BTUH [kW]	112.8 [33.0]	109.8 [32.2]	105.1 [30.8]	107.0 [31.4]	104.2 [30.5]	99.7 [29.2]	100.9 [29.6]	98.3 [28.8]	94.1 [27.6]	97.8 [28.7]	95.2 [27.9]	91.2 [26.7]	94.6 [27.7]	92.1 [27.0]	88.2 [25.8]
	Sens BTUH [kW]	71.4 [20.9]	66.8 [19.6]	59.5 [17.4]	80.9 [23.7]	75.7 [22.2]	67.4 [19.8]	88.8 [26.0]	83.0 [24.3]	73.9 [21.7]	91.8 [26.9]	85.8 [25.2]	76.4 [22.4]	94.0 [27.5]	87.9 [25.8]	78.3 [22.9]
	Power	7.3	7.2	7.1	7.3	7.2	7.0	7.2	7.1	7.0	7.2	7.1	7.0	7.2	7.1	6.9
	95 [35] Total BTUH [kW]	109.6 [32.1]	106.7 [31.3]	102.1 [29.9]	103.8 [30.4]	101.1 [29.6]	96.8 [28.4]	97.7 [28.6]	95.2 [27.9]	91.1 [26.7]	94.6 [27.7]	92.1 [27.0]	88.2 [25.8]	91.4 [26.8]	89.0 [26.1]	85.2 [25.0]
	Sens BTUH [kW]	69.7 [20.4]	65.2 [19.1]	58.0 [17.0]	79.2 [23.2]	74.1 [21.7]	66.0 [19.3]	87.0 [25.5]	81.4 [23.9]	72.5 [21.2]	90.0 [26.4]	84.2 [24.7]	75.0 [22.0]	91.4 [26.8]	86.3 [25.3]	76.8 [22.5]
	Power	7.7	7.6	7.5	7.7	7.6	7.4	7.6	7.5	7.4	7.6	7.5	7.3	7.6	7.5	7.3
	100 [37.8] Total BTUH [kW]	106.3 [31.1]	103.5 [30.3]	99.1 [29.0]	100.5 [29.5]	97.9 [28.7]	93.7 [27.5]	94.4 [27.7]	92.0 [26.9]	88.0 [25.8]	91.3 [26.8]	88.9 [26.1]	85.1 [24.9]	88.1 [25.8]	85.8 [25.1]	82.1 [24.1]
	Sens BTUH [kW]	67.7 [19.9]	63.4 [18.6]	56.4 [16.5]	77.2 [22.6]	72.3 [21.2]	64.3 [18.9]	85.1 [24.9]	79.6 [23.3]	70.9 [20.8]	88.1 [25.8]	82.4 [24.1]	73.4 [21.5]	88.1 [25.8]	84.4 [24.7]	75.2 [22.0]
	Power	8.1	8.0	7.9	8.1	8.0	7.8	8.0	7.9	7.8	8.0	7.9	7.7	8.0	7.9	7.7
	105 [40.6] Total BTUH [kW]	102.9 [30.2]	100.2 [29.4]	95.9 [28.1]	97.1 [28.5]	94.6 [27.7]	90.5 [26.5]	91.1 [26.7]	88.7 [26.0]	84.9 [24.9]	87.9 [25.8]	85.6 [25.1]	82.0 [24.0]	84.7 [24.8]	82.5 [24.2]	79.0 [23.1]
	Sens BTUH [kW]	65.6 [19.2]	61.4 [18.0]	54.7 [16.0]	75.1 [22.0]	70.3 [20.6]	62.6 [18.3]	82.9 [24.3]	77.6 [22.7]	69.1 [20.2]	85.9 [25.2]	80.4 [23.6]	71.6 [21.0]	84.7 [24.8]	82.5 [24.2]	73.4 [21.5]
	Power	8.6	8.5	8.3	8.5	8.4	8.2	8.5	8.4	8.2	8.5	8.3	8.2	8.4	8.3	8.1
	110 [43.3] Total BTUH [kW]	99.4 [29.1]	96.8 [28.4]	92.7 [27.2]	93.7 [27.4]	91.2 [26.7]	87.3 [25.6]	87.6 [25.7]	85.3 [25.0]	81.7 [23.9]	84.5 [24.7]	82.2 [24.1]	78.7 [23.1]	81.3 [23.8]	79.1 [23.2]	75.8 [22.2]
	Sens BTUH [kW]	63.3 [18.6]	59.2 [17.4]	52.7 [15.5]	72.8 [21.3]	68.1 [20.0]	60.6 [17.8]	80.6 [23.6]	75.4 [22.1]	67.2 [19.7]	83.6 [24.5]	78.2 [22.9]	69.7 [20.4]	81.3 [23.8]	79.1 [23.2]	71.5 [20.9]
	Power	9.0	8.9	8.7	9.0	8.9	8.7	8.9	8.8	8.6	8.9	8.8	8.6	8.9	8.8	8.6
	115 [46.1] Total BTUH [kW]	95.9 [28.1]	93.4 [27.4]	89.4 [26.2]	90.1 [26.4]	87.8 [25.7]	84.0 [24.6]	84.0 [24.6]	81.8 [24.0]	78.3 [23.0]	80.9 [23.7]	78.8 [23.1]	75.4 [22.1]	77.7 [22.8]	75.7 [22.2]	72.4 [21.2]
	Sens BTUH [kW]	60.8 [17.8]	56.9 [16.7]	50.6 [14.8]	70.3 [20.6]	65.8 [19.3]	58.6 [17.2]	78.1 [22.9]	73.1 [21.4]	65.1 [19.1]	80.9 [23.7]	75.9 [22.2]	67.6 [19.8]	77.7 [22.8]	75.7 [22.2]	69.4 [20.3]
	Power	9.5	9.4	9.2	9.5	9.4	9.2	9.4	9.3	9.1	9.4	9.3	9.1	9.4	9.3	9.1
	120 [48.9] Total BTUH [kW]	92.3 [27.0]	89.8 [26.3]	86.0 [25.2]	86.5 [25.3]	84.2 [24.7]	80.6 [23.6]	80.4 [23.6]	78.3 [22.9]	75.0 [22.0]	77.3 [22.6]	75.2 [22.0]	72.0 [21.1]	74.1 [21.7]	72.1 [21.1]	69.1 [20.2]
	Sens BTUH [kW]	58.1 [17.0]	54.4 [15.9]	48.4 [14.2]	67.6 [19.8]	63.2 [18.5]	56.3 [16.5]	75.4 [22.1]	70.6 [20.7]	62.8 [18.4]	77.3 [22.6]	73.4 [21.5]	65.3 [19.1]	74.1 [21.7]	72.1 [21.1]	67.2 [19.7]
	Power	10.1	9.9	9.7	10.0	9.9	9.7	10.0	9.8	9.6	10.0	9.8	9.6	9.9	9.8	9.6
	125 [51.7] Total BTUH [kW]	88.5 [25.9]	86.2 [25.3]	82.5 [24.2]	82.7 [24.2]	80.6 [23.6]	77.1 [22.6]	76.7 [22.5]	74.7 [21.9]	71.5 [20.9]	73.5 [21.5]	71.6 [21.0]	68.6 [20.1]	70.3 [20.6]	68.5 [20.1]	65.6 [19.2]
	Sens BTUH [kW]	55.2 [16.2]	51.7 [15.1]	46.0 [13.5]	64.7 [19.0]	60.5 [17.7]	53.9 [15.8]	72.6 [21.3]	67.9 [19.9]	60.4 [17.7]	73.5 [21.5]	70.7 [20.7]	62.9 [18.4]	70.3 [20.6]	68.5 [20.1]	64.8 [19.0]
	Power	10.6	10.5	10.3	10.6	10.4	10.2	10.5	10.4	10.2	10.5	10.4	10.2	10.5	10.4	10.1

DR —Depression ratio
dbE —Entering air dry bulb
wbE—Entering air wet bulb.

Total —Total capacity x 1000 BTUH
Sens —Sensible capacity x 1000 BTUH
Power —KW input

NOTES: ① When the entering air dry bulb is other than 80°F [27°C], adjust the sensible capacity from the table by adding [1.10 x CFM x (1 – DR) x (dbE – 80)].

[ ] Designates Metric Conversions

HEATING PERFORMANCE DATA—RHPDZS102A

IDB			60°F [15.5°C]			70°F [21.1°C]			80°F [26.7°C]		
CFM [L/s]			3840 [1812]	3345 [1579]	2560 [1208]	3840 [1812]	3345 [1579]	2560 [1208]	3840 [1812]	3345 [1579]	2560 [1208]
OUTDOOR DRY BULB TEMPERATURE °F [°C]	0°F [-17.8°C]	Total BTUH [kW]	59.6 [17.5]	59.0 [17.3]	58.0 [17.0]	64.6 [18.9]	63.9 [18.7]	62.9 [18.4]	69.6 [20.4]	68.9 [20.2]	67.8 [19.9]
		Power	5.7	5.8	6.0	6.3	6.4	6.6	7.0	7.1	7.3
	5°F [-15.0°C]	Total BTUH [kW]	62.9 [18.4]	62.3 [18.2]	61.2 [17.9]	67.9 [19.9]	67.2 [19.7]	66.1 [19.4]	73.0 [21.4]	72.2 [21.2]	71.0 [20.8]
		Power	5.8	5.9	6.1	6.4	6.5	6.7	7.1	7.2	7.4
	10°F [-12.2°C]	Total BTUH [kW]	66.3 [19.4]	65.6 [19.2]	64.5 [18.9]	71.3 [20.9]	70.5 [20.7]	69.4 [20.3]	76.3 [22.4]	75.5 [22.1]	74.2 [21.8]
		Power	5.8	6.0	6.1	6.4	6.6	6.7	7.1	7.3	7.5
	15°F [-9.4°C]	Total BTUH [kW]	69.6 [20.4]	68.9 [20.2]	67.7 [19.8]	74.6 [21.9]	73.8 [21.6]	72.6 [21.3]	79.6 [23.3]	78.8 [23.1]	77.5 [22.7]
		Power	5.9	6.0	6.2	6.5	6.6	6.8	7.2	7.4	7.6
	20°F [-6.7°C]	Total BTUH [kW]	72.9 [21.4]	72.2 [21.1]	71.0 [20.8]	77.9 [22.8]	77.1 [22.6]	75.8 [22.2]	83.0 [24.3]	82.1 [24.1]	80.7 [23.7]
		Power	6.0	6.1	6.3	6.6	6.7	6.9	7.3	7.4	7.6
	25°F [-3.9°C]	Total BTUH [kW]	76.3 [22.3]	75.5 [22.1]	74.2 [21.7]	81.3 [23.8]	80.4 [23.6]	79.1 [23.2]	86.3 [25.3]	85.4 [25.0]	84.0 [24.6]
		Power	6.1	6.2	6.4	6.6	6.8	7.0	7.4	7.5	7.7
	30°F [-1.1°C]	Total BTUH [kW]	79.6 [23.3]	78.8 [23.1]	77.4 [22.7]	84.6 [24.8]	83.7 [24.5]	82.3 [24.1]	89.6 [26.3]	88.7 [26.0]	87.2 [25.6]
		Power	6.1	6.2	6.4	6.7	6.8	7.0	7.4	7.6	7.8
	35°F [1.7°C]	Total BTUH [kW]	82.9 [24.3]	82.0 [24.0]	80.7 [23.6]	87.9 [25.8]	87.0 [25.5]	85.6 [25.1]	93.0 [27.2]	92.0 [27.0]	90.4 [26.5]
		Power	6.2	6.3	6.5	6.8	6.9	7.1	7.5	7.6	7.9
	40°F [4.4°C]	Total BTUH [kW]	86.2 [25.3]	85.3 [25.0]	83.9 [24.6]	91.3 [26.7]	90.3 [26.5]	88.8 [26.0]	96.3 [28.2]	95.3 [27.9]	93.7 [27.5]
		Power	6.3	6.4	6.6	6.9	7.0	7.2	7.6	7.7	7.9
	45°F [7.2°C]	Total BTUH [kW]	89.6 [26.3]	88.6 [26.0]	87.2 [25.5]	94.6 [27.7]	93.6 [27.4]	92.0 [27.0]	99.6 [29.2]	98.6 [28.9]	96.9 [28.4]
		Power	6.3	6.5	6.7	6.9	7.1	7.3	7.6	7.8	8.0
	50°F [10.0°C]	Total BTUH [kW]	92.9 [27.2]	91.9 [26.9]	90.4 [26.5]	97.9 [28.7]	96.9 [28.4]	95.3 [27.9]	103.0 [30.2]	101.9 [29.9]	100.2 [29.4]
		Power	6.4	6.5	6.7	7.0	7.1	7.3	7.7	7.9	8.1

IDB—Indoor air dry bulb

[ ] Designates Metric Conversions

COOLING PERFORMANCE DATA—RHPDZS120A

ENTERING INDOOR AIR @ 80°F [26.7°C] dbE ①																	
wbE			71°F [21.7°C]			67°F [19.4°C]			63°F [17.2°C]			61°F [16.1°C]			59°F [15.0°C]		
CFM [L/s]			4560 [2152]	4060 [1916]	3040 [1435]	4560 [2152]	4060 [1916]	3040 [1435]	4560 [2152]	4060 [1916]	3040 [1435]	4560 [2152]	4060 [1916]	3040 [1435]	4560 [2152]	4060 [1916]	3040 [1435]
DR ①			0.21	0.19	0.13	0.21	0.19	0.13	0.21	0.19	0.13	0.21	0.19	0.13	0.21	0.19	0.13
OUTDOOR DRY BULB TEMPERATURE °F [°C]	75 [23.9]	Total BTUH [kW]	143.1 [41.9]	140.0 [41.0]	133.6 [39.1]	134.9 [39.5]	131.9 [38.7]	125.9 [36.9]	128.2 [37.6]	125.4 [36.7]	119.7 [35.1]	125.7 [36.8]	122.9 [36.0]	117.3 [34.4]	123.9 [36.3]	121.2 [35.5]	115.6 [33.9]
		Sens BTUH [kW]	90.5 [26.5]	85.5 [25.1]	75.5 [22.1]	98.5 [28.9]	93.2 [27.3]	82.2 [24.1]	106.9 [31.3]	101.1 [29.6]	89.2 [26.2]	111.2 [32.6]	105.1 [30.8]	92.8 [27.2]	115.5 [33.9]	109.2 [32.0]	96.4 [28.3]
		Power	7.3	7.2	7.1	7.2	7.2	7.0	7.2	7.1	6.9	7.1	7.1	6.9	7.1	7.0	6.9
	80 [26.7]	Total BTUH [kW]	139.9 [41.0]	136.9 [40.1]	130.6 [38.3]	131.7 [38.6]	128.8 [37.8]	122.9 [36.0]	125.0 [36.6]	122.3 [35.8]	116.7 [34.2]	122.5 [35.9]	119.8 [35.1]	114.3 [33.5]	120.7 [35.4]	118.1 [34.6]	112.7 [33.0]
		Sens BTUH [kW]	89.4 [26.2]	84.6 [24.8]	74.7 [21.9]	97.5 [28.6]	92.2 [27.0]	81.4 [23.9]	105.9 [31.0]	100.1 [29.3]	88.4 [25.9]	110.2 [32.3]	104.2 [30.5]	92.0 [27]	114.5 [33.6]	108.3 [31.7]	95.6 [28.0]
		Power	7.7	7.6	7.4	7.6	7.5	7.4	7.5	7.5	7.3	7.5	7.4	7.3	7.5	7.4	7.2
	85 [29.4]	Total BTUH [kW]	136.6 [40.0]	133.6 [39.2]	127.5 [37.4]	128.4 [37.6]	125.6 [36.8]	119.8 [35.1]	121.7 [35.7]	119 [34.9]	113.6 [33.3]	119.1 [34.9]	116.5 [34.1]	111.2 [32.6]	117.4 [34.4]	114.8 [33.6]	109.5 [32.1]
		Sens BTUH [kW]	88.1 [25.8]	83.3 [24.4]	73.5 [21.5]	96.1 [28.2]	90.9 [26.6]	80.3 [23.5]	104.5 [30.6]	98.8 [29.0]	87.3 [25.6]	108.8 [31.9]	102.9 [30.2]	90.8 [26.6]	113.1 [33.2]	107.0 [31.4]	94.4 [27.7]
		Power	8.1	8.0	7.8	8.0	7.9	7.7	7.9	7.9	7.7	7.9	7.8	7.6	7.9	7.8	7.6
	90 [32.2]	Total BTUH [kW]	133.1 [39.0]	130.2 [38.2]	124.3 [36.4]	124.9 [36.6]	122.1 [35.8]	116.6 [34.2]	118.2 [34.6]	115.6 [33.9]	110.3 [32.3]	115.7 [33.9]	113.1 [33.1]	108.0 [31.6]	113.9 [33.4]	111.4 [32.6]	106.3 [31.1]
		Sens BTUH [kW]	86.4 [25.3]	81.7 [23.9]	72.1 [21.1]	94.4 [27.7]	89.3 [26.2]	78.8 [23.1]	102.8 [30.1]	97.2 [28.5]	85.8 [25.2]	107.1 [31.4]	101.3 [29.7]	89.4 [26.2]	111.4 [32.7]	105.4 [30.9]	93.0 [27.3]
		Power	8.5	8.4	8.2	8.4	8.3	8.2	8.4	8.3	8.1	8.3	8.2	8.1	8.3	8.2	8.0
	95 [35]	Total BTUH [kW]	129.5 [37.9]	126.6 [37.1]	120.8 [35.4]	121.2 [35.5]	118.6 [34.7]	113.2 [33.2]	114.5 [33.6]	112.0 [32.8]	106.9 [31.3]	112.0 [32.8]	109.6 [32.1]	104.5 [30.6]	110.2 [32.3]	107.8 [31.6]	102.9 [30.1]
		Sens BTUH [kW]	84.3 [24.7]	79.8 [23.4]	70.4 [20.6]	92.4 [27.1]	87.4 [25.6]	77.1 [22.6]	100.8 [29.5]	95.3 [27.9]	84.1 [24.7]	105.1 [30.8]	99.4 [29.1]	87.7 [25.7]	109.4 [32.1]	103.5 [30.3]	91.3 [26.8]
		Power	8.9	8.9	8.7	8.9	8.8	8.6	8.8	8.7	8.5	8.8	8.7	8.5	8.8	8.7	8.5
	100 [37.8]	Total BTUH [kW]	125.7 [36.8]	122.9 [36.0]	117.3 [34.4]	117.4 [34.4]	114.9 [33.7]	109.6 [32.1]	110.7 [32.4]	108.3 [31.7]	103.4 [30.3]	108.2 [31.7]	105.8 [31.0]	101.0 [29.6]	106.4 [31.2]	104.1 [30.5]	99.3 [29.1]
		Sens BTUH [kW]	82.0 [24.0]	77.5 [22.7]	68.4 [20.0]	90.0 [26.4]	85.1 [24.9]	75.2 [22.0]	98.4 [28.8]	93.1 [27.3]	82.1 [24.1]	102.7 [30.1]	97.1 [28.5]	85.7 [25.1]	106.4 [31.2]	101.2 [29.7]	89.3 [26.2]
		Power	9.4	9.3	9.1	9.4	9.3	9.1	9.3	9.2	9.0	9.3	9.2	9.0	9.2	9.1	8.9
	105 [40.6]	Total BTUH [kW]	121.7 [35.7]	119 [34.9]	113.6 [33.3]	113.5 [33.3]	111.0 [32.5]	105.9 [31.0]	106.8 [31.3]	104.4 [30.6]	99.7 [29.2]	104.2 [30.5]	102.0 [29.9]	97.3 [28.5]	102.5 [30.0]	100.2 [29.4]	95.6 [28.0]
		Sens BTUH [kW]	79.2 [23.2]	74.9 [22.0]	66.2 [19.4]	87.3 [25.6]	82.6 [24.2]	72.9 [21.4]	95.7 [28.0]	90.5 [26.5]	79.9 [23.4]	100.0 [29.3]	94.5 [27.7]	83.5 [24.5]	102.5 [30.0]	98.6 [28.9]	87.1 [25.5]
		Power	9.9	9.8	9.6	9.9	9.8	9.6	9.8	9.7	9.5	9.8	9.7	9.5	9.7	9.6	9.4
	110 [43.3]	Total BTUH [kW]	117.6 [34.5]	115.0 [33.7]	109.8 [32.2]	109.4 [32.0]	107.0 [31.3]	102.1 [29.9]	102.7 [30.1]	100.4 [29.4]	95.8 [28.1]	100.1 [29.3]	97.9 [28.7]	93.5 [27.4]	98.4 [28.8]	96.2 [28.2]	91.8 [26.9]
		Sens BTUH [kW]	76.2 [22.3]	72.1 [21.1]	63.6 [18.6]	84.3 [24.7]	79.7 [23.3]	70.3 [20.6]	92.6 [27.1]	87.6 [25.7]	77.3 [22.7]	96.9 [28.4]	91.7 [26.9]	80.9 [23.7]	98.4 [28.8]	95.8 [28.1]	84.5 [24.8]
		Power	10.5	10.4	10.1	10.4	10.3	10.1	10.4	10.2	10.0	10.3	10.2	10.0	10.3	10.2	10.0
	115 [46.1]	Total BTUH [kW]	113.3 [33.2]	110.9 [32.5]	105.8 [31.0]	105.1 [30.8]	102.8 [30.1]	98.1 [28.7]	98.4 [28.8]	96.2 [28.2]	91.8 [26.9]	95.9 [28.1]	93.8 [27.5]	89.5 [26.2]	94.1 [27.6]	92.0 [27.0]	87.8 [25.7]
		Sens BTUH [kW]	72.8 [21.3]	68.8 [20.2]	60.8 [17.8]	80.9 [23.7]	76.5 [22.4]	67.5 [19.8]	89.2 [26.2]	84.4 [24.7]	74.5 [21.8]	93.5 [27.4]	88.4 [25.9]	78.1 [22.9]	94.1 [27.6]	92.0 [27.0]	81.7 [23.9]
		Power	11.1	10.9	10.7	11.0	10.9	10.6	10.9	10.8	10.6	10.9	10.8	10.5	10.9	10.7	10.5
	120 [48.9]	Total BTUH [kW]	108.9 [31.9]	106.5 [31.2]	101.7 [29.8]	100.7 [29.5]	98.5 [28.9]	94.0 [27.5]	94.0 [27.5]	91.9 [26.9]	87.7 [25.7]	91.5 [26.8]	89.5 [26.2]	85.4 [25.0]	89.7 [26.3]	87.7 [25.7]	83.7 [24.5]
		Sens BTUH [kW]	69.1 [20.2]	65.3 [19.1]	57.7 [16.9]	77.1 [22.6]	72.9 [21.4]	64.4 [18.9]	85.5 [25.1]	80.9 [23.7]	71.4 [20.9]	89.8 [26.3]	84.9 [24.9]	75.0 [22.0]	89.7 [26.3]	87.7 [25.7]	78.6 [23.0]
		Power	11.7	11.5	11.3	11.6	11.5	11.2	11.5	11.4	11.1	11.5	11.4	11.1	11.5	11.3	11.1
	125 [51.7]	Total BTUH [kW]	104.3 [30.6]	102.1 [29.9]	97.4 [28.5]	96.1 [28.2]	94.0 [27.5]	89.7 [26.3]	89.4 [26.2]	87.4 [25.6]	83.5 [24.5]	86.9 [25.5]	85.0 [24.9]	81.1 [23.8]	85.1 [24.9]	83.2 [24.4]	79.4 [23.3]
		Sens BTUH [kW]	65.0 [19.0]	61.5 [18.0]	54.3 [15.9]	73.1 [21.4]	69.1 [20.2]	61.0 [17.9]	81.4 [23.9]	77.0 [22.6]	68.0 [19.9]	85.7 [25.1]	81.1 [23.8]	71.6 [21.0]	85.1 [24.9]	83.2 [24.4]	75.2 [22.0]
		Power	12.3	12.2	11.9	12.2	12.1	11.8	12.2	12.0	11.8	12.1	12.0	11.7	12.1	12.0	11.7

DR —Depression ratio
dbE —Entering air dry bulb
wbE—Entering air wet bulb.

Total —Total capacity x 1000 BTUH
Sens —Sensible capacity x 1000 BTUH
Power —KW input

NOTES: ① When the entering air dry bulb is other than 80°F [27°C], adjust the sensible capacity from the table by adding [1.10 x CFM x (1 – DR) x (dbE – 80)].

[ ] Designates Metric Conversions

HEATING PERFORMANCE DATA—RHPDZS120A

IDB			60°F [15.5°C]			70°F [21.1°C]			80°F [26.7°C]		
CFM [L/s]			4560 [2152]	4060 [1916]	3040 [1435]	4560 [2152]	4060 [1916]	3040 [1435]	4560 [2152]	4060 [1916]	3040 [1435]
OUTDOOR DRY BULB TEMPERATURE °F [°C]	0°F [-17.8°C]	Total BTUH [kW]	47.5 [13.9]	47.1 [13.8]	46.2 [13.5]	43.9 [12.9]	43.5 [12.7]	42.7 [12.5]	40.2 [11.8]	39.9 [11.7]	39.1 [11.5]
		Power	5.8	5.9	6.1	6.5	6.6	6.8	7.3	7.4	7.7
	5°F [-15.0°C]	Total BTUH [kW]	54.6 [16.0]	54.1 [15.9]	53.1 [15.6]	50.9 [14.9]	50.5 [14.8]	49.6 [14.5]	47.3 [13.9]	46.9 [13.7]	46.0 [13.5]
		Power	5.9	6.0	6.2	6.6	6.7	6.9	7.4	7.5	7.8
	10°F [-12.2°C]	Total BTUH [kW]	61.7 [18.1]	61.1 [17.9]	60.0 [17.6]	58.0 [17.0]	57.5 [16.9]	56.5 [16.5]	54.4 [15.9]	53.9 [15.8]	52.9 [15.5]
		Power	6.0	6.1	6.3	6.7	6.8	7.1	7.5	7.6	7.9
	15°F [-9.4°C]	Total BTUH [kW]	68.7 [20.1]	68.1 [20.0]	66.9 [19.6]	65.1 [19.1]	64.5 [18.9]	63.4 [18.6]	61.4 [18.0]	60.9 [17.8]	59.8 [17.5]
		Power	6.1	6.2	6.4	6.9	7.0	7.2	7.6	7.8	8.0
	20°F [-6.7°C]	Total BTUH [kW]	75.8 [22.2]	75.1 [22.0]	73.8 [21.6]	72.2 [21.1]	71.5 [21.0]	70.3 [20.6]	68.5 [20.1]	67.9 [19.9]	66.7 [19.5]
		Power	6.3	6.4	6.6	7.0	7.1	7.3	7.8	7.9	8.1
	25°F [-3.9°C]	Total BTUH [kW]	82.9 [24.3]	82.2 [24.1]	80.7 [23.6]	79.2 [23.2]	78.6 [23.0]	77.1 [22.6]	75.6 [22.2]	74.9 [22.0]	73.6 [21.6]
		Power	6.4	6.5	6.7	7.1	7.2	7.4	7.9	8.0	8.2
	30°F [-1.1°C]	Total BTUH [kW]	90.0 [26.4]	89.2 [26.1]	87.6 [25.7]	86.3 [25.3]	85.6 [25.1]	84.0 [24.6]	82.7 [24.2]	82.0 [24.0]	80.5 [23.6]
		Power	6.5	6.6	6.8	7.2	7.3	7.5	8.0	8.1	8.4
	35°F [1.7°C]	Total BTUH [kW]	97.0 [28.4]	96.2 [28.2]	94.5 [27.7]	93.4 [27.4]	92.6 [27.1]	90.9 [26.6]	89.8 [26.3]	89.0 [26.1]	87.4 [25.6]
		Power	6.6	6.7	6.9	7.3	7.4	7.7	8.1	8.2	8.5
	40°F [4.4°C]	Total BTUH [kW]	104.1 [30.5]	103.2 [30.2]	101.4 [29.7]	100.5 [29.4]	99.6 [29.2]	97.8 [28.7]	96.8 [28.4]	96.0 [28.1]	94.3 [27.6]
		Power	6.7	6.8	7.0	7.4	7.5	7.8	8.2	8.3	8.6
	45°F [7.2°C]	Total BTUH [kW]	111.2 [32.6]	110.2 [32.3]	108.2 [31.7]	107.6 [31.5]	106.6 [31.2]	104.7 [30.7]	103.9 [30.4]	103.0 [30.2]	101.2 [29.6]
		Power	6.8	6.9	7.1	7.5	7.6	7.9	8.3	8.4	8.7
	50°F [10.0°C]	Total BTUH [kW]	118.3 [34.7]	117.2 [34.4]	115.1 [33.7]	114.6 [33.6]	113.6 [33.3]	111.6 [32.7]	111.0 [32.5]	110.0 [32.2]	108.0 [31.7]
		Power	6.9	7.0	7.3	7.6	7.8	8.0	8.4	8.6	8.8

IDB—Indoor air dry bulb

[ ] Designates Metric Conversions

COOLING PERFORMANCE DATA—RHPDZT090A

		ENTERING INDOOR AIR @ 80°F [26.7°C] dbE ①														
	wbE	71°F [21.7°C]			67°F [19.4°C]			63°F [17.2°C]			61°F [16.1°C]			59°F [15.0°C]		
	CFM [L/s]	3600 [1699]	3030 [1430]	2400 [1133]	3600 [1699]	3030 [1430]	2400 [1133]	3600 [1699]	3030 [1430]	2400 [1133]	3600 [1699]	3030 [1430]	2400 [1133]	3600 [1699]	3030 [1430]	2400 [1133]
	DR ①	0.21	0.18	0.13	0.21	0.18	0.13	0.21	0.18	0.13	0.21	0.18	0.13	0.21	0.18	0.13
OUTDOOR DRY BULB TEMPERATURE °F [°C]	75 [23.9] Total BTUH [kW]	108.7 [31.8]	105.1 [30.8]	101.1 [29.6]	102.4 [30.0]	99.1 [29.0]	95.3 [27.9]	97.5 [28.6]	94.3 [27.6]	90.7 [26.6]	95.7 [28.0]	92.5 [27.1]	89.0 [26.1]	94.5 [27.7]	91.4 [26.8]	87.9 [25.8]
	Sens BTUH [kW]	62.9 [18.4]	57.8 [16.9]	52.2 [15.3]	75.7 [22.2]	69.6 [20.4]	62.8 [18.4]	85.9 [25.2]	78.9 [23.1]	71.3 [20.9]	89.6 [26.2]	82.3 [24.1]	74.4 [21.8]	92.0 [27.0]	84.6 [24.8]	76.4 [22.4]
	Power	5.7	5.6	5.5	5.6	5.5	5.4	5.6	5.5	5.4	5.6	5.5	5.4	5.5	5.5	5.4
	80 [26.7] Total BTUH [kW]	106.3 [31.1]	102.8 [30.1]	98.9 [29.0]	100.1 [29.3]	96.8 [28.4]	93.1 [27.3]	95.1 [27.9]	92.0 [27.0]	88.5 [25.9]	93.3 [27.3]	90.2 [26.4]	86.8 [25.4]	92.1 [27.0]	89.1 [26.1]	85.7 [25.1]
	Sens BTUH [kW]	62.2 [18.2]	57.2 [16.8]	51.6 [15.1]	75.0 [22.0]	68.9 [20.2]	62.2 [18.2]	85.2 [25.0]	78.3 [22.9]	70.7 [20.7]	88.9 [26.0]	81.7 [23.9]	73.8 [21.6]	91.3 [26.8]	83.9 [24.6]	75.8 [22.2]
	Power	5.9	5.8	5.7	5.9	5.8	5.7	5.8	5.8	5.6	5.8	5.7	5.6	5.8	5.7	5.6
	85 [29.4] Total BTUH [kW]	103.7 [30.4]	100.3 [29.4]	96.5 [28.3]	97.5 [28.6]	94.3 [27.6]	90.7 [26.6]	92.6 [27.1]	89.5 [26.2]	86.1 [25.2]	90.8 [26.6]	87.8 [25.7]	84.5 [24.8]	89.6 [26.3]	86.6 [25.4]	83.4 [24.4]
	Sens BTUH [kW]	61.3 [17.9]	56.3 [16.5]	50.8 [14.9]	74.0 [21.7]	68.1 [19.9]	61.5 [18.0]	84.2 [24.7]	77.4 [22.7]	69.9 [20.5]	87.9 [25.8]	80.8 [23.7]	73.0 [21.4]	89.6 [26.3]	83.1 [24.3]	75.0 [22.0]
	Power	6.2	6.1	6.0	6.2	6.1	6.0	6.1	6.0	5.9	6.1	6.0	5.9	6.1	6.0	5.9
	90 [32.2] Total BTUH [kW]	101.1 [29.6]	97.7 [28.6]	94.0 [27.6]	94.8 [27.8]	91.7 [26.9]	88.2 [25.9]	89.9 [26.3]	86.9 [25.5]	83.6 [24.5]	88.1 [25.8]	85.2 [25.0]	82.0 [24.0]	86.9 [25.5]	84.0 [24.6]	80.9 [23.7]
	Sens BTUH [kW]	60.1 [17.6]	55.2 [16.2]	49.9 [14.6]	72.9 [21.4]	67.0 [19.6]	60.5 [17.7]	83.1 [24.3]	76.4 [22.4]	69.0 [20.2]	86.8 [25.4]	79.8 [23.4]	72.0 [21.1]	86.9 [25.5]	82.0 [24.0]	74.1 [21.7]
	Power	6.5	6.4	6.3	6.5	6.4	6.3	6.4	6.3	6.2	6.4	6.3	6.2	6.4	6.3	6.2
	95 [35] Total BTUH [kW]	98.2 [28.8]	95.0 [27.8]	91.4 [26.8]	92.0 [27.0]	88.9 [26.1]	85.6 [25.1]	87.0 [25.5]	84.2 [24.7]	81.0 [23.7]	85.2 [25.0]	82.4 [24.2]	79.3 [23.2]	84.1 [24.6]	81.3 [23.8]	78.2 [22.9]
	Sens BTUH [kW]	58.7 [17.2]	54.0 [15.8]	48.8 [14.3]	71.5 [21.0]	65.7 [19.3]	59.4 [17.4]	81.7 [23.9]	75.1 [22.0]	67.8 [19.9]	85.2 [25.0]	78.5 [23.0]	70.9 [20.8]	84.1 [24.6]	80.8 [23.7]	72.9 [21.4]
	Power	6.8	6.7	6.6	6.8	6.7	6.6	6.8	6.6	6.5	6.7	6.6	6.5	6.7	6.6	6.5
	100 [37.8] Total BTUH [kW]	95.2 [27.9]	92.0 [27.0]	88.6 [26.0]	89.0 [26.1]	86.0 [25.2]	82.8 [24.3]	84.0 [24.6]	81.3 [23.8]	78.2 [22.9]	82.2 [24.1]	79.5 [23.3]	76.5 [22.4]	81.1 [23.8]	78.4 [23.0]	75.4 [22.1]
	Sens BTUH [kW]	57.1 [16.7]	52.5 [15.4]	47.4 [13.9]	69.9 [20.5]	64.3 [18.8]	58.0 [17.0]	80.1 [23.5]	73.7 [21.6]	66.5 [19.5]	82.2 [24.1]	77.1 [22.6]	69.6 [20.4]	81.1 [23.8]	78.4 [23.0]	71.6 [21.0]
	Power	7.2	7.1	6.9	7.1	7.0	6.9	7.1	7.0	6.9	7.1	7.0	6.8	7.1	6.9	6.8
	105 [40.6] Total BTUH [kW]	92.0 [27.0]	89.0 [26.1]	85.6 [25.1]	85.8 [25.1]	83.0 [24.3]	79.8 [23.4]	80.9 [23.7]	78.2 [22.9]	75.2 [22.0]	79.1 [23.2]	76.5 [22.4]	73.6 [21.6]	77.9 [22.8]	75.3 [22.1]	72.5 [21.2]
	Sens BTUH [kW]	55.3 [16.2]	50.9 [14.9]	45.9 [13.5]	68.1 [20.0]	62.6 [18.4]	56.6 [16.6]	78.3 [23.0]	72.0 [21.1]	65.0 [19.1]	79.1 [23.2]	75.4 [22.1]	68.1 [19.9]	77.9 [22.8]	75.3 [22.1]	70.1 [20.5]
	Power	7.6	7.4	7.3	7.5	7.4	7.3	7.5	7.4	7.2	7.5	7.3	7.2	7.4	7.3	7.2
	110 [43.3] Total BTUH [kW]	88.7 [26.0]	85.8 [25.1]	82.5 [24.2]	82.5 [24.2]	79.8 [23.4]	76.7 [22.5]	77.5 [22.7]	75.0 [22.0]	72.1 [21.1]	75.8 [22.2]	73.2 [21.5]	70.5 [20.7]	74.6 [21.9]	72.1 [21.1]	69.4 [20.3]
	Sens BTUH [kW]	53.3 [15.6]	49.0 [14.4]	44.3 [13.0]	66.1 [19.4]	60.8 [17.8]	54.9 [16.1]	76.3 [22.4]	70.1 [20.6]	63.3 [18.6]	75.8 [22.2]	73.2 [21.5]	66.4 [19.5]	74.6 [21.9]	72.1 [21.1]	68.4 [20.1]
	Power	8.0	7.8	7.7	7.9	7.8	7.6	7.9	7.7	7.6	7.8	7.7	7.6	7.8	7.7	7.6
	115 [46.1] Total BTUH [kW]	85.2 [25.0]	82.4 [24.1]	79.3 [23.2]	79.0 [23.2]	76.4 [22.4]	73.5 [21.5]	74.1 [21.7]	71.6 [21.0]	68.9 [20.2]	72.3 [21.2]	69.9 [20.5]	67.2 [19.7]	71.1 [20.8]	68.7 [20.1]	66.1 [19.4]
	Sens BTUH [kW]	51.1 [15.0]	47.0 [13.8]	42.4 [12.4]	63.9 [18.7]	58.7 [17.2]	53.0 [15.5]	74.1 [21.7]	68.1 [19.9]	61.5 [18.0]	72.3 [21.2]	69.9 [20.5]	64.5 [18.9]	71.1 [20.8]	68.7 [20.1]	66.1 [19.4]
	Power	8.4	8.2	8.1	8.3	8.2	8.0	8.3	8.1	8.0	8.3	8.1	8.0	8.2	8.1	8.0
	120 [48.9] Total BTUH [kW]	81.6 [23.9]	78.9 [23.1]	75.9 [22.2]	75.4 [22.1]	72.9 [21.4]	70.1 [20.5]	70.4 [20.6]	68.1 [20.0]	65.5 [19.2]	68.6 [20.1]	66.4 [19.4]	63.9 [18.7]	67.4 [19.8]	65.2 [19.1]	62.8 [18.4]
	Sens BTUH [kW]	48.6 [14.2]	44.7 [13.1]	40.4 [11.8]	61.4 [18.0]	56.5 [16.5]	51.0 [14.9]	70.4 [20.6]	65.8 [19.3]	59.4 [17.4]	68.6 [20.1]	66.4 [19.4]	62.5 [18.3]	67.4 [19.8]	65.2 [19.1]	62.8 [18.4]
	Power	8.8	8.7	8.5	8.8	8.6	8.5	8.7	8.6	8.4	8.7	8.6	8.4	8.7	8.5	8.4
	125 [51.7] Total BTUH [kW]	77.8 [22.8]	75.2 [22.0]	72.4 [21.2]	71.6 [21.0]	69.2 [20.3]	66.6 [19.5]	66.6 [19.5]	64.4 [18.9]	62.0 [18.2]	64.8 [19.0]	62.7 [18.4]	60.3 [17.7]	63.7 [18.7]	61.5 [18.0]	59.2 [17.4]
	Sens BTUH [kW]	45.9 [13.5]	42.2 [12.4]	38.1 [11.2]	58.7 [17.2]	54.0 [15.8]	48.8 [14.3]	66.6 [19.5]	63.4 [18.6]	57.2 [16.8]	64.8 [19.0]	62.7 [18.4]	60.3 [17.7]	63.7 [18.7]	61.5 [18.0]	59.2 [17.4]
	Power	9.3	9.1	8.9	9.2	9.1	8.9	9.2	9.0	8.9	9.2	9.0	8.8	9.1	9.0	8.8

DR —Depression ratio
dbE —Entering air dry bulb
wbE—Entering air wet bulb.

Total —Total capacity x 1000 BTUH
Sens —Sensible capacity x 1000 BTUH
Power —KW input

NOTES: ① When the entering air dry bulb is other than 80°F [27°C], adjust the sensible capacity from the table by adding [1.10 x CFM x (1 – DR) x (dbE – 80)].

[ ] Designates Metric Conversions

HEATING PERFORMANCE DATA—RHPDZT090A

IDB			60°F [15.5°C]			70°F [21.1°C]			80°F [26.7°C]		
CFM [L/s]			3600 [1699]	3030 [1430]	2400 [1133]	3600 [1699]	3030 [1430]	2400 [1133]	3600 [1699]	3030 [1430]	2400 [1133]
OUTDOOR DRY BULB TEMPERATURE °F [°C]	0°F [-17.8°C]	Total BTUH [kW]	29.9 [8.8]	29.5 [8.7]	29.1 [8.5]	27.8 [8.1]	27.4 [8.0]	27.0 [7.9]	25.6 [7.5]	25.3 [7.4]	24.9 [7.3]
		Power	4.8	5.0	5.1	5.4	5.5	5.7	6.1	6.2	6.4
	5°F [-15.0°C]	Total BTUH [kW]	35.9 [10.5]	35.5 [10.4]	34.9 [10.2]	33.8 [9.9]	33.3 [9.8]	32.8 [9.6]	31.6 [9.3]	31.2 [9.1]	30.7 [9.0]
		Power	4.9	5.0	5.1	5.4	5.6	5.7	6.1	6.3	6.4
	10°F [-12.2°C]	Total BTUH [kW]	41.9 [12.3]	41.4 [12.1]	40.8 [11.9]	39.8 [11.7]	39.2 [11.5]	38.7 [11.3]	37.6 [11.0]	37.1 [10.9]	36.6 [10.7]
		Power	4.9	5.1	5.2	5.5	5.6	5.8	6.2	6.3	6.5
	15°F [-9.4°C]	Total BTUH [kW]	47.9 [14.0]	47.3 [13.9]	46.6 [13.7]	45.8 [13.4]	45.2 [13.2]	44.5 [13.0]	43.6 [12.8]	43.0 [12.6]	42.4 [12.4]
		Power	5.0	5.1	5.2	5.5	5.7	5.8	6.2	6.4	6.5
	20°F [-6.7°C]	Total BTUH [kW]	53.9 [15.8]	53.2 [15.6]	52.4 [15.4]	51.8 [15.2]	51.1 [15.0]	50.3 [14.7]	49.6 [14.5]	49.0 [14.3]	48.2 [14.1]
		Power	5.0	5.2	5.3	5.6	5.7	5.9	6.3	6.4	6.6
	25°F [-3.9°C]	Total BTUH [kW]	59.9 [17.6]	59.1 [17.3]	58.3 [17.1]	57.8 [16.9]	57.0 [16.7]	56.2 [16.5]	55.6 [16.3]	54.9 [16.1]	54.1 [15.8]
		Power	5.1	5.2	5.3	5.6	5.8	5.9	6.3	6.5	6.6
	30°F [-1.1°C]	Total BTUH [kW]	65.9 [19.3]	65.1 [19.1]	64.1 [18.8]	63.8 [18.7]	62.9 [18.4]	62.0 [18.2]	61.6 [18.1]	60.8 [17.8]	59.9 [17.6]
		Power	5.1	5.3	5.4	5.7	5.8	6.0	6.4	6.5	6.7
	35°F [1.7°C]	Total BTUH [kW]	71.9 [21.1]	71.0 [20.8]	69.9 [20.5]	69.8 [20.4]	68.8 [20.2]	67.8 [19.9]	67.6 [19.8]	66.7 [19.6]	65.7 [19.3]
		Power	5.2	5.3	5.4	5.7	5.9	6.0	6.4	6.6	6.7
	40°F [4.4°C]	Total BTUH [kW]	77.9 [22.8]	76.9 [22.5]	75.8 [22.2]	75.8 [22.2]	74.8 [21.9]	73.7 [21.6]	73.6 [21.6]	72.6 [21.3]	71.6 [21.0]
		Power	5.2	5.4	5.5	5.8	5.9	6.1	6.5	6.6	6.8
	45°F [7.2°C]	Total BTUH [kW]	83.9 [24.6]	82.8 [24.3]	81.6 [23.9]	81.8 [24.0]	80.7 [23.6]	79.5 [23.3]	79.6 [23.3]	78.6 [23.0]	77.4 [22.7]
		Power	5.3	5.4	5.5	5.8	6.0	6.1	6.5	6.7	6.8
	50°F [10.0°C]	Total BTUH [kW]	89.9 [26.4]	88.7 [26.0]	87.4 [25.6]	87.8 [25.7]	86.6 [25.4]	85.3 [25.0]	85.6 [25.1]	84.5 [24.8]	83.2 [24.4]
		Power	5.3	5.5	5.6	5.9	6.0	6.2	6.6	6.7	6.9

IDB—Indoor air dry bulb

[ ] Designates Metric Conversions

COOLING PERFORMANCE DATA—RHPDZT102A

		ENTERING INDOOR AIR @ 80°F [26.7°C] dbE ①														
	wbE	71°F [21.7°C]			67°F [19.4°C]			63°F [17.2°C]			61°F [16.1°C]			59°F [15.0°C]		
	CFM [L/s]	3840 [1812]	3345 [1579]	2560 [1208]	3840 [1812]	3345 [1579]	2560 [1208]	3840 [1812]	3345 [1579]	2560 [1208]	3840 [1812]	3345 [1579]	2560 [1208]	3840 [1812]	3345 [1579]	2560 [1208]
	DR ①	0.19	0.17	0.12	0.19	0.17	0.12	0.19	0.17	0.12	0.19	0.17	0.12	0.19	0.17	0.12
OUTDOOR DRY BULB TEMPERATURE °F [°C]	75 [23.9] Total BTUH [kW]	121.8 [35.7]	118.6 [34.8]	113.6 [33.3]	116.1 [34.0]	113.0 [33.1]	108.2 [31.7]	110.0 [32.2]	107.1 [31.4]	102.5 [30.0]	106.8 [31.3]	104.0 [30.5]	99.6 [29.2]	103.7 [30.4]	100.9 [29.6]	96.6 [28.3]
	Sens BTUH [kW]	75.6 [22.2]	70.7 [20.7]	63.0 [18.5]	85.1 [24.9]	79.6 [23.3]	70.9 [20.8]	92.9 [27.2]	86.9 [25.5]	77.4 [22.7]	95.9 [28.1]	89.7 [26.3]	79.9 [23.4]	98.1 [28.8]	91.8 [26.9]	81.7 [23.9]
	Power	6.4	6.3	6.1	6.3	6.2	6.1	6.3	6.2	6.1	6.2	6.2	6.0	6.2	6.1	6.0
	80 [26.7] Total BTUH [kW]	118.9 [34.8]	115.8 [33.9]	110.8 [32.5]	113.1 [33.1]	110.2 [32.3]	105.5 [30.9]	107.0 [31.4]	104.2 [30.5]	99.8 [29.2]	103.9 [30.5]	101.2 [29.7]	96.9 [28.4]	100.7 [29.5]	98.1 [28.7]	93.9 [27.5]
	Sens BTUH [kW]	74.4 [21.8]	69.6 [20.4]	62.0 [18.2]	83.9 [24.6]	78.5 [23.0]	69.9 [20.5]	91.7 [26.9]	85.8 [25.1]	76.4 [22.4]	94.7 [27.8]	88.6 [26.0]	78.9 [23.1]	96.9 [28.4]	90.7 [26.6]	80.7 [23.7]
	Power	6.7	6.6	6.4	6.6	6.5	6.4	6.6	6.5	6.3	6.5	6.4	6.3	6.5	6.4	6.3
	85 [29.4] Total BTUH [kW]	115.9 [34.0]	112.8 [33.1]	108.0 [31.7]	110.1 [32.3]	107.2 [31.4]	102.6 [30.1]	104.0 [30.5]	101.3 [29.7]	97.0 [28.4]	100.9 [29.6]	98.2 [28.8]	94.1 [27.6]	97.7 [28.6]	95.1 [27.9]	91.1 [26.7]
	Sens BTUH [kW]	73.0 [21.4]	68.3 [20.0]	60.8 [17.8]	82.5 [24.2]	77.2 [22.6]	68.7 [20.1]	90.3 [26.5]	84.5 [24.8]	75.2 [22.1]	93.3 [27.4]	87.3 [25.6]	77.8 [22.8]	95.5 [28.0]	89.4 [26.2]	79.6 [23.3]
	Power	7.0	6.9	6.7	6.9	6.8	6.7	6.9	6.8	6.7	6.9	6.8	6.6	6.8	6.7	6.6
	90 [32.2] Total BTUH [kW]	112.8 [33.0]	109.8 [32.2]	105.1 [30.8]	107.0 [31.4]	104.2 [30.5]	99.7 [29.2]	100.9 [29.6]	98.3 [28.8]	94.1 [27.6]	97.8 [28.7]	95.2 [27.9]	91.2 [26.7]	94.6 [27.7]	92.1 [27.0]	88.2 [25.8]
	Sens BTUH [kW]	71.4 [20.9]	66.8 [19.6]	59.5 [17.4]	80.9 [23.7]	75.7 [22.2]	67.4 [19.8]	88.8 [26.0]	83.0 [24.3]	73.9 [21.7]	91.8 [26.9]	85.8 [25.2]	76.4 [22.4]	94.0 [27.5]	87.9 [25.8]	78.3 [22.9]
	Power	7.3	7.2	7.1	7.3	7.2	7.0	7.2	7.1	7.0	7.2	7.1	7.0	7.2	7.1	6.9
	95 [35] Total BTUH [kW]	109.6 [32.1]	106.7 [31.3]	102.1 [29.9]	103.8 [30.4]	101.1 [29.6]	96.8 [28.4]	97.7 [28.6]	95.2 [27.9]	91.1 [26.7]	94.6 [27.7]	92.1 [27.0]	88.2 [25.8]	91.4 [26.8]	89.0 [26.1]	85.2 [25.0]
	Sens BTUH [kW]	69.7 [20.4]	65.2 [19.1]	58.0 [17.0]	79.2 [23.2]	74.1 [21.7]	66.0 [19.3]	87.0 [25.5]	81.4 [23.9]	72.5 [21.2]	90.0 [26.4]	84.2 [24.7]	70.5 [22.0]	91.4 [26.8]	86.3 [25.3]	76.8 [22.5]
	Power	7.7	7.6	7.5	7.7	7.6	7.4	7.6	7.5	7.4	7.6	7.5	7.3	7.6	7.5	7.3
	100 [37.8] Total BTUH [kW]	106.3 [31.1]	103.5 [30.3]	99.1 [29.0]	100.5 [29.5]	97.9 [28.7]	93.7 [27.5]	94.4 [27.7]	92.0 [26.9]	88.0 [25.8]	91.3 [26.8]	88.9 [26.1]	85.1 [24.9]	88.1 [25.8]	85.8 [25.1]	82.1 [24.1]
	Sens BTUH [kW]	67.7 [19.9]	63.4 [18.6]	56.4 [16.5]	77.2 [22.6]	72.3 [21.2]	64.3 [18.9]	85.1 [24.9]	79.6 [23.3]	70.9 [20.8]	88.1 [25.8]	82.4 [24.1]	73.4 [21.5]	88.1 [25.8]	84.4 [24.7]	75.2 [22.0]
	Power	8.1	8.0	7.9	8.1	8.0	7.8	8.0	7.9	7.8	8.0	7.9	7.7	8.0	7.9	7.7
	105 [40.6] Total BTUH [kW]	102.9 [30.2]	100.2 [29.4]	95.9 [28.1]	97.1 [28.5]	94.6 [27.7]	90.5 [26.5]	91.1 [26.7]	88.7 [26.0]	84.9 [24.9]	87.9 [25.8]	85.6 [25.1]	82.0 [24.0]	84.7 [24.8]	82.5 [24.2]	79.0 [23.1]
	Sens BTUH [kW]	65.6 [19.2]	61.4 [18.0]	54.7 [16.0]	75.1 [22.0]	70.3 [20.6]	62.6 [18.3]	82.9 [24.3]	77.6 [22.7]	69.1 [20.2]	85.9 [25.2]	80.4 [23.6]	71.6 [21.0]	84.7 [24.8]	82.5 [24.2]	73.4 [21.5]
	Power	8.6	8.5	8.3	8.5	8.4	8.2	8.5	8.4	8.2	8.5	8.3	8.2	8.4	8.3	8.1
	110 [43.3] Total BTUH [kW]	99.4 [29.1]	96.8 [28.4]	92.7 [27.2]	93.7 [27.4]	91.2 [26.7]	87.3 [25.6]	87.6 [25.7]	85.3 [25.0]	81.7 [23.9]	84.5 [24.7]	82.2 [24.1]	78.7 [23.1]	81.3 [23.8]	79.1 [23.2]	75.8 [22.2]
	Sens BTUH [kW]	63.3 [18.6]	59.2 [17.4]	52.7 [15.5]	72.8 [21.3]	68.1 [20.0]	60.6 [17.8]	80.6 [23.6]	75.4 [22.1]	67.2 [19.7]	83.6 [24.5]	78.2 [22.9]	69.7 [20.4]	81.3 [23.8]	79.1 [23.2]	71.5 [20.9]
	Power	9.0	8.9	8.7	9.0	8.9	8.7	8.9	8.8	8.6	8.9	8.8	8.6	8.9	8.8	8.6
	115 [46.1] Total BTUH [kW]	95.9 [28.1]	93.4 [27.4]	89.4 [26.2]	90.1 [26.4]	87.8 [25.7]	84.0 [24.6]	84.0 [24.6]	81.8 [24.0]	78.3 [23.0]	80.9 [23.7]	78.8 [23.1]	75.4 [22.1]	77.7 [22.8]	75.7 [22.2]	72.4 [21.2]
	Sens BTUH [kW]	60.8 [17.8]	56.9 [16.7]	50.6 [14.8]	70.3 [20.6]	65.8 [19.3]	58.6 [17.2]	78.1 [22.9]	73.1 [21.4]	65.1 [19.1]	80.9 [23.7]	75.9 [22.2]	67.6 [19.8]	77.7 [22.8]	75.7 [22.2]	69.4 [20.3]
	Power	9.5	9.4	9.2	9.5	9.4	9.2	9.4	9.3	9.1	9.4	9.3	9.1	9.4	9.3	9.1
	120 [48.9] Total BTUH [kW]	92.3 [27.0]	89.8 [26.3]	86.0 [25.2]	86.5 [25.3]	84.2 [24.7]	80.6 [23.6]	80.4 [23.6]	78.3 [22.9]	75.0 [22.0]	77.3 [22.6]	75.2 [22.0]	72.0 [21.1]	74.1 [21.7]	72.1 [21.1]	69.1 [20.2]
	Sens BTUH [kW]	58.1 [17.0]	54.4 [15.9]	48.4 [14.2]	67.6 [19.8]	63.2 [18.5]	56.3 [16.5]	75.4 [22.1]	70.6 [20.7]	62.8 [18.4]	77.3 [22.6]	73.4 [21.5]	65.3 [19.1]	74.1 [21.7]	72.1 [21.1]	67.2 [19.7]
	Power	10.1	9.9	9.7	10.0	9.9	9.7	10.0	9.8	9.6	10.0	9.8	9.6	9.9	9.8	9.6
	125 [51.7] Total BTUH [kW]	88.5 [25.9]	86.2 [25.3]	82.5 [24.2]	82.7 [24.2]	80.6 [23.6]	77.1 [22.6]	76.7 [22.5]	74.7 [21.9]	71.5 [20.9]	73.5 [21.5]	71.6 [21.0]	68.6 [20.1]	70.3 [20.6]	68.5 [20.1]	65.6 [19.2]
	Sens BTUH [kW]	55.2 [16.2]	51.7 [15.1]	46.0 [13.5]	64.7 [19.0]	60.5 [17.7]	53.9 [15.8]	72.6 [21.3]	67.9 [19.9]	60.4 [17.7]	73.5 [21.5]	70.7 [20.7]	62.9 [18.4]	70.3 [20.6]	68.5 [20.1]	64.8 [19.0]
	Power	10.6	10.5	10.3	10.6	10.4	10.2	10.5	10.4	10.2	10.5	10.4	10.2	10.5	10.4	10.1

DR —Depression ratio
dbE —Entering air dry bulb
wbE—Entering air wet bulb.

Total —Total capacity x 1000 BTUH
Sens —Sensible capacity x 1000 BTUH
Power —KW input

NOTES: ① When the entering air dry bulb is other than 80°F [27°C], adjust the sensible capacity from the table by adding [1.10 x CFM x (1 – DR) x (dbE – 80)].

[ ] Designates Metric Conversions

HEATING PERFORMANCE DATA—RHPDZT102A

IDB			60°F [15.5°C]			70°F [21.1°C]			80°F [26.7°C]		
CFM [L/s]			3840 [1812]	3345 [1579]	2560 [1208]	3840 [1812]	3345 [1579]	2560 [1208]	3840 [1812]	3345 [1579]	2560 [1208]
OUTDOOR DRY BULB TEMPERATURE °F [°C]	0°F [-17.8°C]	Total BTUH [kW]	37.0 [10.8]	36.6 [10.7]	36.0 [10.5]	34.2 [10.0]	33.8 [9.9]	33.2 [9.7]	31.3 [9.2]	31.0 [9.1]	30.5 [8.9]
		Power	5.7	5.8	6.0	6.3	6.4	6.6	7.0	7.1	7.3
	5°F [-15.0°C]	Total BTUH [kW]	43.6 [12.8]	43.1 [12.6]	42.4 [12.4]	40.7 [11.9]	40.3 [11.8]	39.6 [11.6]	37.9 [11.1]	37.5 [11.0]	36.9 [10.8]
		Power	5.8	5.9	6.1	6.4	6.5	6.7	7.1	7.2	7.4
	10°F [-12.2°C]	Total BTUH [kW]	50.1 [14.7]	49.6 [14.5]	48.8 [14.3]	47.3 [13.9]	46.8 [13.7]	46.0 [13.5]	44.5 [13.0]	44.0 [12.9]	43.3 [12.7]
		Power	5.8	6.0	6.1	6.4	6.6	6.7	7.1	7.3	7.5
	15°F [-9.4°C]	Total BTUH [kW]	56.7 [16.6]	56.1 [16.4]	55.2 [16.2]	53.9 [15.8]	53.3 [15.6]	52.4 [15.4]	51.1 [15.0]	50.5 [14.8]	49.7 [14.6]
		Power	5.9	6.0	6.2	6.5	6.6	6.8	7.2	7.4	7.6
	20°F [-6.7°C]	Total BTUH [kW]	63.3 [18.5]	62.6 [18.4]	61.6 [18.0]	60.5 [17.7]	59.8 [17.5]	58.8 [17.2]	57.6 [16.9]	57.0 [16.7]	56.1 [16.4]
		Power	6.0	6.1	6.3	6.6	6.7	6.9	7.3	7.4	7.6
	25°F [-3.9°C]	Total BTUH [kW]	69.9 [20.5]	69.1 [20.3]	68.0 [19.9]	67.0 [19.6]	66.3 [19.4]	65.2 [19.1]	64.2 [18.8]	63.5 [18.6]	62.5 [18.3]
		Power	6.1	6.2	6.4	6.6	6.8	7.0	7.4	7.5	7.7
	30°F [-1.1°C]	Total BTUH [kW]	76.4 [22.4]	75.6 [22.2]	74.4 [21.8]	73.6 [21.6]	72.8 [21.3]	71.6 [21.0]	70.8 [20.7]	70.0 [20.5]	68.9 [20.2]
		Power	6.1	6.2	6.4	6.7	6.8	7.0	7.4	7.6	7.8
	35°F [1.7°C]	Total BTUH [kW]	83.0 [24.3]	82.1 [24.1]	80.7 [23.7]	80.2 [23.5]	79.3 [23.2]	78.0 [22.9]	77.3 [22.7]	76.5 [22.4]	75.2 [22.0]
		Power	6.2	6.3	6.5	6.8	6.9	7.1	7.5	7.6	7.9
	40°F [4.4°C]	Total BTUH [kW]	89.6 [26.2]	88.6 [26.0]	87.1 [25.5]	86.7 [25.4]	85.8 [25.2]	84.4 [24.7]	83.9 [24.6]	83.0 [24.3]	81.6 [23.9]
		Power	6.3	6.4	6.6	6.9	7.0	7.2	7.6	7.7	7.9
	45°F [7.2°C]	Total BTUH [kW]	96.1 [28.2]	95.1 [27.9]	93.5 [27.4]	93.3 [27.3]	92.3 [27.1]	90.8 [26.6]	90.5 [26.5]	89.5 [26.2]	88.0 [25.8]
		Power	6.3	6.5	6.7	6.9	7.1	7.3	7.6	7.8	8.0
	50°F [10.0°C]	Total BTUH [kW]	102.7 [30.1]	101.6 [29.8]	99.9 [29.3]	99.9 [29.3]	98.8 [29.0]	97.2 [28.5]	97.0 [28.4]	96.0 [28.1]	94.4 [27.7]
		Power	6.4	6.5	6.7	7.0	7.1	7.3	7.7	7.9	8.1

IDB—Indoor air dry bulb

[ ] Designates Metric Conversions

COOLING PERFORMANCE DATA—RHPDZT120A

		ENTERING INDOOR AIR @ 80°F [26.7°C] dbE ①														
	wbE	71°F [21.7°C]			67°F [19.4°C]			63°F [17.2°C]			61°F [16.1°C]			59°F [15.0°C]		
	CFM [L/s]	4560 [2152]	4060 [1916]	3040 [1435]	4560 [2152]	4060 [1916]	3040 [1435]	4560 [2152]	4060 [1916]	3040 [1435]	4560 [2152]	4060 [1916]	3040 [1435]	4560 [2152]	4060 [1916]	3040 [1435]
	DR ①	0.21	0.19	0.13	0.21	0.19	0.13	0.21	0.19	0.13	0.21	0.19	0.13	0.21	0.19	0.13
OUTDOOR DRY BULB TEMPERATURE °F [°C]	75 [23.9] Total BTUH [kW]	143.1 [41.9]	140.0 [41.0]	133.6 [39.1]	134.9 [39.5]	131.9 [38.7]	125.9 [36.9]	128.2 [37.6]	125.4 [36.7]	119.7 [35.1]	125.7 [36.8]	122.9 [36.0]	117.3 [34.4]	123.9 [36.3]	121.2 [35.5]	115.6 [33.9]
	Sens BTUH [kW]	90.5 [26.5]	85.5 [25.1]	75.5 [22.1]	98.5 [28.9]	93.2 [27.3]	82.2 [24.1]	106.9 [31.3]	101.1 [29.6]	89.2 [26.2]	111.2 [32.6]	105.1 [30.8]	92.8 [27.2]	115.5 [33.9]	109.2 [32.0]	96.4 [28.3]
	Power	7.3	7.2	7.1	7.2	7.2	7.0	7.2	7.1	6.9	7.1	7.1	6.9	7.1	7.0	6.9
	80 [26.7] Total BTUH [kW]	139.9 [41.0]	136.9 [40.1]	130.6 [38.3]	131.7 [38.6]	128.8 [37.8]	122.9 [36.0]	125.0 [36.6]	122.3 [35.8]	116.7 [34.2]	122.5 [35.9]	119.8 [35.1]	114.3 [33.5]	120.7 [35.4]	118.1 [34.6]	112.7 [33.0]
	Sens BTUH [kW]	89.4 [26.2]	84.6 [24.8]	74.7 [21.9]	97.5 [28.6]	92.2 [2.07]	81.4 [23.9]	105.9 [31.0]	100.1 [29.3]	88.4 [25.9]	110.2 [32.3]	104.2 [30.5]	92.0 [27.0]	114.5 [33.6]	108.3 [31.7]	95.6 [28.0]
	Power	7.7	7.6	7.4	7.6	7.5	7.4	7.5	7.5	7.3	7.5	7.4	7.3	7.5	7.4	7.2
	85 [29.4] Total BTUH [kW]	136.6 [40.0]	133.6 [39.2]	127.5 [37.4]	128.4 [37.6]	125.6 [36.8]	119.8 [35.1]	121.7 [35.7]	119.0 [34.9]	113.6 [33.3]	119.1 [34.9]	116.5 [34.1]	111.2 [32.6]	117.4 [34.4]	114.8 [33.6]	109.5 [32.1]
	Sens BTUH [kW]	88.1 [25.8]	83.3 [24.4]	73.5 [21.5]	96.1 [28.2]	90.9 [26.6]	80.3 [23.5]	104.5 [30.6]	98.8 [29.0]	87.3 [25.6]	108.8 [31.9]	102.9 [30.2]	90.8 [26.6]	113.1 [33.2]	107.0 [31.4]	94.4 [27.7]
	Power	8.1	8.0	7.8	8.0	7.9	7.7	7.9	7.9	7.7	7.9	7.8	7.6	7.9	7.8	7.6
	90 [32.2] Total BTUH [kW]	133.1 [39.0]	130.2 [38.2]	124.3 [36.4]	124.9 [36.6]	122.1 [35.8]	116.6 [34.2]	118.2 [34.6]	115.6 [33.9]	110.3 [32.3]	115.7 [33.9]	113.1 [33.1]	108.0 [31.6]	113.9 [33.4]	111.4 [32.6]	106.3 [31.1]
	Sens BTUH [kW]	86.4 [25.3]	81.7 [23.9]	72.1 [21.1]	94.4 [27.7]	89.3 [26.2]	78.8 [23.1]	102.8 [30.1]	97.2 [28.5]	85.8 [25.2]	107.1 [31.4]	101.3 [29.7]	89.4 [26.2]	111.4 [32.7]	105.4 [30.9]	93.0 [27.3]
	Power	8.5	8.4	8.2	8.4	8.3	8.2	8.4	8.3	8.1	8.3	8.2	8.1	8.3	8.2	8.0
	95 [35] Total BTUH [kW]	129.5 [37.9]	126.6 [37.1]	120.8 [35.4]	121.2 [35.5]	118.6 [34.7]	113.2 [33.2]	114.5 [33.6]	112.0 [32.8]	106.9 [31.3]	112.0 [32.8]	109.6 [32.1]	104.5 [30.6]	110.2 [32.3]	107.8 [31.6]	102.9 [30.1]
	Sens BTUH [kW]	84.3 [24.7]	79.8 [23.4]	70.4 [20.6]	92.4 [27.1]	87.4 [25.6]	77.1 [22.6]	100.8 [29.5]	95.3 [27.9]	84.1 [24.7]	105.1 [30.8]	99.4 [29.1]	87.7 [25.7]	109.4 [32.1]	103.5 [30.3]	91.3 [26.8]
	Power	8.9	8.9	8.7	8.9	8.8	8.6	8.8	8.7	8.5	8.8	8.7	8.5	8.8	8.7	8.5
	100 [37.8] Total BTUH [kW]	125.7 [36.8]	122.9 [36.0]	117.3 [34.4]	117.4 [34.4]	114.9 [33.7]	109.6 [32.1]	110.7 [32.4]	108.3 [31.7]	103.4 [30.3]	108.2 [31.7]	105.8 [31.0]	101.0 [29.6]	106.4 [31.2]	104.1 [30.5]	99.3 [29.1]
	Sens BTUH [kW]	82.0 [24.0]	77.5 [22.7]	68.4 [20.0]	90.0 [26.4]	85.1 [24.9]	75.2 [22.0]	98.4 [28.8]	93.1 [27.3]	82.1 [24.1]	102.7 [30.1]	97.1 [28.5]	85.7 [25.1]	106.4 [31.2]	101.2 [29.7]	89.3 [26.2]
	Power	9.4	9.3	9.1	9.4	9.3	9.1	9.3	9.2	9.0	9.3	9.2	9.0	9.2	9.1	8.9
	105 [40.6] Total BTUH [kW]	121.7 [35.7]	119.0 [34.9]	113.6 [33.3]	113.5 [33.3]	111.0 [32.5]	105.9 [31.0]	106.8 [31.3]	104.4 [30.6]	99.7 [29.2]	104.2 [30.5]	102.0 [29.9]	97.3 [28.5]	102.5 [30.0]	100.2 [29.4]	95.6 [28.0]
	Sens BTUH [kW]	79.2 [23.2]	74.9 [22.0]	66.2 [19.4]	87.3 [25.6]	82.6 [24.2]	72.9 [21.4]	95.7 [28.0]	90.5 [26.5]	79.9 [23.4]	100.0 [29.3]	94.5 [27.7]	83.5 [24.5]	102.5 [30.0]	98.6 [28.9]	87.1 [25.5]
	Power	9.9	9.8	9.6	9.9	9.8	9.6	9.8	9.7	9.5	9.8	9.7	9.5	9.7	9.6	9.4
	110 [43.3] Total BTUH [kW]	117.6 [34.5]	115.0 [33.7]	109.8 [32.2]	109.4 [32.0]	107.0 [31.3]	102.1 [29.9]	102.7 [30.1]	100.4 [29.4]	95.8 [28.1]	100.1 [29.3]	97.9 [28.7]	93.5 [27.4]	98.4 [28.8]	96.2 [28.2]	91.8 [26.9]
	Sens BTUH [kW]	76.2 [22.3]	72.1 [21.1]	63.6 [18.6]	84.3 [24.7]	79.7 [23.3]	70.3 [20.6]	92.6 [27.1]	87.6 [25.7]	77.3 [22.7]	96.9 [28.4]	91.7 [26.9]	80.9 [23.7]	98.4 [28.8]	95.8 [28.1]	84.5 [24.8]
	Power	10.5	10.4	10.1	10.4	10.3	10.1	10.4	10.2	10.0	10.3	10.2	10.0	10.3	10.2	10.0
	115 [46.1] Total BTUH [kW]	113.3 [33.2]	110.9 [32.5]	105.8 [31.0]	105.1 [30.8]	102.8 [30.1]	98.1 [28.7]	98.4 [28.8]	96.2 [28.2]	91.8 [26.9]	95.9 [28.1]	93.8 [27.5]	89.5 [26.2]	94.1 [27.6]	92.0 [27.0]	87.8 [25.7]
	Sens BTUH [kW]	72.8 [21.3]	68.8 [20.2]	60.8 [17.8]	80.9 [23.7]	76.5 [22.4]	67.5 [19.8]	89.2 [26.2]	84.4 [24.7]	74.5 [21.8]	93.5 [27.4]	88.4 [25.9]	78.1 [22.9]	94.1 [27.6]	92.0 [27.0]	81.7 [23.9]
	Power	11.1	10.9	10.7	11.0	10.9	10.6	10.9	10.8	10.6	10.9	10.8	10.5	10.9	10.7	10.5
	120 [48.9] Total BTUH [kW]	108.9 [31.9]	106.5 [31.2]	101.7 [29.8]	100.7 [29.5]	98.5 [28.9]	94.0 [27.5]	94.0 [27.5]	91.9 [26.9]	87.7 [25.7]	91.5 [26.8]	89.5 [26.2]	85.4 [25.0]	89.7 [26.3]	87.7 [25.7]	83.7 [24.5]
	Sens BTUH [kW]	69.1 [20.2]	65.3 [19.1]	57.7 [16.9]	77.1 [22.6]	72.9 [21.4]	64.4 [18.9]	85.5 [25.1]	80.9 [23.7]	71.4 [20.9]	89.8 [26.3]	84.9 [24.9]	75.0 [22.0]	89.7 [26.3]	87.7 [25.7]	78.6 [23.0]
	Power	11.7	11.5	11.3	11.6	11.5	11.2	11.5	11.4	11.1	11.5	11.4	11.1	11.5	11.3	11.1
	125 [51.7] Total BTUH [kW]	104.3 [30.6]	102.1 [29.9]	97.4 [28.5]	96.1 [28.2]	94.0 [27.5]	89.7 [26.3]	89.4 [26.2]	87.4 [25.6]	83.5 [24.5]	86.9 [25.5]	85.0 [24.9]	81.1 [23.8]	85.1 [24.9]	83.2 [24.4]	79.4 [23.3]
	Sens BTUH [kW]	65.0 [19.0]	61.5 [18.0]	54.3 [15.9]	73.1 [21.4]	69.1 [20.2]	61.0 [17.9]	81.4 [23.9]	77.0 [22.6]	68.0 [19.9]	85.7 [25.1]	81.1 [23.8]	71.6 [21.0]	85.1 [24.9]	83.2 [24.4]	75.2 [22.0]
	Power	12.3	12.2	11.9	12.2	12.1	11.8	12.2	12.0	11.8	12.1	12.0	11.7	12.1	12.0	11.7

DR —Depression ratio
dbE —Entering air dry bulb
wbE—Entering air wet bulb.

Total —Total capacity x 1000 BTUH
Sens —Sensible capacity x 1000 BTUH
Power —KW input

NOTES: ① When the entering air dry bulb is other than 80°F [27°C], adjust the sensible capacity from the table by adding [1.10 x CFM x (1 – DR) x (dbE – 80)].

[ ] Designates Metric Conversions

HEATING PERFORMANCE DATA—RHPDZT120A

IDB			60°F [15.5°C]			70°F [21.1°C]			80°F [26.7°C]		
CFM [L/s]			4560 [2152]	4060 [1916]	3040 [1435]	4560 [2152]	4060 [1916]	3040 [1435]	4560 [2152]	4060 [1916]	3040 [1435]
OUTDOOR DRY BULB TEMPERATURE °F [°C]	0°F [-17.8°C]	Total BTUH [kW]	47.5 [13.9]	47.1 [13.8]	46.2 [13.5]	43.9 [12.9]	43.5 [12.7]	42.7 [12.5]	40.2 [11.8]	39.9 [11.7]	39.1 [11.5]
		Power	5.8	5.9	6.1	6.5	6.6	6.8	7.3	7.4	7.7
	5°F [-15.0°C]	Total BTUH [kW]	54.6 [16.0]	54.1 [15.9]	53.1 [15.6]	50.9 [14.9]	50.5 [14.8]	49.6 [14.5]	47.3 [13.9]	46.9 [13.7]	46.0 [13.5]
		Power	5.9	6.0	6.2	6.6	6.7	6.9	7.4	7.5	7.8
	10°F [-12.2°C]	Total BTUH [kW]	61.7 [18.1]	61.1 [17.9]	60.0 [17.6]	58.0 [17.0]	57.5 [16.9]	56.5 [16.5]	54.4 [15.9]	53.9 [15.8]	52.9 [15.5]
		Power	6.0	6.1	6.3	6.7	6.8	7.1	7.5	7.6	7.9
	15°F [-9.4°C]	Total BTUH [kW]	68.7 [20.1]	68.1 [20.0]	66.9 [19.6]	65.1 [19.1]	64.5 [18.9]	63.4 [18.6]	61.4 [18.0]	60.9 [17.8]	59.8 [17.5]
		Power	6.1	6.2	6.4	6.9	7.0	7.2	7.6	7.8	8.0
	20°F [-6.7°C]	Total BTUH [kW]	75.8 [22.2]	75.1 [22.0]	73.8 [21.6]	72.2 [21.1]	71.5 [21.0]	70.3 [20.6]	68.5 [20.1]	67.9 [19.9]	66.7 [19.5]
		Power	6.3	6.4	6.6	7.0	7.1	7.3	7.8	7.9	8.1
	25°F [-3.9°C]	Total BTUH [kW]	82.9 [24.3]	82.2 [24.1]	80.7 [23.6]	79.2 [23.2]	78.6 [23.0]	77.1 [22.6]	75.6 [22.2]	74.9 [22.0]	73.6 [21.6]
		Power	6.4	6.5	6.7	7.1	7.2	7.4	7.9	8.0	8.2
	30°F [-1.1°C]	Total BTUH [kW]	90 .0[26.4]	89.2 [26.1]	87.6 [25.7]	86.3 [25.3]	85.6 [25.1]	84.0 [24.6]	82.7 [24.2]	82.0 [24.0]	80.5 [23.6]
		Power	6.5	6.6	6.8	7.2	7.3	7.5	8.0	8.1	8.4
	35°F [1.7°C]	Total BTUH [kW]	97.0 [28.4]	96.2 [28.2]	94.5 [27.7]	93.4 [27.4]	92.6 [27.1]	90.9 [26.6]	89.8 [26.3]	89.0 [26.1]	87.4 [25.6]
		Power	6.6	6.7	6.9	7.3	7.4	7.7	8.1	8.2	8.5
	40°F [4.4°C]	Total BTUH [kW]	104.1 [30.5]	103.2 [30.2]	101.4 [29.7]	100.5 [29.4]	99.6 [29.2]	97.8 [28.7]	96.8 [28.4]	96.0 [28.1]	94.3 [27.6]
		Power	6.7	6.8	7.0	7.4	7.5	7.8	8.2	8.3	8.6
	45°F [7.2°C]	Total BTUH [kW]	111.2 [32.6]	110.2 [32.3]	108.2 [31.7]	107.6 [31.5]	106.6 [31.2]	104.7 [30.7]	103.9 [30.4]	103.0 [30.2]	101.2 [29.6]
		Power	6.8	6.9	7.1	7.5	7.6	7.9	8.3	8.4	8.7
	50°F [10.0°C]	Total BTUH [kW]	118.3 [34.7]	117.2 [34.4]	115.1 [33.7]	114.6 [33.6]	113.6 [33.3]	111.6 [32.7]	111.0 [32.5]	110.0 [32.2]	108.0 [31.7]
		Power	6.9	7.0	7.3	7.6	7.8	8.0	8.4	8.6	8.8

IDB—Indoor air dry bulb

[ ] Designates Metric Conversions

AIRFLOW PERFORMANCE— 7.5 TON [26.4 kW] — 60 Hz — DOWNFLOW

Air Flow CFM [L/s]	Model RHPDZ*090* Voltage 208/230, 460, 575 — 3 phase 60 Hz																																							
	External Static Pressure—Inches of Water [kPa]																																							
	0.1 [.02]		0.2 [.05]		0.3 [.07]		0.4 [.10]		0.5 [.12]		0.6 [.15]		0.7 [.17]		0.8 [.20]		0.9 [.22]		1.0 [.25]		1.1 [.27]		1.2 [.30]		1.3 [.32]		1.4 [.35]		1.5 [.37]		1.6 [.40]		1.7 [.42]		1.8 [.45]		1.9 [.47]		2.0 [.50]	
	RPM	W	RPM	W	RPM	W	RPM	W	RPM	W	RPM	W	RPM	W	RPM	W	RPM	W	RPM	W	RPM	W	RPM	W	RPM	W	RPM	W	RPM	W	RPM	W	RPM	W	RPM	W	RPM	W	RPM	W
2400 [1133]	—	—	551	782	585	814	619	848	652	885	684	926	717	969	748	1016	780	1065	810	1118	841	1174	870	1233	900	1294	929	1359	957	1427	985	1498	1012	1572	1039	1649	1065	1729	1091	1813
2500 [1180]	—	—	562	816	596	848	629	884	661	923	693	964	725	1009	756	1057	787	1108	817	1162	846	1219	876	1279	904	1343	933	1409	960	1478	987	1550	1014	1626	1040	1704	1066	1786	1092	1870
2600 [1227]	—	—	574	851	607	885	639	922	671	962	702	1006	733	1052	764	1101	794	1153	823	1209	852	1267	881	1329	909	1393	937	1461	964	1531	990	1605	1016	1682	1042	1762	1067	1844	1092	1930
2700 [1274]	553	857	585	889	618	925	650	963	681	1004	712	1049	742	1096	772	1147	801	1201	830	1258	858	1317	886	1380	914	1446	941	1515	967	1587	993	1662	1019	1740	1044	1821	1068	1905	1092	1993
2800 [1321]	565	896	597	930	629	966	660	1006	691	1049	721	1095	751	1144	780	1196	808	1251	837	1309	864	1370	892	1434	919	1501	945	1572	971	1645	996	1721	1021	1801	1045	1883	1069	1969	1093	2057
2900 [1368]	577	937	609	972	640	1010	670	1051	701	1096	730	1143	759	1193	788	1246	816	1303	843	1362	871	1425	897	1490	923	1559	949	1630	974	1705	999	1783	1023	1864	1047	1948	1070	2035	1093	2124
3000 [1416]	590	981	621	1017	651	1057	681	1099	710	1145	739	1193	768	1245	796	1300	823	1357	850	1418	877	1482	903	1549	928	1619	953	1692	978	1768	1002	1847	1026	1929	1049	2014	1072	2103	1094	2194
3100 [1463]	602	1027	633	1065	662	1105	692	1149	720	1196	749	1246	777	1299	804	1355	831	1414	857	1476	883	1541	908	1610	933	1681	958	1755	982	1833	1005	1913	1028	1997	1051	2083	1073	2173	1094	2266
3200 [1510]	615	1075	645	1114	674	1157	702	1202	731	1250	758	1301	785	1356	812	1413	838	1473	864	1537	889	1603	914	1673	938	1746	962	1821	986	1900	1008	1982	1031	2067	1053	2155	1074	2246	1095	2340
3300 [1557]	628	1126	657	1166	685	1210	713	1256	741	1306	768	1359	794	1414	820	1473	846	1535	871	1600	896	1668	920	1739	944	1813	967	1890	989	1970	1012	2053	1033	2139	1055	2229	1075	2321	1096	2416
3400 [1604]	640	1179	669	1221	697	1266	724	1314	751	1365	777	1419	803	1476	829	1536	854	1599	878	1665	902	1734	926	1807	949	1882	971	1960	993	2042	1015	2126	1036	2214	1057	2305	1077	2398	1097	2495
3500 [1652]	653	1235	681	1278	708	1324	735	1373	761	1425	787	1481	812	1539	837	1601	861	1665	885	1733	909	1803	932	1877	954	1954	976	2034	997	2116	1018	2202	1039	2291	1059	2383	1078	2478	1097	2576
3600 [1699]	666	1292	693	1337	720	1384	746	1435	771	1489	797	1545	821	1605	845	1668	869	1734	892	1803	915	1875	938	1950	959	2028	981	2109	1001	2193	1022	2280	1042	2371	1061	2464	1080	2560	1098	2660

NOTE: A/F-Drive left of the bold line, B/G-Drive right of bold lines, C/H-Drive right of double line.

Drive Package	A/F						B/G						C/H					
Motor H.P. [W]	2 [1491.4]						3 [2237.1]						3 [2237.1]					
Blower Sheave	AK84H						AK84H						AK84H					
Motor Sheave	1VL40*7/8						1VP50*7/8						1VP56*7/8					
Belt	A49						A50						A51					
Turns Open	0	1	**2**	3	4	5	0	1	2	3	4	**5**	0	1	2	3	4	**5**
RPM	767	721	**678**	635	590	548	992	949	908	866	823	**782**	1108	1067	1029	987	946	**905**

NOTES: 1. Factory sheave settings are shown in bold type.
2. Do not set motor sheave below minimum or maximum turns open shown.
3. Re-adjustment of sheave required to achieve rated airflow at AHRI minimum External Static Pressure
4. Add component resistance (below) to duct resistance to determine total External Static Pressure.

[ ] Designates Metric Conversions

AIRFLOW PERFORMANCE— 7.5 TON [26.4 kW] — 60 Hz — DOWNFLOW (con't.)

Airflow	AIRFLOW CORRECTION FACTORS *			COMPONENT AIRFLOW RESISTANCE			
				Wet Coil	Vertical Economizer RA Damper Open	Concentric Diffuser RXRN-AEF2000 & Concentric Adapter RXMC-DD01 (Flush)	Concentric Diffuser RXRN-AED2000 & Concentric Adapter RXMC-DD01 (Drop)
CFM [L/s]	Total MBH	Sensible MBH	Power kW	Resistance — Inches of Water [kPa]			
2400 [1133]	0.97	0.92	0.99	0.06 [.01]	0.01 [.00]	0.66 [.16]	0.53 [.13]
2500 [1180]	0.98	0.93	0.99	0.06 [.01]	0.02 [.00]	0.71 [.18]	0.57 [.14]
2600 [1227]	0.99	0.95	0.99	0.06 [.02]	0.02 [.01]	0.75 [.19]	0.60 [.15]
2700 [1274]	0.99	0.96	0.99	0.07 [.02]	0.03 [.01]	0.80 [.20]	0.65 [.16]
2800 [1321]	0.99	0.98	1.00	0.07 [.02]	0.04 [.01]	0.85 [.21]	0.69 [.17]
2900 [1368]	1.00	1.00	1.00	0.08 [.02]	0.04 [.01]	0.91 [.23]	0.74 [.18]
3000 [1416]	1.01	1.01	1.00	0.08 [.02]	0.05 [.01]	0.96 [.24]	0.79 [.20]
3100 [1463]	1.01	1.03	1.00	0.09 [.02]	0.06 [.02]	1.02 [.25]	0.86 [.21]
3200 [1510]	1.02	1.04	1.01	0.10 [.02]	0.07 [.02]	1.08 [.27]	0.92 [.23]
3300 [1557]	1.02	1.06	1.01	0.10 [.02]	0.08 [.02]	1.15 [.29]	0.99 [.25]
3400 [1604]	1.03	1.08	1.01	0.11 [.03]	0.09 [.02]	1.21 [.30]	1.05 [.26]
3500 [1652]	1.04	1.09	1.01	0.11 [.03]	0.10 [.02]	1.29 [.32]	1.09 [.27]
3600 [1699]	1.04	1.11	1.02	0.12 [.03]	0.11 [.03]	1.36 [.34]	1.13 [.28]

*Multiply correction factor times gross performance data resulting sensible capacity cannot exceed total capacity.

[ ] Designates Metric Conversions

AIRFLOW PERFORMANCE— 7.5 TON [26.4 kW] — 60 Hz — SIDEFLOW

Air Flow CFM [L/s]	Model RHPDZ*090* Voltage 208/230, 460, 575 — 3 phase 60 Hz																																							
	External Static Pressure—Inches of Water [kPa]																																							
	0.1 [.02]		0.2 [.05]		0.3 [.07]		0.4 [.10]		0.5 [.12]		0.6 [.15]		0.7 [.17]		0.8 [.20]		0.9 [.22]		1.0 [.25]		1.1 [.27]		1.2 [.30]		1.3 [.32]		1.4 [.35]		1.5 [.37]		1.6 [.40]		1.7 [.42]		1.8 [.45]		1.9 [.47]		2.0 [.50]	
	RPM	W	RPM	W	RPM	W	RPM	W	RPM	W	RPM	W	RPM	W	RPM	W	RPM	W	RPM	W	RPM	W	RPM	W	RPM	W	RPM	W	RPM	W	RPM	W	RPM	W	RPM	W	RPM	W	RPM	W	RPM	W
2400 [1133]	—	—	—	—	558	822	594	853	629	887	663	925	697	965	730	1009	763	1056	794	1106	826	1159	856	1216	886	1275	915	1338	943	1404	971	1474	998	1546	1025	1622	1051	1700	1076	1782
2500 [1180]	—	—	—	—	568	848	604	881	638	917	672	956	705	998	738	1044	769	1092	801	1144	831	1199	861	1258	890	1319	919	1384	947	1452	974	1523	1001	1597	1027	1674	1052	1755	1077	1838
2600 [1227]	—	—	543	846	579	877	613	912	647	950	681	991	713	1035	745	1082	777	1132	807	1186	837	1243	867	1303	895	1366	923	1433	951	1502	978	1575	1004	1651	1029	1730	1054	1812	1078	1898
2700 [1274]	—	—	554	877	589	910	623	946	657	986	689	1029	722	1074	753	1124	784	1176	814	1231	844	1290	872	1352	901	1417	928	1485	955	1556	981	1631	1007	1708	1032	1789	1056	1873	1079	1961
2800 [1321]	—	—	566	911	600	946	634	984	666	1026	699	1070	730	1118	761	1169	792	1223	821	1280	850	1340	878	1404	906	1470	933	1540	959	1613	985	1690	1010	1769	1034	1852	1058	1938	1081	2027
2900 [1368]	543	916	577	949	611	986	644	1026	676	1069	708	1115	739	1164	770	1217	799	1273	828	1332	857	1394	885	1459	912	1528	938	1599	964	1674	989	1752	1014	1833	1037	1918	1061	2005	1083	2096
3000 [1416]	555	955	589	990	622	1029	655	1070	687	1115	718	1163	748	1214	778	1269	807	1326	836	1387	864	1451	891	1518	918	1588	944	1662	969	1738	994	1818	1017	1901	1041	1987	1063	2077	1085	2169
3100 [1463]	568	998	601	1035	634	1075	666	1118	697	1165	728	1215	758	1268	787	1324	816	1383	844	1445	871	1511	898	1580	924	1652	949	1727	974	1806	998	1887	1022	1972	1044	2060	1066	2151	1088	2245
3200 [1510]	581	1044	614	1083	646	1125	677	1170	708	1218	738	1270	768	1324	796	1382	824	1443	852	1507	879	1575	905	1646	931	1719	955	1796	980	1876	1003	1960	1026	2046	1048	2136	1070	2229	1091	2325
3300 [1557]	594	1093	626	1134	658	1178	689	1225	719	1275	749	1328	778	1384	806	1444	833	1507	860	1573	887	1642	912	1714	937	1790	962	1869	985	1951	1008	2036	1031	2124	1052	2216	1073	2310	1094	2408
3400 [1604]	607	1146	639	1189	670	1234	701	1283	730	1335	759	1390	788	1448	815	1509	843	1574	869	1642	895	1713	920	1787	944	1864	968	1945	991	2028	1014	2115	1036	2205	1057	2298	1077	2395	1097	2494
3500 [1652]	621	1203	652	1247	683	1294	713	1344	742	1398	770	1455	798	1515	825	1578	852	1644	878	1714	903	1786	928	1862	952	1941	975	2024	997	2109	1019	2198	1041	2290	1061	2385	1081	2483	1101	2584
3600 [1699]	635	1262	666	1308	696	1357	725	1409	754	1465	782	1523	809	1585	836	1650	862	1718	887	1789	912	1864	936	1941	959	2022	982	2106	1004	2194	1025	2284	1046	2378	1066	2474	1086	2574	1104	2677

NOTE: A/F-Drive left of the bold line, B/G-Drive right of bold lines, C/H-Drive right of double line.

Drive Package	A/F						B/G						C/H					
Motor H.P. [W]	2 [1491.4]						3 [2237.1]						3 [2237.1]					
Blower Sheave	AK84H						AK84H						AK84H					
Motor Sheave	1VL40*7/8						1VP50*7/8						1VP56*7/8					
Belt	A49						A50						A51					
Turns Open	0	1	**2**	3	4	5	0	1	2	3	4	**5**	0	1	**2**	3	4	**5**
RPM	765	720	**676**	633	589	544	989	949	908	865	823	**780**	1108	1067	1029	987	946	**905**

NOTES: 1. Factory sheave settings are shown in bold type.
2. Do not set motor sheave below minimum or maximum turns open shown.
3. Re-adjustment of sheave required to achieve rated airflow at AHRI minimum External Static Pressure
4. Add component resistance (below) to duct resistance to determine total External Static Pressure.

[ ] Designates Metric Conversions

AIRFLOW PERFORMANCE— 7.5 TON [26.4 kW] — 60 Hz — SIDEFLOW (con't.)

Airflow	AIRFLOW CORRECTION FACTORS *			COMPONENT AIRFLOW RESISTANCE			
				Wet Coil	Horizontal Economizer RA Damper Open	Concentric Diffuser RXRN-AEF2000 & Concentric Adapter RXMC-DD01 (Flush)	Concentric Diffuser RXRN-AED2000 & Concentric Adapter RXMC-DD01 (Drop)
CFM [L/s]	Total MBH	Sensible MBH	Power kW	Resistance — Inches of Water [kPa]			
2400 [1133]	0.97	0.92	0.99	0.06 [.01]	0.01 [.00]	0.66 [.16]	0.53 [.13]
2500 [1180]	0.97	0.93	0.99	0.06 [.01]	0.02 [.00]	0.71 [.18]	0.57 [.14]
2600 [1227]	0.98	0.95	0.99	0.06 [.02]	0.02 [.00]	0.75 [.19]	0.60 [.15]
2700 [1274]	0.99	0.96	0.99	0.07 [.02]	0.03 [.01]	0.80 [.20]	0.65 [.16]
2800 [1321]	0.99	0.98	1.00	0.07 [.02]	0.04 [.01]	0.85 [.21]	0.69 [.17]
2900 [1368]	1.00	1.00	1.00	0.08 [.02]	0.04 [.01]	0.91 [.23]	0.74 [.18]
3000 [1416]	1.01	1.01	1.00	0.08 [.02]	0.05 [.01]	0.96 [.24]	0.79 [.20]
3100 [1463]	1.01	1.03	1.00	0.09 [.02]	0.06 [.01]	1.02 [.25]	0.86 [.21]
3200 [1510]	1.02	1.04	1.01	0.10 [.02]	0.07 [.02]	1.08 [.27]	0.92 [.23]
3300 [1557]	1.02	1.06	1.01	0.10 [.03]	0.08 [.02]	1.15 [.29]	0.99 [.25]
3400 [1604]	1.03	1.08	1.01	0.11 [.03]	0.09 [.02]	1.21 [.30]	1.05 [.26]
3500 [1652]	1.04	1.09	1.01	0.11 [.03]	0.10 [.02]	1.29 [.32]	1.09 [.27]
3600 [1699]	1.04	1.11	1.02	0.12 [.03]	0.11 [.03]	1.36 [.34]	1.13 [.28]

*Multiply correction factor times gross performance data resulting sensible capacity cannot exceed total capacity.

[ ] Designates Metric Conversions

AIRFLOW PERFORMANCE—8.5 TON [29.9 kW] — 60 Hz — DOWNFLOW

Air Flow CFM [L/s]	Model RHPDZ*102* Voltage 208/230, 460, 575 — 3 phase 60 Hz																																									
	External Static Pressure—Inches of Water [kPa]																																									
	0.1 [.02]		0.2 [.05]		0.3 [.07]		0.4 [.10]		0.5 [.12]		0.6 [.15]		0.7 [.17]		0.8 [.20]		0.9 [.22]		1.0 [.25]		1.1 [.27]		1.2 [.30]		1.3 [.32]		1.4 [.35]		1.5 [.37]		1.6 [.40]		1.7 [.42]		1.8 [.45]		1.9 [.47]		2.0 [.50]	
	RPM	W	RPM	W	RPM	W	RPM	W	RPM	W	RPM	W	RPM	W	RPM	W	RPM	W	RPM	W	RPM	W	RPM	W	RPM	W	RPM	W	RPM	W	RPM	W	RPM	W	RPM	W	RPM	W	RPM	W	RPM	W
2700 [1274]	—	—	561	894	596	934	631	975	665	1018	698	1062	730	1108	762	1155	793	1203	823	1253	853	1304	882	1357	910	1411	937	1467	964	1524	990	1583	1015	1643	1039	1704	1063	1767	1086	1832
2800 [1321]	—	—	573	927	608	969	642	1013	676	1058	708	1104	740	1152	771	1201	802	1252	832	1304	861	1358	889	1413	917	1470	943	1528	970	1587	995	1648	1020	1711	1044	1775	1067	1840	1090	1907
2900 [1368]	—	—	586	964	620	1008	654	1054	687	1101	719	1150	750	1200	781	1252	811	1305	840	1360	869	1416	897	1473	924	1532	950	1593	976	1654	1001	1718	1025	1782	1048	1848	1071	1916	1093	1985
3000 [1416]	564	959	599	1004	633	1051	666	1099	698	1149	730	1200	761	1253	791	1307	820	1362	849	1419	877	1477	904	1537	931	1598	957	1661	982	1725	1006	1791	1030	1858	1053	1926	1075	1996	1097	2067
3100 [1463]	578	1001	612	1048	645	1098	678	1148	710	1200	741	1254	771	1308	801	1365	830	1423	858	1482	886	1542	912	1605	939	1668	964	1733	989	1800	1012	1868	1036	1937	1058	2008	1080	2080	1101	2154
3200 [1510]	592	1046	625	1096	658	1148	690	1201	721	1255	752	1311	782	1368	811	1427	840	1487	867	1548	894	1611	921	1676	946	1742	971	1809	995	1878	1019	1948	1041	2020	1063	2093	1085	2168	1105	2244
3300 [1557]	605	1096	638	1148	671	1202	702	1257	733	1314	763	1372	793	1432	821	1493	849	1555	877	1619	903	1684	929	1751	954	1819	979	1889	1002	1960	1025	2033	1047	2107	1069	2182	1090	2259	1110	2337
3400 [1604]	619	1149	652	1204	684	1260	715	1317	745	1376	775	1437	804	1499	832	1562	860	1627	886	1693	912	1761	938	1830	962	1900	986	1972	1009	2046	1032	2121	1053	2197	1074	2275	1095	2354	1114	2435
3500 [1652]	634	1206	666	1263	697	1322	728	1382	758	1443	787	1506	815	1570	843	1635	870	1702	896	1771	922	1841	946	1912	970	1985	994	2060	1017	2135	1038	2213	1060	2291	1080	2371	1100	2453	1119	2536
3600 [1699]	648	1267	680	1326	711	1387	741	1449	770	1513	799	1578	827	1645	854	1713	880	1782	906	1853	931	1925	955	1999	979	2074	1002	2151	1024	2229	1045	2308	1066	2389	1086	2472	1105	2556	1124	2641
3700 [1746]	663	1332	694	1393	724	1456	754	1521	783	1587	811	1654	838	1723	865	1793	891	1865	916	1938	941	2013	965	2089	988	2167	1010	2246	1032	2326	1053	2408	1073	2491	1092	2576	1111	2662	1129	2750
3800 [1793]	678	1400	708	1464	738	1529	767	1596	795	1665	823	1734	850	1805	876	1878	902	1952	926	2028	951	2105	974	2183	996	2263	1018	2344	1039	2427	1060	2511	1080	2597	1099	2684	1117	2772	1134	2862
3900 [1840]	693	1472	723	1538	752	1606	781	1675	808	1746	836	1818	862	1892	888	1966	913	2043	937	2121	961	2200	983	2281	1005	2363	1027	2447	1048	2532	1067	2618	1087	2706	1105	2796	1123	2886	1140	2979
4000 [1888]	708	1548	737	1617	766	1687	794	1758	822	1831	848	1906	874	1981	900	2059	924	2137	948	2218	971	2299	993	2382	1015	2467	1036	2553	1056	2640	1075	2729	1094	2819	1112	2911	1129	3004	1146	3099
4100 [1935]	723	1628	752	1699	781	1771	808	1845	835	1920	861	1997	887	2075	911	2155	935	2236	959	2318	981	2402	1003	2488	1024	2574	1045	2663	1064	2752	1083	2844	1101	2936	1119	3030	1136	3126	1152	3223

NOTE: A/F-Drive left of the bold line, B/G-Drive right of bold lines, C/H-Drive right of double line.

Drive Package	A/F						B/G						C/H					
Motor H.P. [W]	2 [1491.4]						3 [2237.1]						3 [2237.1]					
Blower Sheave	AK79H						AK79H						AK79H					
Motor Sheave	1VL40*7/8						1VP50*7/8						1VP56*7/8					
Belt	A49						A50						A51					
Turns Open	0	1	**2**	3	4	5	0	1	2	3	4	**5**	0	1	2	3	4	**5**
RPM	804	758	**710**	661	616	559	1048	1003	959	914	872	**826**	1168	1128	1087	1044	1002	**957**

NOTES: 1. Factory sheave settings are shown in bold type.
2. Do not set motor sheave below minimum or maximum turns open shown.
3. Re-adjustment of sheave required to achieve rated airflow at AHRI minimum External Static Pressure
4. Add component resistance (below) to duct resistance to determine total External Static Pressure.

[ ] Designates Metric Conversions

AIRFLOW PERFORMANCE— 8.5 TON [29.9 kW] — 60 Hz — DOWNFLOW (con't.)

Airflow	AIRFLOW CORRECTION FACTORS *			COMPONENT AIRFLOW RESISTANCE			
				Wet Coil	Vertical Economizer RA Damper Open	Concentric Diffuser RXRN-AEF2000 & Concentric Adapter RXMC-DD01 (Flush)	Concentric Diffuser RXRN-AED2000 & Concentric Adapter RXMC-DD01 (Drop)
CFM [L/s]	Total MBH	Sensible MBH	Power kW	Resistance — Inches of Water [kPa]			
2700 [1274]	0.99	0.96	0.99	0.07 [.02]	0.03 [.01]	0.80 [.20]	0.65 [.16]
2800 [1321]	0.99	0.98	1.00	0.07 [.02]	0.03 [.01]	0.85 [.21]	0.69 [.17]
2900 [1368]	1.00	1.00	1.00	0.08 [.02]	0.04 [.01]	0.91 [.23]	0.74 [.18]
3000 [1416]	1.01	1.01	1.00	0.08 [.02]	0.05 [.01]	0.96 [.24]	0.79 [.20]
3100 [1463]	1.01	1.03	1.00	0.09 [.02]	0.06 [.01]	1.02 [.25]	0.86 [.21]
3200 [1510]	1.02	1.04	1.01	0.10 [.02]	0.07 [.02]	1.08 [.27]	0.92 [.23]
3300 [1557]	1.02	1.06	1.01	0.10 [.03]	0.08 [.02]	1.15 [.29]	0.99 [.25]
3400 [1604]	1.03	1.08	1.01	0.11 [.03]	0.09 [.02]	1.21 [.30]	1.05 [.26]
3500 [1652]	1.04	1.09	1.01	0.11 [.03]	0.10 [.02]	1.29 [.32]	1.09 [.27]
3600 [1699]	1.04	1.11	1.02	0.12 [.03]	0.11 [.03]	1.36 [.34]	1.13 [.28]
3700 [1746]	1.05	1.12	1.02	0.13 [.03]	0.12 [.03]	1.43 [.36]	1.18 [.29]
3800 [1793]	1.05	1.14	1.02	0.13 [.03]	0.13 [.03]	1.50 [.37]	1.23 [.31]
3900 [1840]	1.06	1.16	1.02	0.14 [.04]	0.15 [.04]	1.59 [.40]	1.31 [.33]
4000 [1888]	1.07	1.17	1.02	0.14 [.04]	0.16 [.04]	1.68 [.42]	1.38 [.34]
4100 [1935]	1.07	1.19	1.03	0.15 [.04]	0.17 [.04]	1.74 [.43]	1.44 [.36]

*Multiply correction factor times gross performance data resulting sensible capacity cannot exceed total capacity.

[ ] Designates Metric Conversions

AIRFLOW PERFORMANCE—8.5 TON [29.9 kW] — 60 Hz — SIDEFLOW

Air Flow CFM [L/s]	Model RHPDZ*102* Voltage 208/230, 460, 575 — 3 phase 60 Hz																																							
	External Static Pressure—Inches of Water [kPa]																																							
	0.1 [.02]		0.2 [.05]		0.3 [.07]		0.4 [.10]		0.5 [.12]		0.6 [.15]		0.7 [.17]		0.8 [.20]		0.9 [.22]		1.0 [.25]		1.1 [.27]		1.2 [.30]		1.3 [.32]		1.4 [.35]		1.5 [.37]		1.6 [.40]		1.7 [.42]		1.8 [.45]		1.9 [.47]		2.0 [.50]	
	RPM	W	RPM	W	RPM	W	RPM	W	RPM	W	RPM	W	RPM	W	RPM	W	RPM	W	RPM	W	RPM	W	RPM	W	RPM	W	RPM	W	RPM	W	RPM	W	RPM	W	RPM	W	RPM	W	RPM	W	RPM	W
2700 [1274]	—	—	—	—	577	932	611	969	644	1009	677	1052	710	1098	742	1147	774	1199	806	1254	837	1312	868	1373	898	1437	929	1505	959	1575	988	1648	1017	1725	1046	1804	1074	1886	1102	1972
2800 [1321]	—	—	556	926	589	962	622	1000	655	1042	687	1087	719	1134	751	1185	783	1239	814	1295	844	1355	875	1418	905	1484	934	1553	963	1624	992	1699	1021	1777	1049	1858	1077	1942	1105	2029
2900 [1368]	—	—	568	958	601	995	633	1036	666	1079	697	1125	729	1174	760	1227	791	1282	821	1340	851	1402	881	1466	911	1533	940	1604	968	1677	997	1754	1025	1834	1052	1916	1080	2002	1107	2090
3000 [1416]	—	—	580	994	613	1033	645	1074	676	1119	708	1167	738	1218	769	1272	799	1329	829	1389	859	1452	888	1518	917	1587	945	1659	973	1734	1001	1812	1029	1894	1056	1978	1082	2065	1109	2155
3100 [1463]	561	996	593	1033	624	1073	656	1117	687	1163	718	1213	748	1265	778	1321	808	1379	837	1441	866	1506	895	1573	923	1644	951	1718	978	1794	1006	1874	1033	1957	1059	2043	1085	2132	1111	2224
3200 [1510]	574	1037	605	1076	636	1118	667	1163	698	1211	728	1262	758	1316	787	1373	816	1434	845	1497	873	1563	902	1632	929	1705	957	1780	984	1858	1010	1940	1037	2024	1063	2112	1088	2202	1113	2296
3300 [1557]	587	1082	618	1122	648	1166	679	1212	709	1262	738	1315	767	1371	796	1430	825	1491	853	1556	881	1624	908	1695	936	1769	962	1846	989	1926	1015	2009	1041	2095	1066	2184	1091	2276	1116	2372
3400 [1604]	600	1130	630	1172	660	1217	690	1266	720	1317	749	1371	777	1429	806	1489	834	1553	861	1619	888	1689	915	1761	942	1837	968	1916	994	1997	1020	2082	1045	2170	1070	2260	1094	2354	1118	2451
3500 [1652]	613	1182	643	1226	672	1273	702	1323	730	1376	759	1432	787	1491	815	1553	842	1618	869	1686	896	1757	922	1831	948	1909	974	1989	999	2072	1024	2158	1049	2248	1073	2340	1097	2436	1121	2534
3600 [1699]	626	1238	656	1283	685	1332	713	1383	741	1438	769	1495	797	1556	824	1620	851	1687	877	1756	904	1829	929	1905	955	1984	980	2066	1005	2151	1029	2238	1053	2329	1077	2423	1100	2520	1123	2621
3700 [1746]	640	1297	668	1344	697	1394	725	1447	753	1504	780	1563	807	1625	833	1690	860	1759	886	1830	911	1905	937	1982	961	2063	986	2146	1010	2233	1034	2322	1057	2415	1081	2510	1103	2609	1126	2711
3800 [1793]	653	1360	681	1409	709	1460	737	1515	764	1573	790	1634	817	1698	843	1765	869	1835	894	1908	919	1984	944	2063	968	2145	992	2230	1016	2318	1039	2410	1062	2504	1084	2601	1107	2701	1128	2805
3900 [1840]	667	1426	694	1477	721	1530	748	1587	775	1646	801	1709	827	1774	852	1843	878	1914	902	1989	927	2067	951	2147	975	2231	998	2318	1021	2408	1044	2500	1066	2596	1088	2695	1110	2797	1131	2902
4000 [1888]	680	1496	707	1548	734	1604	760	1662	786	1723	812	1787	837	1854	862	1924	887	1998	911	2074	935	2153	958	2235	981	2321	1004	2409	1027	2501	1049	2595	1071	2693	1092	2793	1113	2897	1134	3003
4100 [1935]	694	1570	720	1624	746	1681	772	1740	797	1803	822	1869	847	1938	872	2009	896	2084	919	2162	943	2243	965	2327	988	2414	1010	2504	1032	2597	1054	2693	1075	2792	1096	2895	1116	3000	1137	3108

NOTE: A/F-Drive left of the bold line, B/G-Drive right of bold lines, C/H-Drive right of double line.

Drive Package	A/F						B/G						C/H					
Motor H.P. [W]	2 [1491.4]						3 [2237.1]						3 [2237.1]					
Blower Sheave	AK79H						AK79H						AK79H					
Motor Sheave	1VL40*7/8						1VP50*7/8						1VP56*7/8					
Belt	A49						A50						A51					
Turns Open	0	1	**2**	3	4	5	0	1	2	3	4	**5**	0	1	2	3	4	**5**
RPM	802	754	**707**	662	616	555	1048	1005	960	916	870	**827**	1170	1126	1085	1044	1000	**956**

NOTES: 1. Factory sheave settings are shown in bold type.
2. Do not set motor sheave below minimum or maximum turns open shown.
3. Re-adjustment of sheave required to achieve rated airflow at AHRI minimum External Static Pressure
4. Add component resistance (below) to duct resistance to determine total External Static Pressure.

[ ] Designates Metric Conversions

AIRFLOW PERFORMANCE— 8.5 TON [29.9 kW] — 60 Hz — SIDEFLOW (con't.)

Airflow	AIRFLOW CORRECTION FACTORS *			COMPONENT AIRFLOW RESISTANCE			
				Wet Coil	Horizontal Economizer RA Damper Open	Concentric Diffuser RXRN-AEF2000 & Concentric Adapter RXMC-DD01 (Flush)	Concentric Diffuser RXRN-AED2000 & Concentric Adapter RXMC-DD01 (Drop)
CFM [L/s]	Total MBH	Sensible MBH	Power kW	Resistance — Inches of Water [kPa]			
2700 [1274]	0.99	0.96	0.99	0.07 [.02]	0.03 [.01]	0.80 [.20]	0.65 [.16]
2800 [1321]	0.99	0.98	1.00	0.07 [.02]	0.03 [.01]	0.85 [.21]	0.69 [.17]
2900 [1368]	1.00	1.00	1.00	0.08 [.02]	0.04 [.01]	0.91 [.23]	0.74 [.18]
3000 [1416]	1.01	1.01	1.00	0.08 [.02]	0.05 [.01]	0.96 [.24]	0.79 [.20]
3100 [1463]	1.01	1.03	1.00	0.09 [.02]	0.06 [.01]	1.02 [.25]	0.86 [.21]
3200 [1510]	1.02	1.04	1.01	0.10 [.02]	0.07 [.02]	1.08 [.27]	0.92 [.23]
3300 [1557]	1.02	1.06	1.01	0.10 [.03]	0.08 [.02]	1.15 [.29]	0.99 [.25]
3400 [1604]	1.03	1.08	1.01	0.11 [.03]	0.09 [.02]	1.21 [.30]	1.05 [.26]
3500 [1652]	1.04	1.09	1.01	0.11 [.03]	0.10 [.02]	1.29 [.32]	1.09 [.27]
3600 [1699]	1.04	1.11	1.02	0.12 [.03]	0.11 [.03]	1.36 [.34]	1.13 [.28]
3700 [1746]	1.05	1.12	1.02	0.13 [.03]	0.12 [.03]	1.43 [.36]	1.18 [.29]
3800 [1793]	1.05	1.14	1.02	0.13 [.03]	0.13 [.03]	1.50 [.37]	1.23 [.31]
3900 [1840]	1.06	1.16	1.02	0.14 [.04]	0.15 [.04]	1.59 [.40]	1.31 [.33]
4000 [1888]	1.07	1.17	1.02	0.15 [.04]	0.16 [.04]	1.68 [.42]	1.38 [.34]
4100 [1935]	1.07	1.19	1.03	0.15 [.04]	0.17 [.04]	1.74 [.43]	1.44 [.36]

*Multiply correction factor times gross performance data resulting sensible capacity cannot exceed total capacity.

[ ] Designates Metric Conversions

AIRFLOW PERFORMANCE—10 TON [35.1 kW] — 60 Hz — DOWNFLOW

Air Flow CFM [L/s]	Model RHPDZ*120* Voltage 208/230, 460, 575 — 3 phase 60 Hz																																							
	External Static Pressure—Inches of Water [kPa]																																							
	0.1 [.02]		0.2 [.05]		0.3 [.07]		0.4 [.10]		0.5 [.12]		0.6 [.15]		0.7 [.17]		0.8 [.20]		0.9 [.22]		1.0 [.25]		1.1 [.27]		1.2 [.30]		1.3 [.32]		1.4 [.35]		1.5 [.37]		1.6 [.40]		1.7 [.42]		1.8 [.45]		1.9 [.47]		2.0 [.50]	
	RPM	W	RPM	W	RPM	W	RPM	W	RPM	W	RPM	W	RPM	W	RPM	W	RPM	W	RPM	W	RPM	W	RPM	W	RPM	W	RPM	W	RPM	W	RPM	W	RPM	W	RPM	W	RPM	W	RPM	W	RPM	W
3200 [1510]	620	952	648	1005	676	1059	704	1115	732	1174	759	1234	785	1295	812	1359	838	1425	864	1492	889	1562	914	1633	939	1706	964	1781	988	1858	1011	1937	1035	2017	1058	2100	1081	2184	1103	2270
3300 [1557]	634	998	662	1053	690	1110	718	1169	745	1229	771	1292	798	1356	824	1422	850	1491	875	1561	900	1632	925	1706	949	1782	973	1859	997	1939	1020	2020	1043	2103	1066	2188	1088	2275	1110	2363
3400 [1604]	649	1049	677	1106	704	1166	731	1227	758	1290	784	1355	810	1422	836	1491	861	1561	886	1634	911	1708	935	1784	959	1863	983	1942	1006	2024	1029	2108	1052	2194	1074	2281	1096	2370	1118	2462
3500 [1652]	663	1105	691	1165	718	1227	744	1291	771	1356	797	1424	822	1493	848	1564	873	1637	897	1712	922	1789	946	1868	969	1948	993	2031	1016	2115	1038	2201	1060	2289	1082	2379	1104	2471	1125	2565
3600 [1699]	678	1166	705	1229	732	1293	758	1359	784	1427	809	1497	835	1569	860	1643	884	1718	909	1796	932	1875	956	1956	979	2039	1002	2124	1025	2211	1047	2300	1069	2390	1091	2483	1112	2577	1133	2673
3700 [1746]	693	1232	719	1297	745	1364	771	1433	797	1503	822	1576	847	1650	872	1726	896	1804	920	1884	943	1966	967	2050	990	2135	1012	2223	1034	2312	1056	2403	1078	2496	1099	2591	1120	2688	1140	2787
3800 [1793]	707	1303	734	1371	759	1440	785	1511	810	1584	835	1659	860	1736	884	1815	908	1896	931	1978	954	2062	977	2148	1000	2237	1022	2326	1044	2418	1065	2512	1086	2607	1107	2705	1128	2804	1148	2905
3900 [1840]	722	1380	748	1450	773	1521	799	1595	823	1671	848	1748	872	1827	896	1909	919	1992	942	2077	965	2163	988	2252	1010	2343	1032	2435	1053	2529	1074	2626	1095	2724	1116	2823	1136	2925	1156	3029
4000 [1888]	737	1461	762	1533	787	1608	812	1684	837	1762	861	1842	884	1924	908	2007	931	2093	954	2180	976	2270	998	2361	1020	2454	1042	2549	1063	2646	1083	2744	1104	2845	1124	2947	1144	3051	1163	3158
4100 [1935]	752	1547	777	1622	801	1699	826	1778	850	1858	874	1941	897	2025	920	2111	943	2199	965	2289	987	2381	1009	2475	1030	2570	1051	2668	1072	2767	1093	2868	1113	2971	1132	3076	1152	3183	—	—
4200 [1982]	766	1639	791	1716	815	1796	839	1877	863	1960	887	2045	910	2132	932	2220	955	2311	977	2403	998	2497	1020	2594	1041	2692	1061	2792	1082	2893	1102	2997	1121	3102	1141	3210	1160	3319	—	—
4300 [2029]	781	1735	806	1815	830	1897	853	1981	877	2066	900	2154	922	2243	944	2334	966	2427	988	2522	1009	2619	1030	2718	1051	2818	1071	2920	1091	3025	1111	3131	1130	3239	1149	3349	—	—	—	—
4400 [2076]	796	1837	820	1919	844	2004	867	2090	890	2178	913	2268	935	2360	957	2453	978	2549	1000	2646	1021	2745	1041	2847	1061	2950	1081	3054	1101	3161	1120	3270	1139	3380	1158	3493	—	—	—	—
4500 [2123]	811	1944	835	2029	858	2115	881	2204	903	2295	926	2387	947	2481	969	2577	990	2675	1011	2775	1032	2877	1052	2981	1072	3086	1091	3194	1111	3303	1130	3414	1148	3527	—	—	—	—	—	—
4600 [2171]	826	2056	849	2143	872	2232	895	2323	917	2416	939	2511	960	2608	981	2707	1002	2807	1023	2910	1043	3014	1063	3120	1082	3228	1101	3338	1120	3449	1139	3563	1157	3679	—	—	—	—	—	—
4700 [2218]	841	2172	864	2262	886	2354	908	2448	930	2543	952	2641	973	2740	994	2841	1014	2944	1034	3049	1054	3156	1074	3264	1093	3375	1112	3487	1130	3601	1148	3717	—	—	—	—	—	—	—	—
4800 [2265]	856	2294	878	2387	900	2481	922	2577	944	2675	965	2775	986	2877	1006	2980	1026	3086	1046	3193	1065	3302	1084	3414	1103	3526	1122	3641	1140	3758	1158	3877	—	—	—	—	—	—	—	—

NOTE: A/F-Drive left of the bold line, B/G-Drive right of bold lines, C/H-Drive right of double line.

Drive Package	A/F						B/G						C/H					
Motor H.P. [W]	2 [1491.4]						3 [2237.1]						3 [2237.1]					
Blower Sheave	AK79H						AK79H						AK79H					
Motor Sheave	1VL40*7/8						1VP50*7/8						1VP56*7/8					
Belt	A49						A50						A51					
Turns Open	0	1	**2**	3	4	5	0	1	2	3	4	**5**	0	1	2	3	4	**5**
RPM	826	781	**735**	689	643	591	1041	999	956	914	870	**826**	1159	1121	1080	1039	998	**955**

NOTES: 1. Factory sheave settings are shown in bold type.
2. Do not set motor sheave below minimum or maximum turns open shown.
3. Re-adjustment of sheave required to achieve rated airflow at AHRI minimum External Static Pressure
4. Add component resistance (below) to duct resistance to determine total External Static Pressure.

[ ] Designates Metric Conversions

AIRFLOW PERFORMANCE— 10 TON [35.1 kW] — 60 Hz — DOWNFLOW (con't.)

Airflow	AIRFLOW CORRECTION FACTORS *			COMPONENT AIRFLOW RESISTANCE			
				Wet Coil	Vertical Economizer RA Damper Open	Concentric Diffuser RXRN-AEF3415 & Diffuser RXMC-DD02 (Flush)	Concentric Diffuser RXRN-AED3415 & Diffuser RXMC-DD02 (Drop)
CFM [L/s]	Total MBH	Sensible MBH	Power kW	Resistance — Inches of Water [kPa]			
3200 [1510]	0.96	0.91	0.98	0.07 [.02]	0.07 [.02]	0.74 [.18]	0.56 [.14]
3300 [1557]	0.97	0.92	0.99	0.07 [.02]	0.08 [.02]	0.79 [.20]	0.59 [.15]
3400 [1604]	0.97	0.93	0.99	0.07 [.02]	0.09 [.02]	0.84 [.21]	0.62 [.15]
3500 [1652]	0.98	0.94	0.99	0.08 [.02]	0.10 [.02]	0.90 [.22]	0.66 [.16]
3600 [1699]	0.98	0.95	0.99	0.08 [.02]	0.11 [.03]	0.95 [.24]	0.69 [.17]
3700 [1746]	0.99	0.97	1.00	0.09 [.02]	0.12 [.03]	1.00 [.25]	0.73 [.18]
3800 [1793]	0.99	0.98	1.00	0.09 [.02]	0.13 [.03]	1.04 [.26]	0.76 [.19]
3900 [1840]	1.00	0.99	1.00	0.09 [.02]	0.15 [.04]	1.09 [.27]	0.80 [.20]
4000 [1888]	1.00	1.00	1.01	0.10 [.02]	0.16 [.04]	1.13 [.28]	0.84 [.21]
4100 [1935]	1.00	1.01	1.01	0.10 [.03]	0.17 [.04]	1.19 [.30]	0.88 [.22]
4200 [1982]	1.01	1.02	1.01	0.11 [.03]	0.19 [.05]	1.24 [.31]	0.92 [.23]
4300 [2029]	1.01	1.03	1.01	0.11 [.03]	0.20 [.05]	1.31 [.33]	0.97 [.24]
4400 [2076]	1.02	1.05	1.02	0.12 [.03]	0.21 [.05]	1.37 [.34]	1.02 [.25]
4500 [2123]	1.02	1.06	1.02	0.13 [.03]	0.23 [.06]	1.43 [.35]	1.07 [.27]
4600 [2171]	1.03	1.07	1.02	0.13 [.03]	0.24 [.06]	1.48 [.37]	1.11 [.28]
4700 [2218]	1.03	1.08	1.03	0.14 [.03]	0.26 [.06]	1.54 [.38]	1.15 [.29]
4800 [2265]	1.04	1.09	1.03	0.14 [.04]	0.28 [.07]	1.59 [.40]	1.19 [.30]

*Multiply correction factor times gross performance data resulting sensible capacity cannot exceed total capacity.

[ ] Designates Metric Conversions

AIRFLOW PERFORMANCE—10 TON [35.1 kW] — 60 Hz — SIDEFLOW

Air Flow CFM [L/s]	Model RHPDZ*120* Voltage 208/230, 460, 575 — 3 phase 60 Hz																																									
	External Static Pressure—Inches of Water [kPa]																																									
	0.1 [.02]		0.2 [.05]		0.3 [.07]		0.4 [.10]		0.5 [.12]		0.6 [.15]		0.7 [.17]		0.8 [.20]		0.9 [.22]		1.0 [.25]		1.1 [.27]		1.2 [.30]		1.3 [.32]		1.4 [.35]		1.5 [.37]		1.6 [.40]		1.7 [.42]		1.8 [.45]		1.9 [.47]		2.0 [.50]	
	RPM	W	RPM	W	RPM	W	RPM	W	RPM	W	RPM	W	RPM	W	RPM	W	RPM	W	RPM	W	RPM	W	RPM	W	RPM	W	RPM	W	RPM	W	RPM	W	RPM	W	RPM	W	RPM	W	RPM	W	RPM	W
3200 [1510]	—	—	620	1031	650	1078	679	1128	708	1180	736	1235	765	1291	792	1349	820	1410	847	1472	874	1537	900	1604	926	1672	951	1743	977	1817	1001	1892	1026	1969	1050	2049	1074	2130	1097	2214
3300 [1557]	603	1031	632	1079	661	1129	690	1181	719	1235	747	1292	775	1350	802	1411	829	1474	855	1538	882	1605	908	1674	933	1746	958	1819	983	1894	1007	1972	1031	2051	1055	2133	1078	2217	1101	2303
3400 [1604]	615	1081	644	1131	673	1183	702	1238	730	1294	757	1353	785	1414	812	1476	838	1541	864	1608	890	1678	915	1749	941	1822	965	1898	990	1976	1014	2055	1037	2137	1060	2221	1083	2307	1106	2395
3500 [1652]	628	1134	657	1187	685	1241	713	1298	741	1357	768	1418	795	1481	821	1546	847	1613	873	1682	899	1754	924	1827	948	1903	972	1981	996	2061	1020	2143	1043	2227	1066	2313	1088	2401	1110	2492
3600 [1699]	641	1191	669	1246	697	1303	725	1362	752	1423	779	1486	805	1551	831	1619	857	1688	882	1760	907	1834	932	1909	956	1987	980	2067	1003	2149	1026	2234	1049	2320	1071	2409	1093	2499	1115	2592
3700 [1746]	654	1252	682	1309	709	1368	737	1430	763	1493	790	1558	816	1626	841	1695	866	1767	891	1841	916	1917	940	1995	964	2075	987	2158	1010	2242	1033	2329	1055	2417	1077	2508	1099	2601	1120	2696
3800 [1793]	667	1317	695	1376	722	1438	748	1501	775	1567	801	1634	826	1704	851	1776	876	1850	901	1926	925	2004	948	2085	972	2167	995	2252	1017	2338	1040	2427	1061	2518	1083	2611	1104	2706	1125	2804
3900 [1840]	681	1386	708	1447	734	1511	760	1576	786	1644	812	1714	837	1786	862	1860	886	1937	910	2015	934	2095	957	2178	980	2263	1003	2350	1025	2439	1046	2530	1068	2623	1089	2718	1110	2815	1130	2915
4000 [1888]	694	1458	721	1521	747	1587	773	1655	798	1725	823	1798	848	1872	872	1948	896	2027	920	2108	943	2190	966	2275	988	2362	1010	2451	1032	2542	1053	2636	1074	2731	1095	2829	1115	2928	1135	3030
4100 [1935]	708	1534	734	1600	760	1668	785	1738	810	1810	835	1885	859	1961	883	2040	906	2121	930	2204	952	2289	975	2376	997	2465	1018	2557	1040	2650	1061	2746	1081	2843	1101	2943	1121	3045	1141	3149
4200 [1982]	722	1613	747	1682	773	1752	797	1825	822	1899	846	1976	870	2055	894	2136	917	2219	939	2304	962	2391	984	2481	1005	2572	1027	2666	1047	2761	1068	2859	1088	2959	1108	3061	1127	3165	1146	3272
4300 [2029]	735	1697	761	1767	786	1840	810	1915	834	1992	858	2071	881	2152	904	2235	927	2320	949	2408	971	2497	993	2589	1014	2683	1035	2779	1055	2877	1075	2977	1095	3079	1114	3183	1133	3290	1152	3398
4400 [2076]	750	1784	774	1857	799	1932	823	2009	847	2088	870	2169	893	2253	915	2338	938	2426	960	2515	981	2607	1002	2701	1023	2797	1043	2895	1063	2995	1083	3098	1102	3202	1121	3309	1140	3417	1158	3528
4500 [2123]	764	1875	788	1950	812	2027	836	2107	859	2188	882	2271	904	2357	927	2445	948	2535	970	2627	991	2721	1012	2817	1032	2915	1052	3015	1071	3118	1091	3223	1110	3329	1128	3438	1146	3549	—	—
4600 [2171]	778	1970	802	2047	826	2126	849	2208	872	2292	894	2377	916	2465	938	2555	959	2647	980	2742	1001	2838	1021	2936	1041	3037	1061	3140	1080	3244	1099	3351	1117	3460	1135	3571	1153	3685	—	—
4700 [2218]	793	2068	816	2148	839	2229	862	2313	884	2399	906	2487	928	2577	949	2670	970	2764	991	2860	1011	2959	1031	3060	1050	3163	1069	3267	1088	3374	1107	3484	1124	3595	1142	3708	1159	3824	—	—
4800 [2265]	807	2170	830	2252	853	2336	875	2422	897	2510	919	2601	940	2693	961	2788	982	2884	1002	2983	1021	3084	1041	3187	1060	3292	1078	3399	1097	3508	1115	3620	1132	3733	1149	3849	—	—	—	—

NOTE: A/F-Drive left of the bold line, B/G-Drive right of bold lines, C/H-Drive right of double line.

Drive Package	A/F						B/G						C/H					
Motor H.P. [W]	2 [1491.4]						3 [2237.1]						3 [2237.1]					
Blower Sheave	AK79H						AK79H						AK79H					
Motor Sheave	1VL40*7/8						1VP50*7/8						1VP56*7/8					
Belt	A49						A50						A51					
Turns Open	0	1	**2**	3	4	5	0	1	2	3	4	**5**	0	1	2	3	4	**5**
RPM	817	773	**731**	685	641	594	1038	996	954	912	866	**824**	1152	1117	1077	1035	994	**950**

NOTES: 1. Factory sheave settings are shown in bold type.
2. Do not set motor sheave below minimum or maximum turns open shown.
3. Re-adjustment of sheave required to achieve rated airflow at AHRI minimum External Static Pressure
4. Add component resistance (below) to duct resistance to determine total External Static Pressure.

[ ] Designates Metric Conversions

AIRFLOW PERFORMANCE— 10 TON [35.1 kW] — 60 Hz — SIDEFLOW (con't.)

Airflow	AIRFLOW CORRECTION FACTORS *			COMPONENT AIRFLOW RESISTANCE			
				Wet Coil	Horizontal Economizer RA Damper Open	Concentric Diffuser RXRN-AEF3415 & Diffuser RXMC-DD02 (Flush)	Concentric Diffuser RXRN-AED3415 & Diffuser RXMC-DD02 (Drop)
CFM [L/s]	Total MBH	Sensible MBH	Power kW	Resistance — Inches of Water [kPa]			
3200 [1510]	0.96	0.91	0.98	0.07 [.02]	0.07 [.02]	0.74 [.18]	0.56 [.14]
3300 [1557]	0.97	0.92	0.99	0.07 [.02]	0.08 [.02]	0.79 [.20]	0.59 [.15]
3400 [1604]	0.97	0.93	0.99	0.07 [.02]	0.09 [.02]	0.84 [.21]	0.62 [.15]
3500 [1652]	0.98	0.94	0.99	0.08 [.02]	0.10 [.02]	0.90 [.22]	0.66 [.16]
3600 [1699]	0.98	0.95	0.99	0.08 [.02]	0.11 [.03]	0.95 [.24]	0.69 [.17]
3700 [1746]	0.99	0.97	1.00	0.09 [.02]	0.12 [.03]	1.00 [.25]	0.73 [.18]
3800 [1793]	0.99	0.98	1.00	0.09 [.02]	0.13 [.03]	1.04 [.26]	0.76 [.19]
3900 [1840]	1.00	0.99	1.00	0.09 [.02]	0.15 [.04]	1.09 [.27]	0.80 [.20]
4000 [1888]	1.00	1.00	1.01	0.10 [.02]	0.16 [.04]	1.13 [.28]	0.84 [.21]
4100 [1935]	1.00	1.01	1.01	0.10 [.03]	0.17 [.04]	1.19 [.30]	0.88 [.22]
4200 [1982]	1.01	1.02	1.01	0.11 [.03]	0.19 [.05]	1.24 [.31]	0.92 [.23]
4300 [2029]	1.01	1.03	1.01	0.11 [.03]	0.20 [.05]	1.31 [.33]	0.97 [.24]
4400 [2076]	1.02	1.05	1.02	0.12 [.03]	0.21 [.05]	1.37 [.34]	1.02 [.25]
4500 [2123]	1.02	1.06	1.02	0.13 [.03]	0.23 [.06]	1.43 [.35]	1.07 [.27]
4600 [2171]	1.03	1.07	1.02	0.13 [.03]	0.24 [.06]	1.48 [.37]	1.11 [.28]
4700 [2218]	1.03	1.08	1.03	0.14 [.03]	0.26 [.06]	1.54 [.38]	1.15 [.29]
4800 [2265]	1.04	1.09	1.03	0.14 [.04]	0.28 [.07]	1.59 [.40]	1.19 [.30]

*Multiply correction factor times gross performance data resulting sensible capacity cannot exceed total capacity.

[ ] Designates Metric Conversions

ELECTRICAL DATA – RHPDZS SERIES

		090ACA								
Unit Information	Unit Operating Voltage Range	187-253								
	Volts	208/230								
	Phase	3								
	Hz	60								
	Minimum Circuit Ampacity	44								
	Minimum Overcurrent Protection Device Size	50								
	Maximum Overcurrent Protection Device Size	60								
Compressor Motor	No.	1								
	Volts	200/230								
	Phase	3								
	RPM	3450								
	HP, Compressor 1	7								
	Amps (RLA), Comp. 1	25.3								
	Amps (LRA), Comp. 1	184								
	HP, Compressor 2									
	Amps (RLA), Comp. 2									
	Amps (LRA), Comp. 2									
Condenser Motor	No.	2								
	Volts	208/230								
	Phase	1								
	HP	1/2								
	Amps (FLA, each)	2.5								
	Amps (LRA, each)	5.6								
Evaporator Fan	No.	1								
	Volts	208/230								
	Phase	3								
	HP	2								
	Amps (FLA, each)	6.6								
	Amps (LRA, each)	45								

ELECTRICAL DATA – RHPDZS SERIES

		090ACB	090ACC	090ACF	090ACG	090ACH	090ADA	090ADB	090ADC	090ADF
Unit Information	Unit Operating Voltage Range	187-253	187-253	187-253	187-253	187-253	414-506	414-506	414-506	414-506
	Volts	208/230	208/230	208/230	208/230	208/230	460	460	460	460
	Phase	3	3	3	3	3	3	3	3	3
	Hz	60	60	60	60	60	60	60	60	60
	Minimum Circuit Ampacity	46	46	44	46	46	19	20	20	19
	Minimum Overcurrent Protection Device Size	60	60	50	60	60	25	25	25	25
	Maximum Overcurrent Protection Device Size	70	70	60	70	70	25	25	25	25
Compressor Motor	No.	1	1	1	1	1	1	1	1	1
	Volts	200/230	200/230	200/230	200/230	200/230	460	460	460	460
	Phase	3	3	3	3	3	3	3	3	3
	RPM	3450	3450	3450	3450	3450	3450	3450	3450	3450
	HP, Compressor 1	7	7	7	7	7	7	7	7	7
	Amps (RLA), Comp. 1	25.3	25.3	25.3	25.3	25.3	9.6	9.6	9.6	9.6
	Amps (LRA), Comp. 1	184	184	184	184	184	84	84	84	84
	HP, Compressor 2									
	Amps (RLA), Comp. 2									
	Amps (LRA), Comp. 2									
Condenser Motor	No.	2	2	2	2	2	2	2	2	2
	Volts	208/230	208/230	208/230	208/230	208/230	460	460	460	460
	Phase	1	1	1	1	1	1	1	1	1
	HP	1/2	1/2	1/2	1/2	1/2	1/2	1/2	1/2	1/2
	Amps (FLA, each)	2.5	2.5	2.5	2.5	2.5	1.5	1.5	1.5	1.5
	Amps (LRA, each)	5.6	5.6	5.6	5.6	5.6	3.1	3.1	3.1	3.1
Evaporator Fan	No.	1	1	1	1	1	1	1	1	1
	Volts	208/230	208/230	208/230	208/230	208/230	460	460	460	460
	Phase	3	3	3	3	3	3	3	3	3
	HP	3	3	2	3	3	2	3	3	2
	Amps (FLA, each)	9.1	9.1	6.6	9.1	9.1	3.2	4.6	4.6	3.2
	Amps (LRA, each)	74.5	74.5	45	74.5	74.5	45	38.1	38.1	45

ELECTRICAL DATA – RHPDZS SERIES

		090ADG	090ADH	090AYA	090AYB	090AYC	102ACA
Unit Information	Unit Operating Voltage Range	414-506	414-506	517-632	517-632	517-632	187-253
	Volts	460	460	575	575	575	208/230
	Phase	3	3	3	3	3	3
	Hz	60	60	60	60	60	60
	Minimum Circuit Ampacity	20	20	14	15	15	48
	Minimum Overcurrent Protection Device Size	25	25	20	20	20	60
	Maximum Overcurrent Protection Device Size	25	25	20	20	20	70
Compressor Motor	No.	1	1	1	1	1	1
	Volts	460	460	575	575	575	200/230
	Phase	3	3	3	3	3	3
	RPM	3450	3450	3450	3450	3450	3450
	HP, Compressor 1	7	7	7	7	7	7 1/2
	Amps (RLA), Comp. 1	9.6	9.6	7.1	7.1	7.1	28.8
	Amps (LRA), Comp. 1	84	84	60	60	60	191
	HP, Compressor 2						
	Amps (RLA), Comp. 2						
	Amps (LRA), Comp. 2						
Condenser Motor	No.	2	2	2	2	2	2
	Volts	460	460	575	575	575	208/230
	Phase	1	1	1	1	1	1
	HP	1/2	1/2	1/2	1/2	1/2	1/2
	Amps (FLA, each)	1.5	1.5	1.1	1.1	1.1	2.5
	Amps (LRA, each)	3.1	3.1	1.5	1.5	1.5	5.6
Evaporator Fan	No.	1	1	1	1	1	1
	Volts	460	460	575	575	575	208/230
	Phase	3	3	3	3	3	3
	HP	3	3	2	3	3	2
	Amps (FLA, each)	4.6	4.6	2.5	3.5	3.5	7
	Amps (LRA, each)	38.1	38.1	19	20	20	45

ELECTRICAL DATA – RHPDZS SERIES

		102ACB	102ACC	102ACF	102ACG	102ACH	102ADA	102ADB	102ADC	102ADF
Unit Information	Unit Operating Voltage Range	187-253	187-253	187-253	187-253	187-253	414-506	414-506	414-506	414-506
	Volts	208/230	208/230	208/230	208/230	208/230	460	460	460	460
	Phase	3	3	3	3	3	3	3	3	3
	Hz	60	60	60	60	60	60	60	60	60
	Minimum Circuit Ampacity	50	53	48	50	53	23	24	25	23
	Minimum Overcurrent Protection Device Size	60	70	60	60	70	30	30	30	30
	Maximum Overcurrent Protection Device Size	70	80	70	70	80	30	35	35	30
Compressor Motor	No.	1	1	1	1	1	1	1	1	1
	Volts	200/230	200/230	200/230	200/230	200/230	460	460	460	460
	Phase	3	3	3	3	3	3	3	3	3
	RPM	3450	3450	3450	3450	3450	3450	3450	3450	3450
	HP, Compressor 1	7 1/2	7 1/2	7 1/2	7 1/2	7 1/2	7 1/2	7 1/2	7 1/2	7 1/2
	Amps (RLA), Comp. 1	28.8	28.8	28.8	28.8	28.8	12.5	12.5	12.5	12.5
	Amps (LRA), Comp. 1	191	191	191	191	191	100	100	100	100
	HP, Compressor 2									
	Amps (RLA), Comp. 2									
	Amps (LRA), Comp. 2									
Condenser Motor	No.	2	2	2	2	2	2	2	2	2
	Volts	208/230	208/230	208/230	208/230	208/230	460	460	460	460
	Phase	1	1	1	1	1	1	1	1	1
	HP	1/2	1/2	1/2	1/2	1/2	1/2	1/2	1/2	1/2
	Amps (FLA, each)	2.5	2.5	2.5	2.5	2.5	1.5	1.5	1.5	1.5
	Amps (LRA, each)	5.6	5.6	5.6	5.6	5.6	3.1	3.1	3.1	3.1
Evaporator Fan	No.	1	1	1	1	1	1	1	1	1
	Volts	208/230	208/230	208/230	208/230	208/230	460	460	460	460
	Phase	3	3	3	3	3	3	3	3	3
	HP	3	3	2	3	3	2	3	3	2
	Amps (FLA, each)	8.9	12	7	8.9	12	3.5	4.4	6	3.5
	Amps (LRA, each)	74.5	74.5	45	74.5	74.5	22.5	38.1	38.1	22.5

ELECTRICAL DATA – RHPDZS SERIES

		102ADG	102ADH	102AYA	102AYB	102AYC	120ACA
Unit Information	Unit Operating Voltage Range	414-506	414-506	517-632	517-632	517-632	187-253
	Volts	460	460	575	575	575	208/230
	Phase	3	3	3	3	3	3
	Hz	60	60	60	60	60	60
	Minimum Circuit Ampacity	24	25	17	18	18	54
	Minimum Overcurrent Protection Device Size	30	30	20	25	25	70
	Maximum Overcurrent Protection Device Size	35	35	25	25	25	80
Compressor Motor	No.	1	1	1	1	1	1
	Volts	460	460	575	575	575	200/230
	Phase	3	3	3	3	3	3
	RPM	3450	3450	3450	3450	3450	3450
	HP, Compressor 1	7 1/2	7 1/2	7 1/2	7 1/2	7 1/2	10
	Amps (RLA), Comp. 1	12.5	12.5	9.7	9.7	9.7	32.6
	Amps (LRA), Comp. 1	100	100	70	70	70	240
	HP, Compressor 2						
	Amps (RLA), Comp. 2						
	Amps (LRA), Comp. 2						
Condenser Motor	No.	2	2	2	2	2	2
	Volts	460	460	575	575	575	208/230
	Phase	1	1	1	1	1	1
	HP	1/2	1/2	1/2	1/2	1/2	1/2
	Amps (FLA, each)	1.5	1.5	1.1	1.1	1.1	2.5
	Amps (LRA, each)	3.1	3.1	1.5	1.5	1.5	5.6
Evaporator Fan	No.	1	1	1	1	1	1
	Volts	460	460	575	575	575	208/230
	Phase	3	3	3	3	3	3
	HP	3	3	2	3	3	2
	Amps (FLA, each)	4.4	6	2.5	3.5	3.5	7.7
	Amps (LRA, each)	38.1	38.1	19	20	20	45

ELECTRICAL DATA – RHPDZS SERIES

		120ACB	120ACC	120ACF	120ACG	120ACH	120ADA	120ADB	120ADC	120ADF
Unit Information	Unit Operating Voltage Range	187-253	187-253	187-253	187-253	187-253	414-506	414-506	414-506	414-506
	Volts	208/230	208/230	208/230	208/230	208/230	460	460	460	460
	Phase	3	3	3	3	3	3	3	3	3
	Hz	60	60	60	60	60	60	60	60	60
	Minimum Circuit Ampacity	57	58	54	57	58	26	27	28	26
	Minimum Overcurrent Protection Device Size	70	70	70	70	70	30	35	35	30
	Maximum Overcurrent Protection Device Size	80	90	80	80	90	40	40	40	40
Compressor Motor	No.	1	1	1	1	1	1	1	1	1
	Volts	200/230	200/230	200/230	200/230	200/230	460	460	460	460
	Phase	3	3	3	3	3	3	3	3	3
	RPM	3450	3450	3450	3450	3450	3450	3450	3450	3450
	HP, Compressor 1	10	10	10	10	10	10	10	10	10
	Amps (RLA), Comp. 1	32.6	32.6	32.6	32.6	32.6	14.8	14.8	14.8	14.8
	Amps (LRA), Comp. 1	240	240	240	240	240	130	130	130	130
	HP, Compressor 2									
	Amps (RLA), Comp. 2									
	Amps (LRA), Comp. 2									
Condenser Motor	No.	2	2	2	2	2	2	2	2	2
	Volts	208/230	208/230	208/230	208/230	208/230	460	460	460	460
	Phase	1	1	1	1	1	1	1	1	1
	HP	1/2	1/2	1/2	1/2	1/2	1/2	1/2	1/2	1/2
	Amps (FLA, each)	2.5	2.5	2.5	2.5	2.5	1.5	1.5	1.5	1.5
	Amps (LRA, each)	5.6	5.6	5.6	5.6	5.6	3.1	3.1	3.1	3.1
Evaporator Fan	No.	1	1	1	1	1	1	1	1	1
	Volts	208/230	208/230	208/230	208/230	208/230	460	460	460	460
	Phase	3	3	3	3	3	3	3	3	3
	HP	3	3	2	3	3	2	3	3	2
	Amps (FLA, each)	10.4	12	7.7	10.4	12	3.9	5.2	6	3.9
	Amps (LRA, each)	74.5	74.5	45	74.5	74.5	23.5	38.1	38.1	23.5

ELECTRICAL DATA – RHPDZS SERIES

		120ADG	120ADH	120AYA	120AYB	120AYC
Unit Information	Unit Operating Voltage Range	414-506	414-506	517-632	517-632	517-632
	Volts	460	460	575	575	575
	Phase	3	3	3	3	3
	Hz	60	60	60	60	60
	Minimum Circuit Ampacity	27	28	19	20	20
	Minimum Overcurrent Protection Device Size	35	35	25	25	25
	Maximum Overcurrent Protection Device Size	40	40	25	30	30
Compressor Motor	No.	1	1	1	1	1
	Volts	460	460	575	575	575
	Phase	3	3	3	3	3
	RPM	3450	3450	3450	3450	3450
	HP, Compressor 1	10	10	10	10	10
	Amps (RLA), Comp. 1	14.8	14.8	11.1	11.1	11.1
	Amps (LRA), Comp. 1	130	130	93.7	93.7	93.7
	HP, Compressor 2					
	Amps (RLA), Comp. 2					
	Amps (LRA), Comp. 2					
Condenser Motor	No.	2	2	2	2	2
	Volts	460	460	575	575	575
	Phase	1	1	1	1	1
	HP	1/2	1/2	1/2	1/2	1/2
	Amps (FLA, each)	1.5	1.5	1.1	1.1	1.1
	Amps (LRA, each)	3.1	3.1	1.5	1.5	1.5
Evaporator Fan	No.	1	1	1	1	1
	Volts	460	460	575	575	575
	Phase	3	3	3	3	3
	HP	3	3	2	3	3
	Amps (FLA, each)	5.2	6	2.5	3.5	3.5
	Amps (LRA, each)	38.1	38.1	19	20	20

ELECTRICAL DATA – RHPDZT SERIES

		090ACF	090ACG	090ACH	090ADF	090ADG	090ADH
Unit Information	Unit Operating Voltage Range	187-253	187-253	187-253	414-506	414-506	414-506
	Volts	208/230	208/230	208/230	460	460	460
	Phase	3	3	3	3	3	3
	Hz	60	60	60	60	60	60
	Minimum Circuit Ampacity	44	46	46	19	20	20
	Minimum Overcurrent Protection Device Size	50	60	60	25	25	25
	Maximum Overcurrent Protection Device Size	60	70	70	25	25	25
Compressor Motor	No.	1	1	1	1	1	1
	Volts	200/230	200/230	200/230	460	460	460
	Phase	3	3	3	3	3	3
	RPM	3450	3450	3450	3450	3450	3450
	HP, Compressor 1	7	7	7	7	7	7
	Amps (RLA), Comp. 1	25.3	25.3	25.3	9.6	9.6	9.6
	Amps (LRA), Comp. 1	184	184	184	84	84	84
	HP, Compressor 2						
	Amps (RLA), Comp. 2						
	Amps (LRA), Comp. 2						
Condenser Motor	No.	2	2	2	2	2	2
	Volts	208/230	208/230	208/230	460	460	460
	Phase	1	1	1	1	1	1
	HP	1/2	1/2	1/2	1/2	1/2	1/2
	Amps (FLA, each)	2.5	2.5	2.5	1.5	1.5	1.5
	Amps (LRA, each)	5.6	5.6	5.6	3.1	3.1	3.1
Evaporator Fan	No.	1	1	1	1	1	1
	Volts	208/230	208/230	208/230	460	460	460
	Phase	3	3	3	3	3	3
	HP	2	3	3	2	3	3
	Amps (FLA, each)	6.6	9.1	9.1	3.2	4.6	4.6
	Amps (LRA, each)	45	74.5	74.5	45	38.1	38.1

ELECTRICAL DATA – RHPDZT SERIES

		102ACF	102ACG	102ACH	102ADF	102ADG	102ADH
Unit Information	Unit Operating Voltage Range	187-253	187-253	187-253	414-506	414-506	414-506
	Volts	208/230	208/230	208/230	460	460	460
	Phase	3	3	3	3	3	3
	Hz	60	60	60	60	60	60
	Minimum Circuit Ampacity	48	50	53	23	24	25
	Minimum Overcurrent Protection Device Size	60	60	70	30	30	30
	Maximum Overcurrent Protection Device Size	70	70	80	30	35	35
Compressor Motor	No.	1	1	1	1	1	1
	Volts	200/230	200/230	200/230	460	460	460
	Phase	3	3	3	3	3	3
	RPM	3450	3450	3450	3450	3450	3450
	HP, Compressor 1	7 1/2	7 1/2	7 1/2	7 1/2	7 1/2	7 1/2
	Amps (RLA), Comp. 1	28.8	28.8	28.8	12.5	12.5	12.5
	Amps (LRA), Comp. 1	191	191	191	100	100	100
	HP, Compressor 2						
	Amps (RLA), Comp. 2						
	Amps (LRA), Comp. 2						
Condenser Motor	No.	2	2	2	2	2	2
	Volts	208/230	208/230	208/230	460	460	460
	Phase	1	1	1	1	1	1
	HP	1/2	1/2	1/2	1/2	1/2	1/2
	Amps (FLA, each)	2.5	2.5	2.5	1.5	1.5	1.5
	Amps (LRA, each)	5.6	5.6	5.6	3.1	3.1	3.1
Evaporator Fan	No.	1	1	1	1	1	1
	Volts	208/230	208/230	208/230	460	460	460
	Phase	3	3	3	3	3	3
	HP	2	3	3	2	3	3
	Amps (FLA, each)	7	8.9	12	3.5	4.4	6
	Amps (LRA, each)	45	74.5	74.5	22.5	38.1	38.1

ELECTRICAL DATA – RHPDZT SERIES

		120ACF	120ACG	120ACH	120ADF	120ADG	120ADH
Unit Information	Unit Operating Voltage Range	187-253	187-253	187-253	414-506	414-506	414-506
	Volts	20/208	208/230	208/230	460	460	460
	Phase	3	3	3	3	3	3
	Hz	60	60	60	60	60	60
	Minimum Circuit Ampacity	54	57	58	26	27	28
	Minimum Overcurrent Protection Device Size	70	70	70	30	35	35
	Maximum Overcurrent Protection Device Size	80	80	90	40	40	40
Compressor Motor	No.	1	1	1	1	1	1
	Volts	200/230	200/230	200/230	460	460	460
	Phase	3	3	3	3	3	3
	RPM	3450	3450	3450	3450	3450	3450
	HP, Compressor 1	10	10	10	10	10	10
	Amps (RLA), Comp. 1	32.6	32.6	32.6	14.8	14.8	14.8
	Amps (LRA), Comp. 1	240	240	240	130	130	130
	HP, Compressor 2						
	Amps (RLA), Comp. 2						
	Amps (LRA), Comp. 2						
Condenser Motor	No.	2	2	2	2	2	2
	Volts	208/230	208/230	208/230	460	460	460
	Phase	1	1	1	1	1	1
	HP	1/2	1/2	1/2	1/2	1/2	1/2
	Amps (FLA, each)	2.5	2.5	2.5	1.5	1.5	1.5
	Amps (LRA, each)	5.6	5.6	5.6	3.1	3.1	3.1
Evaporator Fan	No.	1	1	1	1	1	1
	Volts	208/230	208/230	208/230	460	460	460
	Phase	3	3	3	3	3	3
	HP	2	3	3	2	3	3
	Amps (FLA, each)	7.7	10.4	12	3.9	5.2	6
	Amps (LRA, each)	45	74.5	74.5	23.5	38.1	38.1

208/240 VOLT, THREE PHASE, 60 Hz, AUXILIARY ELECTRIC HEATER KITS CHARACTERISTICS AND APPLICATION

Unit Model No. RHPDZ-	Single Power Supply for Both Unit and Heater Kit								Separate Power Supply for Both Unit and Heater Kit				
	Heater Kit					Heat Pump			Heater Kit		Heat Pump		
	RXJJ- Heater Kit Nominal kW	No. of Sequence Steps	Rated Heater kW @ 208/240 V	Heater KBTU/Hr @ 208/240 V	Heater Amp. @ 208/240 V	Unit Min. Ckt. Ampacity @ 208-240 V	Over Current Protective Device Size Min./Max. @ 208 V	Over Current Protective Device Size Min./Max. @ 240 V	Min. Ckt. Ampacity 208/240 V	Max. Fuse Size 208/240 V	Min. Circuit Ampacity 208/240 V	Over Current Protective Device Size Min./Max. @ 208 V	Over Current Protective Device Size Min./Max. @ 240 V
RHPDZS090ACA	No Heat	—	—	—	—	44/44	50/60	50/60	—	—	44/44	50/60	50/60
	DD10CP	1	7.4/9.9	25.25/33.78	20.6/23.8	69/73	80/80	80/90	26/30	30/30	44/44	50/60	50/60
	DD15CP	1	10.8/14.4	36.85/49.13	30.0/34.6	81/87	90/90	90/100	38/44	40/45	44/44	50/60	50/60
	DD20CP	2	14.9/19.8	50.84/67.56	41.3/47.6	95/103	100/100	110/110	52/60	60/60	44/44	50/60	50/60
	DD30CP	2	21.6/28.8	73.70/98.27	60.0/69.3	119/130	125/125	150/150	75/87	80/90	44/44	50/60	50/60
	DD40CP	2	29.7/39.6	101.34/135.12	82.5/95.2	147/163	150/150	175/175	104/119	110/125	44/44	50/60	50/60
RHPDZS090ACB	No Heat	—	—	—	—	46/46	60/70	60/70	—	—	46/46	60/70	60/70
	DD10CP	1	7.4/9.9	25.25/33.78	20.6/23.8	72/76	80/90	80/90	26/30	30/30	46/46	60/70	60/70
	DD15CP	1	10.8/14.4	36.85/49.13	30.0/34.6	84/89	90/100	100/100	38/44	40/45	46/46	60/70	60/70
	DD20CP	2	14.9/19.8	50.84/67.56	41.3/47.6	98/106	110/110	110/110	52/60	60/60	46/46	60/70	60/70
	DD30CP	2	21.6/28.8	73.70/98.27	60.0/69.3	121/133	125/125	150/150	75/87	80/90	46/46	60/70	60/70
	DD40CP	2	29.7/39.6	101.34/135.12	82.5/95.2	149/165	175/175	175/175	104/119	110/125	46/46	60/70	60/70
RHPDZS090ACC	No Heat	—	—	—	—	46/46	60/70	60/70	—	—	46/46	60/70	60/70
	DD10CP	1	7.4/9.9	25.25/33.78	20.6/23.8	72/76	80/90	80/90	26/30	30/30	46/46	60/70	60/70
	DD15CP	1	10.8/14.4	36.85/49.13	30.0/34.6	84/89	90/100	100/100	38/44	40/45	46/46	60/70	60/70
	DD20CP	2	14.9/19.8	50.84/67.56	41.3/47.6	98/106	110/110	110/110	52/60	60/60	46/46	60/70	60/70
	DD30CP	2	21.6/28.8	73.70/98.27	60.0/69.3	121/133	125/125	150/150	75/87	80/90	46/46	60/70	60/70
	DD40CP	2	29.7/39.6	101.34/135.12	82.5/95.2	149/165	175/175	175/175	104/119	110/125	46/46	60/70	60/70
RHPDZS090ACF	No Heat	—	—	—	—	44/44	50/60	50/60	—	—	44/44	50/60	50/60
	DD10CP	1	7.4/9.9	25.25/33.78	20.6/23.8	69/73	80/80	80/90	26/30	30/30	44/44	50/60	50/60
	DD15CP	1	10.8/14.4	36.85/49.13	30.0/34.6	81/87	90/90	90/100	38/44	40/45	44/44	50/60	50/60
	DD20CP	2	14.9/19.8	50.84/67.56	41.3/47.6	95/103	100/100	110/110	52/60	60/60	44/44	50/60	50/60
	DD30CP	2	21.6/28.8	73.70/98.27	60.0/69.3	119/130	125/125	150/150	75/87	80/90	44/44	50/60	50/60
	DD40CP	2	29.7/39.6	101.34/135.12	82.5/95.2	147/163	150/150	175/175	104/119	110/125	44/44	50/60	50/60
RHPDZS090ACG	No Heat	—	—	—	—	46/46	60/70	60/70	—	—	46/46	60/70	60/70
	DD10CP	1	7.4/9.9	25.25/33.78	20.6/23.8	72/76	80/90	80/90	26/30	30/30	46/46	60/70	60/70
	DD15CP	1	10.8/14.4	36.85/49.13	30.0/34.6	84/89	90/100	100/100	38/44	40/45	46/46	60/70	60/70
	DD20CP	2	14.9/19.8	50.84/67.56	41.3/47.6	98/106	110/110	110/110	52/60	60/60	46/46	60/70	60/70
	DD30CP	2	21.6/28.8	73.70/98.27	60.0/69.3	121/133	125/125	150/150	75/87	80/90	46/46	60/70	60/70
	DD40CP	2	29.7/39.6	101.34/135.12	82.5/95.2	149/165	175/175	175/175	104/119	110/125	46/46	60/70	60/70
RHPDZS090ACH	No Heat	—	—	—	—	46/46	60/70	60/70	—	—	46/46	60/70	60/70
	DD10CP	1	7.4/9.9	25.25/33.78	20.6/23.8	72/76	80/90	80/90	26/30	30/30	46/46	60/70	60/70
	DD15CP	1	10.8/14.4	36.85/49.13	30.0/34.6	84/89	90/100	100/100	38/44	40/45	46/46	60/70	60/70
	DD20CP	2	14.9/19.8	50.84/67.56	41.3/47.6	98/106	110/110	110/110	52/60	60/60	46/46	60/70	60/70
	DD30CP	2	21.6/28.8	73.70/98.27	60.0/69.3	121/133	125/125	150/150	75/87	80/90	46/46	60/70	60/70
	DD40CP	2	29.7/39.6	101.34/135.12	82.5/95.2	149/165	175/175	175/175	104/119	110/125	46/46	60/70	60/70

*= For Canadian use only. Uses “P” fuses for inductive circuit.
+ = Field installed only.

208/240 VOLT, THREE PHASE, 60 Hz, AUXILIARY ELECTRIC HEATER KITS CHARACTERISTICS AND APPLICATION

Unit Model No. RHPDZ-	Single Power Supply for Both Unit and Heater Kit								Separate Power Supply for Both Unit and Heater Kit				
	Heater Kit					Heat Pump			Heater Kit		Heat Pump		
	RXJJ- Heater Kit Nominal kW	No. of Sequence Steps	Rated Heater kW @ 208/240 V	Heater KBTU/Hr @ 208/240 V	Heater Amp. @ 208/240 V	Unit Min. Ckt. Ampacity @ 208-240 V	Over Current Protective Device Size Min./Max. @ 208 V	Over Current Protective Device Size Min./Max. @ 240 V	Min. Ckt. Ampacity 208/240 V	Max. Fuse Size 208/240 V	Min. Circuit Ampacity 208/240 V	Over Current Protective Device Size Min./Max. @ 208 V	Over Current Protective Device Size Min./Max. @ 240 V
RHPDZS102ACA	No Heat	—	—	—	—	48/48	60/70	60/70	—	—	48/48	60/70	60/70
	DD10CP	1	7.4/9.9	25.25/33.78	20.6/23.8	74/78	80/90	90/100	26/30	30/30	48/48	60/70	60/70
	DD15CP	1	10.8/14.4	36.85/49.13	30.0/34.6	86/92	90/100	100/110	38/44	40/45	48/48	60/70	60/70
	DD20CP	2	14.9/19.8	50.84/67.56	41.3/47.6	100/108	110/110	125/125	52/60	60/60	48/48	60/70	60/70
	DD30CP	2	21.6/28.8	73.70/98.27	60.0/69.3	123/135	150/150	150/150	75/87	80/90	48/48	60/70	60/70
	DD40CP	2	29.7/39.6	101.34/135.12	82.5/95.2	152/167	175/175	175/175	104/119	110/125	48/48	60/70	60/70
RHPDZS102ACB	No Heat	—	—	—	—	50/50	60/70	60/70	—	—	50/50	60/70	60/70
	DD10CP	1	7.4/9.9	25.25/33.78	20.6/23.8	76/80	80/90	90/100	26/30	30/30	50/50	60/70	60/70
	DD15CP	1	10.8/14.4	36.85/49.13	30.0/34.6	88/94	100/100	100/110	38/44	40/45	50/50	60/70	60/70
	DD20CP	2	14.9/19.8	50.84/67.56	41.3/47.6	102/110	110/110	125/125	52/60	60/60	50/50	60/70	60/70
	DD30CP	2	21.6/28.8	73.70/98.27	60.0/69.3	125/137	150/150	150/150	75/87	80/90	50/50	60/70	60/70
	DD40CP	2	29.7/39.6	101.34/135.12	82.5/95.2	154/169	175/175	175/175	104/119	110/125	50/50	60/70	60/70
RHPDZS102ACC	No Heat	—	—	—	—	53/53	70/80	70/80	—	—	53/53	70/80	70/80
	DD10CP	1	7.4/9.9	25.25/33.78	20.6/23.8	79/83	90/100	90/100	26/30	30/30	53/53	70/80	70/80
	DD15CP	1	10.8/14.4	36.85/49.13	30.0/34.6	91/97	100/110	110/110	38/44	40/45	53/53	70/80	70/80
	DD20CP	2	14.9/19.8	50.84/67.56	41.3/47.6	105/113	110/110	125/125	52/60	60/60	53/53	70/80	70/80
	DD30CP	2	21.6/28.8	73.70/98.27	60.0/69.3	128/140	150/150	150/150	75/87	80/90	53/53	70/80	70/80
	DD40CP	2	29.7/39.6	101.34/135.12	82.5/95.2	157/172	175/175	200/200	104/119	110/125	53/53	70/80	70/80
RHPDZS102ACF	No Heat	—	—	—	—	48/48	60/70	60/70	—	—	48/48	60/70	60/70
	DD10CP	1	7.4/9.9	25.25/33.78	20.6/23.8	74/78	80/90	90/100	26/30	30/30	48/48	60/70	60/70
	DD15CP	1	10.8/14.4	36.85/49.13	30.0/34.6	86/92	90/100	100/110	38/44	40/45	48/48	60/70	60/70
	DD20CP	2	14.9/19.8	50.84/67.56	41.3/47.6	100/108	110/110	125/125	52/60	60/60	48/48	60/70	60/70
	DD30CP	2	21.6/28.8	73.70/98.27	60.0/69.3	123/135	150/150	150/150	75/87	80/90	48/48	60/70	60/70
	DD40CP	2	29.7/39.6	101.34/135.12	82.5/95.2	152/167	175/175	175/175	104/119	110/125	48/48	60/70	60/70
RHPDZS102ACG	No Heat	—	—	—	—	50/50	60/70	60/70	—	—	50/50	60/70	60/70
	DD10CP	1	7.4/9.9	25.25/33.78	20.6/23.8	76/80	80/90	90/100	26/30	30/30	50/50	60/70	60/70
	DD15CP	1	10.8/14.4	36.85/49.13	30.0/34.6	88/94	100/100	100/110	38/44	40/45	50/50	60/70	60/70
	DD20CP	2	14.9/19.8	50.84/67.56	41.3/47.6	102/110	110/110	125/125	52/60	60/60	50/50	60/70	60/70
	DD30CP	2	21.6/28.8	73.70/98.27	60.0/69.3	125/137	150/150	150/150	75/87	80/90	50/50	60/70	60/70
	DD40CP	2	29.7/39.6	101.34/135.12	82.5/95.2	154/169	175/175	175/175	104/119	110/125	50/50	60/70	60/70
RHPDZS102ACH	No Heat	—	—	—	—	53/53	70/80	70/80	—	—	53/53	70/80	70/80
	DD10CP	1	7.4/9.9	25.25/33.78	20.6/23.8	79/83	90/100	90/100	26/30	30/30	53/53	70/80	70/80
	DD15CP	1	10.8/14.4	36.85/49.13	30.0/34.6	91/97	100/110	110/110	38/44	40/45	53/53	70/80	70/80
	DD20CP	2	14.9/19.8	50.84/67.56	41.3/47.6	105/113	110/110	125/125	52/60	60/60	53/53	70/80	70/80
	DD30CP	2	21.6/28.8	73.70/98.27	60.0/69.3	128/140	150/150	150/150	75/87	80/90	53/53	70/80	70/80
	DD40CP	2	29.7/39.6	101.34/135.12	82.5/95.2	157/172	175/175	200/200	104/119	110/125	53/53	70/80	70/80

*= For Canadian use only. Uses "P" fuses for inductive circuit.
+ = Field installed only.

208/240 VOLT, THREE PHASE, 60 Hz, AUXILIARY ELECTRIC HEATER KITS CHARACTERISTICS AND APPLICATION

Unit Model No. RHPDZ-	Single Power Supply for Both Unit and Heater Kit								Separate Power Supply for Both Unit and Heater Kit				
	Heater Kit					Heat Pump			Heater Kit		Heat Pump		
	RXJJ- Heater Kit Nominal kW	No. of Sequence Steps	Rated Heater kW @ 208/240 V	Heater KBTU/Hr @ 208/240 V	Heater Amp. @ 208/240 V	Unit Min. Ckt. Ampacity @ 208-240 V	Over Current Protective Device Size Min./Max. @ 208 V	Over Current Protective Device Size Min./Max. @ 240 V	Min. Ckt. Ampacity 208/240 V	Max. Fuse Size 208/240 V	Min. Circuit Ampacity 208/240 V	Over Current Protective Device Size Min./Max. @ 208 V	Over Current Protective Device Size Min./Max. @ 240 V
RHPDZS120ACA	No Heat	—	—	—	—	54/54	70/80	70/80	—	—	54/54	70/80	70/80
	DD10CP	1	7.4/9.9	25.25/33.78	20.6/23.8	80/84	90/100	90/100	26/30	30/30	54/54	70/80	70/80
	DD15CP	1	10.8/14.4	36.85/49.13	30.0/34.6	91/97	100/110	100/110	38/44	40/45	54/54	70/80	70/80
	DD20CP	2	14.9/19.8	50.84/67.56	41.3/47.6	106/113	110/125	125/125	52/60	60/60	54/54	70/80	70/80
	DD30CP	2	21.6/28.8	73.70/98.27	60.0/69.3	129/141	150/150	150/150	75/87	80/90	54/54	70/80	70/80
	DD40CP	2	29.7/39.6	101.34/135.12	82.5/95.2	157/173	175/175	200/200	104/119	110/125	54/54	70/80	70/80
RHPDZS120ACB	No Heat	—	—	—	—	57/57	70/80	70/80	—	—	57/57	70/80	70/80
	DD10CP	1	7.4/9.9	25.25/33.78	20.6/23.8	82/86	90/100	90/110	26/30	30/30	57/57	70/80	70/80
	DD15CP	1	10.8/14.4	36.85/49.13	30.0/34.6	94/100	100/110	110/110	38/44	40/45	57/57	70/80	70/80
	DD20CP	2	14.9/19.8	50.84/67.56	41.3/47.6	108/116	125/125	125/125	52/60	60/60	57/57	70/80	70/80
	DD30CP	2	21.6/28.8	73.70/98.27	60.0/69.3	132/143	150/150	150/150	75/87	80/90	57/57	70/80	70/80
	DD40CP	2	29.7/39.6	101.34/135.12	82.5/95.2	160/176	175/175	200/200	104/119	110/125	57/57	70/80	70/80
RHPDZS120ACC	No Heat	—	—	—	—	58/58	70/90	70/90	—	—	58/58	70/90	70/90
	DD10CP	1	7.4/9.9	25.25/33.78	20.6/23.8	84/88	90/110	100/110	26/30	30/30	58/58	70/90	70/90
	DD15CP	1	10.8/14.4	36.85/49.13	30.0/34.6	96/101	100/110	110/110	38/44	40/45	58/58	70/90	70/90
	DD20CP	2	14.9/19.8	50.84/67.56	41.3/47.6	110/118	125/125	125/125	52/60	60/60	58/58	70/90	70/90
	DD30CP	2	21.6/28.8	73.70/98.27	60.0/69.3	133/145	150/150	150/150	75/87	80/90	58/58	70/90	70/90
	DD40CP	2	29.7/39.6	101.34/135.12	82.5/95.2	161/177	175/175	200/200	104/119	110/125	58/58	70/90	70/90
RHPDZS102ACF	No Heat	—	—	—	—	54/54	70/80	70/80	—	—	54/54	70/80	70/80
	DD10CP	1	7.4/9.9	25.25/33.78	20.6/23.8	80/84	90/100	90/100	26/30	30/30	54/54	70/80	70/80
	DD15CP	1	10.8/14.4	36.85/49.13	30.0/34.6	91/97	100/110	100/110	38/44	40/45	54/54	70/80	70/80
	DD20CP	2	14.9/19.8	50.84/67.56	41.3/47.6	106/113	110/125	125/125	52/60	60/60	54/54	70/80	70/80
	DD30CP	2	21.6/28.8	73.70/98.27	60.0/69.3	129/141	150/150	150/150	75/87	80/90	54/54	70/80	70/80
	DD40CP	2	29.7/39.6	101.34/135.12	82.5/95.2	157/173	175/175	200/200	104/119	110/125	54/54	70/80	70/80
RHPDZS120ACG	No Heat	—	—	—	—	57/57	70/80	70/80	—	—	57/57	70/80	70/80
	DD10CP	1	7.4/9.9	25.25/33.78	20.6/23.8	82/86	90/100	90/100	26/30	30/30	57/57	70/80	70/80
	DD15CP	1	10.8/14.4	36.85/49.13	30.0/34.6	94/100	100/110	110/110	38/44	40/45	57/57	70/80	70/80
	DD20CP	2	14.9/19.8	50.84/67.56	41.3/47.6	108/116	125/125	125/125	52/60	60/60	57/57	70/80	70/80
	DD30CP	2	21.6/28.8	73.70/98.27	60.0/69.3	132/143	150/150	150/150	75/87	80/90	57/57	70/80	70/80
	DD40CP	2	29.7/39.6	101.34/135.12	82.5/95.2	160/176	175/175	200/200	104/119	110/125	57/57	70/80	70/80
RHPDZS120ACH	No Heat	—	—	—	—	58/58	70/90	70/90	—	—	58/58	70/90	70/90
	DD10CP	1	7.4/9.9	25.25/33.78	20.6/23.8	84/88	90/100	100/110	26/30	30/30	58/58	70/90	70/90
	DD15CP	1	10.8/14.4	36.85/49.13	30.0/34.6	96/101	100/110	110/110	38/44	40/45	58/58	70/90	70/90
	DD20CP	2	14.9/19.8	50.84/67.56	41.3/47.6	110/118	125/125	125/125	52/60	60/60	58/58	70/90	70/90
	DD30CP	2	21.6/28.8	73.70/98.27	60.0/69.3	133/145	150/150	150/150	75/87	80/90	58/58	70/90	70/90
	DD40CP	2	29.7/39.6	101.34/135.12	82.5/95.2	161/177	175/175	200/200	104/119	110/125	58/58	70/90	70/90

*= For Canadian use only. Uses "P" fuses for inductive circuit.
+ = Field installed only.

208/240 VOLT, THREE PHASE, 60 Hz, AUXILIARY ELECTRIC HEATER KITS CHARACTERISTICS AND APPLICATION

Unit Model No. RHPDZ-	Single Power Supply for Both Unit and Heater Kit								Separate Power Supply for Both Unit and Heater Kit				
	Heater Kit					Heat Pump			Heater Kit		Heat Pump		
	RXJJ- Heater Kit Nominal kW	No. of Sequence Steps	Rated Heater kW @ 208/240 V	Heater KBTU/Hr @ 208/240 V	Heater Amp. @ 208/240 V	Unit Min. Ckt. Ampacity @ 208-240 V	Over Current Protective Device Size Min./Max. @ 208 V	Over Current Protective Device Size Min./Max. @ 240 V	Min. Ckt. Ampacity 208/240 V	Max. Fuse Size 208/240 V	Min. Circuit Ampacity 208/240 V	Over Current Protective Device Size Min./Max. @ 208 V	Over Current Protective Device Size Min./Max. @ 240 V
RHPDZT090ACF	No Heat	—	—	—	—	44/44	50/60	50/60	—	—	44/44	50/60	50/60
	DD10CP	1	7.4/9.9	25.25/33.78	20.6/23.8	69/73	80/80	80/90	26/30	30/30	44/44	50/60	50/60
	DD15CP	1	10.8/14.4	36.85/49.13	30.0/34.6	81/87	90/90	90/100	38/44	40/45	44/44	50/60	50/60
	DD20CP	2	14.9/19.8	50.84/67.56	41.3/47.6	95/103	100/100	110/110	52/60	60/60	44/44	50/60	50/60
	DD30CP	2	21.6/28.8	73.70/98.27	60.0/69.3	119/130	125/125	150/150	75/87	80/90	44/44	50/60	50/60
	DD40CP	2	29.7/39.6	101.34/135.12	82.5/95.2	147/163	150/150	175/175	104/119	110/125	44/44	50/60	50/60
RHPDZT090ACG	No Heat	—	—	—	—	46/46	60/70	60/70	—	—	46/46	60/70	60/70
	DD10CP	1	7.4/9.9	25.25/33.78	20.6/23.8	72/76	80/90	80/90	26/30	30/30	46/46	60/70	60/70
	DD15CP	1	10.8/14.4	36.85/49.13	30.0/34.6	84/89	90/100	100/100	38/44	40/45	46/46	60/70	60/70
	DD20CP	2	14.9/19.8	50/84/67.56	41.3/47.6	98/106	110/110	110/110	52/60	60/60	46/46	60/70	60/70
	DD30CP	2	21.6/28.8	73.70/98.27	60.0/69.3	121/133	125/125	150/150	75/87	80/90	46/46	60/70	60/70
	DD40CP	2	29.7/39.6	101.34/135.12	82.5/95.2	149/165	175/175	175/175	104/119	110/125	46/46	60/70	60/70
RHPDZT090ACH	No Heat	—	—	—	—	46/46	60/70	60/70	—	—	46/46	60/70	60/70
	DD10CP	1	7.4/9.9	25.25/33.78	20.6/23.8	72/76	80/90	80/90	26/30	30/30	46/46	60/70	60/70
	DD15CP	1	10.8/14.4	36.85/49.13	30.0/34.6	84/89	90/100	100/100	38/44	40/45	46/46	60/70	60/70
	DD20CP	2	14.9/19.8	50.84/67.56	41.3/47.6	98/106	110/110	110/110	52/60	60/60	46/46	60/70	60/70
	DD30CP	2	21.6/28.8	73.70/98.27	60.0/69.3	121/133	125/125	150/150	75/87	80/90	46/46	60/70	60/70
	DD40CP	2	29.7/39.6	101.34/135.12	82.5/95.2	149/165	175/175	175/175	104/119	110/125	46/46	60/70	60/70
RHPDZT102ACF	No Heat	—	—	—	—	48/48	60/70	60/70	—	—	48/48	60/70	60/70
	DD10CP	1	7.4/9.9	25.25/33.78	20.6/23.8	74/78	80/90	90/100	26/30	30/30	48/48	60/70	60/70
	DD15CP	1	10.8/14.4	36.85/49.13	30.0/34.6	86/92	90/100	100/110	38/44	40/45	48/48	60/70	60/70
	DD20CP	2	14.9/19.8	50.84/67.56	41.3/47.6	100/108	110/110	125/125	52/60	60/60	48/48	60/70	60/70
	DD30CP	2	21.6/28.8	73.70/98.27	60.0/69.3	123/135	150/150	150/150	75/87	80/90	48/48	60/70	60/70
	DD40CP	2	29.7/39.6	101.34/135.12	82.5/95.2	152/167	175/175	175/175	104/119	110/125	48/48	60/70	60/70
RHPDZT102ACG	No Heat	—	—	—	—	50/50	60/70	60/70	—	—	50/50	60/70	60/70
	DD10CP	1	7.4/9.9	25.25/33.78	20.6/23.8	76/80	80/90	90/100	26/30	30/30	50/50	60/70	60/70
	DD15CP	1	10.8/14.4	36.85/49.13	30.0/34.6	88/94	100/100	100/110	38/44	40/45	50/50	60/70	60/70
	DD20CP	2	14.9/19.8	50.84/67.56	41.3/47.6	102/110	110/110	125/125	52/60	60/60	50/50	60/70	60/70
	DD30CP	2	21.6/28.8	73.70/98.27	60.0/69.3	125/137	150/150	150/150	75/87	80/90	50/50	60/70	60/70
	DD40CP	2	29.7/39.6	101.34/135.12	82.5/95.2	154/169	175/175	175/175	104/119	110/125	50/50	60/70	60/70
RHPDZT102ACH	No Heat	—	—	—	—	53/53	70/80	70/80	—	—	53/53	70/80	70/80
	DD10CP	1	7.4/9.9	25.25/33.78	20.6/23.8	79/83	90/100	90/100	26/30	30/30	53/53	70/80	70/80
	DD15CP	1	10.8/14.4	36.85/49.13	30.0/34.6	91/97	100/110	110/110	38/44	40/45	53/53	70/80	70/80
	DD20CP	2	14.9/19.8	50.84/67.56	41.3/47.6	105/113	110/110	125/125	52/60	60/60	53/53	70/80	70/80
	DD30CP	2	21.6/28.8	73.70/98.27	60.0/69.3	128/140	150/150	150/150	75/87	80/90	53/53	70/80	70/80
	DD40CP	2	29.7/39.6	101.34/135.12	82.5/95.2	157/172	175/175	200/200	104/119	110/125	53/53	70/80	70/80

*= For Canadian use only. Uses "P" fuses for inductive circuit.
+ = Field installed only.

208/240 VOLT, THREE PHASE, 60 Hz, AUXILIARY ELECTRIC HEATER KITS CHARACTERISTICS AND APPLICATION

Unit Model No. RHPDZ-	Single Power Supply for Both Unit and Heater Kit								Separate Power Supply for Both Unit and Heater Kit				
	Heater Kit					Heat Pump			Heater Kit		Heat Pump		
	RXJJ- Heater Kit Nominal kW	No. of Sequence Steps	Rated Heater kW @ 208/240 V	Heater KBTU/Hr @ 208/240 V	Heater Amp. @ 208/240 V	Unit Min. Ckt. Ampacity @ 208-240 V	Over Current Protective Device Size Min./Max. @ 208 V	Over Current Protective Device Size Min./Max. @ 240 V	Min. Ckt. Ampacity 208/240 V	Max. Fuse Size 208/240 V	Min. Circuit Ampacity 208/240 V	Over Current Protective Device Size Min./Max. @ 208 V	Over Current Protective Device Size Min./Max. @ 240 V
RHPDZT120ACF	No Heat	—	—	—	—	54/54	70/80	70/80	—	—	54/54	70/80	70/80
	DD10CP	1	0.1/7.4	0.34/25.25	2.0/20.6	56/80	70/80	90/100	15/26	15/30	54/54	70/80	70/80
	DD15CP	1	0.1/10.8	0.34/36.85	2.9/30.0	58/91	70/80	100/110	15/38	15/40	54/54	70/80	70/80
	DD20CP	2	0.1/14.9	0.34/50.84	4.0/41.3	59/106	70/90	110/125	15/52	15/60	54/54	70/80	70/80
	DD30CP	2	0.2/21.6	0.68/73.70	5.8/60.1	61/129	70/90	150/150	15/76	15/80	54/54	70/80	70/80
	DD40CP	2	0.3/29.7	1.02/101.34	7.9/82.5	64/157	70/90	175/175	15/104	15/110	54/54	70/80	70/80
RHPDZT120ACG	No Heat	—	—	—	—	57/57	70/80	70/80	—	—	57/57	70/80	70/80
	DD10CP	1	7.4/9.9	25.25/33.78	20.6/23.8	82/86	90/100	90/110	26/30	30/30	57/57	70/80	70/80
	DD15CP	1	10.8/14.4	36.85/49.13	30.0/34.6	94/100	100/110	110/110	38/44	40/45	57/57	70/80	70/80
	DD20CP	2	14.9/19.8	50.84/67.56	41.3/47.6	108/116	125/125	125/125	52/60	60/60	57/57	70/80	70/80
	DD30CP	2	21.6/28.8	73.70/98.27	60.0/69.3	132/143	150/150	150/150	75/87	80/90	57/57	70/80	70/80
	DD40CP	2	29.7/39.6	101.34/135.12	82.5/95.2	160/176	175/175	200/200	104/119	110/125	57/57	70/80	70/80
RHPDZT120ACH	No Heat	—	—	—	—	58/58	70/90	70/90	—	—	58/58	70/90	70/90
	DD10CP	1	7.4/9.9	25.25/33.78	20.6/23.8	84/88	90/110	100/110	26/30	30/30	58/58	70/90	70/90
	DD15CP	1	10.8/14.4	36.85/49.13	30.0/34.6	96/101	100/110	110/110	38/44	40/45	58/58	70/90	70/90
	DD20CP	2	14.9/19.8	50.84/67.56	41.3/47.6	110/118	125/125	125/125	52/60	60/60	58/58	70/90	70/90
	DD30CP	2	21.6/28.8	73.70/98.27	60.0/69.3	133/145	150/150	150/150	75/87	80/90	58/58	70/90	70/90
	DD40CP	2	29.7/39.6	101.34/135.12	82.5/95.2	161/177	175/175	200/200	104/119	110/125	58/58	70/90	70/90

*= For Canadian use only. Uses “P” fuses for inductive circuit.
+ = Field installed only.

480 VOLT, THREE PHASE, 60 Hz, AUXILIARY ELECTRIC HEATER KITS CHARACTERISTICS AND APPLICATION

Unit Model No. RHPDZ-	Single Power Supply for Both Unit and Heater Kit								Separate Power Supply for Both Unit and Heater Kit				
	Heater Kit					Heat Pump			Heater Kit		Heat Pump		
	RXJJ- Heater Kit Nominal kW	No. of Sequence Steps	Rated Heater kW @ 480 V	Heater KBTU/Hr @ 480 V	Heater Amp. @ 480 V	Unit Min. Ckt. Ampacity @ 480 V	Over Current Protective Device Size Min./Max. @ 480 V		Min. Ckt. Ampacity 480 V	Max. Fuse Size 480 V	Min. Circuit Ampacity 480 V	Over Current Protective Device Size Min./Max. @ 480 V	
RHPDZS090ADA	No Heat	—	—	—	—	19	25/25	—	—	—	19	25/25	—
	DD10DNV	1	9.9	33.78	11.9	34	35/35	—	15	15	19	25/25	—
	DD15DNV	1	14.4	49.13	17.3	40	45/45	—	22	25	19	25/25	—
	DD20DNV	2	19.8	67.56	23.8	48	50/50	—	30	30	19	25/25	—
	DD30DNV	2	28.8	98.27	34.6	62	70/70	—	44	45	19	25/25	—
	DD40DNV	2	39.6	135.12	47.6	78	80/80	—	60	60	19	25/25	—
RHPDZS090ADB	No Heat	—	—	—	—	20	25/25	—	—	—	20	25/25	—
	DD10DNV	1	9.9	33.78	11.9	35	40/40	—	15	15	20	25/25	—
	DD15DNV	1	14.4	49.13	17.3	42	45/45	—	22	25	20	25/25	—
	DD20DNV	2	19.8	67.56	23.8	50	60/60	—	30	30	20	25/25	—
	DD30DNV	2	28.8	98.27	34.6	63	70/70	—	44	45	20	25/25	—
	DD40DNV	2	39.6	135.12	47.6	80	90/90	—	60	60	20	25/25	—
RHPDZS090ADC	No Heat	—	—	—	—	20	25/25	—	—	—	20	25/25	—
	DD10DNV	1	9.9	33.78	11.9	35	40/40	—	15	15	20	25/25	—
	DD15DNV	1	14.4	49.13	17.3	42	45/45	—	22	25	20	25/25	—
	DD20DNV	2	19.8	67.56	23.8	50	60/60	—	30	30	20	25/25	—
	DD30DNV	2	28.8	98.27	34.6	63	70/70	—	44	45	20	25/25	—
	DD40DNV	2	39.6	135.12	47.6	80	90/90	—	60	60	20	25/25	—
RHPDZS090ADF	No Heat	—	—	—	—	19	25/25	—	—	—	19	25/25	—
	DD10DNV	1	9.9	33.78	11.9	34	35/35	—	15	15	19	25/25	—
	DD15DNV	1	14.4	49.13	17.3	40	45/45	—	22	25	19	25/25	—
	DD20DNV	2	19.8	67.56	23.8	48	50/50	—	30	30	19	25/25	—
	DD30DNV	2	28.8	98.27	34.6	62	70/70	—	44	45	19	25/25	—
	DD40DNV	2	39.6	135.12	47.6	78	80/80	—	60	60	19	25/25	—
RHPDZS090ADG	No Heat	—	—	—	—	20	25/25	—	—	—	20	25/25	—
	DD10DNV	1	9.9	33.78	11.9	35	40/40	—	15	15	20	25/25	—
	DD15DNV	1	14.4	49.13	17.3	42	45/45	—	22	25	20	25/25	—
	DD20DNV	2	19.8	67.56	23.8	50	60/60	—	30	30	20	25/25	—
	DD30DNV	2	28.8	98.27	34.6	63	70/70	—	44	45	20	25/25	—
	DD40DNV	2	39.6	135.12	47.6	80	90/90	—	60	60	20	25/25	—
RHPDZS090ADH	No Heat	—	—	—	—	20	25/25	—	—	—	20	25/25	—
	DD10DNV	1	9.9	33.78	11.9	35	40/40	—	15	15	20	25/25	—
	DD15DNV	1	14.4	49.13	17.3	42	45/45	—	22	25	20	25/25	—
	DD20DNV	2	19.8	67.56	23.8	50	60/60	—	30	30	20	25/25	—
	DD30DNV	2	28.8	98.27	34.6	63	70/70	—	44	45	20	25/25	—
	DD40DNV	2	39.6	135.12	47.6	80	90/90	—	60	60	20	25/25	—

*= For Canadian use only. Uses "P" fuses for inductive circuit.
+ = Field installed only.

480 VOLT, THREE PHASE, 60 Hz, AUXILIARY ELECTRIC HEATER KITS CHARACTERISTICS AND APPLICATION

Unit Model No. RHPDZ-	Single Power Supply for Both Unit and Heater Kit								Separate Power Supply for Both Unit and Heater Kit				
	Heater Kit					Heat Pump			Heater Kit		Heat Pump		
	RXJJ- Heater Kit Nominal kW	No. of Sequence Steps	Rated Heater kW @ 480 V	Heater KBTU/Hr @ 480 V	Heater Amp. @ 480 V	Unit Min. Ckt. Ampacity @ 480 V	Over Current Protective Device Size Min./Max. @ 480 V		Min. Ckt. Ampacity 480 V	Max. Fuse Size 480 V	Min. Circuit Ampacity 480 V	Over Current Protective Device Size Min./Max. @ 480 V	
RHPDZS102ADA	No Heat	—	—	—	—	23	30/30	—	—	—	23	30/30	—
	DD10DNV	1	9.9	33.78	11.9	37	40/45	—	15	15	23	30/30	—
	DD15DNV	1	14.4	49.13	17.3	44	50/50	—	22	25	23	30/30	—
	DD20DNV	2	19.8	67.56	23.8	52	60/60	—	30	30	23	30/30	—
	DD30DNV	2	28.8	98.27	34.6	66	70/70	—	44	45	23	30/30	—
	DD40DNV	2	39.6	135.12	47.6	82	90/90	—	60	60	23	30/30	—
RHPDZS102ADB	No Heat	—	—	—	—	24	30/35	—	—	—	24	30/35	—
	DD10DNV	1	9.9	33.78	11.9	38	40/45	—	15	15	24	30/35	—
	DD15DNV	1	14.4	49.13	17.3	45	50/50	—	22	25	24	30/35	—
	DD20DNV	2	19.8	67.56	23.8	53	60/60	—	30	30	24	30/35	—
	DD30DNV	2	28.8	98.27	34.6	67	70/70	—	44	45	24	30/35	—
	DD40DNV	2	39.6	135.12	47.6	83	90/90	—	60	60	24	30/35	—
RHPDZS102ADC	No Heat	—	—	—	—	25	30/35	—	—	—	25	30/35	—
	DD10DNV	1	9.9	33.78	11.9	40	45/45	—	15	15	25	30/35	—
	DD15DNV	1	14.4	49.13	17.3	47	50/50	—	22	25	25	30/35	—
	DD20DNV	2	19.8	67.56	23.8	55	60/60	—	30	30	25	30/35	—
	DD30DNV	2	28.8	98.27	34.6	68	80/80	—	44	45	25	30/35	—
	DD40DNV	2	39.6	135.12	47.6	85	90/90	—	60	60	25	30/35	—
RHPDZS102ADF	No Heat	—	—	—	—	23	30/30	—	—	—	23	30/30	—
	DD10DNV	1	9.9	33.78	11.9	37	40/45	—	15	15	23	30/30	—
	DD15DNV	1	14.4	49.13	17.3	44	50/50	—	22	25	23	30/30	—
	DD20DNV	2	19.8	67.56	23.8	52	60/60	—	30	30	23	30/30	—
	DD30DNV	2	28.8	98.27	34.6	66	70/70	—	44	45	23	30/30	—
	DD40DNV	2	39.6	135.12	47.6	82	90/90	—	60	60	23	30/30	—
RHPDZS102ADG	No Heat	—	—	—	—	24	30/35	—	—	—	24	30/35	—
	DD10DNV	1	9.9	33.78	11.9	38	40/45	—	15	15	24	30/35	—
	DD15DNV	1	14.4	49.13	17.3	45	50/50	—	22	25	24	30/35	—
	DD20DNV	2	19.8	67.56	23.8	53	60/60	—	30	30	24	30/35	—
	DD30DNV	2	28.8	98.27	34.6	67	70/70	—	44	45	24	30/35	—
	DD40DNV	2	39.6	135.12	47.6	83	90/90	—	60	60	24	30/35	—
RHPDZS102ADH	No Heat	—	—	—	—	25	30/35	—	—	—	25	30/35	—
	DD10DNV	1	9.9	33.78	11.9	40	45/45	—	15	15	25	30/35	—
	DD15DNV	1	14.4	49.13	17.3	47	50/50	—	22	25	25	30/35	—
	DD20DNV	2	19.8	67.56	23.8	55	60/60	—	30	30	25	30/35	—
	DD30DNV	2	28.8	98.27	34.6	68	80/80	—	44	45	25	30/35	—
	DD40DNV	2	39.6	135.12	47.6	85	90/90	—	60	60	25	30/35	—

*= For Canadian use only. Uses "P" fuses for inductive circuit.
+ = Field installed only.

480 VOLT, THREE PHASE, 60 Hz, AUXILIARY ELECTRIC HEATER KITS CHARACTERISTICS AND APPLICATION

Unit Model No. RHPDZ-	Single Power Supply for Both Unit and Heater Kit								Separate Power Supply for Both Unit and Heater Kit				
	Heater Kit					Heat Pump			Heater Kit		Heat Pump		
	RXJJ-Heater Kit Nominal kW	No. of Sequence Steps	Rated Heater kW @ 480 V	Heater KBTU/Hr @ 480 V	Heater Amp. @ 480 V	Unit Min. Ckt. Ampacity @ 480 V	Over Current Protective Device Size Min./Max. @ 480 V		Min. Ckt. Ampacity 480 V	Max. Fuse Size 480 V	Min. Circuit Ampacity 480 V	Over Current Protective Device Size Min./Max. @ 480 V	
RHPDZS120ADA	No Heat	—	—	—	—	26	30/40	—	—	—	26	30/40	—
	DD10DNV	1	9.9	33.78	11.9	41	45/50	—	15	15	26	30/40	—
	DD15DNV	1	14.4	49.13	17.3	48	50/50	—	22	25	26	30/40	—
	DD20DNV	2	19.8	67.56	23.8	56	60/60	—	30	30	26	30/40	—
	DD30DNV	2	28.8	98.27	34.6	69	80/80	—	44	45	26	30/40	—
	DD40DNV	2	39.6	135.12	47.6	85	90/90	—	60	60	26	30/40	—
RHPDZS120ADB	No Heat	—	—	—	—	27	35/40	—	—	—	27	35/40	—
	DD10DNV	1	9.9	33.78	11.9	42	45/50	—	15	15	27	35/40	—
	DD15DNV	1	14.4	49.13	17.3	49	60/60	—	22	25	27	35/40	—
	DD20DNV	2	19.8	67.56	23.8	57	60/60	—	30	30	27	35/40	—
	DD30DNV	2	28.8	98.27	34.6	70	80/80	—	44	45	27	35/40	—
	DD40DNV	2	39.6	135.12	47.6	87	90/90	—	60	60	27	35/40	—
RHPDZS120ADC	No Heat	—	—	—	—	28	35/40	—	—	—	28	35/40	—
	DD10DNV	1	9.9	33.78	11.9	43	45/50	—	15	15	28	35/40	—
	DD15DNV	1	14.4	49.13	17.3	50	60/60	—	22	25	28	35/40	—
	DD20DNV	2	19.8	67.56	23.8	58	60/60	—	30	30	28	35/40	—
	DD30DNV	2	28.8	98.27	34.6	71	80/80	—	44	45	28	35/40	—
	DD40DNV	2	39.6	135.12	47.6	87	90/90	—	60	60	28	35/40	—
RHPDZS120ADF	No Heat	—	—	—	—	26	30/40	—	—	—	26	30/40	—
	DD10DNV	1	9.9	33.78	11.9	41	45/50	—	15	15	26	30/40	—
	DD15DNV	1	14.4	49.13	17.3	48	50/50	—	22	25	26	30/40	—
	DD20DNV	2	19.8	67.56	23.8	56	60/60	—	30	30	26	30/40	—
	DD30DNV	2	28.8	98.27	34.6	69	80/80	—	44	45	26	30/40	—
	DD40DNV	2	39.6	135.12	47.6	85	90/90	—	60	60	26	30/40	—
RHPDZS120ADG	No Heat	—	—	—	—	27	35/40	—	—	—	27	35/40	—
	DD10DNV	1	9.9	33.78	11.9	42	45/50	—	15	15	27	35/40	—
	DD15DNV	1	14.4	49.13	17.3	49	60/60	—	22	25	27	35/40	—
	DD20DNV	2	19.8	67.56	23.8	57	60/60	—	30	30	27	35/40	—
	DD30DNV	2	28.8	98.27	34.6	70	80/80	—	44	45	27	35/40	—
	DD40DNV	2	39.6	135.12	47.6	87	90/90	—	60	60	27	35/40	—
RHPDZS120ADH	No Heat	—	—	—	—	28	35/40	—	—	—	28	35/40	—
	DD10DNV	1	9.9	33.78	11.9	43	45/50	—	15	15	28	35/40	—
	DD15DNV	1	14.4	49.13	17.3	50	60/60	—	22	25	28	35/40	—
	DD20DNV	2	19.8	67.56	23.8	58	60/60	—	30	30	28	35/40	—
	DD30DNV	2	28.8	98.27	34.6	71	80/80	—	44	45	28	35/40	—
	DD40DNV	2	39.6	135.12	47.6	87	90/90	—	60	60	28	35/40	—

*= For Canadian use only. Uses "P" fuses for inductive circuit.
+ = Field installed only.

480 VOLT, THREE PHASE, 60 Hz, AUXILIARY ELECTRIC HEATER KITS CHARACTERISTICS AND APPLICATION

Unit Model No. RHPDZ-	Single Power Supply for Both Unit and Heater Kit								Separate Power Supply for Both Unit and Heater Kit				
	Heater Kit					Heat Pump			Heater Kit		Heat Pump		
	RXJJ- Heater Kit Nominal kW	No. of Sequence Steps	Rated Heater kW @ 480 V	Heater KBTU/Hr @ 480 V	Heater Amp. @ 480 V	Unit Min. Ckt. Ampacity @ 480 V	Over Current Protective Device Size Min./Max. @ 480 V		Min. Ckt. Ampacity 480 V	Max. Fuse Size 480 V	Min. Circuit Ampacity 480 V	Over Current Protective Device Size Min./Max. @ 480 V	
RHPDZT090ADF	No Heat	—	—	—	—	19	25/25	—	—	—	19	25/25	—
	DD10DNV	1	9.9	33.78	11.9	34	35/35	—	15	15	19	25/25	—
	DD15DNV	1	14.4	49.13	17.3	40	45/45	—	22	25	19	25/25	—
	DD20DNV	2	19.8	67.56	23.8	48	50/50	—	30	30	19	25/25	—
	DD30DNV	2	28.8	98.27	34.6	62	70/70	—	44	45	19	25/25	—
	DD40DNV	2	39.6	135.12	47.6	78	80/80	—	60	60	19	25/25	—
RHPDZT090ADG	No Heat	—	—	—	—	20	25/25	—	—	—	20	25/25	—
	DD10DNV	1	9.9	33.78	11.9	35	40/40	—	15	15	20	25/25	—
	DD15DNV	1	14.4	49.13	17.3	42	45/45	—	22	25	20	25/25	—
	DD20DNV	2	19.8	67.56	23.8	50	60/60	—	30	30	20	25/25	—
	DD30DNV	2	28.8	98.27	34.6	63	70/70	—	44	45	20	25/25	—
	DD40DNV	2	39.6	135.12	47.6	80	90/90	—	60	60	20	25/25	—
RHPDZT090ADH	No Heat	—	—	—	—	20	25/25	—	—	—	20	25/25	—
	DD10DNV	1	9.9	33.78	11.9	35	40/40	—	15	15	20	25/25	—
	DD15DNV	1	14.4	49.13	17.3	42	45/45	—	22	25	20	25/25	—
	DD20DNV	2	19.8	67.56	23.8	50	60/60	—	30	30	20	25/25	—
	DD30DNV	2	28.8	98.27	34.6	63	70/70	—	44	45	20	25/25	—
	DD40DNV	2	39.6	135.12	47.6	80	90/90	—	60	60	20	25/25	—
RHPDZT102ADF	No Heat	—	—	—	—	23	30/30	—	—	—	23	30/30	—
	DD10DNV	1	9.9	33.78	11.9	37	40/45	—	15	15	23	30/30	—
	DD15DNV	1	14.4	49.13	17.3	44	50/50	—	22	25	23	30/30	—
	DD20DNV	2	19.8	67.56	23.8	52	60/60	—	30	30	23	30/30	—
	DD30DNV	2	28.8	98.27	34.6	66	70/70	—	44	45	23	30/30	—
	DD40DNV	2	39.6	135.12	47.6	82	90/90	—	60	60	23	30/30	—
RHPDZT102ADG	No Heat	—	—	—	—	24	30/35	—	—	—	24	30/35	—
	DD10DNV	1	9.9	33.78	11.9	38	40/45	—	15	15	24	30/35	—
	DD15DNV	1	14.4	49.13	17.3	45	50/50	—	22	25	24	30/35	—
	DD20DNV	2	19.8	67.56	23.8	53	60/60	—	30	30	24	30/35	—
	DD30DNV	2	28.8	98.27	34.6	67	70/70	—	44	45	24	30/35	—
	DD40DNV	2	39.6	135.12	47.6	83	90/90	—	60	60	24	30/35	—
RHPDZT102ADH	No Heat	—	—	—	—	25	30/35	—	—	—	25	30/35	—
	DD10DNV	1	9.9	33.78	11.9	40	45/45	—	15	15	25	30/35	—
	DD15DNV	1	14.4	49.13	17.3	47	50/50	—	22	25	25	30/35	—
	DD20DNV	2	19.8	67.56	23.8	55	60/60	—	30	30	25	30/35	—
	DD30DNV	2	28.8	98.27	34.6	68	80/80	—	44	45	25	30/35	—
	DD40DNV	2	39.6	135.12	47.6	85	90/90	—	60	60	25	30/35	—

*= For Canadian use only. Uses “P” fuses for inductive circuit.
+ = Field installed only.

480 VOLT, THREE PHASE, 60 Hz, AUXILIARY ELECTRIC HEATER KITS CHARACTERISTICS AND APPLICATION

Unit Model No. RHPDZ-	Single Power Supply for Both Unit and Heater Kit								Separate Power Supply for Both Unit and Heater Kit				
	Heater Kit					Heat Pump			Heater Kit		Heat Pump		
	RXJJ- Heater Kit Nominal kW	No. of Sequence Steps	Rated Heater kW @ 480 V	Heater KBTU/Hr @ 480 V	Heater Amp. @ 480 V	Unit Min. Ckt. Ampacity @ 480 V	Over Current Protective Device Size Min./Max. @ 480 V	Over Current Protective Device Size	Min. Ckt. Ampacity 480 V	Max. Fuse Size 480 V	Min. Circuit Ampacity 480 V	Over Current Protective Device Size Min./Max. @ 480 V	Over Current Protective Device Size
RHPDZT120ADF	No Heat	—	—	—	—	26	30/40	—	—	—	26	30/40	—
	DD10DNV	1	9.9	33.78	11.9	41	45/50	—	15	15	26	30/40	—
	DD15DNV	1	14.4	49.13	17.3	48	50/50	—	22	25	26	30/40	—
	DD20DNV	2	19.8	67.56	23.8	56	60/60	—	30	30	26	30/40	—
	DD30DNV	2	28.8	98.27	34.6	69	80/80	—	44	45	26	30/40	—
	DD40DNV	2	39.6	135.12	47.6	85	90/90	—	60	60	26	30/40	—
RHPDZT120ADG	No Heat	—	—	—	—	27	35/40	—	—	—	27	35/40	—
	DD10DNV	1	9.9	33.78	11.9	42	45/50	—	15	15	27	35/40	—
	DD15DNV	1	14.4	49.13	17.3	49	60/60	—	22	25	27	35/40	—
	DD20DNV	2	19.8	67.56	23.8	57	60/60	—	30	30	27	35/40	—
	DD30DNV	2	28.8	98.27	34.6	70	80/80	—	44	45	27	35/40	—
	DD40DNV	2	39.6	135.12	47.6	87	90/90	—	60	60	27	35/40	—
RHPDZT120ADH	No Heat	—	—	—	—	28	35/40	—	—	—	28	35/40	—
	DD10DNV	1	9.9	33.78	11.9	43	45/50	—	15	15	28	35/40	—
	DD15DNV	1	14.4	49.13	17.3	50	60/60	—	22	25	28	35/40	—
	DD20DNV	2	19.8	67.56	23.8	58	60/60	—	30	30	28	35/40	—
	DD30DNV	2	28.8	98.27	34.6	71	80/80	—	44	45	28	35/40	—
	DD40DNV	2	39.6	135.12	47.6	87	90/90	—	60	60	28	35/40	—

*= For Canadian use only. Uses “P” fuses for inductive circuit.
+ = Field installed only.

600 VOLT, THREE PHASE, 60 Hz, AUXILIARY ELECTRIC HEATER KITS CHARACTERISTICS AND APPLICATION

Unit Model No. RHPDZ-	Single Power Supply for Both Unit and Heater Kit								Separate Power Supply for Both Unit and Heater Kit				
	Heater Kit					Heat Pump			Heater Kit		Heat Pump		
	RXJJ- Heater Kit Nominal kW	No. of Sequence Steps	Rated Heater kW @ 600 V	Heater KBTU/Hr @ 600 V	Heater Amp. @ 600 V	Unit Min. Ckt. Ampacity @ 600 V	Over Current Protective Device Size Min./Max. @ 600 V		Min. Ckt. Ampacity 600 V	Max. Fuse Size 600 V	Min. Circuit Ampacity 600 V	Over Current Protective Device Size Min./Max. @ 600 V	
RHPDZS090AYA	No Heat	—	—	—	—	14	20/20	—	—	—	14	20/20	—
RHPDZS090AYB	No Heat	—	—	—	—	15	20/20	—	—	—	15	20/20	—
RHPDZS090AYC	No Heat	—	—	—	—	15	20/20	—	—	—	15	20/20	—
RHPDZS090AYF	No Heat	—	—	—	—	14	20/20	—	—	—	14	20/20	—
RHPDZS090AYG	No Heat	—	—	—	—	15	20/20	—	—	—	15	20/20	—
RHPDZS090AYH	No Heat	—	—	—	—	15	20/20	—	—	—	15	20/20	—
RHPDZS102AYA	No Heat	—	—	—	—	17	20/25	—	—	—	17	20/25	—
RHPDZS102AYB	No Heat	—	—	—	—	18	25/25	—	—	—	18	25/25	—
RHPDZS102AYC	No Heat	—	—	—	—	18	25/25	—	—	—	18	25/25	—
RHPDZS102AYF	No Heat	—	—	—	—	17	20/25	—	—	—	17	20/25	—
RHPDZS102AYG	No Heat	—	—	—	—	18	25/25	—	—	—	18	25/25	—
RHPDZS102AYH	No Heat	—	—	—	—	18	25/25	—	—	—	18	25/25	—
RHPDZS120AYA	No Heat	—	—	—	—	19	25/25	—	—	—	19	25/25	—
RHPDZS120AYB	No Heat	—	—	—	—	20	25/30	—	—	—	20	25/30	—
RHPDZS120AYC	No Heat	—	—	—	—	20	25/30	—	—	—	20	25/30	—
RHPDZS120AYF	No Heat	—	—	—	—	19	25/25	—	—	—	19	25/25	—
RHPDZS120AYG	No Heat	—	—	—	—	20	25/30	—	—	—	20	25/30	—
RHPDZS120AYH	No Heat	—	—	—	—	20	25/30	—	—	—	20	25/30	—
RHPDZT090AYF	No Heat	—	—	—	—	14	20/20	—	—	—	14	20/20	—
RHPDZT090AYG	No Heat	—	—	—	—	15	20/20	—	—	—	15	20/20	—
RHPDZT090AYH	No Heat	—	—	—	—	15	20/20	—	—	—	15	20/20	—
RHPDZT102AYF	No Heat	—	—	—	—	17	20/25	—	—	—	17	20/25	—
RHPDZT102AYG	No Heat	—	—	—	—	18	25/25	—	—	—	18	25/25	—
RHPDZT102AYH	No Heat	—	—	—	—	18	25/25	—	—	—	18	25/25	—
RHPDZT120AYF	No Heat	—	—	—	—	19	25/25	—	—	—	19	25/25	—
RHPDZT120AYG	No Heat	—	—	—	—	20	25/30	—	—	—	20	25/30	—
RHPDZT120AYH	No Heat	—	—	—	—	20	25/30	—	—	—	20	25/30	—

*= For Canadian use only. Uses “P” fuses for inductive circuit.
+ = Field installed only.

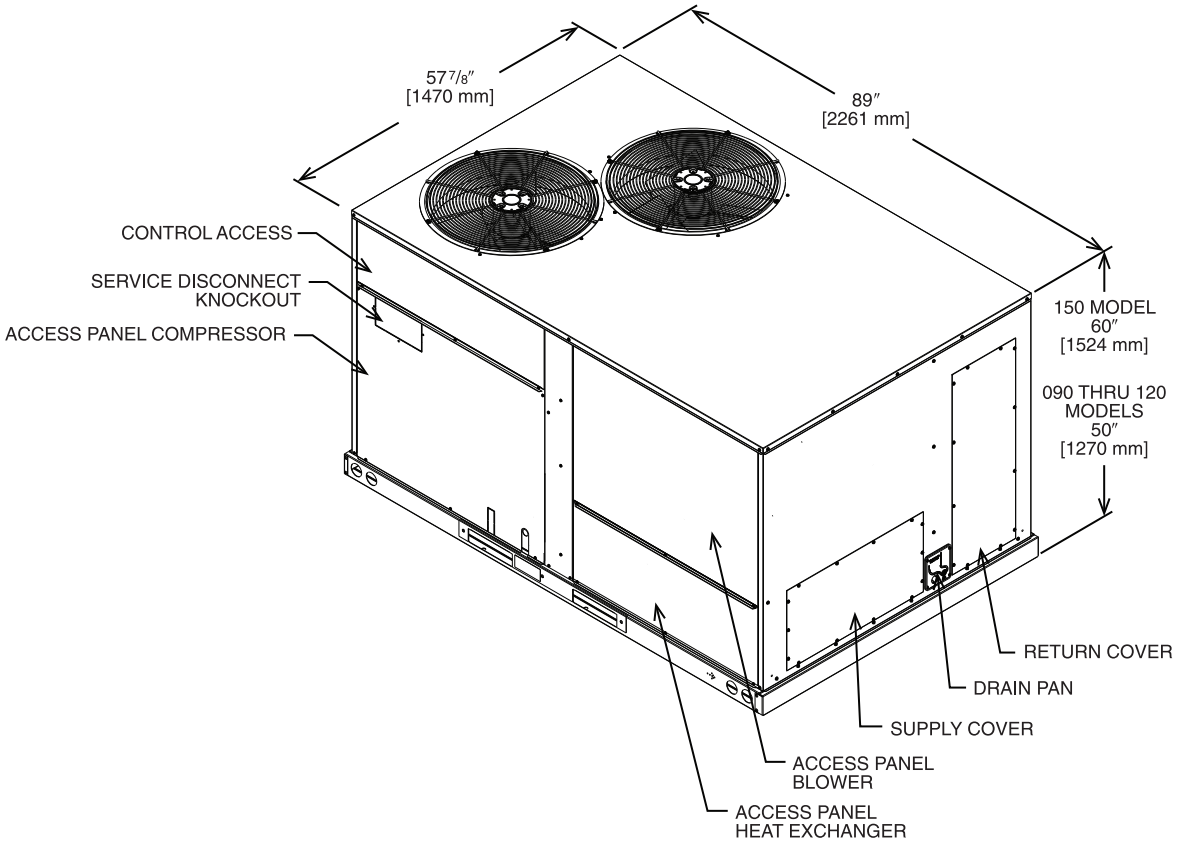

Illustration
ST-A1273-26-00

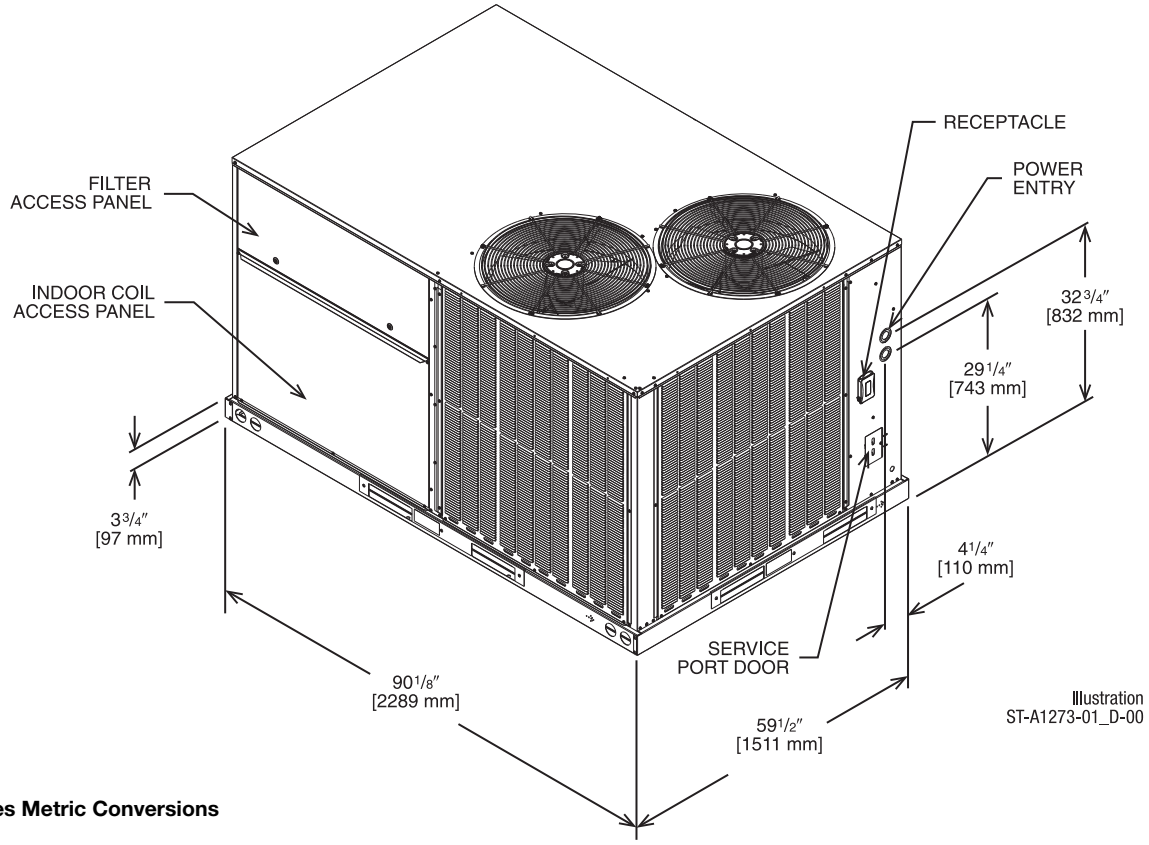

Illustration
ST-A1273-01_D-00

[ ] Designates Metric Conversions

SUPPLY AND RETURN DIMENSIONS FOR HORIZONTAL APPLICATIONS

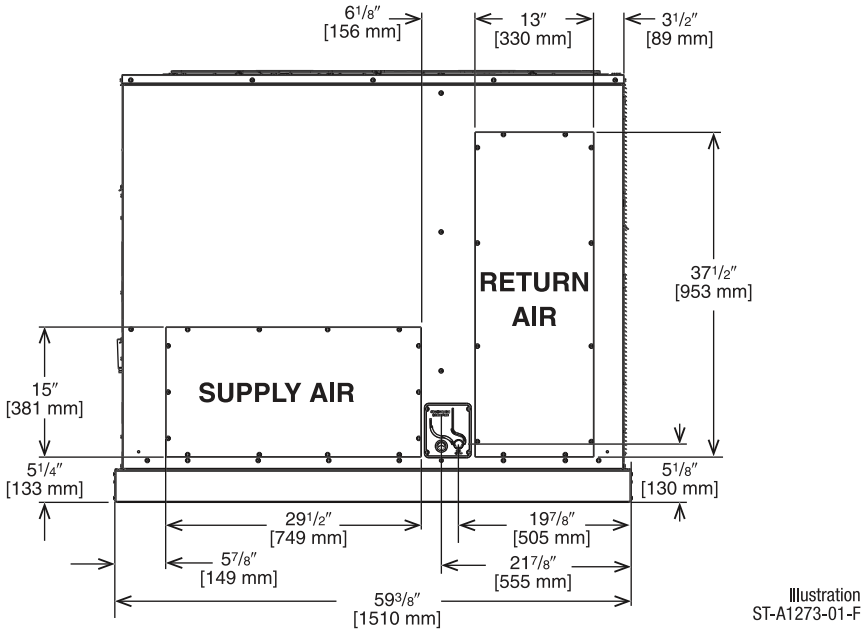

Illustration
ST-A1273-01-F

SUPPLY AND RETURN DIMENSIONS FOR DOWNFLOW APPLICATIONS

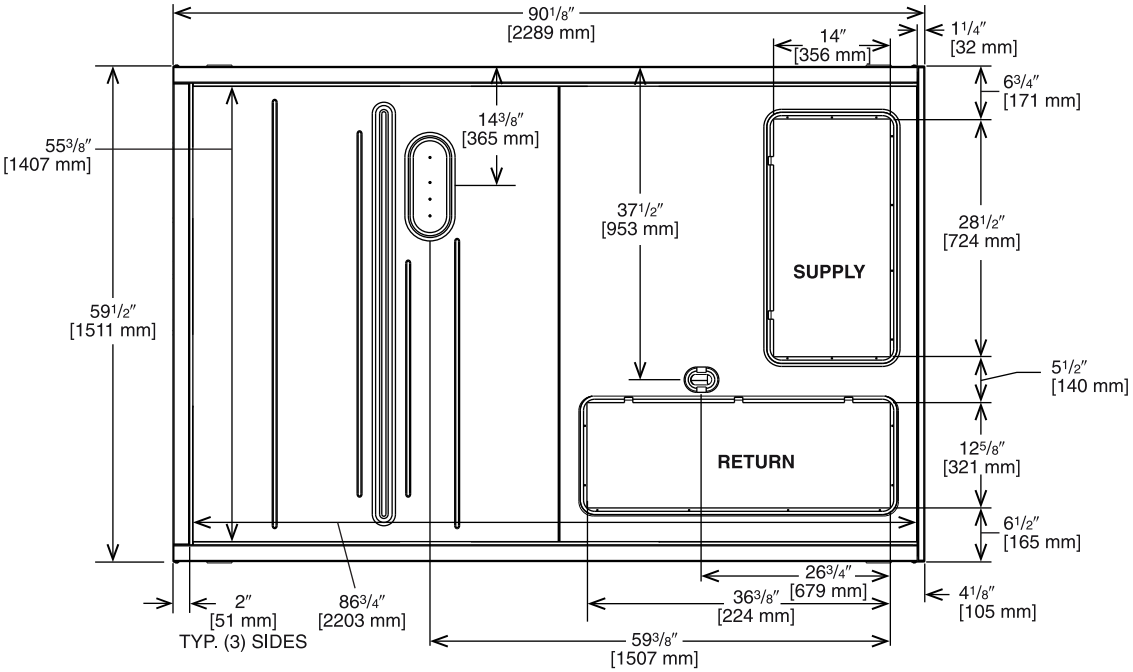

Illustration
ST-A1273-01_A-00

[ ] Designates Metric Conversions

WEIGHTS

Capacity Tons [kW]	Corner Weights by Percentage			
	A	B	C	D
7.5-12.5 [21.1-44.0]	26%	34%	17%	23%

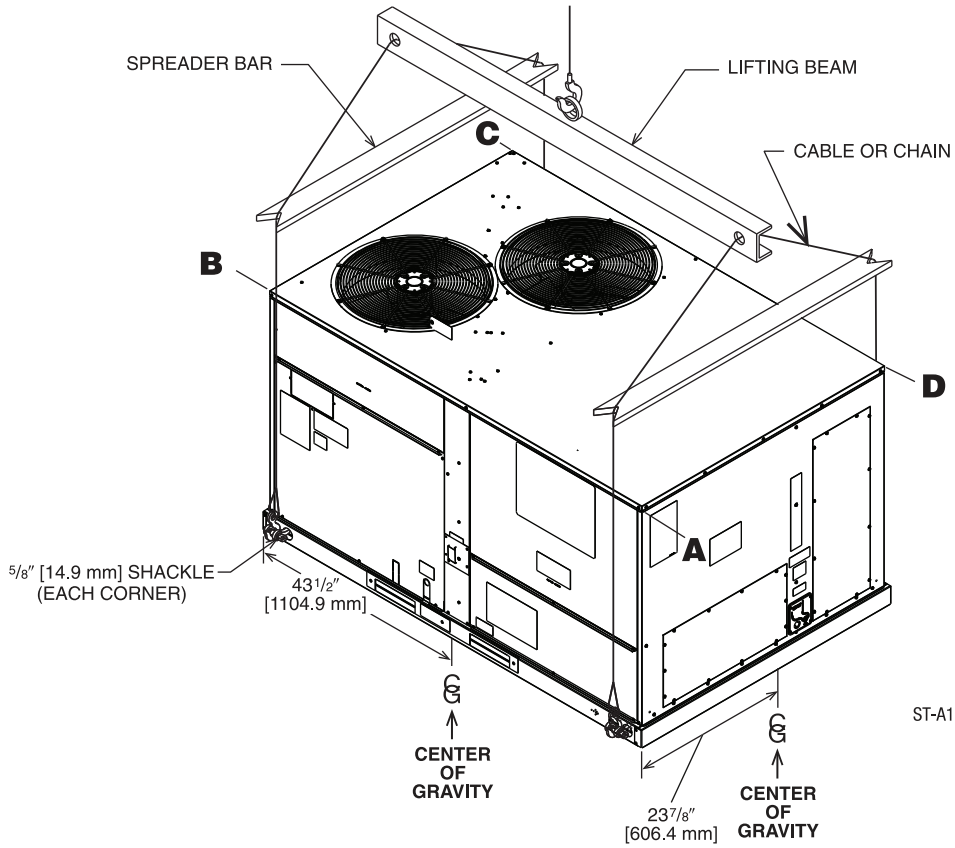

Illustration
ST-A1273-01_J-00

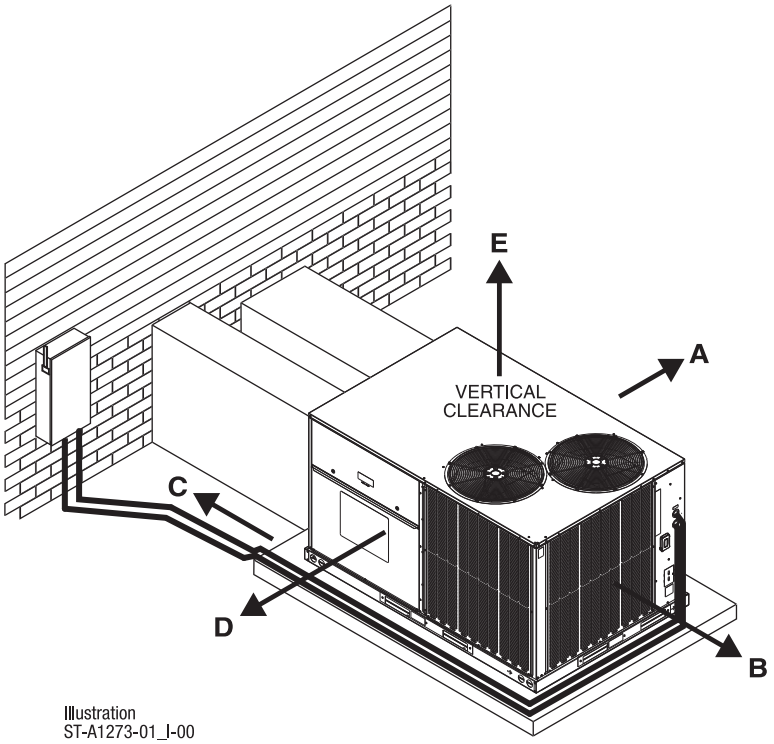

Illustration
ST-A1273-01_I-00

CLEARANCES

The following minimum clearances must be observed for proper unit performance and serviceability.

RECOMMENDED CLEARANCE In. [mm]	LOCATION
48 [1219]	A - FRONT
24 [609]	B - CONDENSER END
48 [1219] ①	C - DUCT END
24 [609] ②	D - FILTER SIDE
60 [1524]	E - ABOVE

① 18" [457 mm] MINIMUM IF DRAINPAN WILL NOT BE REMOVED.

② 48" [1219 MM] MINIMUM IF ECONOMIZER IS INSTALLED.

FIELD INSTALLED ACCESSORY EQUIPMENT (cont'd.)

Accessory	Model Number	Shipping Weight Lbs. [kg]	Installed Weight Lbs. [kg]	Factory Installation Available?
Economizer w/Single Enthalpy (Downflow)	RXRD-01MDDAM3	86 [39.0]	57 [25.9]	Yes
Economizer w/Single Enthalpy (Horizontal)	RXRD-01MDHAM3	84 [38.1]	55 [24.9]	Yes
Economizer-w/Single Enthalpy (Downflow) DDC	RXRD-01MDDBM3	86 [39.0]	57 [25.9]	No
Economizer w/Single Enthalpy (Horizontal) DDC	RXRD-01MDHBM3	84 [38.1]	55 [24.9]	No
Dual Enthalpy Kit	RXRX-BV01	1 [.5]	1 [.5]	No
Dual Enthalpy Kit DDC	RXRX-BV02	1 [.5]	1 [.5]	No
Carbon Dioxide Sensor (Wall Mount)	RXRX-AR02	3 [1.4]	2 [1.0]	No
Power Exhaust	RXRX-CDF01C	58 [26.3]	48 [21.8]	No
Power Exhaust	RXRX-CDF01D	50 [22.7]	44 [20.0]	No
Manual Fresh Air Damper	RXRF-ADA1	15 [6.8]	12 [5.4]	No
Motorized Fresh Air Damper	RXRF-ADB1	38 [17.2]	31 [14.06]	No
Motorized Fresh Air Damper (DDC)	RXRF-ADC1	38 [17.2]	31 [14.06]	No
Roofcurb, 14"	RXKG-DDD14	109 [49.4]	104 [47.2]	No
Roofcurb, 24'	RXKG-DDD24	145 [65.8]	140 [63.5]	No
Roofcurb Adapter	RXRX-DDCAE	235 [106.6]	215 [97.5]	No
Concentric Diffuser 7.5/8.5 Ton Flush	RXRN-AEF2000	235 [106.6]	215 [97.5]	No
Concentric Diffuser 10.0 Ton Flush	RXRN-AEF3415	30 [13.6]	25 [11.3]	No
Concentric Diffuser 12.5 Ton Flush	RXRN-AEF3618	250 [113.4]	130 [59]	No
Concentric Diffuser 7.5/8.5 Ton Drop	RXRN-AED2000	275 [124.7]	170 [77.1]	No
Concentric Diffuser 10.0 Ton Drop	RXRN-AED3415	35 [15.9]	30 [13.6]	No
Concentric Diffuser 12.5 Ton Drop	RXRN-AED3618	270 [122.5]	160 [72.6]	No
Concentric Adapter 7.5/8.5 Ton Drop	RXMC-DD01	300 [136.1]	180 [81.6]	No
Concentric Adapter 10 Ton Drop	RXMC-DD02	25 [11.3]	20 [9.1]	No
Concentric Adapter 12.5 Ton Drop	RXMC-DD03	75 [34]	65 [29.5]	No
Outdoor Coil Louver Kit - ACD/090/102/120	RXRX-ADD04A	52 [23.6]	47 [21.3]	Yes
Outdoor Coil Louver Kit - ACD150	RXRX-ADD04B	43 [19.5]	39 [17.7]	Yes
Unwired Convenience Outlet	RXRX-BN01	2 [1.0]	1.5 [.7]	Yes
Unfused Service Disconnect	RXRX-BP01	10 [4.5]	9 [4.1]	Yes
Comfort Alert (1 Per Compressor)	RXRX-AZ01 DDC	3 [1.5]	2 [0.9]	Yes
Comfort Alert (1 Per Compressor)	RXRX-AZ02	3 [1.5]	2 [0.9]	Yes
BACnet Communication Card	RXRX-AY01	1 [0.5]	1 [0.5]	No
LonWorks Communication Card	RXRX-AY02	1 [0.5]	1 [0.5]	No
Room Humidity Sensor	RHC-ZNS4	1 [0.5]	1 [0.5]	No
Room Temperature and Relative Humidity Sensor	RHC-ZNS5	1 [0.5]	1 [0.5]	No
Low-Ambient Control Kit	RXRZ-A04	4 [1.8]	3 [1.4]	Yes
Freeze Stat Kit	RXRX-AM01	2 [1.0]	1.5 [.7]	Yes

[ ] Designates Metric Conversions

FIELD INSTALLED ACCESSORY EQUIPMENT

Accessory	Model Number	Shipping Weight Lbs. [kg]	Installed Weight Lbs. [kg]	Factory Installation Available?
Variable Frequency Drive Kit	RXRX-AC02	9.1 [4.1]	7.6 [3.4]	No
	RXRX-AC03	11.7 [5.3]	10.2 [4.6]	No
	RXRX-AC05	11.7 [5.3]	10.2 [4.6]	No
	RXRX-AD02	9.4 [4.3]	7.9 [3.6]	No
	RXRX-AD03	12.3 [5.6]	10.8 [4.9]	No
	RXRX-AD05	12.3 [5.6]	10.8 [4.9]	No
	RXRX-CC02	9.1 [4.1]	7.6 [3.4]	No
	RXRX-CC03	11.7 [5.3]	10.2 [4.6]	No
	RXRX-CC05	11.7 [5.3]	10.2 [4.6]	No
	RXRX-CD02	9.4 [4.3]	7.9 [3.6]	No
	RXRX-CD03	12.3 [5.6]	10.8 [4.9]	No
	RXRX-CD05	12.3 [5.6]	10.8 [4.9]	No
Electric Heater Kits	RXJJ-DD10CP	30 [13.6]	27.5 [12.5]	Yes
	RXJJ-DD15CP	32 [14.5]	29.5 [13.4]	Yes
	RXJJ-DD20CP	34 [15.4]	31.5 [14.3]	Yes
	RXJJ-DD30CP	37 [16.8]	34.5 [15.6]	Yes
	RXJJ-DD40CP	40 [18.1]	37.5 [17]	Yes
	RXJJ-DD10DNV	30 [13.6]	27.5 [12.5]	Yes
	RXJJ-DD15DNV	32 [14.5]	29.5 [13.4]	Yes
	RXJJ-DD20DNV	34 [15.4]	31.5 [14.3]	Yes
	RXJJ-DD30DNV	37 [16.8]	34.5 [15.6]	Yes
	RXJJ-DD40DNV	40 [18.1]	37.5 [17]	Yes
Single Point Wiring Kit	RXJX-AC0605	23 [10.4]	25 [11.3]	No
	RXJX-AC0805	24 [10.9]	26 [11.8]	No
	RXJX-AD0405	25 [11.3]	27 [12.2]	No
	RXJX-AD0605	25 [11.3]	27 [12.2]	No
	RXJX-AD0409	25 [11.3]	27 [12.2]	No
	RXJX-AC0909	26 [11.8]	28 [12.7]	No
	RXJX-AD0609	25 [11.3]	27 [12.2]	No

[ ] Designates Metric Conversions

VARIABLE FREQUENCY DRIVE KIT

RXRX – A C 02

HORSEPOWER
02 = 2 HORSEPOWER
03 = 3 HORSEPOWER
05 = 5 HORSEPOWER

VOLTAGE
C = 230V
D = 480V

DESIGN SERIES
A = TWO WIRE CONTROL
C = COMMUNICATING

Kit Model Number	Volts	Unit Application
RXJX-AC0605	C Voltage 240V	ACD 090/102
RXJX-AC0805	C Voltage 240V	ACD 120
RXJX-AD0605	D Voltage 480/600V	ACD 090/102/120
RXJX-AC0805	C Voltage 240V	HPD 090/102
RXJX-AD0405	D Voltage 480/600V	HPD 090/102
RXJX-AC0909	C Voltage 240V	ACD 150
RXJX-AD0609	D Voltage 480/600V	ACD 150
RXJX-AC0909	C Voltage 240V	HPD 120
RXJX-AD0409	D Voltage 480/600V	HPD 120

SINGLE POINT WIRING KIT

RXJX – A C 090 09

CABINET CODE
05 = ACD 090/102/120 C VOLTAGE
ACD 090/102/120 D VOLTAGE
HPD 090/120 C VOLTAGE
HPD 090/120 D VOLTAGE
09 = ACD 150 C VOLTAGE
ACD 150 D VOLTAGE
HPD 120 C VOLTAGE
HPD 120 D VOLTAGE

AMPERAGE
04 = 40 AMPS
06 = 60 AMPS
08 = 80 AMPS
09 = 90 AMPS

VOLTAGE
C = 208/230 V
D = 460 V

SERIES

FLUSH MOUNT ROOM TEMPERATURE SENSORS FOR NETWORKED DDC APPLICATIONS

ROOM TEMPERATURE SENSOR with TIMED OVERRIDE BUTTON **ZNS-101**

10kΩ room temperature sensor transmits room temperature to DDC system. Timed override button allows tenant to change from unoccupied temperature setpoint to occupied temperature setpoint for a preset time.

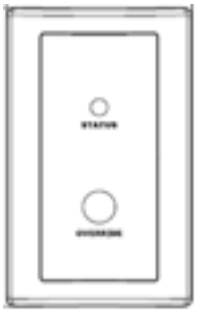

ROOM TEMPERATURE SENSOR with TIMED OVERRIDE BUTTON and STATUS INDICATOR **ZNS-102**

10kΩ room temperature sensor transmits room temperature to DDC system. Timed override button allows tenant to change from unoccupied temperature setpoint to occupied temperature setpoint for a preset time. Status Indicator Light transmits ALARM flash code to occupied space.

ROOM TEMPERATURE SENSOR with SETPOINT ADJUSTMENT and TIMED OVERRIDE BUTTON **ZNS-103**

10kΩ room temperature sensor with setpoint adjustment transmits room temperature to DDC system along with desired occupied room temperature setpoint. Timed override button allows tenant to change from unoccupied temperature setpoint to occupied temperature setpoint for a preset time.

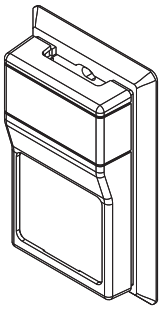

ROOM HUMIDITY SENSOR **RHC-ZNS4**

Transmits room relative humidity to DDC System.

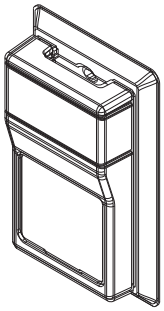

ROOM TEMPERATURE AND RELATIVE HUMIDITY SENSOR **RHC-ZNS5**

Transmits room temperature and relative humidity to DDC System.

COMMUNICATION CARDS
Field Installed

BACnet® COMMUNICATION CARD RXRX-AY01

The field installed BACnet® Communication Card allows the RTU-C unit controller to communicate with a third party building management system that supports the BACnet Application Specific Controller device profile. The BACnet® Communication Module plugs onto the unit RTU-C controller and allows communication between the RTU-C and the BACnet MSTP network.

LonWorks® COMMUNICATION CARD RXRX-AY02

The field installed LonWorks® Communication Card allows the RTU-C unit controller to communicate with a third party building management system that supports the LonMark Space Comfort Controller (SCC) functional profile or LonMark Discharge Air Controller (DAC) functional profile. The LonMark Communication Module plugs onto the RTU-C controller and allows communication between the RTU-C and a LonWorks Network.

NON-DDC ECONOMIZER FOR DOWNFLOW DUCT INSTALLATION

Use to Select Factory Installed Options Only

RXRD-01MDDAM3—Single Enthalpy (Outdoor) and AXRD-SJCM3 Single Enthalpy with Smoke Detector
RXRX-BV02—Dual Enthalpy Upgrade Kit
RXRX-AR02—Optional Wall-Mounted CO_2 Sensor

- Features **Honeywell** Controls
- Available Factory Installed or Field Accessory
- Gear Driven Direct Drive Actuator
- Fully Modulating (0-100%)
- Low Leakage Dampers
- Slip-In Design for Easy Installation
- Standard Barometric Relief Damper
- Single Enthalpy with Dual Enthalpy Upgrade Kit Available
- CO_2 Input Sensor Available
- Field Assembled Hood Ships with Economizer
- Economizer Ships Complete for Downflow Duct Application.
- Optional Remote Minimum Position Potentiometer (270 ohm) (Honeywell #S963B1136) is Available from Prostock.
- Field Installed Power Exhaust Available
- Prewired for Smoke Detector
- If connected to a Building Automation System (BAS), all economizer functions can be viewed on the (BAS) or 16 x 2 LCD screen
- If connected to thermostat, all economizer functions can be viewed on 16 x 2 LCD screen

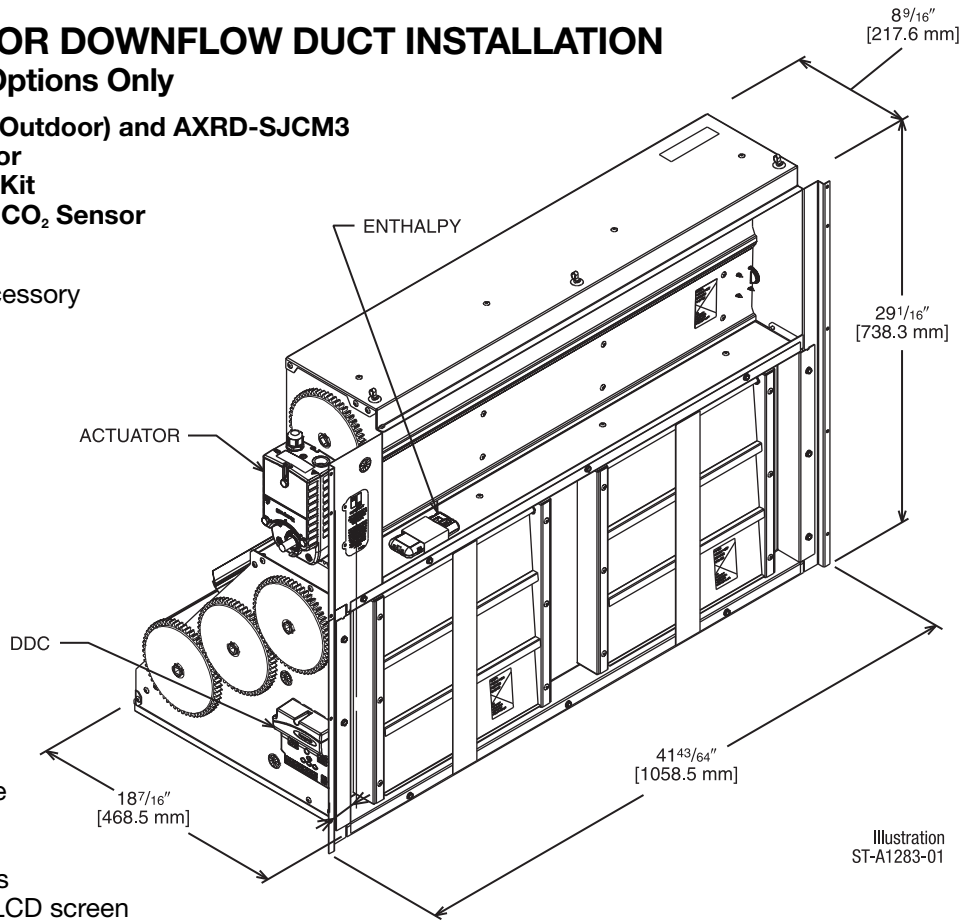

Illustration
ST-A1283-01

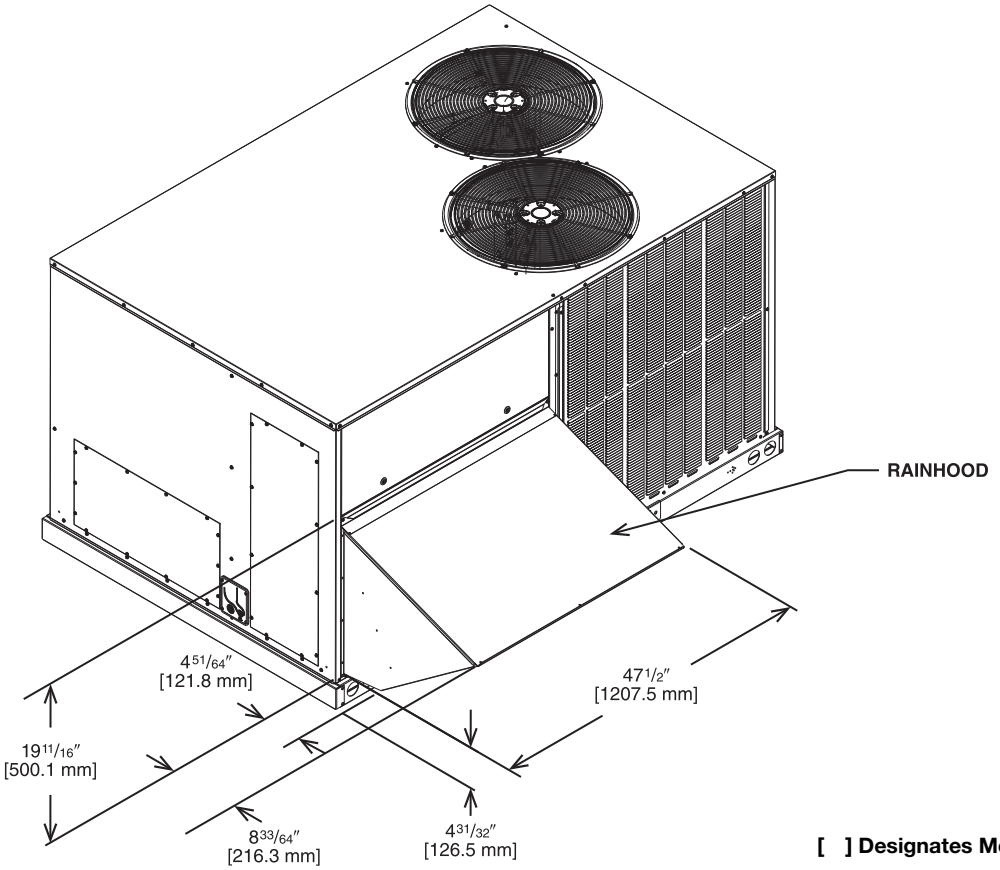

Illustration
ST-A1273-01_G-00

[ ] Designates Metric Conversions

NON-DDC ECONOMIZER FOR HORIZONTAL DUCT INSTALLATION

Field Installed Only

RXRD-01DAHM3—Single Enthalpy (Outdoor)
RXRX-BV01—Dual Enthalpy Upgrade Kit
RXRX-AR02—Wall-mounted CO_2 Sensor

- Features **Honeywell** Controls
- Available as a Field Installed Accessory Only
- Gear Driven Direct Drive Actuator
- Fully Modulating (0-100%)
- Low Leakage Dampers
- Slip-In Design for Easy Installation
- Standard Barometric Relief Damper
- Single Enthalpy with Dual Enthalpy Upgrade Kit Available
- CO_2 Input Sensor Available
- Field Assembled Hood Ships with Economizer
- Economizer Ships Complete for Hovrizontal Duct Application
- Optional Remote Minimum Position Potentiometer (270 ohm) (Honeywell #S963B1136) is Available from Prostock
- Field Installed Power Exhaust Available
- If connected to a Building Automation System (BAS), all economizer functions can be viewed on the (BAS) or 16 x 2 LCD screen
- If connected to thermostat, all economizer functions can be viewed on 16 x 2 LCD screen

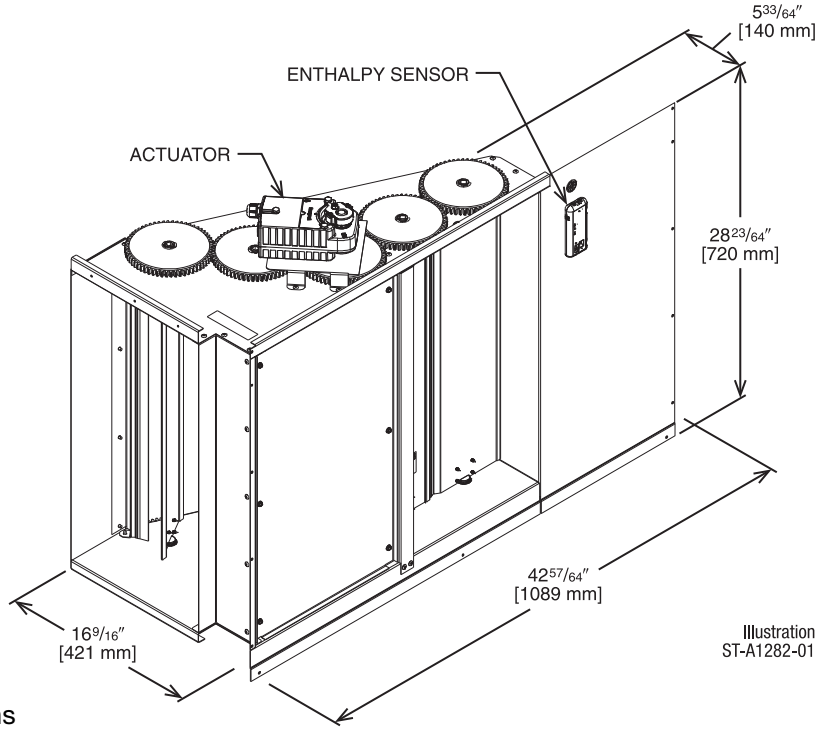

Illustration
ST-A1282-01

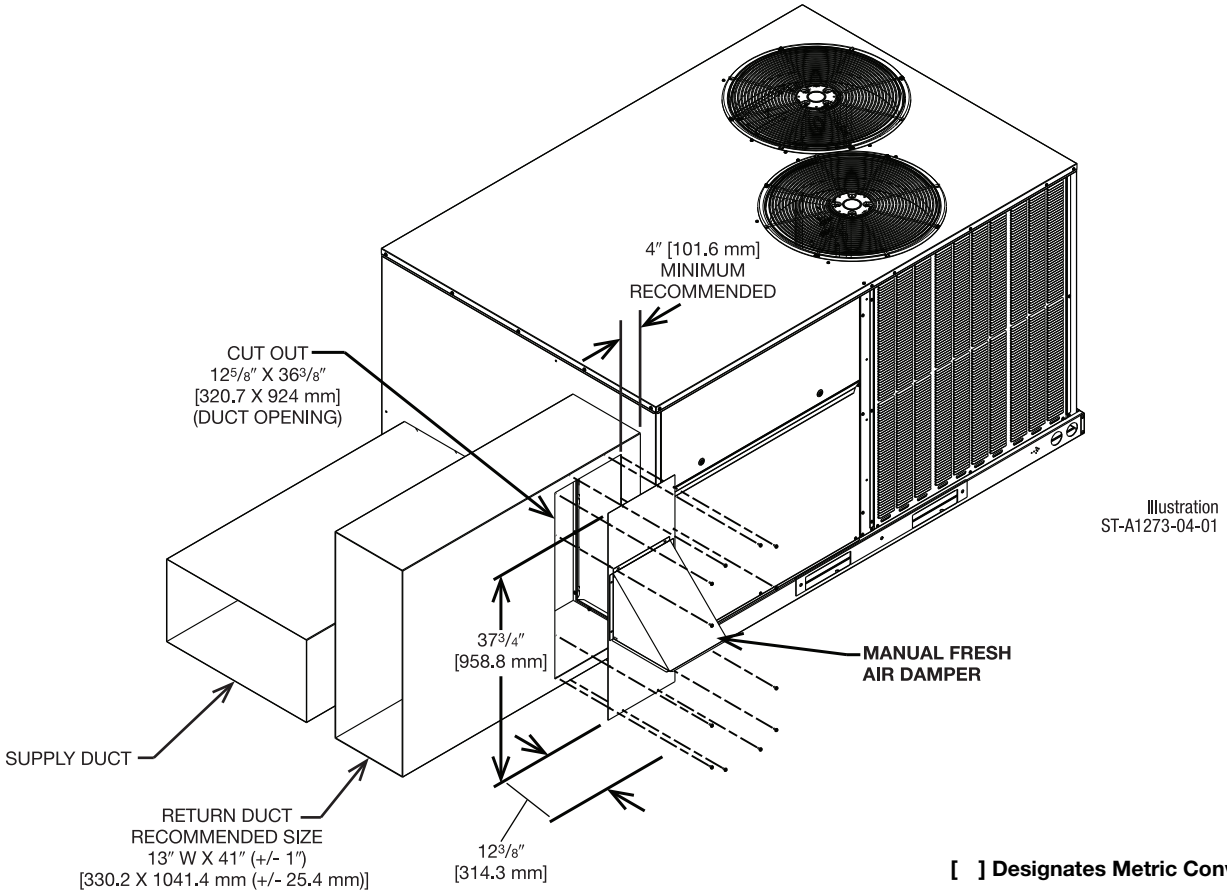

Illustration
ST-A1273-04-01

[ ] Designates Metric Conversions

POWER EXHAUST KIT FOR RXRD-01MDDAM3, RXRD-01MDDBM3, RXRD-01MDHAM3, RXRD-01MDHBM3 ECONOMIZERS

RXRX-CDF01

***Voltage Code**

VERTICAL AIRFLOW

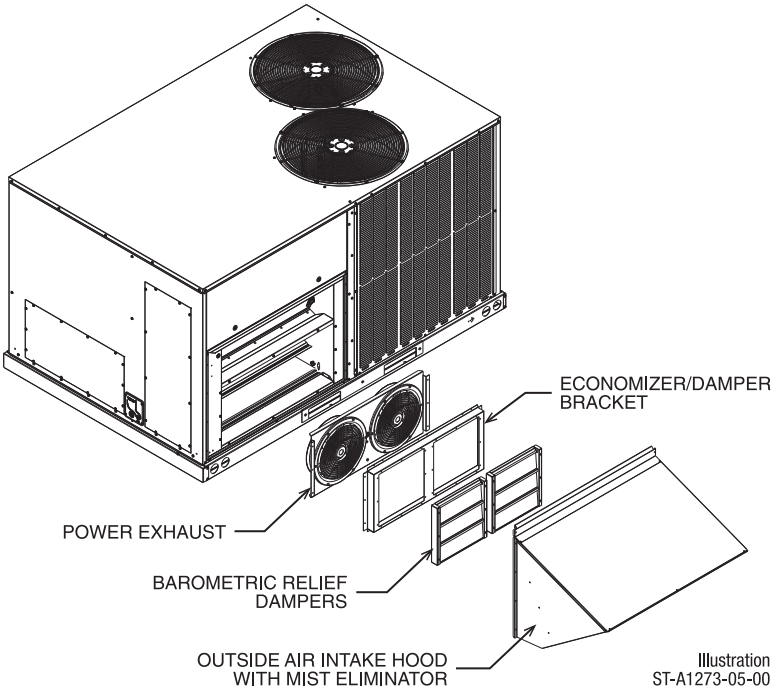

HORIZONTAL AIRFLOW

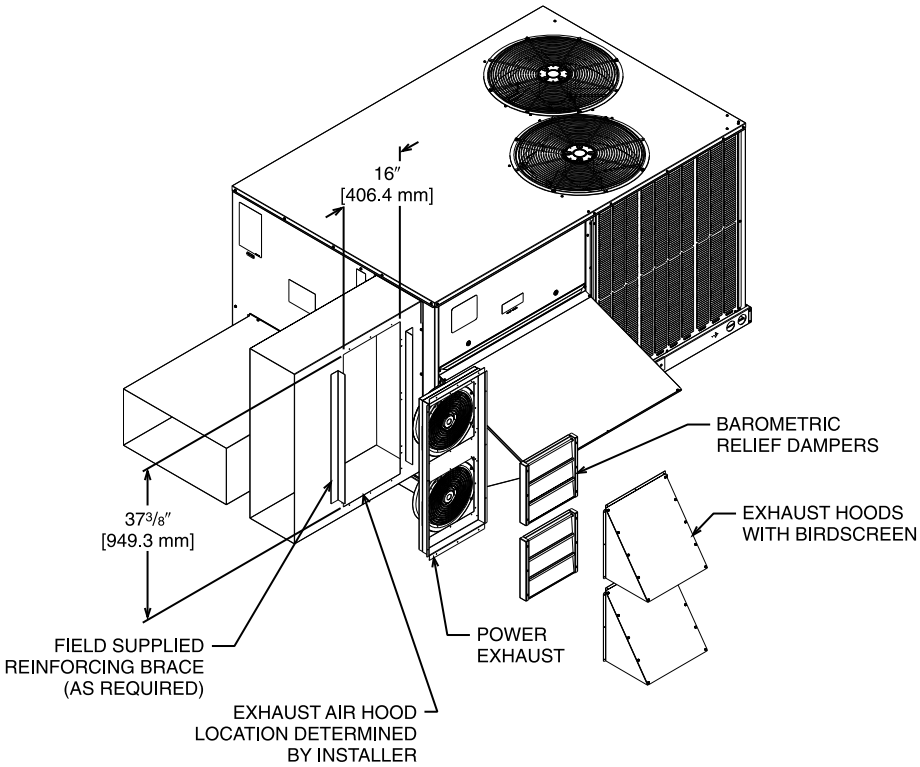

Model No.	No. of Fans	Volts	Phase	HP (ea.)	CFM [L/s]*	RPM	FLA (ea.)	LRA (ea.)
RXRX-CDF01C	2	208-230	1	0.47	2200	3000	1.55	1.1
RXRX-CDF01D	2	460	3	0.40	1970	2750	0.51	1.9

*CFM is per fan at 0" w.c. external static pressure.

[ ] Designates Metric Conversions

DDC—ECONOMIZER FOR DOWNFLOW DUCT INSTALLATION

Use to Select Field Installed Options Only

RXRD-01MDDBM3—Single Enthalpy (Outdoor)
RXRX-BV02—Dual Enthalpy Upgrade Kit
RXRX-AR02—Optional Wall-Mounted CO_2 Sensor

- Features **Honeywell** Controls
- Available Factory Installed or Field Accessory
- Gear Driven Direct Drive Actuator
- Fully Modulating (0-100%)
- Ultra Low Leak Dampers meet California Title 24 requirements
- Slip-In Design for Easy Installation
- Standard Barometric Relief Damper
- Single Enthalpy with Dual Enthalpy Upgrade Kit Available
- CO_2 Input Sensor Available
- Field Assembled Hood Ships with Economizer
- Economizer Ships Complete for Downflow Duct Application.
- Optional Remote Minimum Position Potentiometer (270 ohm) (Honeywell #S963B1136) is Available from Prostock.
- Field Installed Power Exhaust Available
- Prewired for Smoke Detector
- If connected to a Building Automation System (BAS), all economizer functions can be viewed on the (BAS), or 16 x 2 LCD screen
- If connected to thermostat, all economizer functions can be viewed on 16 x 2 LCD screen

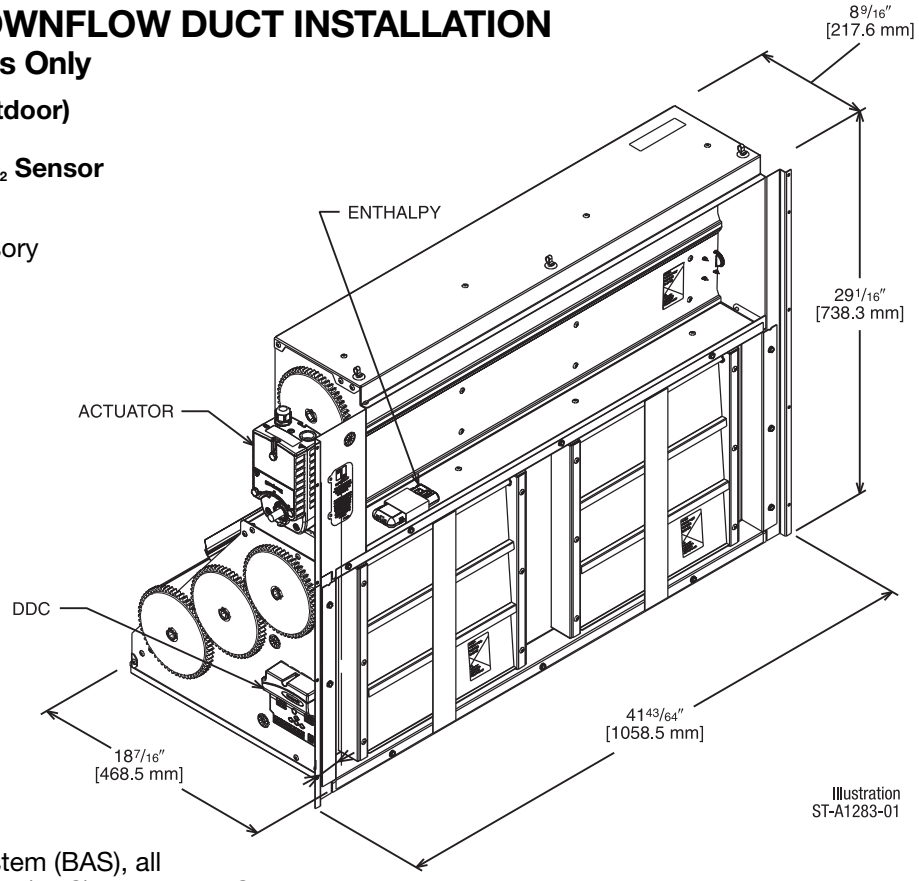

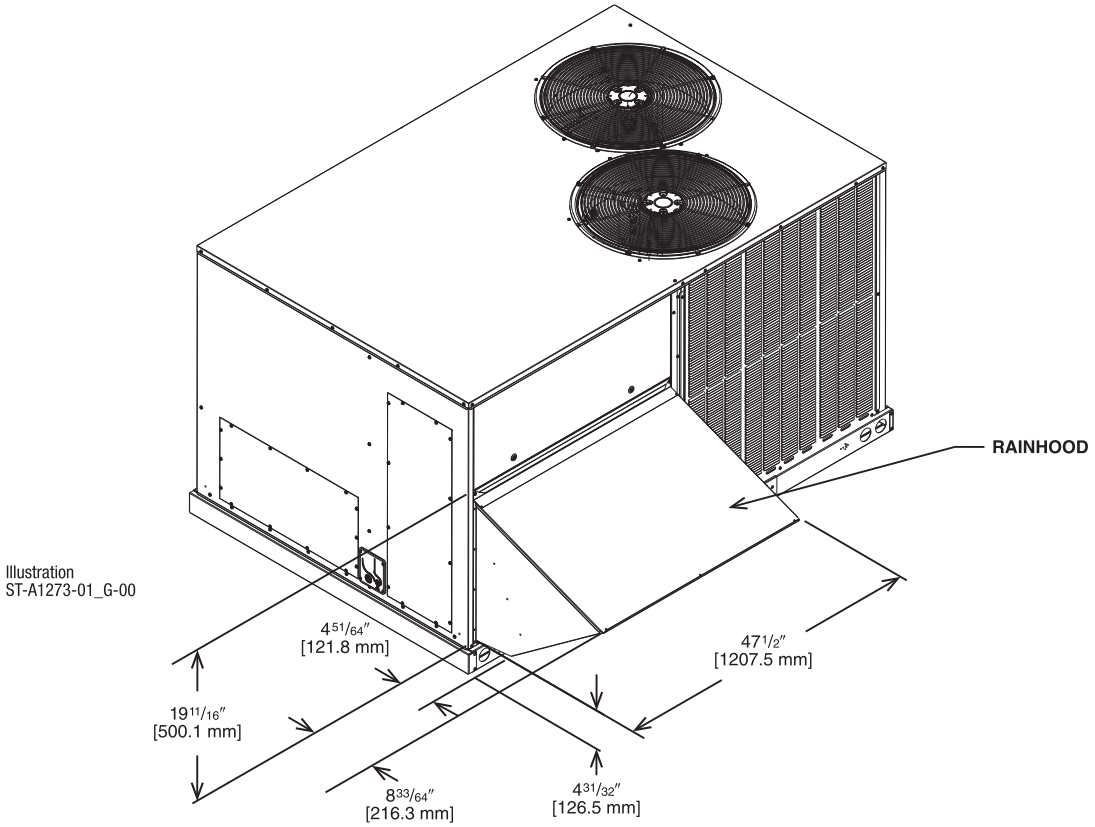

[ ] Designates Metric Conversions

DDC—ECONOMIZER FOR HORIZONTAL DUCT INSTALLATION

Field Installed Only

RXRD-01MDHBM3—Single Enthalpy (Outdoor)
RXRX-BV02—Dual Enthalpy Upgrade Kit
RXRX-AR02—Wall-mounted CO_2 Sensor

- Features **Honeywell** Controls
- Available as a Field Installed Accessory Only
- Gear Driven Direct Drive Actuator
- Fully Modulating (0-100%)
- Ultra Low Leak Dampers meet California Title 24 requirements
- Slip-In Design for Easy Installation
- Standard Barometric Relief Damper
- Single Enthalpy with Dual Enthalpy Upgrade Kit Available
- CO_2 Input Sensor Available
- Field Assembled Hood Ships with Economizer
- Economizer Ships Complete for Horizontal Duct Application
- Optional Remote Minimum Position Potentiometer (270 ohm) (Honeywell #S963B1136) is Available from Prostock
- Field Installed Power Exhaust Available
- If connected to a Building Automation System (BAS), all economizer functions can be viewed on the (BAS), or 16 x 2 LCD screen
- If connected to thermostat, all economizer functions can be viewed on 16 x 2 LCD screen

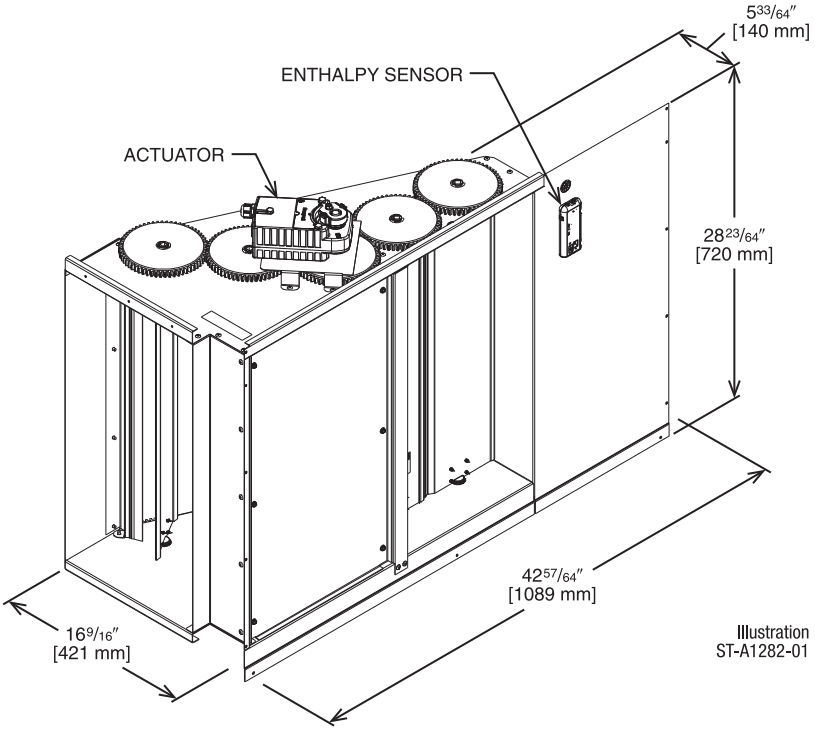

Illustration
ST-A1282-01

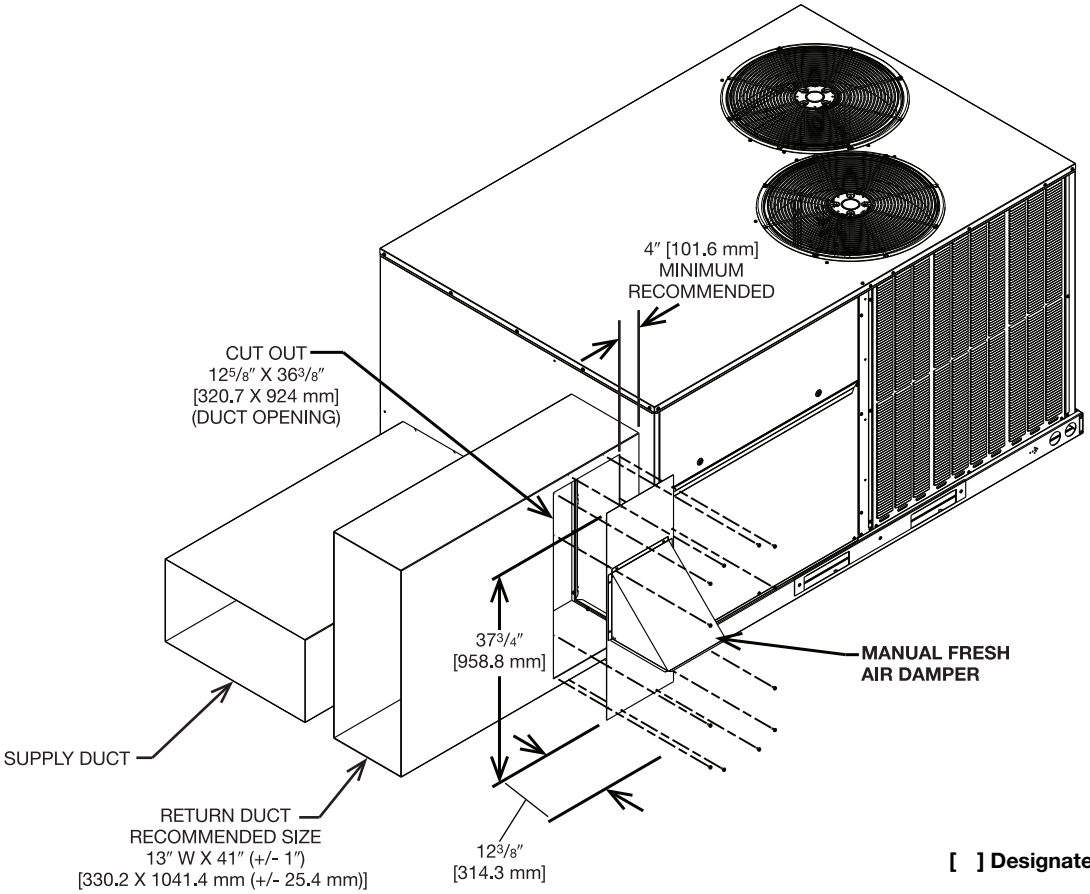

Illustration
ST-A1273-04-01

[ ] Designates Metric Conversions

FRESH AIR DAMPER

MOTORIZED DAMPER KIT
RXRF-ADB1

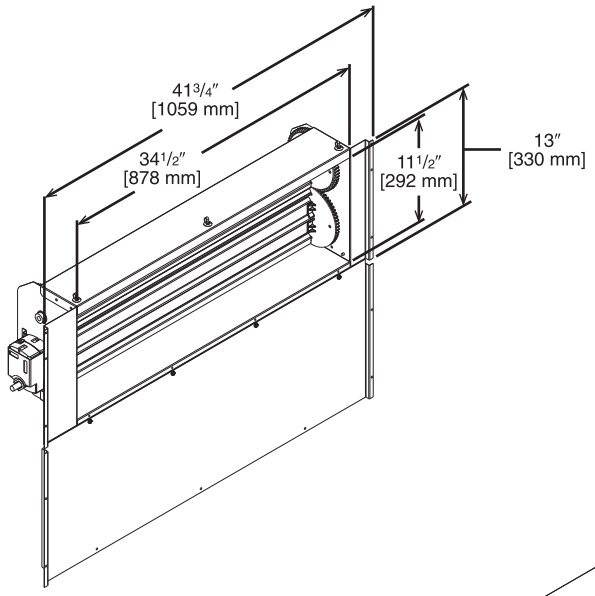

Illustration
ST-A1273-10-00

[ ] Designates Metric Conversions

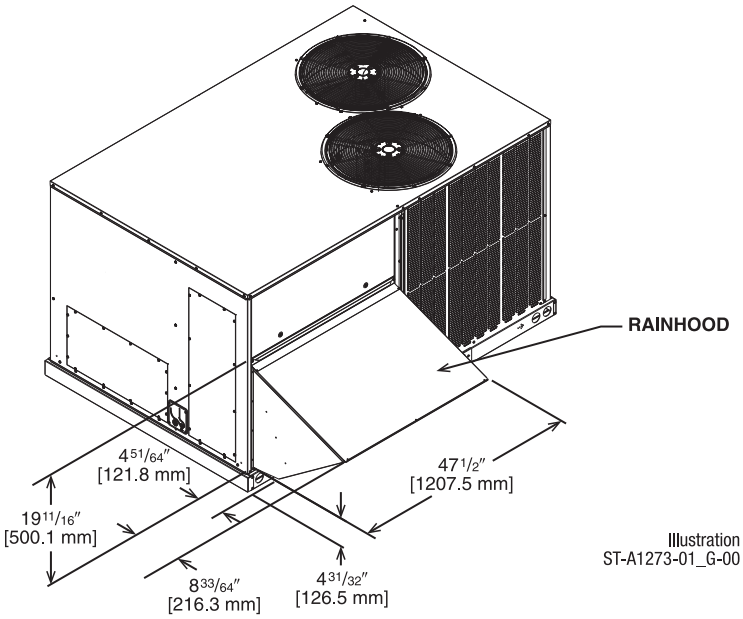

Illustration
ST-A1273-01_G-00

MOTORIZED DAMPER KIT
RXRX-ADC1
(Motor Kit for DDC Models)

RXRX-AW04
(Modulating Motor Kit w/position feedback for AXRF-KDA1)

- Features **Honeywell** Controls
- Gear Driven Direct Drive Actuator
- Fully Modulating (0-100%)
- Low Leakage Dampers
- Slip-In Design for Easy Installation
- Plug-In Polarized 12-pin and 4-pin Electrical Connections
- Pre-Configured—No Field Adjustments Necessary
- Addition of Dual Enthalpy Upgrade Kit allows limited economizer function
- CO_2 Sensor Input Available for Demand Control Ventilation (DCV)
- Optional Remote Minimum Position Potentiometer (270 ohm) (Honeywell #S963B1136) is available from Prostock
- All fresh air damper functions can be viewed at the RTU-C unit controller display
- If connected to a Building Automation System (BAS), all fresh air damper functions can be viewed on the (BAS)

[ ] Designates Metric Conversions

FRESH AIR DAMPER (Cont.)

RXRF-ADA1

DOWNFLOW APPLICATION

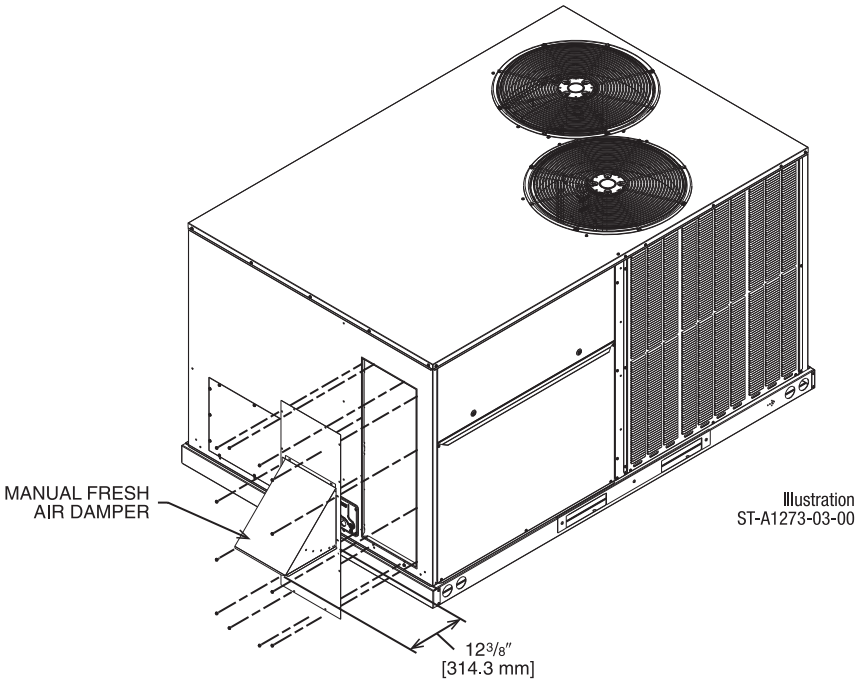

Illustration
ST-A1273-03-00

HORIZONTAL APPLICATION

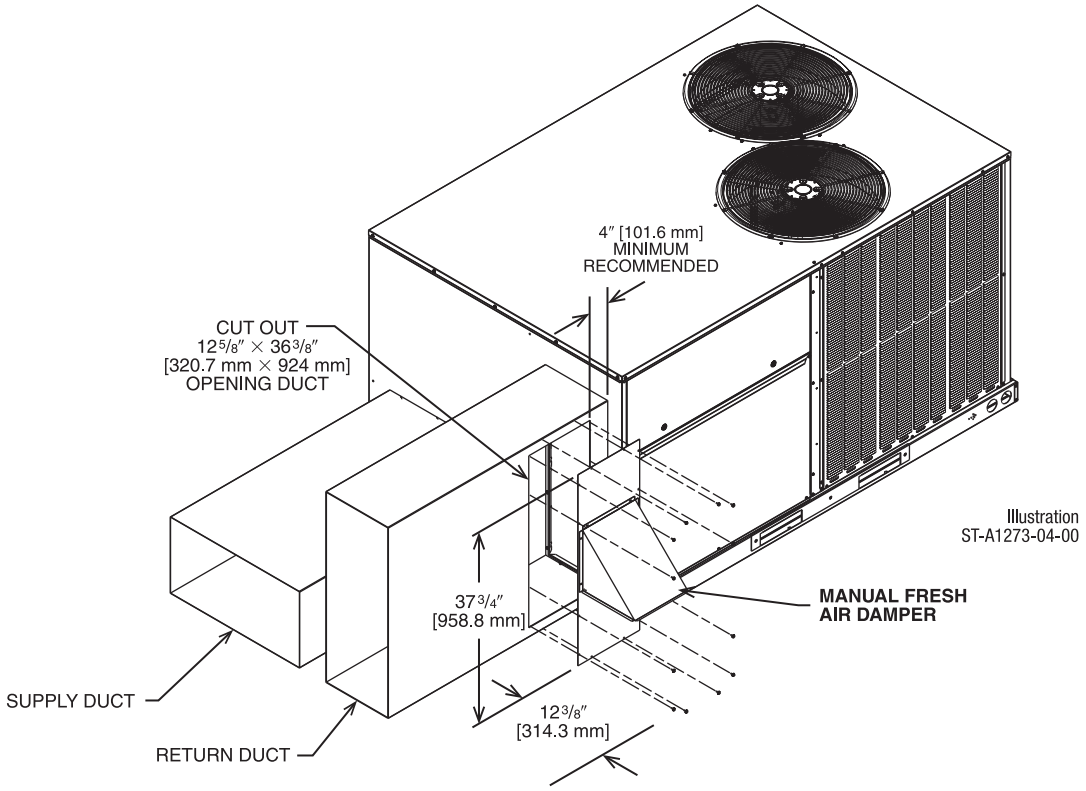

Illustration
ST-A1273-04-00

[ ] Designates Metric Conversions

ROOFCURBS (Full Perimeter)

- Rheem's roofcurb design can be utilized on all 7.5-10 ton [26.4-35.1 kW] RHPD.
- Two available heights (14" [356 mm] and 24" [610 mm]) for ALL models.
- Quick assembly corners for simple and fast assembly.
- Opening provided in bottom pan to match the "Thru the Curb" electrical connection opening provided on the unit base pan.
- 1" [25 mm] x 4" [102 mm] Nailer provided.
- Insulating panels not required because of insulated outdoor base pan.
- Sealing gasket (40' [12.2 m]) provided with Roofcurb.
- Packaged for easy field assembly.

Roofcurb Model	Height of Curb
RXKG-DDD14	14" [356 mm]
RXKG-DDD24	24" [610 mm]

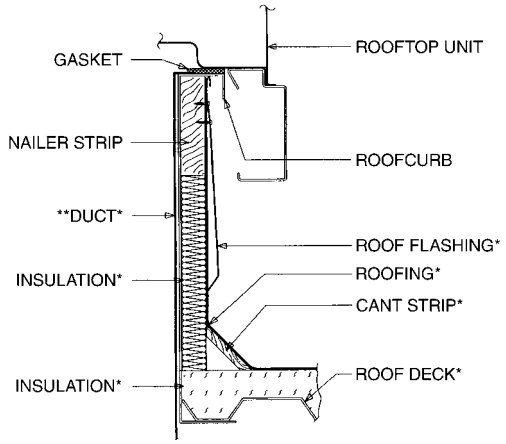

*BY CONTRACTOR
**FOR INSTALLATION OF DUCT AS SHOWN, USE RECOMMENDED DUCT SIZES FROM ROOFCURB INSTALLATION INSTRUCTIONS. FOR DUCT FLANGE ATTACHMENT TO UNIT, SEE UNIT INSTALLATION INSTRUCTIONS FOR RECOMMENDED DUCT SIZES.

Illustration
ST-A0743-02

ROOFCURB INSTALLATION

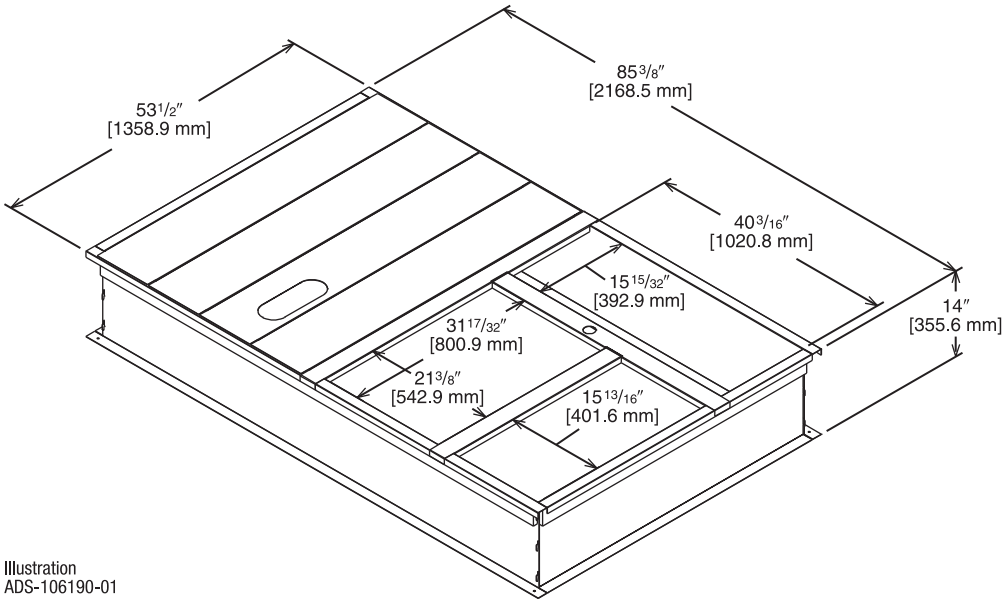

Illustration
ADS-106190-01

[ ] Designates Metric Conversions

ROOFCURB ADAPTERS (Cont.)

RXRX-DDCAE

Illustration
ADS-106176-01
SHEET 2

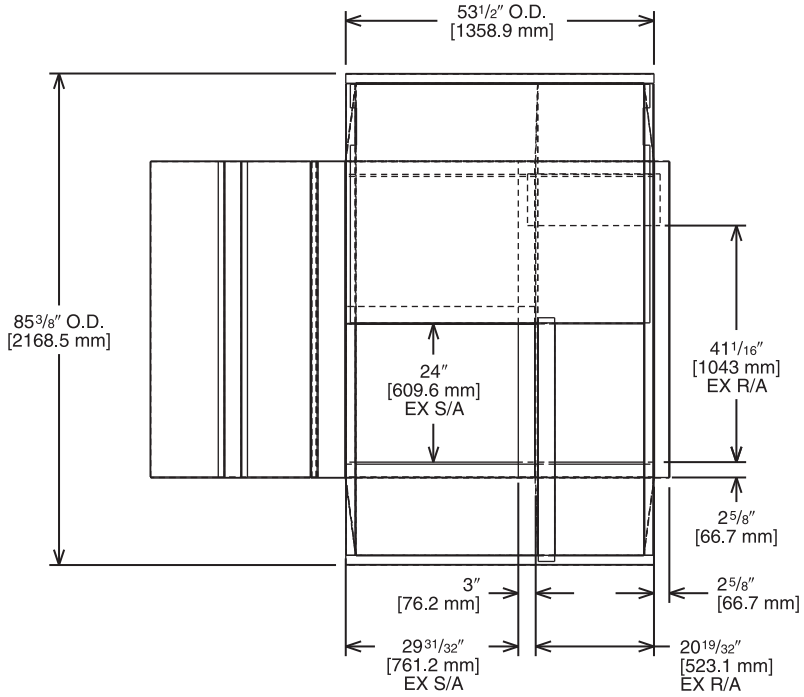

APPROXIMATE STATIC PRESSURE DROP

@2,000 = 0.06" w.g.
@3,000 = 0.12" w.g.
@4,000 = 0.22" w.g.
@5,000 = 0.36" w.g.

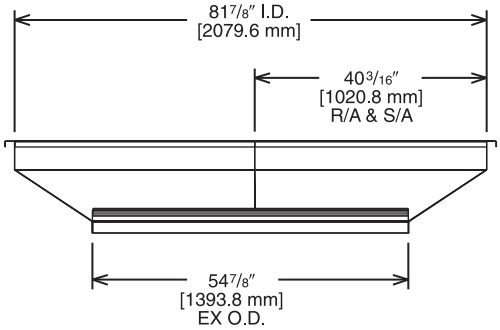

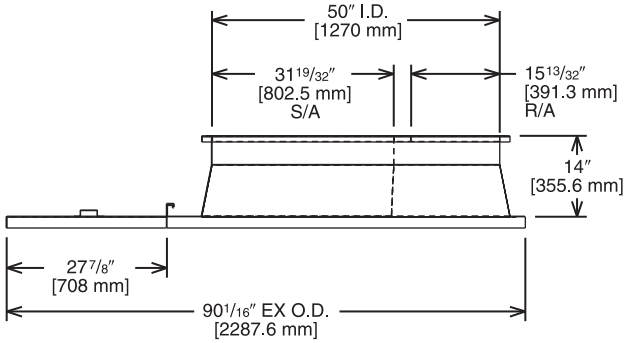

TOP VIEW

Illustration
ADS-106176-01
SHEET 1

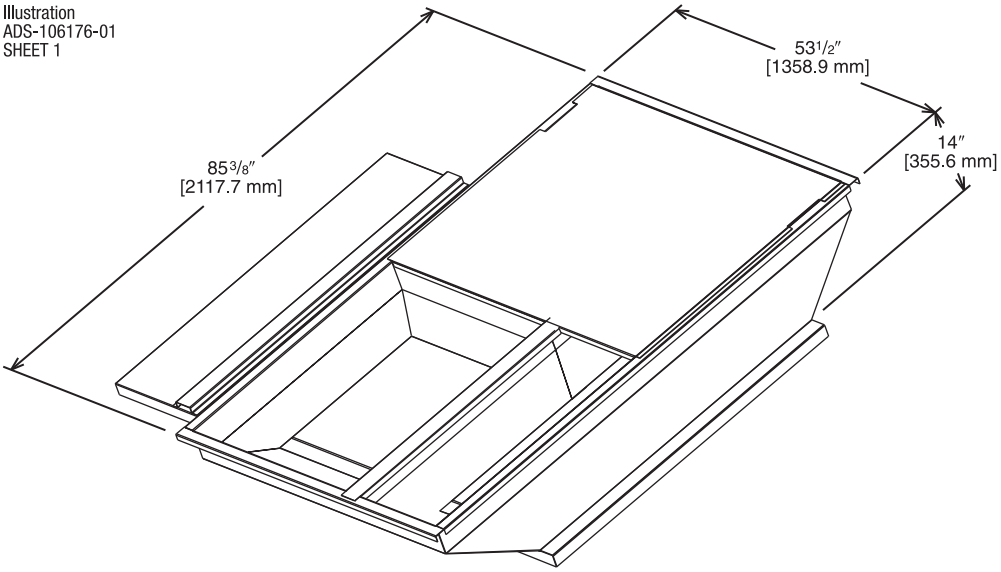

[ ] Designates Metric Conversions

CONCENTRIC DIFFUSER APPLICATION

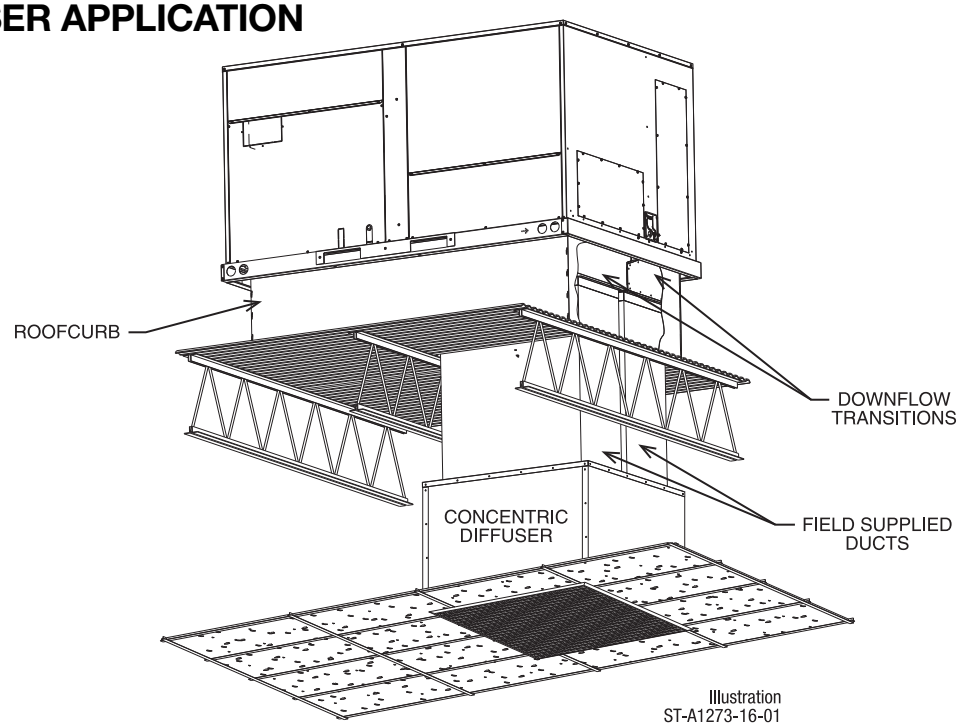

Illustration
ST-A1273-16-01

DOWNFLOW TRANSITION DRAWINGS

RXMC-DD02

- Used with RXRN-AEF3415 or RXRN-AED3415 Concentric Diffusers.

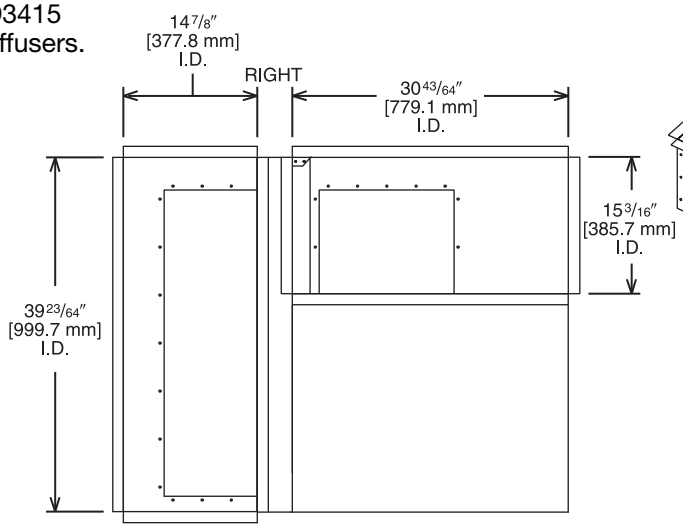

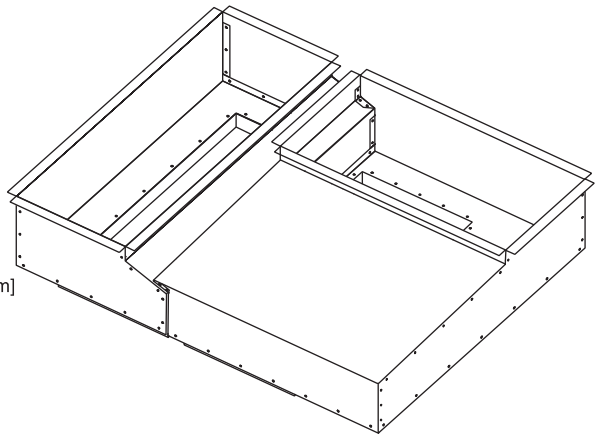

Illustration
ADS-106193-02

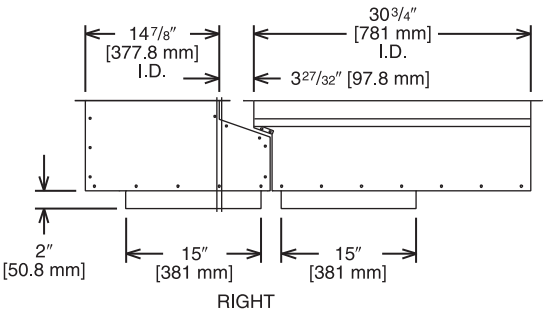

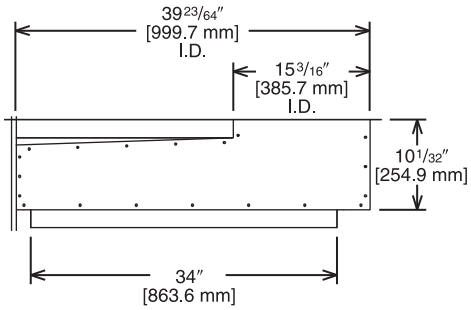

[ ] Designates Metric Conversions

DOWNFLOW TRANSITION DRAWINGS (Cont.)

RXMC-DD03

- Used with RXRN-AEF3618 or RXRN-AED3618 Concentric Diffusers.

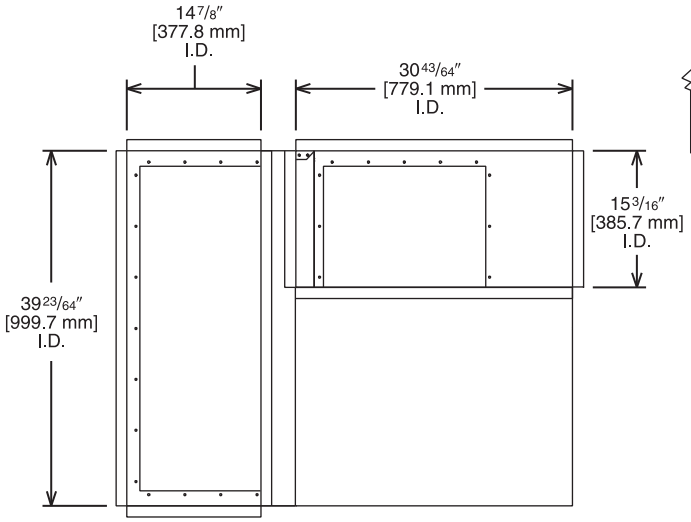

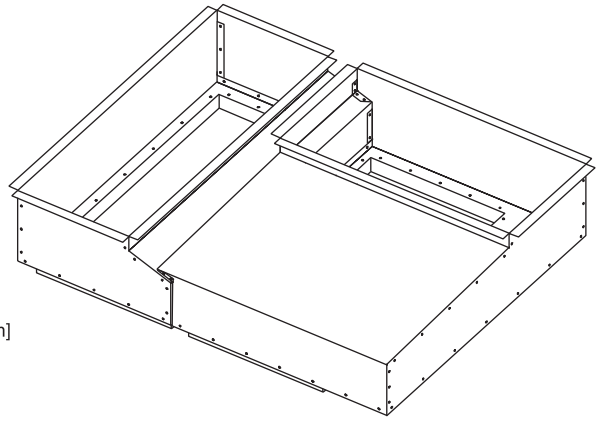

Illustration
ADS-106193-03

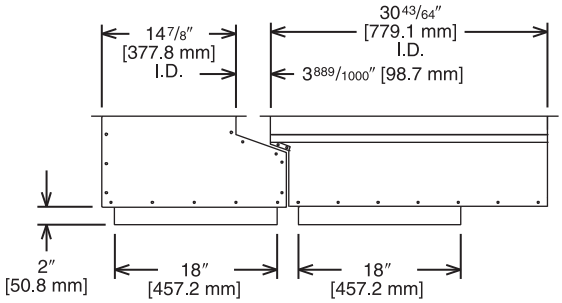

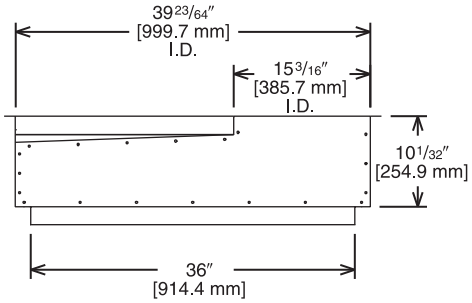

[ ] Designates Metric Conversions

DOWNFLOW TRANSITION DRAWINGS (Cont.)

RXMC-DD01

- Used with RXRN-AEF2000 or RXRN-AED2000 Concentric Diffusers.

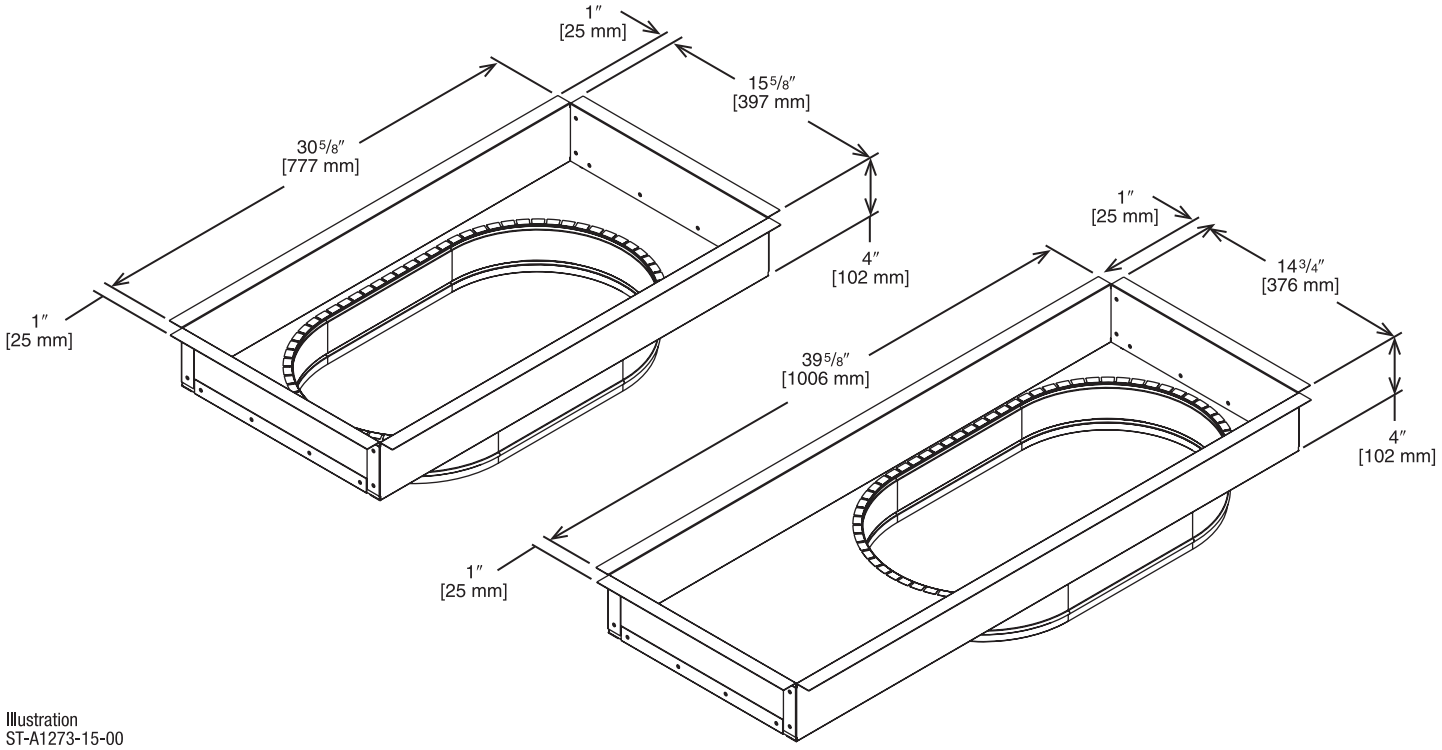

Illustration
ST-A1273-15-00

[ ] Designates Metric Conversions

CONCENTRIC DIFFUSER—STEP DOWN

RXRN-AED2000 (7.5 & 8.5 Ton [26.4 & 29.9 kW] Models)

For Use With Downflow Transition (RXMC-DD01) and 20" [508 mm] Round Supply and Return Ducts

- All aluminum diffuser with aluminum return air eggcrate.
- Built-in anti-sweat gasket.
- Molded fiberglass supports.
- Built-in hanging supports.
- Diffuser box constructed of sheetmetal insulated with 1" [25.4 mm] 1.5 lbs. [.7 kg] duct liner.

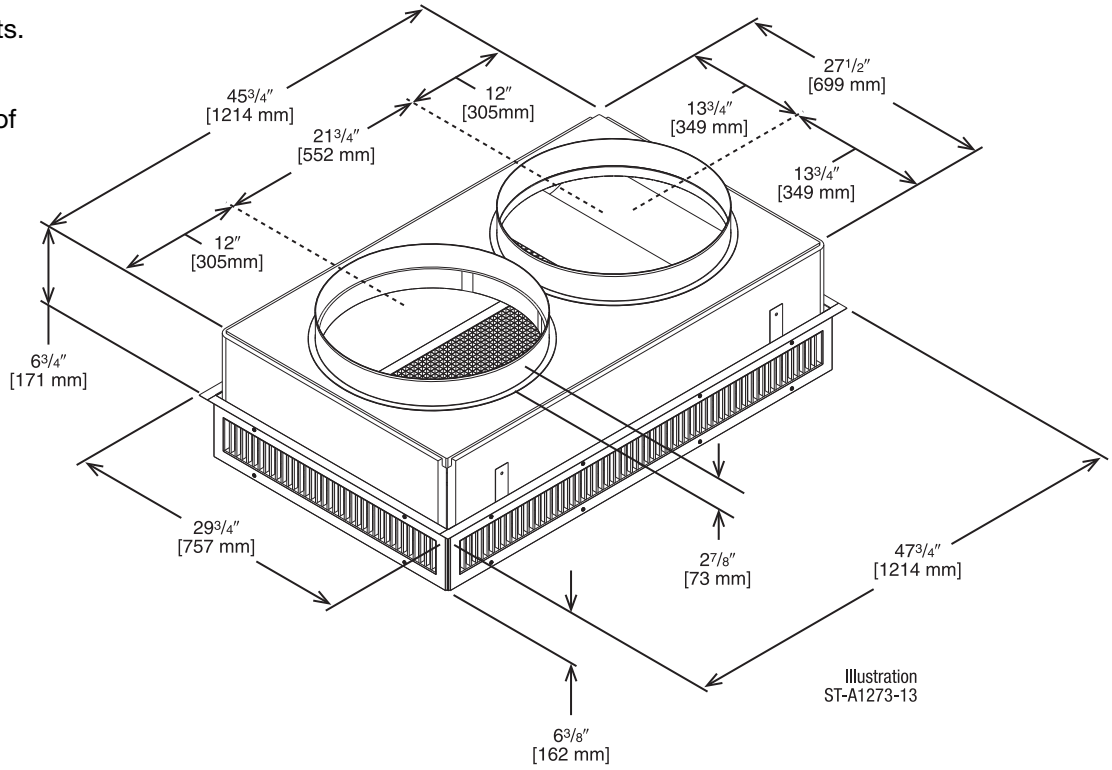

ENGINEERING DATA①

Model No.	Flow Rate CFM [L/s]	Throw ② ③ Feet [m]	Neck Velocity fpm [m/s]	Noise Level ④ (dbA)
RXRN-AED2000	2600 [1222]	22-39 [6.7-11.9]	669 [3.4]	32
	2800 [1316]	23-40 [7.1-12.2]	720 [3.7]	38
	3000 [1410]	25-42 [7.6-12.8]	772 [3.9]	40
	3200 [1504]	26-43 [7.9-13.1]	823 [4.2]	41
	3400 [1598]	27-45 [8.2-13.7]	874 [4.4]	42
	3600 [1692]	30-50 [9.1-15.2]	925.5 [4.7]	45
	3800 [1786]	32-53 [9.8-16.2]	976.8 [4.9]	48
	4000 [1880]	34-56 [10.4-17.1]	1028.1 [5.2]	50

NOTES: ① All data is based on the air diffusion council guidelines.
② Throw data is based on 75 FPM Terminal Velocities using isothermal air.
③ Throw is based on diffuser blades being directed in a straight pattern.
④ Actual noise levels may vary due to duct design and do not include transmitted unit noise. Adequate duct attenuation must be provided to reduce sound output from the unit.

[ ] Designates Metric Conversions

CONCENTRIC DIFFUSER—STEP DOWN 15" x 34" [381 x 836 mm]

RXRN-AED3415 (8.5 & 10 Ton [29.9 kW & 35.2] Models)

For Use With Downflow Transition (RXMC-DD02) and 15" x 34" [381 x 836 mm] Supply and Return Ducts

- All aluminum diffuser with aluminum return air eggcrate.
- Built-in anti-sweat gasket.
- Molded fiberglass supports.
- Built-in hanging supports.
- Diffuser box constructed of sheetmetal insulated with 1" [25.4 mm] 1.5 lbs. [.7 kg] duct liner.
- Double deflection diffuser with the blades secured by spring steel.

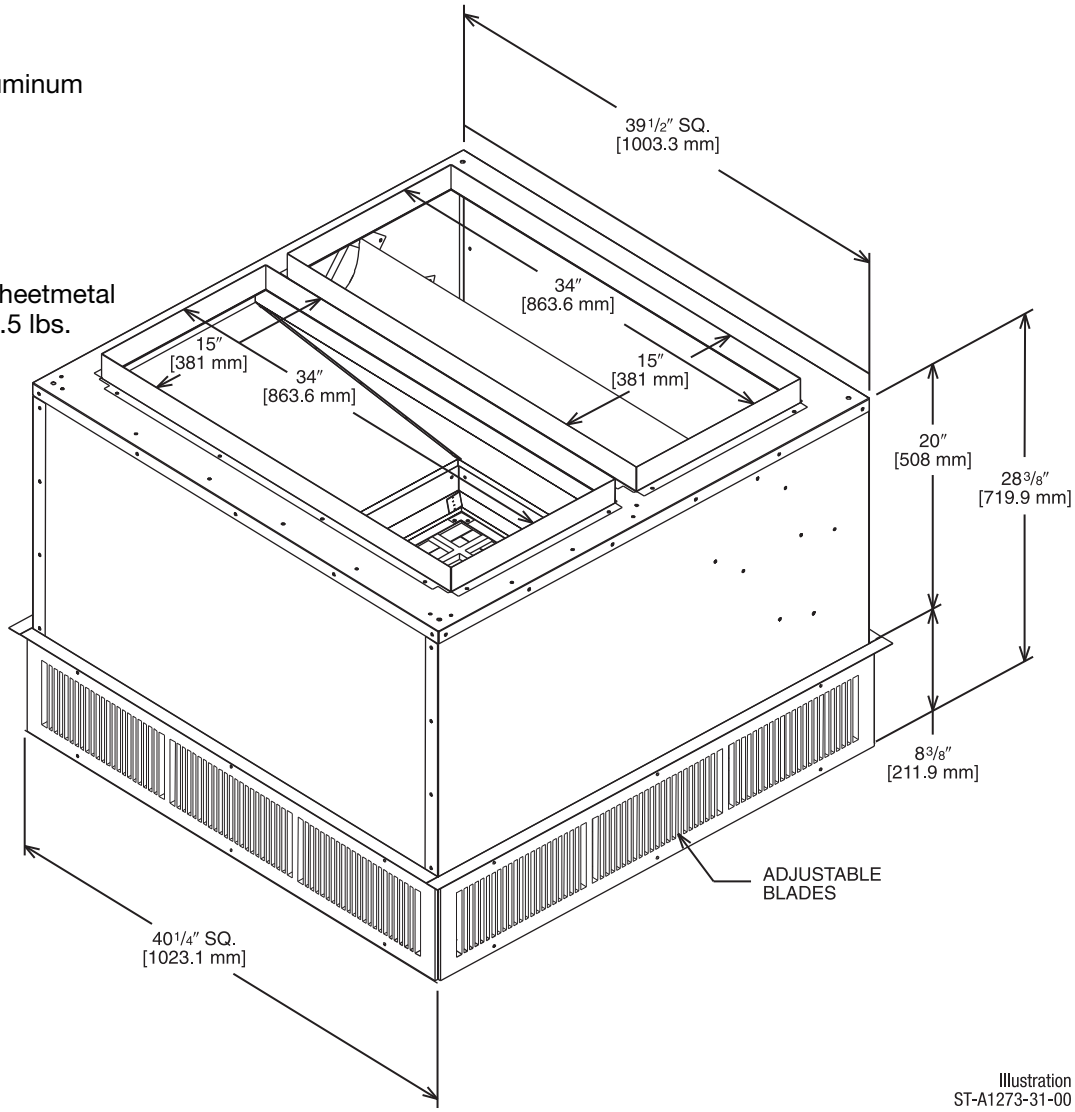

Illustration
ST-A1273-31-00

ENGINEERING DATA①

Model No.	Flow Rate CFM [L/s]	Throw ② ③ Feet [m]	Neck Velocity fpm [m/s]	Noise Level ④ (dbA)
RXRN-AED3415	3600 [1692]	26-53 [7.9-16.2]	851 [4.3]	27
	3800 [1786]	27-55 [8.2-16.8]	898 [4.5]	29
	4000 [1880]	29-58 [8.8-17.7]	946 [4.8]	30
	4200 [1974]	31-61 [9.4-18.6]	993 [5.1]	32
	4400 [2068]	32-64 [9.8-19.5]	1040 [5.3]	33
	4600 [2162]	34-66 [10.4-20.1]	1087.5 [5.5]	35

NOTES: ① All data is based on the air diffusion council guidelines.
② Throw data is based on 75 FPM Terminal Velocities using isothermal air.
③ Throw is based on diffuser blades being directed in a straight pattern.
④ Actual noise levels may vary due to duct design and do not include transmitted unit noise. Adequate duct attenuation must be provided to reduce sound output from the unit.

[ ] Designates Metric Conversions

CONCENTRIC DIFFUSER—STEP DOWN 18" x 36" [457 x 914 mm]

RXRN-AED3618 (12.5 & 15 Ton [44.0 & 52.8 kW] Models)

For Use With Downflow Transition (RXMC-DD03) and 18" x 36" [457 x 914 mm] Supply and Return Ducts

- All aluminum diffuser with aluminum return air eggcrate.
- Built-in anti-sweat gasket.
- Molded fiberglass supports.
- Built-in hanging supports.
- Diffuser box constructed of sheetmetal insulated with 1" [25.4 mm] 1.5 lbs. [.7 kg] duct liner.
- Double deflection diffuser with the blades secured by spring steel.

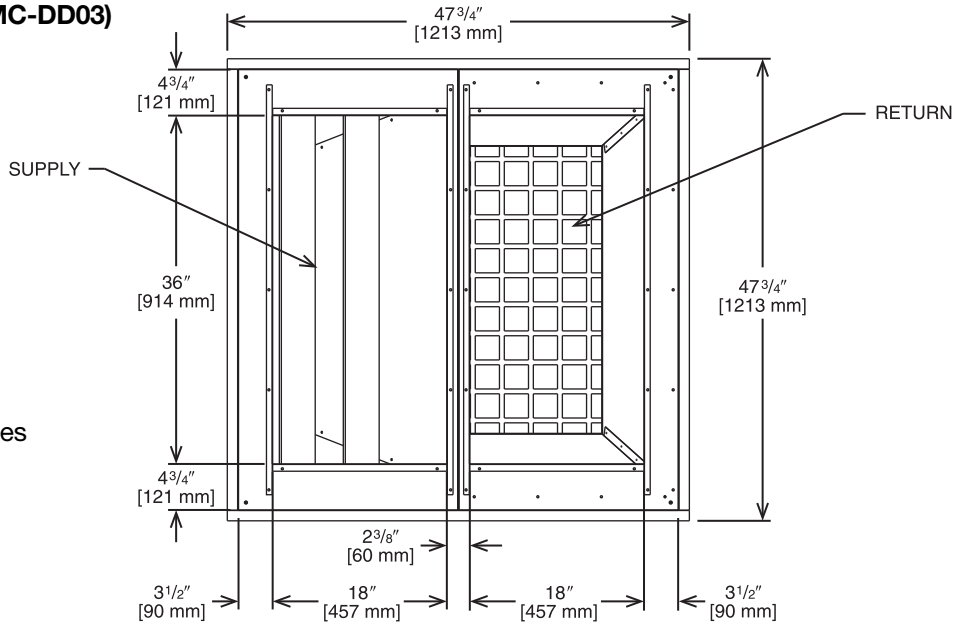

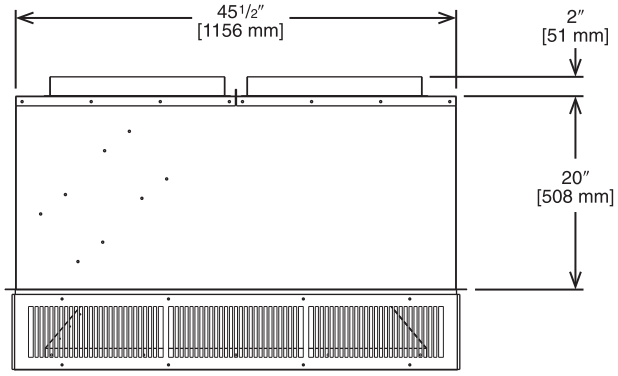

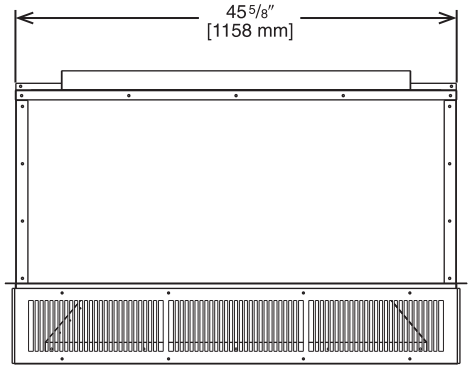

Illustration
ST-A1273-11-00

ENGINEERING DATA①

Model No.	Flow Rate CFM [L/s]	Throw ② ③ Feet [m]	Neck Velocity fpm [m/s]	Noise Level ④ (dbA)
RXRN-AED3618	4400 [2068]	29-55 [8.8-16.8]	841 [4.3]	26
	4600 [2162]	31-57 [9.4-17.4]	875 [4.4]	28
	4800 [2256]	32-60 [9.8-18.3]	915 [4.6]	29
	5000 [2350]	33-62 [10.1-18.9]	951 [4.8]	30
	5200 [2444]	34-65 [10.4-19.8]	988 [5.1]	31
	5400 [2538]	36-67 [10.9-20.4]	1025 [5.2]	32

NOTES: ① All data is based on the air diffusion council guidelines.
② Throw data is based on 75 FPM Terminal Velocities using isothermal air.
③ Throw is based on diffuser blades being directed in a straight pattern.
④ Actual noise levels may vary due to duct design and do not include transmitted unit noise. Adequate duct attenuation must be provided to reduce sound output from the unit.

[ ] Designates Metric Conversions

FLUSH MOUNT CONCENTRIC DIFFUSER—FLUSH

RXRX-AEF2000 (7.5 & 8.5 Ton [26.4 & 29.9 kW] Models)

For Use With Downflow Transition (RXMC-DD01)
20" [508 mm] Round Supply and Return Ducts

- All aluminum diffuser with aluminum return air eggcrate.
- Built-in anti-sweat gasket.
- Molded fiberglass supports.
- Built-in hanging supports.
- Diffuser box constructed of sheetmetal insulated with 1" [25.4 mm] 1.5 lbs. [.7 kg] duct liner.

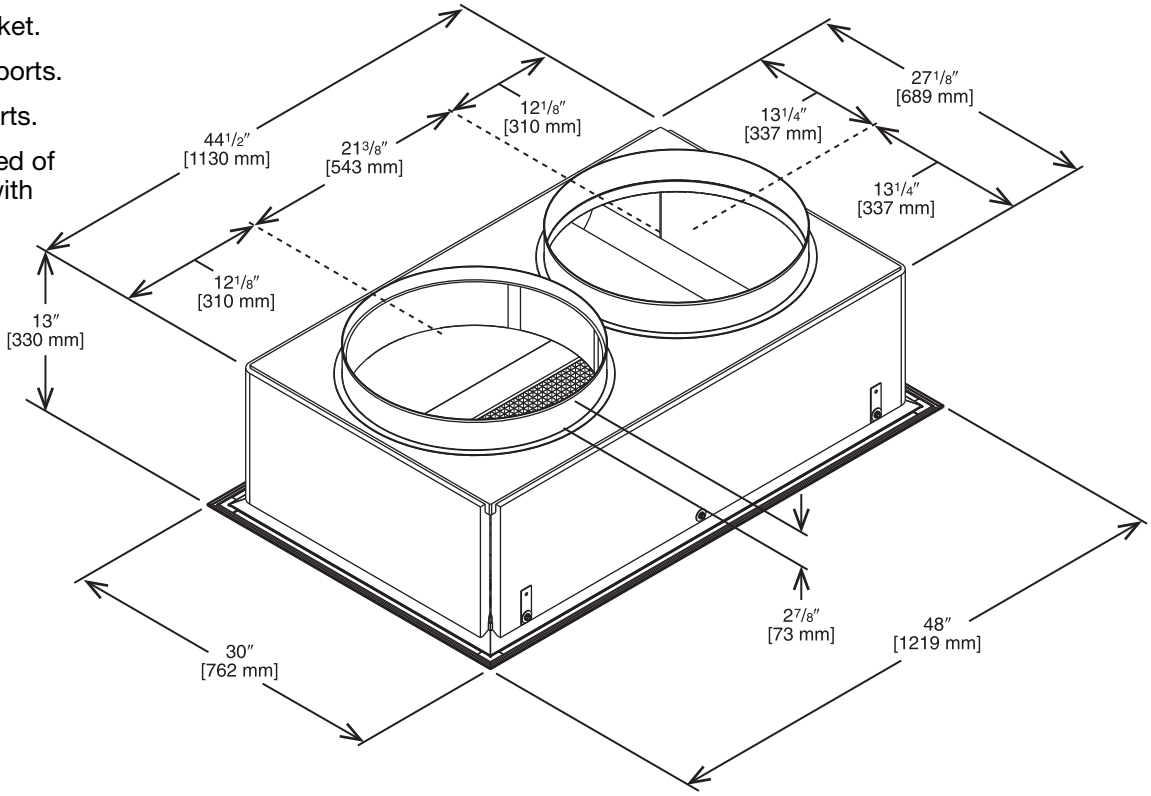

Illustration
ST-A1273-14-00

ENGINEERING DATA①

Model No.	Flow Rate CFM [L/s]	Throw ② ③ Feet [m]	Neck Velocity fpm [m/s]	Noise Level ④ (dbA)
RXRN-AEF2000	2600 [1222]	17-24 [5.2-7.3]	663 [3.4]	30
	2800 [1316]	18-28 [5.5-8.5]	714 [3.6]	35
	3000 [1410]	20-30 [6.1-9.1]	765 [3.9]	35
	3200 [1504]	22-33 [6.7-10.1]	816 [4.1]	40
	3400 [1598]	23-37 [7-11.3]	867 [4.4]	40
	3600 [1692]	25-38 [7.6-11.6]	918 [4.7]	43
	3800 [1786]	26-39 [7.9-11.9]	969 [4.9]	45
	4000 [1880]	27-40 [8.2-12.2]	1020 [5.2]	48

NOTES: ① All data is based on the air diffusion council guidelines.
② Throw data is based on 75 FPM Terminal Velocities using isothermal air.
③ Throw is based on diffuser blades being directed in a straight pattern.
④ Actual noise levels may vary due to duct design and do not include transmitted unit noise. Adequate duct attenuation must be provided to reduce sound output from the unit.

[ ] Designates Metric Conversions

CONCENTRIC DIFFUSER—FLUSH 15" x 34" [381 x 864 mm]

RXRN-AEF3415 (8.5 & 10 Ton [29.9 & 35.2] Models)

For Use With Downflow Transition (RXMC-DD02)
15" x 34" [381 x 864 mm]
Supply and Return Ducts

- All aluminum diffuser with aluminum return air eggcrate.
- Built-in anti-sweat gasket.
- Molded fiberglass supports.
- Built-in hanging supports.
- Diffuser box constructed of sheetmetal insulated with 1" [25.4 mm] 1.5 lbs. [.7 kg] duct liner.

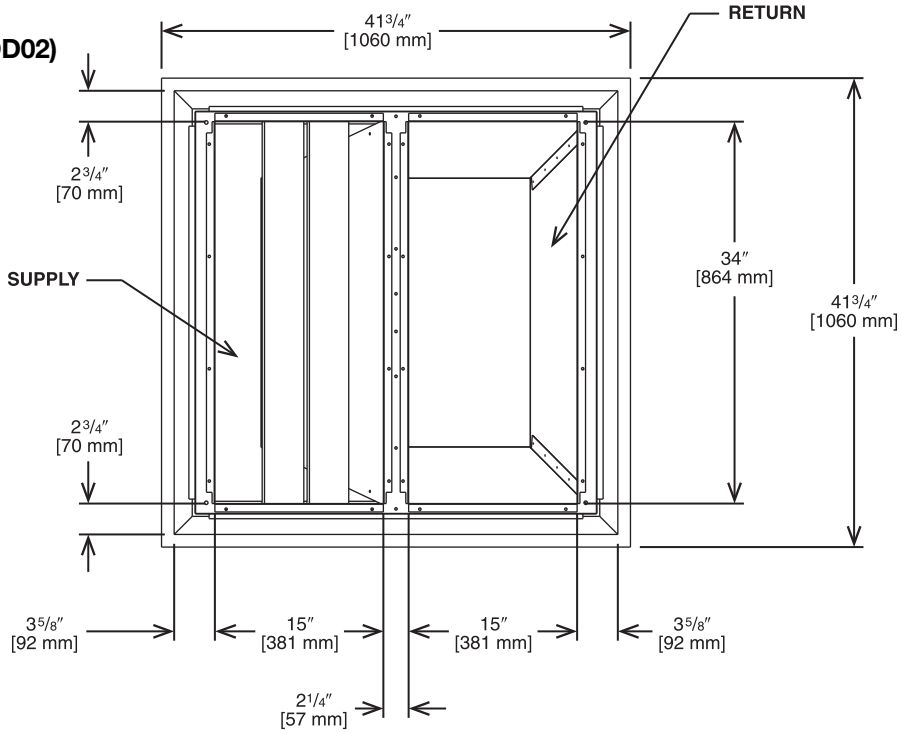

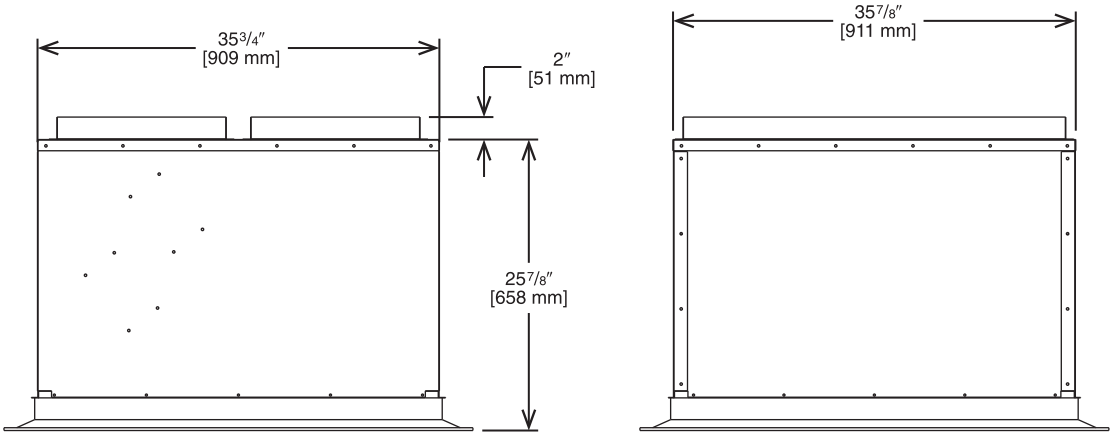

Illustration
ST-A1273-07-00

ENGINEERING DATA①

Model No.	Flow Rate CFM [L/s]	Throw ② ③ Feet [m]	Neck Velocity fpm [m/s]	Noise Level ④ (dbA)
RXRN-AEF3415	3600 [1692]	14-34 [4.3-10.4]	844 [4.3]	27
	3800 [1786]	15-36 [4.6-11.1]	891 [4.5]	29
	4000 [1880]	16-37 [4.9-11.3]	938 [4.8]	30
	4200 [1974]	17-39 [5.2-11.9]	985 [5.1]	32
	4400 [2068]	18-41 [5.5-12.5]	1032 [5.2]	33
	4600 [2162]	19-43 [5.8-13.1]	1079 [5.5]	35
	4800 [2256]	20-45 [6.1-13.7]	1126 [5.7]	36

NOTES: ① All data is based on the air diffusion council guidelines.
② Throw data is based on 75 FPM Terminal Velocities using isothermal air.
③ Throw is based on diffuser blades being directed in a straight pattern.
④ Actual noise levels may vary due to duct design and do not include transmitted unit noise. Adequate duct attenuation must be provided to reduce sound output from the unit.

[ ] Designates Metric Conversions

CONCENTRIC DIFFUSER—FLUSH 18" x 36" [457 x 914 mm]

RXRN-AEF3618 (12.5 Ton [44.0 kW] Models)

For Use With Downflow Transition (RXMC-DD03) and 18" x 36" [457 x 914 mm] Supply and Return Ducts

- All aluminum diffuser with aluminum return air eggcrate.
- Built-in anti-sweat gasket.
- Molded fiberglass supports.
- Built-in hanging supports.
- Diffuser box constructed of sheetmetal insulated with 1" [25.4 mm] 1.5 lbs. [.7 kg] duct liner.

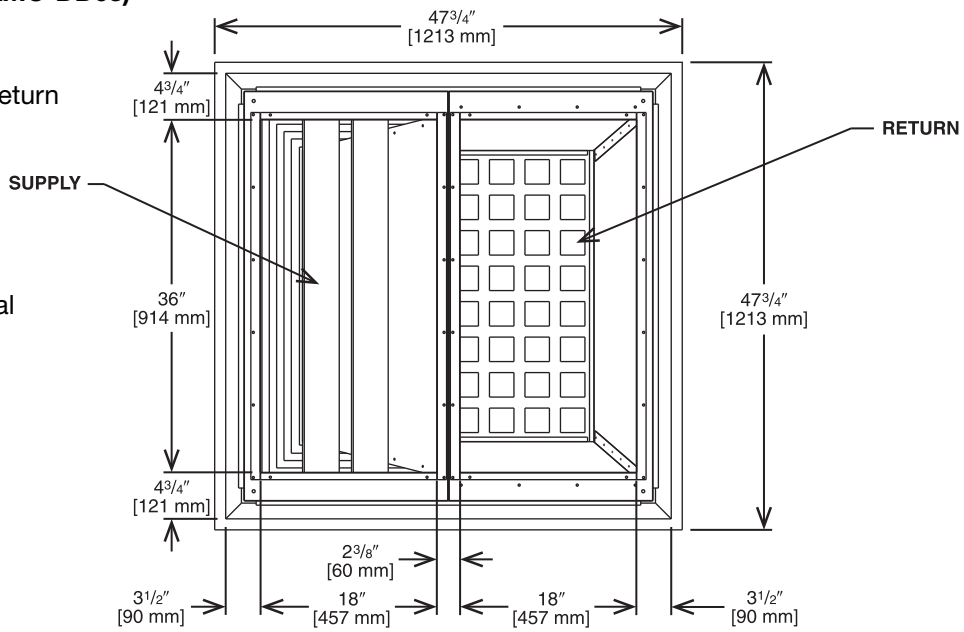

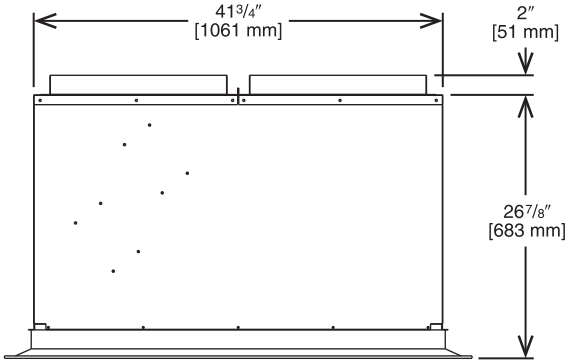

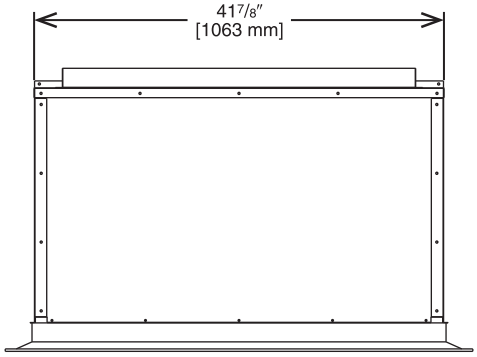

Illustration
ST-A1273-12-00

ENGINEERING DATA①

Model No.	Flow Rate CFM [L/s]	Throw ② ③ Feet [m]	Neck Velocity fpm [m/s]	Noise Level ④ (dbA)
RXRN-AEF3618	4400 [2068]	13-28 [4.1-8.5]	922 [47]	35
	4600 [2162]	14-30 [4.3-9.1]	962 [4.9]	37
	4800 [2256]	15-31 [4.6-9.4]	1002 [5.1]	39
	5000 [2350]	16-32 [4.9-9.8]	1043 [5.3]	40
	5200 [2444]	17-33 [5.2-10.1]	1083 [5.5]	42
	5400 [2538]	18-35 [5.5-10.7]	1123 [5.7]	43

NOTES: ① All data is based on the air diffusion council guidelines.
② Throw data is based on 75 FPM Terminal Velocities using isothermal air.
③ Throw is based on diffuser blades being directed in a straight pattern.
④ Actual noise levels may vary due to duct design and do not include transmitted unit noise. Adequate duct attenuation must be provided to reduce sound output from the unit.

[ ] Designates Metric Conversions

GUIDE SPECIFICATIONS – RHPD-090 thru 120

You may copy this document directly into your building specification. This specification is written to comply with the 2016 version of the "master format" as published by the Construction Specification Institute. www.csinet.org.

ELECTRIC HEAT PACKAGED ROOFTOP

HVAC Guide Specifications

Size Range: 7.5 to 10 Nominal Tons

Section Description

23 06 80 Schedules for Decentralized HVAC Equipment

23 06 80.13 Decentralized Unitary HVAC Equipment Schedule

23 06 80.13.A. Rooftop unit schedule

1. Schedule is per the project specification requirements.

23 07 16 HVAC Equipment Insulation

23 07 16.00.A Decentralized, Rooftop Units:

1. Interior cabinet surfaces shall be insulated with a minimum 1/2-in. thick, minimum 1.6 lb density, flexible fiberglass insulation bonded with a phenolic binder, with aluminum foil facing on the air side.
2. Insulation and adhesive shall meet NFPA 90A requirements for flame spread and smoke generation.

23 09 13 Instrumentation and Control Devices for HVAC

23 09 13.23 Sensors and Transmitters

23 09 13.23.A. Thermostats

1. Thermostat must
   a. have capability to energize 2 different stages of cooling, and 2 different stages of heating.
   b. must include capability for occupancy scheduling.

23 09 23 Direct-Digital Control System for HVAC

23 09 23.00.A. RTU-C controller

1. Shall be ASHRAE 62-2001 compliant.
2. Shall accept 18-32VAC input power.
3. Shall have an operating temperature range from −40ºF (−40ºC) to 158ºF (70ºC), 10%–95% RH (non-condensing).
4. Controller shall accept the following inputs: space temperature, setpoint adjustment, outdoor air temperature, indoor air quality, outdoor air enthalpy, fire shutdown, return air enthalpy, fan status, remote time clock/door switch.
5. Shall accept a CO2 sensor in the conditioned space, and be Demand Control Ventilation (DCV) ready.
6. Shall provide the following outputs: Economizer, fan, cooling stage 1, cooling stage 2, heat stage 1, heat stage 2, exhaust, occupied.
7. Unit shall provide surge protection for the controller through a circuit breaker.
8. Shall have a field installed communication card allowing the unit to be Internet capable, and communicate at a Baud rate of 19.2K or faster
9. Shall have an LED display independently showing the status of activity on the communication bus, and processor operation.
10. Shall have either a field installed BACnet® plug-in communication card which includes an EIA-485 protocol communication port, or a field installed LonWorks™ plug-in communications card.
11. Software upgrades will be accomplished by local download. Software upgrades through chip replacements are not allowed.
12. Shall be shock resistant in all planes to 5G peak, 11ms during operation, and 100G peak, 11ms during storage.
13. Shall be vibration resistant in all planes to 1.5G @ 20-300 Hz.
14. Shall support a bus length of 4000 ft max, 60 devices per 1000 ft section, and 1 RS-485 repeater per 1000 ft sections.

23 09 23.00.B. Open protocol, direct digital controller:

1. Shall be ASHRAE 62-2001 compliant.
2. Shall accept 18-30VAC, 50-60Hz, and consumer 15VA or less power.
3. Shall have an operating temperature range from -40ºF (-40ºC) to 130ºF (54ºC), 10% - 90% RH (non-condensing).
4. Shall have either a field installed BACnet® plug-in communication card which includes an EIA-485 protocol communication port, or a field installed LonWorks™ plug-in communications card.
5. The BACnet® plug in communication card shall include built-in protocol for BACNET (MS/TP and PTP modes)
6. The LonWorks™ plug in communication card shall include the Echelon processor required for all Lon applications.
7. Shall allow access of up to 62 network variables (SNVT). Shall be compatible with all open controllers
8. Baud rate Controller shall be selectable through the EIA-485 protocol communication port.
9. Shall have an LED display independently showing the status of serial communication, running, errors, power, all digital outputs, and all analog inputs.

10. Shall accept the following inputs: space temperature, setpoint adjustment, outdoor air temperature, indoor air quality, outdoor air enthalpy, compressor lock-out, fire shutdown, enthalpy switch, and fan status/filter status/ humidity/ remote occupancy.
11. Shall provide the following outputs: economizer, fan, cooling stage 1, cooling stage 2, heat stage 1, heat stage 2, exhaust.
12. Software upgrades will be accomplished by either local or remote download. No software upgrades through chip replacements are allowed.63

23 09 33 Electric and Electronic Control System for HVAC

23 09 33.00.A. General:

1. Shall be complete with self-contained low-voltage control circuit protected by a resettable circuit breaker on the 24-v transformer side. Transformer shall have 100VA capabilities.
2. Shall utilize color-coded wiring.
3. Shall include a central control terminal board to conveniently and safely provide connection points for vital control functions such as: smoke detectors, phase monitor, economizer, thermostat, DDC control options, loss of charge, freeze sensor, high pressure switches.
4. Unit shall include a minimum of one 10-pin screw terminal connection board for connection of control wiring.

23 09 33.00.B. Safeties:

1. Compressor over-temperature, over current.
2. Loss of charge switch.
   a. Units with 2 compressors shall have different colored wires for the circuit 1 and circuit 2 low and high pressure switches.
   b. Loss of charge switch shall use different color wire than the high pressure switch. The purpose is to assist the installer and service technician to correctly wire and or troubleshoot the rooftop unit.
   c. Loss of charge switch shall have a different sized connector than the high pressure switch. They shall physically prevent the cross-wiring of the safety switches between the high and low pressure side of the system.
3. High-pressure switch.
   a. Units with 2 compressors shall have different colored wires for the circuit 1 and circuit 2 low and high pressure switches.
   b. High pressure switch shall use different color wire than the low pressure switch. The purpose is to assist the installer and service person to correctly wire and or troubleshoot the rooftop unit.
   c. High pressure switch shall have a different sized connector than the loss of charge switch. They shall physically prevent the cross-wiring of the safety switches between the high and low pressure side of the system.
4. Freeze protection sensor, evaporator coil.
5. Automatic reset, motor thermal overload protector.

23 09 93 Sequence of Operations for HVAC Controls

23 09 93.00.A INSERT SEQUENCE OF OPERATION

23 41 13 Panel Air Filters

23 41 13.00.A. Standard filter section shall

1. Shall consist of factory-installed, low velocity, throwaway 2-in. thick fiberglass filters of commercially available sizes.
2. Filters shall be accessible through an access panel as described in the unit cabinet section of this specification (23 81 19.13.H).

23 81 19 Self-Contained Air Conditioners

23 81 19.13 Small-Capacity Self-Contained Air Conditioners

23 81 19.13.A. General

1. Outdoor, rooftop mounted, electrically controlled, heating and cooling unit utilizing a(n) hermetic scroll compressor(s) for cooling duty and heat pump for heating duty.
2. Factory assembled, single-piece heating and cooling rooftop unit. Contained within the unit enclosure shall be all factory wiring, piping, controls, and special features required prior to field start-up.
3. Unit shall use environmentally sound R-410a refrigerant.
4. Unit shall be installed in accordance with the manufacturer's instructions.
5. Unit must be selected and installed in compliance with local, state, and federal codes.

23 81 19.13.B. Quality Assurance

1. Unit meets ASHRAE 90.1-2007 and 2013 minimum efficiency requirements.
2. 3 phase units are Energy Star qualified.
3. Unit shall be rated in accordance with AHRI Standards 210/240 and 340/360.
4. Unit shall be designed to conform to ASHRAE 15.
5. Unit shall be UL-tested and certified in accordance with ANSI Z21.47 Standards and UL-listed and certified under Canadian standards as a total package for safety requirements.
6. Insulation and adhesive shall meet NFPA 90A requirements for flame spread and smoke generation.
7. Unit casing shall be capable of withstanding 1000-hour salt spray exposure per ASTM B117 (scribed specimen).

8. Unit shall be designed in accordance with ISO 9001:2015, and shall be manufactured in a facility registered by ISO 9001:2015.
9. Roof curb shall be designed to conform to NRCA Standards.
10. Unit shall be subjected to a completely automated run test on the assembly line. The data for each unit will be stored at the factory, and must be available upon request.
11. Unit shall be designed in accordance with UL Standard 1995, Fifth Edition including tested to withstand rain.
12. Unit shall be constructed to prevent intrusion of snow and tested to prevent snow intrusion into the control box up to 40 mph.

23 81 19.13.C. Delivery, Storage, and Handling

1. Unit shall be stored and handled per manufacturer's recommendations.
2. Lifted by crane requires either shipping top panel or spreader bars.
3. Unit shall only be stored or positioned in the upright position.

23 81 19.13.E. Project Conditions

1. As specified in the contract.

23 81 19.13.F. Operating Characteristics

1. Unit shall be capable of starting and running at 115ºF (46ºC) ambient outdoor temperature, meeting maximum load criteria of AHRI Standard 210/240 or 340/360 at ± 10% voltage.
2. Compressor with standard controls shall be capable of operation from 40ºF (4ºC) , ambient outdoor temperatures. Accessory low ambient kit is necessary if mechanically cooling at ambient temperatures below 40ºF (4ºC).
3. Unit shall discharge supply air vertically or horizontally as shown on contract drawings.
4. Unit shall be factory configured for vertical supply & return configurations.
5. Unit shall be field convertible from vertical to horizontal configuration.

23 81 19.13.G. Electrical Requirements

1. Main power supply voltage, phase, and frequency must match those required by the manufacturer.

23 81 19.13.H. Unit Cabinet

1. Unit cabinet shall be constructed of galvanized pre-painted steel.
2. Unit cabinet exterior paint shall be: film thickness, (dry) 0.003 inches minimum, flat (per ASTM D523, 60ºF): 60, Hardness: H-2H Pencil hardness.
3. Evaporator fan compartment interior cabinet insulation shall conform to AHRI Standards 210/240 or 340/360 minimum exterior sweat criteria. Interior surfaces shall be insulated with a minimum 1/2-in. thick, 1.6 lb density, flexible fiberglass insulation, aluminum foil-faced on the air side.
4. Base of unit shall have locations for thru-the-base electrical connections (factory installed or field installed), standard.
5. Base Rail
   a. Unit shall have base rails on all sides.
   b. Holes shall be provided in the base rails for rigging shackles to facilitate maneuvering and overhead rigging.
   c. Holes shall be provided in the base rail for moving the rooftop by fork truck.
   d. Base rail shall be a minimum of 14 gauge thickness.
6. Condensate pan and connections:
   a. Shall be a sloped condensate drain pan made of a non-corrosive material.
   b. Shall comply with ASHRAE Standard 62.
   c. Shall use a 3/4″ NPT drain connection, through the side of the drain pan. Connection shall be made per manufacturer's recommendations.
7. Top panel:
   a. Indoor section shall be a single piece top panel.
8. Electrical Connections
   a. All unit power wiring shall enter unit cabinet at a single, factory-prepared, knockout location.
   b. Thru-the-base capability
      1. Standard unit shall have a thru-the-base electrical location(s) using a raised, embossed portion of the unit basepan.
      2. No basepan penetration, other than those authorized by the manufacturer, is permitted.
9. Component access panels (standard)
   a. Cabinet panels shall be easily removable for servicing.
   b. Stainless steel metal hinges are standard on all doors.
   c. Panels covering control box, indoor fan, indoor fan motor, and electric or gas heater components (where applicable), shall have 1/4 turn latches.

23 81 19.13.J. Coils

1. Standard Aluminum Micro Channel Coils: on all models.
   a. Standard evaporator and condenser coils shall have aluminum micro channel coils.
   b. Evaporator and Condenser coils shall be leak tested to 150 psig, pressure tested to 550 psig, and qualified to UL 1995 burst test at 2,200 psig.

23 81 19.13.K. Refrigerant Components

1. Refrigerant circuit shall include the following control, safety, and maintenance features:
   a. Thermal Expansion Valve (TXV) with venturi type distributor .
   b. Refrigerant filter drier.
   c. External service gauge connections to unit suction and discharge lines.
2. Compressors
   a. Unit shall use one fully hermetic, scroll compressor for each independent refrigeration circuit.
   b. Compressor motors shall be cooled by refrigerant gas passing through motor windings.
   d. Compressors shall be internally protected from high discharge temperature conditions.
   e. Compressors shall be protected from an over-temperature and over-amperage conditions by an internal, motor overload device.
   f. Compressor shall be factory mounted on rubber grommets.
   g. Compressor motors shall have internal line break thermal, current overload and high pressure differential protection.
   h. Crankcase heaters shall not be required for normal operating range.

23 81 19.13.L. Filter Section

1. Filters access is specified in the unit cabinet section of this specification.
2. Filters shall be held in place by a sliding filter tray, facilitating easy removal and installation.
3. Shall consist of factory-installed, low velocity, throw-away 2-in. thick fiberglass filters.
4. Filters shall be standard, commercially available sizes.
5. Filter face velocity shall not exceed 365 fpm at nominal airflows.

23 81 19.13.M. Evaporator Fan and Motor

1. Evaporator fan motor:
   a. Shall have permanently lubricated bearings.
   b. Shall have inherent automatic-reset thermal overload protection or circuit breaker.
   c. Shall have a maximum continuous bhp rating for continuous duty operation; no safety factors above that rating shall be required.
2. Belt-driven Evaporator Fan:
   a. Belt drive shall include an adjustable-pitch motor pulley.
   b. Shall use sealed, permanently lubricated ball-bearing type.
   c. Blower fan shall be double-inlet type with forward-curved blades.
   d. Shall be constructed from steel with a corrosion resistant finish and dynamically balanced.

23 81 19.13.N. Condenser Fans and Motors

1. Condenser fan motors:
   a. Shall be a totally enclosed motor.
   b. Shall use permanently lubricated bearings.
   c. Shall have inherent thermal overload protection with an automatic reset feature.
   d. Shall use a shaft-down design. Shaft-up designs including those with “rain-slinger devices” shall not be allowed.
2. Condenser Fans:
   a. Shall be a direct-driven propeller type fan.
   b. Shall have aluminum blades riveted to corrosion-resistant steel spiders and shall be dynamically balanced.

23 81 19.13.O. Special Features, Options and Accessories

1. Integrated Economizers:
   a. Integrated, gear-driven parallel modulating blade design type capable of simultaneous economizer and compressor operation.
   b. Independent modules for vertical or horizontal return configurations shall be available. Vertical return modules shall be available as a factory installed option.
   c. Damper blades shall be galvanized steel with metal gears. Plastic or composite blades on intake or return shall not be acceptable.

   d. Shall include all hardware and controls to provide free cooling with outdoor air when temperature and/or humidity are below setpoints.
   e. Shall be equipped with gear driven dampers for both the outdoor ventilation air and the return air for positive air stream control.
   f. Shall be capable of introducing up to 100% outdoor air.
   g. Shall be equipped with a barometric relief damper capable of relieving up to 100% return air.
   h. Shall be designed to close damper(s) during loss-of-power situations with spring return built into motor.
   i. An outdoor single enthalpy sensor shall be provided as standard. Outdoor air sensor setpoint shall be adjustable and shall range from the enthalpy equivalent of 63°F @ 50% rh to 73°F @ 50% rh. Additional sensor options shall be available as accessories.
   j. The economizer controller shall also provide control of an accessory power exhaust unit function. Factory set at 70%, with a range of 0% to 100%.
   k. The economizer shall maintain minimum airflow into the building during occupied period and provide design ventilation rate for full occupancy. A remote potentiometer may be used to override the damper setpoint.
   l. Dampers shall be completely closed when the unit is in the unoccupied mode.
   m. Economizer controller shall accept a 2-10Vdc CO2 sensor input for IAQ/DCV control. In this mode, dampers shall modulate the outdoor-air damper to provide ventilation based on the sensor input.
   n. Compressor lockout sensor on the unit controller is factory set at 35°F and is adjustable from 30ºF (−1ºC) to 50ºF (10ºC) and resets the cooling lockout at 5°F (+2.7°C) above the set point.
   o. Actuator shall be direct coupled to economizer gear. No linkage arms or control rods shall be acceptable.
   p. Economizer controller shall provide indications when in free cooling mode, in the DCV mode, or the exhaust fan contact is closed.
   q. Economizer wire harness will have provision for smoke detector.
2. Two-Position Motorized Damper
   a. Damper shall be a Two-Position Motorized Damper. Damper travel shall be from the full closed position to the field adjustable %-open setpoint.
   b. Damper shall include adjustable damper travel from 25% to 100% (full open).
   c. Damper shall include single or dual blade, gear driven dampers and actuator motor.
   d. Actuator shall be direct coupled to damper gear. No linkage arms or control rods shall be acceptable.
   e. Damper will admit up to 100% outdoor air for applicable rooftop units.
   f. Damper shall close upon indoor (evaporator) fan shutoff and/or loss of power.
   g. The damper actuator shall plug into the rooftop unit's wiring harness plug. No hard wiring shall be required.
   h. Outside air hood shall include aluminum water entrainment filter
3. Manual damper
   a. Manual damper package shall consist of damper, air inlet screen, and rain hood which can be preset to admit up to 50% outdoor air for year round ventilation.
4. Head Pressure Control Package
   a. Controller shall control coil head pressure by condenser-fan cycling.
5. Condenser Coil Hail Guard Assembly
   a. Shall protect against damage from hail.
   b. Shall be louvered design.
6. Convenience Outlet:
   a. Non-Powered convenience outlet.
      1. Outlet shall be powered from a separate 115-120v power source.
      2. A transformer shall not be included.
      3. Outlet shall be factory-installed and internally mounted with easily accessible 115-v female receptacle.
      4. Outlet shall include 15 amp GFI receptacles.
      5. Outlet shall be accessible from outside the unit.
7. Fan/Filter Status Switch:
   a. Switch shall provide status of indoor evaporator fan (ON/OFF) or filter (CLEAN/DIRTY).
   b. Status shall be displayed either over communication bus (when used with direct digital controls) or through the controller LCD display inside the unit control box.
8. Propeller Power Exhaust:
   a. Power exhaust shall be used in conjunction with an integrated economizer.
   b. Independent modules for vertical or horizontal return configurations shall be available.

c. Horizontal power exhaust is shall be mounted in return ductwork.
d. Power exhaust shall be controlled by economizer controller operation. Exhaust fans shall be energized when dampers open past the 0-100% adjustable setpoint on the economizer control.

9. Roof Curbs (Vertical):
   a. Full perimeter roof curb with exhaust capability providing separate air streams for energy recovery from the exhaust air without supply air contamination.
   b. Formed galvanized steel with wood nailer strip and shall be capable of supporting entire unit weight.
   c. Permits installation and securing of ductwork to curb prior to mounting unit on the curb.
10. High-Static Indoor Fan Motor(s) and Drive(s):
   a. High-static motor(s) and drive(s) shall be factory-installed to provide additional performance range.
11. Outdoor Air Enthalpy Sensor:
   a. The outdoor air enthalpy sensor shall be used to provide single enthalpy control. When used in conjunction with a return air enthalpy sensor, the unit will provide differential enthalpy control. The sensor allows the unit to determine if outside air is suitable for free cooling.
12. Return Air Enthalpy Sensor:
   a. The return air enthalpy sensor shall be used in conjunction with an outdoor air enthalpy sensor to provide differential enthalpy control.
13. Indoor Air Quality (CO2) Sensor:
   a. Shall be able to provide demand ventilation indoor air quality (IAQ) control.
   b. The IAQ sensor shall be available in wall mount with LED display. The setpoint shall have adjustment capability.
14. Smoke detectors:
   a. Shall be a Four-Wire Controller and Detector.
   b. Shall be environmental compensated with differential sensing for reliable, stable, and drift-free sensitivity.
   c. Shall use magnet-activated test/reset sensor switches.
   d. Shall have a recessed momentary switch for testing and resetting the detector.
   e. Controller shall include:
      1. One set of normally open alarm initiation contacts for connection to an initiating device circuit on a fire alarm control panel.
      2. Two Form-C auxiliary alarm relays for interface with rooftop unit or other equipment.
      3. One Form-C supervision (trouble) relay to control the operation of the Trouble LED on a remote test/reset station.
      4. Capable of direct connection to two individual detector modules.
      5. Can be wired to up to 14 other duct smoke detectors for multiple fan shutdown applications.
15. Electric Heat:
   a. Heating Section
      1. Heater element open coil resistance wire, nickel-chrome alloy, strung through ceramic insulators mounted on metal frame. Coil ends are staked and welded to terminal screw slots.
      2. Heater assemblies are provided with integral fusing for protection of internal heater circuits not exceeding 48 amps each. Auto reset thermo limit controls, magnetic heater contactors (24 v coil) and terminal block all mounted in electric heater control box (minimum 18 ga galvanized steel) attached to end of heater assembly.

26 29 23.12. Adjustable Frequency Drive

1. Unit shall be supplied with an electronic variable frequency drive for the supply air fan.
2. Drive shall be factory installed in an enclosed cabinet.
3. Drive shall meet UL Standard 95-5V.
4. The completed unit assembly shall be UL listed.
5. Drives are to be accessible through a tooled access hinged door assembly.
6. The unit manufacturer shall install all power and control wiring.
7. The supply air fan drive output shall be controlled by the factory installed main unit control system and drive status and operating speed shall be monitored and displayed at the main unit control panel.
8. Drive shall be programmed and factory run tested in the unit.

BEFORE PURCHASING THIS APPLIANCE, READ IMPORTANT ENERGY COST AND EFFICIENCY INFORMATION AVAILABLE FROM YOUR RETAILER.

GENERAL TERMS OF LIMITED WARRANTY*

Rheem will furnish a replacement for any part of this product which fails in normal use and service within the applicable periods stated, in accordance with the terms of the limited warranty.

***For complete details of the Limited and Conditional Warranties, including applicable terms and conditions, contact your local contractor or the Manufacturer for a copy of the product warranty certificate.**

Compressor
3 Phase, Commercial Applications.....Five (5) Years
Parts
3 Phase, Commercial Applications.....One (1) Year

The new degree of comfort.™

In keeping with its policy of continuous progress and product improvement, Rheem reserves the right to make changes without notice.

Rheem Heating, Cooling & Water Heating • 5600 Old Greenwood Road
Fort Smith, Arkansas 72908 • www.rheem.com

Rheem Canada Ltd./Ltée • 125 Edgeware Road, Unit 1
Brampton, Ontario • L6Y 0P5

INTEGRATED AIR & WATER

PRINTED IN U.S.A 4/19 QG FORM NO. P11-815 REV. 3