FIGURE 21

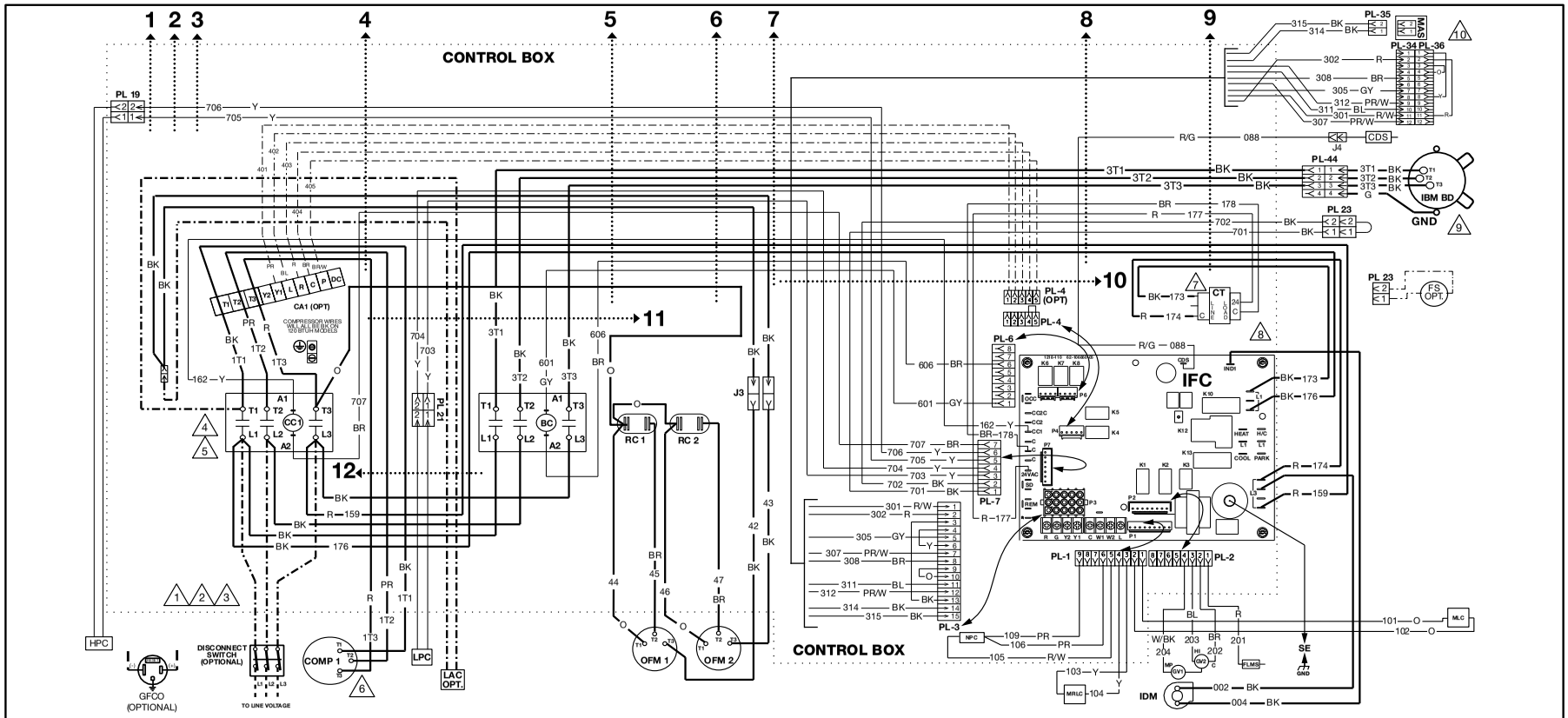

WIRING INFORMATION

LINE VOLTAGE
- -FACTORY STANDARD
- -FACTORY OPTION
- -FIELD INSTALLED

LOW VOLTAGE
- -FACTORY STANDARD
- -FACTORY OPTION
- -FIELD INSTALLED

REPLACEMENT WIRE
-MUST BE THE SAME SIZE AND TYPE OF INSULATION AS ORIGINAL (105°C MIN.)

WARNING
-CABINET MUST BE PERMANENTLY GROUNDED AND CONFORM TO I.E.C., N.E.C., C.E.C., NATIONAL WIRING REGULATIONS, AND LOCAL CODES AS APPLICABLE.

NOTES

1. CONNECTORS SUITABLE FOR USE WITH COPPER CONDUCTORS ONLY.
2. CONNECT FIELD WIRING IN GROUNDED RAIN TIGHT CONDUIT TO FUSED DISCONNECT.
3. CONNECT FIELD WIRE TO COMPRESSOR CONTACTOR (CC1).
4. REMOVE J3 AT (CC1) TO INSTALL LOW AMBIENT ACCESSORY.
5. IF REQUIRED, ATTACH CRANKCASE HEATER ACCESSORY TO CC1 (L1) AND CC1 (L2).
6. COMPRESSOR MOTOR THERMALLY PROTECTED. ALL 3 PHASE MODELS ARE PROTECTED UNDER PRIMARY SINGLE PHASE CONDITIONS.
7. TRANSFORMER FACTORY WIRED AS SHOWN BELOW. CHANGE PRIMARY VOLTAGE CONNECTIONS FOR ALTERNATE VOLTAGES, IF REQUIRED.

UNIT VOLTAGES - HZ	TRANSFORMER TERM.
200-220 - 50HZ	200
208 - 60HZ	230
230 - 60HZ	230
380 - 60HZ	400
380-415 - 50HZ	400
460 - 60HZ	460
575 - 60HZ	230

8. LOW VOLTAGE CIRCUIT IS N.E.C. CLASS 2 WITH A CLASS 2 TRANSFORMER, 24VAC, 50/60 HZ SUPPLIED.
9. MOTOR FACTORY WIRED FOR CORRECT VOLTAGE.
10. REMOVE PL36 FOR ECONOMIZER ACCESSORY. PL34 AND PL36 LOCATED IN RETURN AIR SECTION.

COMPONENT CODES

BC	BLOWER CONTACTOR
CA	COMFORT ALERT MODULE
CC	COMPRESSOR CONTACTOR
CCH	CRANKCASE HEATER
CDS	CLOGGED DRAIN SENSOR
CFS	CLOGGED FILTER SWITCH
COMP	COMPRESSOR
CT	CONTROL TRANSFORMER
DAT	DISCHARGE AIR SENSOR
DISC	DISCONNECT SWITCH
FLMS	FLAME SENSOR
FP	FAN PROVING SWITCH
FS	FREEZE SENSOR
GFCO	GROUND FAULT CONVENIENCE OUTLET
GL	GROUND LUG
GND	GROUND
GV	GAS VALVE
HPC	HIGH PRESSURE CONTROL
IBM	INDOOR BLOWER MOTOR
IDM	INDUCED DRAFT MOTOR
IFC	INTEGRATED FURNACE CONTROL
J	JUMPER
LAC	LOW AMBIENT CONTROL
LPC	LOW PRESSURE CONTROL
MAS	MIXED AIR SENSOR
MLC	MAIN LIMIT CONTROL
MRLC	MANUAL RESET LIMIT CONTROL
NPC	NEGATIVE PRESSURE SWITCH
OAT	OUTSIDE AIR SENSOR
OFM	OUTDOOR FAN MOTOR
PL	PLUG
PT	POWER TRANSFORMER
RAT	RETURN AIR SENSOR
RC	RUN CAPACITOR
RTU-C	ROOFTOP UNIT CONTROL
SE	SPARK ELECTRODE
##	WIRE TIE

WIRE COLOR CODE

BK.....BLACK	G.....GREEN	PR.....PURPLE
BR.....BROWN	G Y .....GRAY	R.....RED
BL.....BLUE	O.....ORANGE	W .....WHITE
		Y.....YELLOW

ELECTRICAL WIRING DIAGRAM

GE NON DDC 1 STG 090/102/120
208/230/380/460V, 3PH, 60HZ

GE NON DDC 1 STG 072/090/102
380-415V, 3PH, 50HZ

APPROVED:	CHECKED:	ORIGINAL RELEASE NO.:
MODELED BY: TEW	DATE: 10-17-17	R-1071S089
PART NO.: 90-106177-01		REV: 02

FIGURE 22

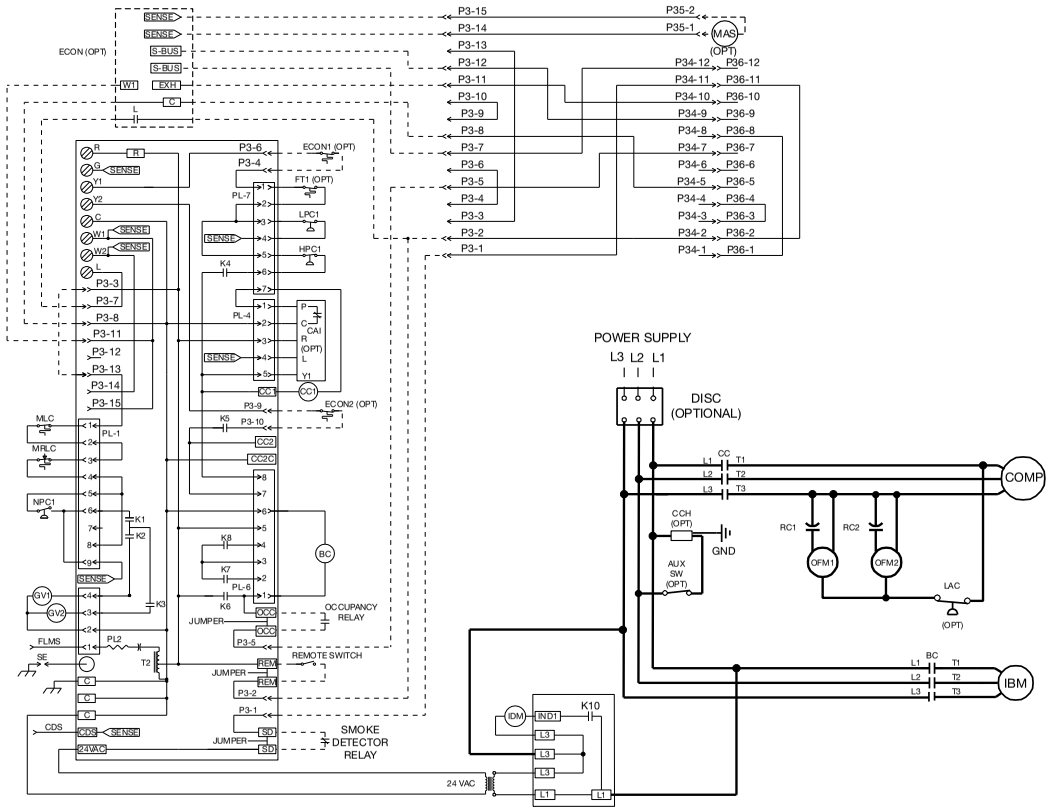

ALARM CODES

CODE	Description	FAULT LEVEL – 0,1,2,3*
0	STANDBY	0
c	COMPRESSOR ON – Low (Flashing if in time delay)	0
C	COMPRESSOR ON – High (Flashing if in time delay)	0
E	Economizer Cooling – No Compressor	0
F	CONTINUOUS FAN	0
h	HEAT ON – Low Stage	0
H	GAS HEAT ON – High Stage	0
4	Comfort Alert Code 4 for Compressor Circuit 1	3
5	Comfort Alert Code 5 for Compressor Circuit 1	3
6	Comfort Alert Code 6 for Compressor Circuit 1	3
7	Comfort Alert Code 7 for Compressor Circuit 1	3
8	Comfort Alert Code 8 for Compressor Circuit 1	3
9	Comfort Alert Code 9 for Compressor Circuit 1	3
11	FAILED IGNITION	2
12	LO FLAME SENSE	1
13	FLAME LOST	2
14	UNEXPECTED FLAME	3
15	2nd Stage Gas valve improper voltage	2
20	REFRIGERANT LOW PRESSURE SWITCH OPEN – CIRCUIT 1	2
21	REFRIGERANT LOW PRESSURE SWITCH OPEN – CIRCUIT 2	2
22	MAIN LIMIT OPEN	2
29	REFRIGERANT HIGH PRESSURE SWITCH OPEN – CIRCUIT 1	2
30	REFRIGERANT HIGH PRESSURE SWITCH OPEN – CIRCUIT 2	2
33	MRLC (Rollout Limit) OPEN	2
34	Comfort Alert Code 4 for Compressor Circuit 2	3
35	Comfort Alert Code 5 for Compressor Circuit 2	3
36	Comfort Alert Code 6 for Compressor Circuit 2	3
37	Comfort Alert Code 7 for Compressor Circuit 2	3
38	Comfort Alert Code 8 for Compressor Circuit 2	3
39	Comfort Alert Code 9 for Compressor Circuit 2	3
42	Invalid Thermostat Selection	1
44	1st Stage COMBUSTION PRESS SWITCH CLOSED	2
46	1st Stage COMBUSTION PRESS SWITCH OPEN	2
49	FREEZE SWITCH OPEN – CIRCUIT 1	2
50	FREEZE SWITCH OPEN -CIRCUIT 2	2
55	2nd Stage COMBUSTION PRESS SWITCH CLOSED	2
57	2nd Stage COMBUSTION PRESS SWITCH OPEN	2,3
59	Condensate Drain Plugged	3
61	Blower Fault – NO RUN	3
83	Condenser Coil Temp Sens or Fail-OCT	2
84	Outdoor Air Temperature Sensor Fail-OAT	2
88	Emergency Stop Fault	3
93	CONTROL Fault	3
97	Smoke Detection	3

*Fault levels: 0 = none, 1=warning, 2= problem, 3=shutdown

WIRING INFORMATION

LINE VOLTAGE
- -FACTORY STANDARD
- -FACTORY OPTION
- -FIELD INSTALLED

LOW VOLTAGE
- -FACTORY STANDARD
- -FACTORY OPTION
- -FIELD INSTALLED

REPLACEMENT WIRE
-MUST BE THE SAME SIZE AND TYPE OF INSULATION AS ORIGINAL (105ºC MIN.)

WARNING
-CABINET MUST BE PERMANENTLY GROUNDED AND CONFORM TO I.E.C., N.E.C., C.E.C., NATIONAL WIRING REGULATIONS, AND LOCAL CODES AS APPLICABLE.

NOTES

1. CONNECTORS SUITABLE FOR USE WITH COPPER CONDUCTORS ONLY.
2. CONNECT FIELD WIRING IN GROUNDED RAIN TIGHT CONDUIT TO FUSED DISCONNECT.
3. CONNECT FIELD WIRE TO COMPRESSOR CONTACTOR (CC1).
4. REMOVE J3 AT (CC1) TO INSTALL LOW AMBIENT ACCESSORY.
5. IF REQUIRED, ATTACH CRANKCASE HEATER ACCESSORY TO CC1 (L1) AND CC1 (L2).
6. COMPRESSOR MOTOR THERMALLY PROTECTED. ALL 3 PHASE MODELS ARE PROTECTED UNDER PRIMARY SINGLE PHASE CONDITIONS.
7. TRANSFORMER FACTORY WIRED AS SHOWN BELOW. CHANGE PRIMARY VOLTAGE CONNECTIONS FOR ALTERNATE VOLTAGES, IF REQUIRED.

UNIT VOLTAGES - HZ	TRANSFORMER TERM.
200-220 - 50HZ	200
208 - 60HZ	230
230 - 60HZ	230
380 - 60HZ	400
380-415 - 50HZ	400
460 - 60HZ	460
575 - 60HZ	230

8. LOW VOLTAGE CIRCUIT IS N.E.C. CLASS 2 WITH A CLASS 2 TRANSFORMER, 24VAC, 50/60 HZ SUPPLIED.
9. MOTOR FACTORY WIRED FOR CORRECT VOLTAGE.
10. REMOVE PL36 FOR ECONOMIZER ACCESSORY. PL34 AND PL36 LOCATED IN RETURN AIR SECTION.

COMPONENT CODES

BC	BLOWER CONTACTOR
CA	COMFORT ALERT MODULE
CC	COMPRESSOR CONTACTOR
CCH	CRANKCASE HEATER
CDS	CLOGGED DRAIN SENSOR
CFS	CLOGGED FILTER SWITCH
COMP	COMPRESSOR
CT	CONTROL TRANSFORMER
DAT	DISCHARGE AIR SENSOR
DISC	DISCONNECT SWITCH
FLMS	FLAME SENSOR
FP	FAN PROVING
FS	FREEZE SENSOR
GFCO	GROUND FAULT CONVENIENCE OUTLET
GL	GROUND LUG
GND	GROUND
HPC	HIGH PRESSURE CONTROL
IBM	INDOOR BLOWER MOTOR
IDM	INDUCED DRAFT MOTOR
IFC	INTEGRATED FURNACE CONTROL
LAC	LOW AMBIENT CONTROL
LPC	LOW PRESSURE CONTROL
MAS	MIXED AIR SENSOR
MLC	MAIN LIMIT CONTROL
MRLC	MANUAL RESET LIMIT CONTROL
NPC	NEGATIVE PRESSURE SWITCH
OAT	OUTSIDE AIR SENSOR
OFM	OUTDOOR FAN MOTOR
PL	PLUG
PT	POWER TRANSFORMER
RAT	RETURN AIR SENSOR
RC	RUN CAPACITOR
RTU-C	ROOFTOP UNIT CONTROL
SE	SPARK ELECTRODE

WIRE COLOR CODE

BK.....BLACK	G.....GREEN	PR.....PURPLE
BR.....BROWN	G Y .....GRAY	R.....RED
BL.....BLUE	O.....ORANGE	W .....WHITE
		Y.....YELLOW

ELECTRICAL WIRING SCHEMATIC

GE NON DDC 1 STG 090/102/120
208/230/380/460V, 3PH, 60HZ

GE NON DDC 1 STG 072/090/102
380-415V, 3PH, 50HZ

APPROVED:	CHECKED:	ORIGINAL RELEASE NO.:
MODELED BY: TEW	DATE: 10-17-17	R-1071S089
PART NO.: 90-106178-01		REV: 03

FIGURE 23

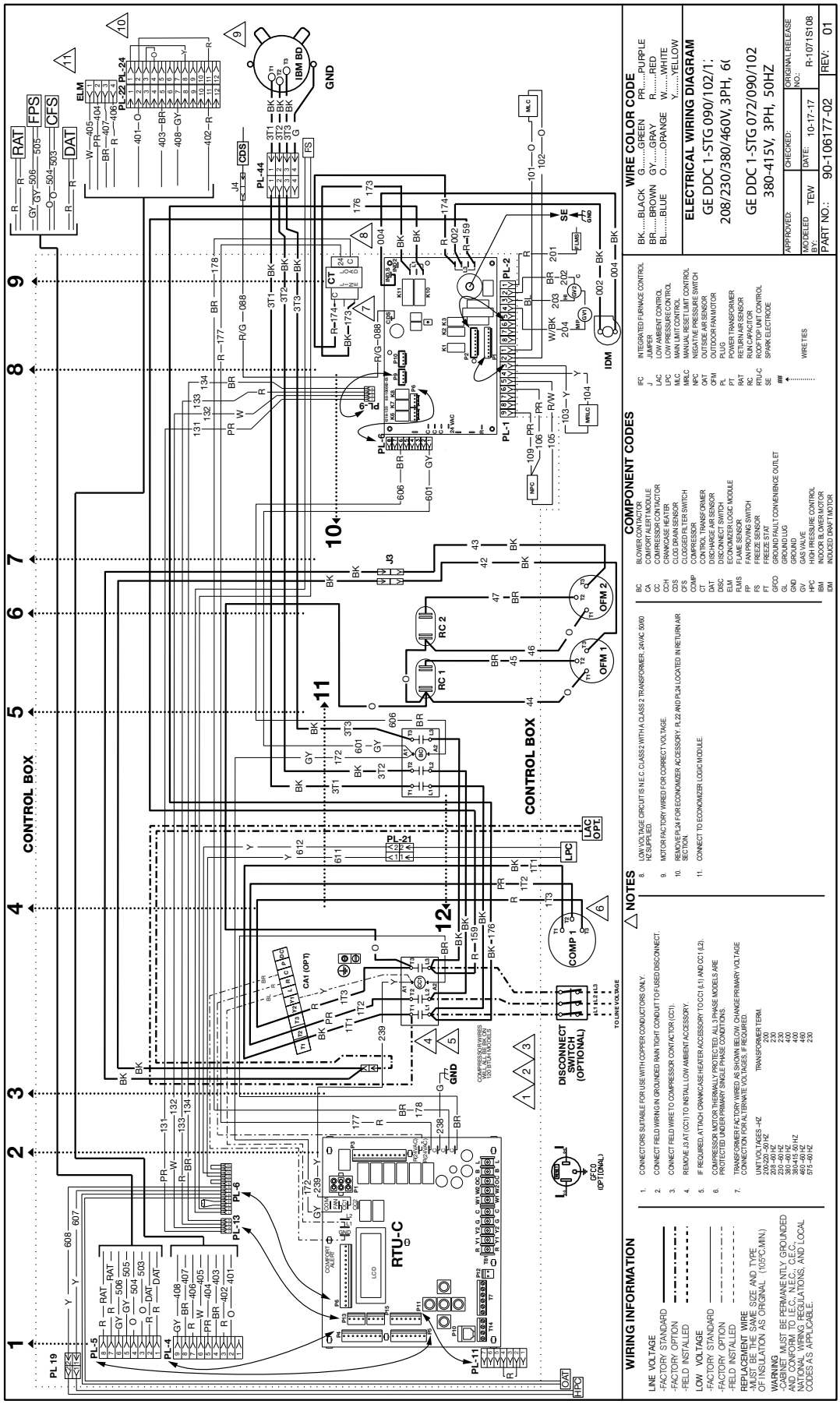
ELECTRICAL WIRING DIAGRAM
GE DDC 1-STG 090/102/1:
208/230/380/460V, 3PH, 6t
GE DDC 1-STG 072/090/102
380-415V, 3PH, 50HZ
WIRE COLOR CODE
BK....BLACK G.....GREEN PR....PURPLE
BR....BROWN GY....GRAY R.....RED
BL.....BLUE O.....ORANGE W.....WHITE
Y.....YELLOW
APPROVED:
MODELED BY: TEW
CHECKED:
DATE: 10-17-17
ORIGINAL RELEASE NO: R-1071S108
PART NO.: 90-106177-02
REV: 01
COMPONENT CODES
IFC INTEGRATED FURNACE CONTROL
J JUMPER
LAC LOW AMBIENT CONTROL
LPC LOW PRESSURE CONTROL
MAT MANUAL ATTACH
MLC MANUAL RESET LIMIT CONTROL
MRLC NEGATIVE PRESSURE SWITCH
NPC OUTSIDE AIR SENSOR
OAT OUTDOOR FAN MOTOR
OFM PLUG
PL POWER TRANSFORMER
PT RETURN AIR SENSOR
RAT RUN CAPACITOR
RC ROOFTOP UNIT CONTROL
RTU-C SPARK ELECTRODE
SE
WIRE TIES
BC BLOWER CONTACTOR
CA COMFORT ALERT MODULE
CC COMPRESSOR CONTACTOR
COH CONVENIENCE OUTLET
CDS CLOG DRAIN SENSOR
CFS CLOGGED FILTER SWITCH
COMP COMPRESSOR
CT CONTROL TRANSFORMER
DAT DISCHARGE AIR SENSOR
DS DISCONNECT SWITCH
ELM ECONOMIZER LOGIC MODULE
FLMS FLAME SENSOR
FP FAN PROVING SWITCH
FS FREEZE SENSOR
GFCI GROUND FAULT CONVENIENCE OUTLET
GL GROUND LUG
GND GROUND
GV GAS VALVE
HPC HIGH PRESSURE CONTROL
IBM INDOOR BLOWER MOTOR
IDM INDUCED DRAFT MOTOR
NOTES
1. CONNECTORS SUITABLE FOR USE WITH COPPER CONDUCTORS ONLY.
2. CONNECT FIELD WIRING IN GROUNDED RIGID CONDUIT TO FUSED DISCONNECT.
3. CONNECT FIELD WIRE TO COMPRESSOR CONTACTOR (CC1).
4. REMOVE J3 A1 (CC1) TO INSTALL LOW AMBIENT ACCESSORY.
5. IF REQUIRED, ATTACH CRANKCASE HEATER ACCESSORY TO CC1 (L1) AND CC1 (L2).
6. COMPRESSOR MOTOR THERMALLY PROTECTED. ALL 3 PHASE MODELS ARE PROTECTED UNDER PRIMARY SINGLE PHASE CONDITIONS.
7. TRANSFORMER FACTORY WIRED AS SHOWN BELOW. CHANGE PRIMARY VOLTAGE CONNECTION FOR ALTERNATE VOLTAGES, IF REQUIRED.
UNIT VOLTAGES -HZ TRANSFORMER TERM.
208-230-1-60HZ 230
208-230-1-50HZ 230
220-240-1-50HZ 230
380-415-1-50HZ 400
380-415-3-50HZ 400
460-480-3-60HZ 460
575-480-3-60HZ 230
8. LOW VOLTAGE CIRCUIT IS N.E.C. CLASS 2 WITH A CLASS 2 TRANSFORMER. 24VAC 50/60 HZ SUPPLIED.
9. MOTOR FACTORY WIRED FOR CORRECT VOLTAGE.
10. REMOVE PL24 FOR ECONOMIZER ACCESSORY. PL22 AND PL24 LOCATED IN RETURN AIR SECTION.
11. CONNECT TO ECONOMIZER LOGIC MODULE.
WIRING INFORMATION
LINE VOLTAGE
-FACTORY STANDARD
-FACTORY OPTION
-FIELD INSTALLED
LOW VOLTAGE
-FACTORY STANDARD
-FACTORY OPTION
-FIELD INSTALLED
REPLACEMENT WIRE MUST BE SAME SIZE AND TYPE OF INSULATION AS ORIGINAL. (105°C MIN.)
WARNING
-CABINET MUST BE PERMANENTLY GROUNDED AND CONFORM TO I.E.C., N.E.C., C.E.C., NATIONAL WIRING REGULATIONS, AND LOCAL CODES AS APPLICABLE.
CONTROL BOX
RTU-C
COMPRESSOR
DISCONNECT SWITCH (OPTIONAL)
GND
IBM BD
IDM
OFM 1
OFM 2
RC 1
RC 2
COMP 1
CA1 (OPT)
LAC OPT.
LPC
OAT
HPC
GFCI (OPT.IONAL)
TO LINE VOLTAGE
RAT
FPS
CFS
DAT
CDS
FS
ELM
PL-22
PL-24
PL-44
PL-1
PL-2
PL-4
PL-5
PL-6
PL-11
PL-13
PL-21
PL 19
J3
J4
CT
K11
K10
K2 K3
K1
MRLC
NPC
MLC
GV
MP
IFC
FLMS
SE
GND
1
2
3
4
5
6
7
8
9
10
11
12

FIGURE 24

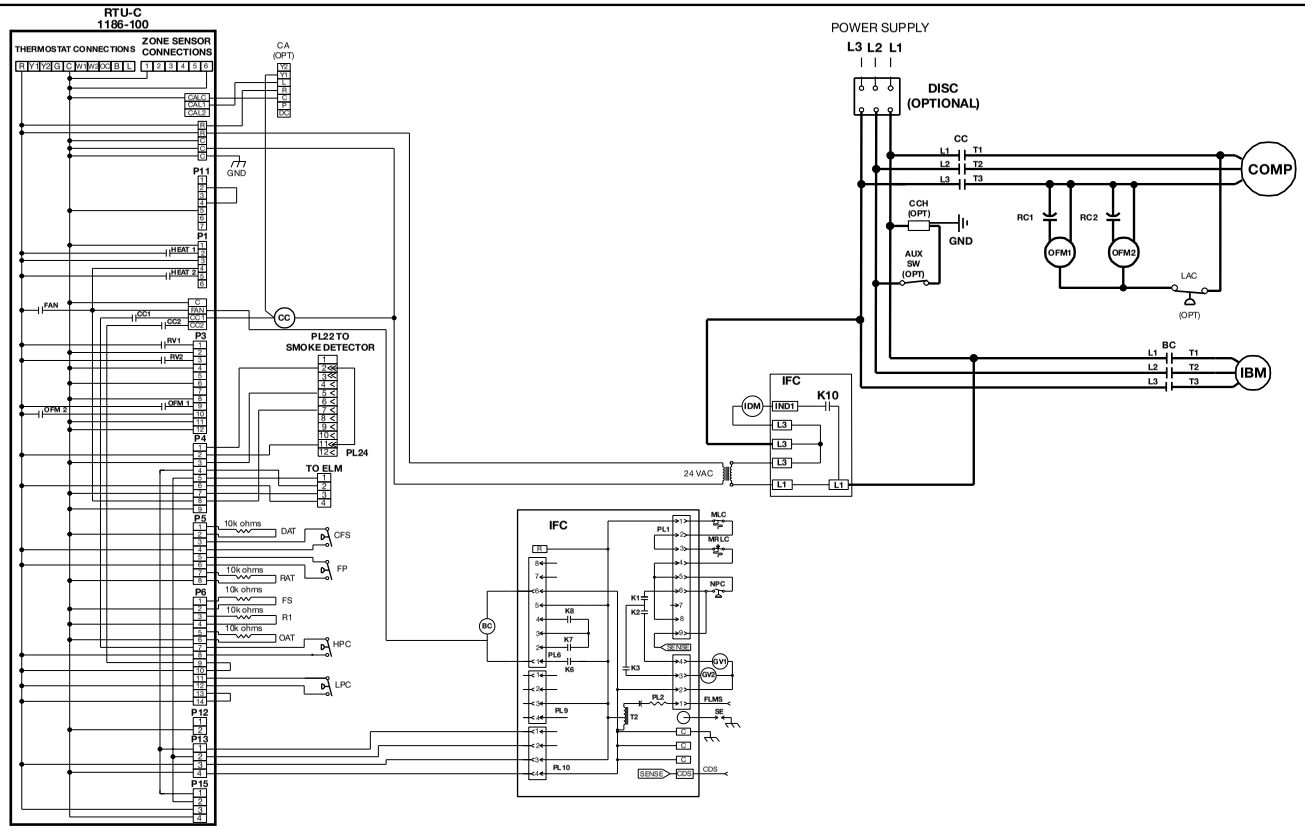

ALARM CODES

CODE	Description	FAULT LEVEL – 0,1,2,3*
0	STANDBY	0
c	COMPRESSOR ON – Low (Flashing if in time delay)	0
C	COMPRESSOR ON – High (Flashing if in time delay)	0
E	Economizer Cooling – No Compressor	0
F	CONTINUOUS FAN	0
h	HEAT ON – Low Stage	0
H	GAS HEAT ON – High Stage	0
4	Comfort Alert Code 4 for Compressor Circuit 1	3
5	Comfort Alert Code 5 for Compressor Circuit 1	3
6	Comfort Alert Code 6 for Compressor Circuit 1	3
7	Comfort Alert Code 7 for Compressor Circuit 1	3
8	Comfort Alert Code 8 for Compressor Circuit 1	3
9	Comfort Alert Code 9 for Compressor Circuit 1	3
11	FAILED IGNITION	2
12	LO FLAME SENSE	1
13	FLAME LOST	2
14	UNEXPECTED FLAME	3
15	2nd Stage Gas valve improper voltage	2
20	REFRIGERANT LOW PRESSURE SWITCH OPEN – CIRCUIT 1	2
21	REFRIGERANT LOW PRESSURE SWITCH OPEN – CIRCUIT 2	2
22	MAIN LIMIT OPEN	2
29	REFRIGERANT HIGH PRESSURE SWITCH OPEN – CIRCUIT 1	2
30	REFRIGERANT HIGH PRESSURE SWITCH OPEN – CIRCUIT 2	2
33	MRLC (Rollout Limit) OPEN	2
34	Comfort Alert Code 4 for Compressor Circuit 2	3
35	Comfort Alert Code 5 for Compressor Circuit 2	3
36	Comfort Alert Code 6 for Compressor Circuit 2	3
37	Comfort Alert Code 7 for Compressor Circuit 2	3
38	Comfort Alert Code 8 for Compressor Circuit 2	3
39	Comfort Alert Code 9 for Compressor Circuit 2	3
42	Invalid Thermostat Selection	1
44	1st Stage COMBUSTION PRESS SWITCH CLOSED	2
46	1st Stage COMBUSTION PRESS SWITCH OPEN	2
49	FREEZE SWITCH OPEN – CIRCUIT 1	2
50	FREEZE SWITCH OPEN -CIRCUIT 2	2
55	2nd Stage COMBUSTION PRESS SWITCH CLOSED	2
57	2nd Stage COMBUSTION PRESS SWITCH OPEN	2, 3
59	Condensate Drain Plugged	3
61	Blower Fault – NO RUN	3
83	Condenser Coil Temp Sensor Fail-OCT	2
84	Outdoor Air Temperature Sensor Fail-OAT	2
88	Emergency Stop Fault	3
93	CONTROL Fault	3
97	Smoke Detection	3

*Fault Levels: 0 = none, 1 = warning, 2 = problem, 3 = shutdown

WIRING INFORMATION

LINE VOLTAGE
- -FACTORY STANDARD
- -FACTORY OPTION
- -FIELD INSTALLED

LOW VOLTAGE
- -FACTORY STANDARD
- -FACTORY OPTION
- -FIELD INSTALLED

REPLACEMENT WIRE
-MUST BE THE SAME SIZE AND TYPE OF INSULATION AS ORIGINAL (105°C MIN.)

WARNING
-CABINET MUST BE PERMANENTLY GROUNDED AND CONFORM TO I.E.C., N.E.C., C.E.C., NATIONAL WIRING REGULATIONS, AND LOCAL CODES AS APPLICABLE.

NOTES

1. CONNECTORS SUITABLE FOR USE WITH COPPER CONDUCTORS ONLY.
2. CONNECT FIELD WIRING IN GROUNDED RAIN TIGHT CONDUIT TO FUSED DISCONNECT.
3. CONNECT FIELD WIRE TO COMPRESSOR CONTACTOR (CC1).
4. REMOVE J3 AT (CC1) TO INSTALL LOW AMBIENT ACCESSORY.
5. IF REQUIRED, ATTACH CRANKCASE HEATER ACCESSORY TO CC1 (L1) AND CC1 (L2).
6. COMPRESSOR MOTOR THERMALLY PROTECTED. ALL 3 PHASE MODELS ARE PROTECTED UNDER PRIMARY SINGLE PHASE CONDITIONS.
7. TRANSFORMER FACTORY WIRED AS SHOWN BELOW. CHANGE PRIMARY VOLTAGE CONNECTIONS FOR ALTERNATE VOLTAGES, IF REQUIRED.

UNIT VOLTAGES - HZ	TRANSFORMER TERM.
200-220 - 50HZ	200
208 - 60HZ	230
230 - 60HZ	230
380 - 60HZ	400
380-415 - 50HZ	400
460 - 60HZ	460
575 - 60HZ	230

8. LOW VOLTAGE CIRCUIT IS N.E.C. CLASS 2 WITH A CLASS 2 TRANSFORMER, 24VAC, 50/60 HZ SUPPLIED.
9. MOTOR FACTORY WIRED FOR CORRECT VOLTAGE.
10. REMOVE PL24 FOR ECONOMIZER ACCESSORY. PL22 AND PL24 LOCATED IN RETURN AIR SECTION.

COMPONENT CODES

BC	BLOWER CONTACTOR
CA	COMFORT ALERT MODULE
CC	COMPRESSOR CONTACTOR
CCH	CRANKCASE HEATER
CDS	CLOGGED DRAIN SENSOR
CFS	CLOGGED FILTER SWITCH
COMP	COMPRESSOR
CT	CONTROL TRANSFORMER
DAT	DISCHARGE AIR SENSOR
DISC	DISCONNECT SWITCH
FLMS	FLAME SENSOR
FP	FAN PROVING
FS	FREEZE SENSOR
GFCO	GROUND FAULT CONVENIENCE OUTLET
GL	GROUND LUG
GND	GROUND
HPC	HIGH PRESSURE CONTROL
IBM	INDOOR BLOWER MOTOR
IDM	INDUCED DRAFT MOTOR
IFC	INTEGRATED FURNACE CONTROL
LAC	LOW AMBIENT CONTROL
LPC	LOW PRESSURE CONTROL
MAS	MIXED AIR SENSOR
MLC	MAIN LIMIT CONTROL
MRLC	MANUAL RESET LIMIT CONTROL
NPC	NEGATIVE PRESSURE SWITCH
OAT	OUTSIDE AIR SENSOR
OFM	OUTDOOR FAN MOTOR
PL	PLUG
PT	POWER TRANSFORMER
RAT	RETURN AIR SENSOR
RC	RUN CAPACITOR
RTU-C	ROOFTOP UNIT CONTROL
SE	SPARK ELECTRODE

WIRE COLOR CODE

BK.....BLACK	G.....GREEN	PR.....PURPLE
BR.....BROWN	G Y .....GRAY	R.....RED
BL.....BLUE	O.....ORANGE	W .....WHITE
		Y.....YELLOW

ELECTRICAL WIRING SCHEMATIC

GE DDC 1 STG 090/102/120
208/230/380/460V, 3PH, 60HZ

GE DDC 1 STG 072/090/102
380-415V, 3PH, 50HZ

APPROVED:	CHECKED:	ORIGINAL RELEASE NO.:
MODELED BY: TEW	DATE: 10-24-17	R-1071S108
PART NO.: 90-106178-02		REV: 01

FIGURE 25

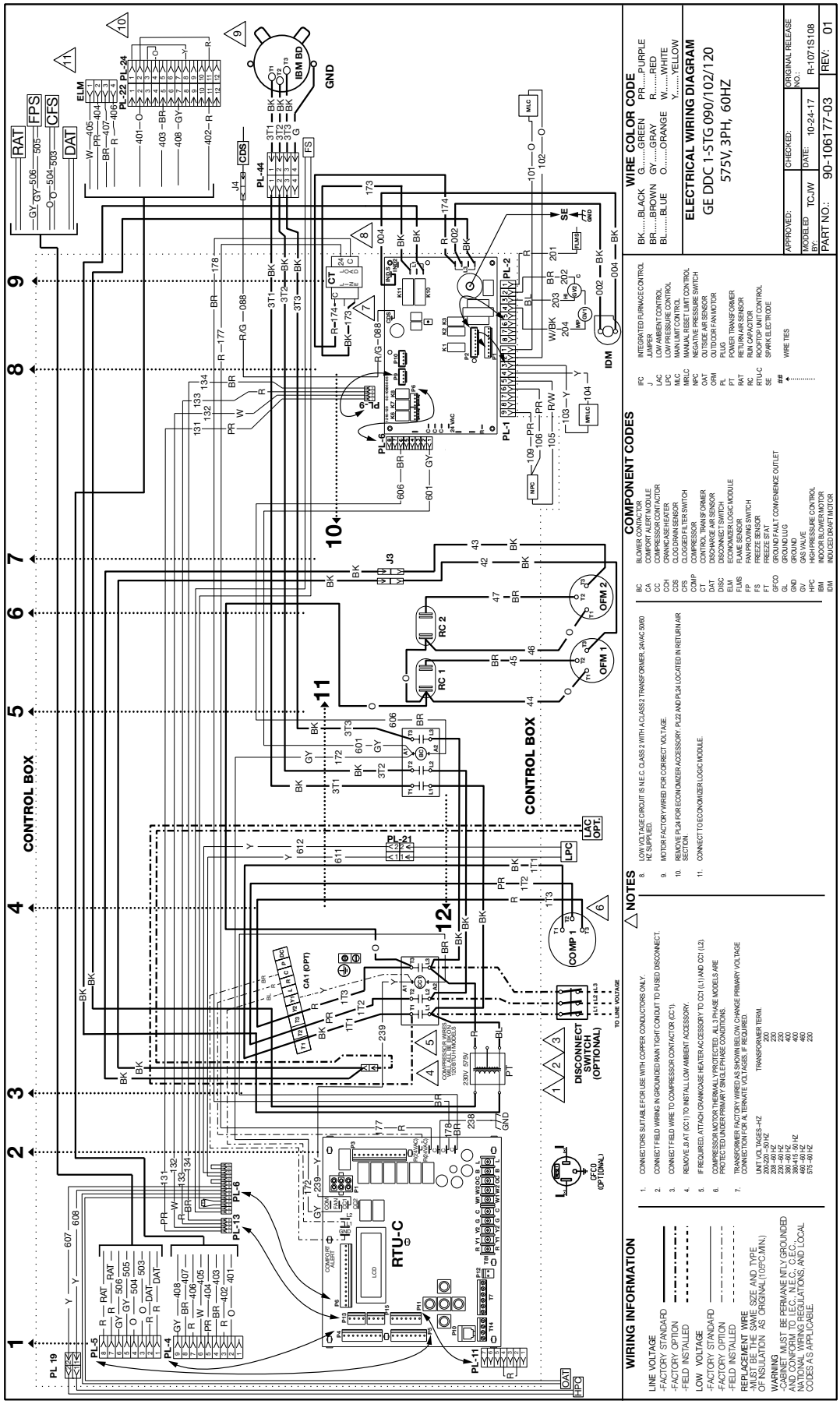
ELECTRICAL WIRING DIAGRAM
GE DDC 1-STG 090/102/120
575V, 3PH, 60HZ
WIRE COLOR CODE
BK....BLACK G.....GREEN PR....PURPLE
BR.....BROWN GY.....GRAY R.....RED
BL.....BLUE O.....ORANGE W.....WHITE
Y.....YELLOW
COMPONENT CODES
NOTES
WIRING INFORMATION
CONTROL BOX
RTU-C
COMP 1
OFM 1
OFM 2
RC 1
RC 2
DISCONNECT SWITCH (OPTIONAL)
TO LINE VOLTAGE
GND
IBM BD
IDM
RAT
FPS
CFS
DAT
ELM
CDS
FS
SE
LAC OPT.
LPC
OAT
HPC
PL-1
PL-2
PL-4
PL-5
PL-6
PL-11
PL-13
PL-21
PL-22
PL-24
PL-44
PL 19
CA1 (OPT)
COMPRESSOR WIRES 1T1,1T2,1T3 MODELS 120/UTILITY MODELS
230V 575V
GFCI (OPTIONAL)
APPROVED:
MODELED BY: TCJW
PART NO.: 90-106177-03
CHECKED:
DATE: 10-24-17
ORIGINAL RELEASE NO.: R-1071S108
REV: 01

FIGURE 26

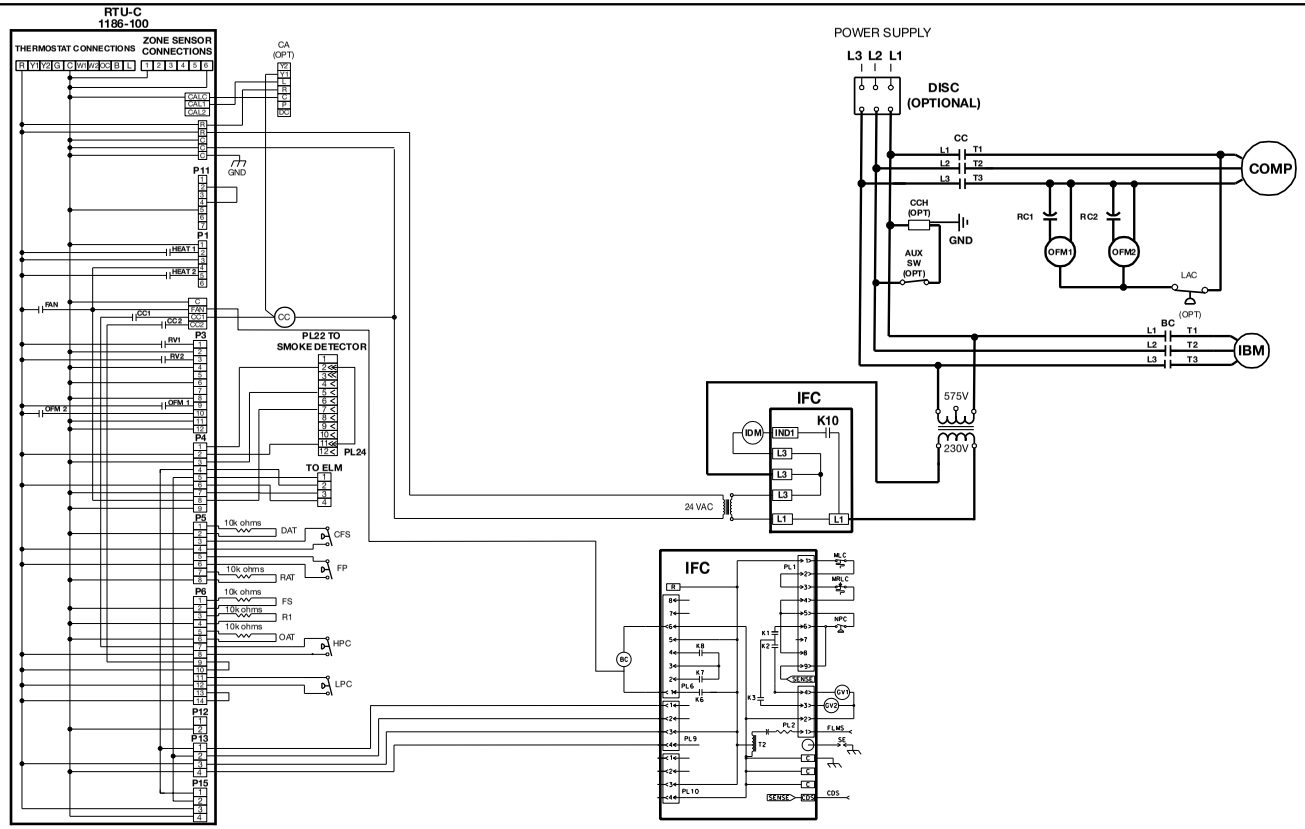

ALARM CODES

CODE	Description	FAULTLEVEL –0,1,2,3*
0	STANDBY	0
c	COMPRESSOR ON – Low (Flashing if in time delay)	0
C	COMPRESSOR ON – High (Flashing if in time delay)	0
E	Economizer Cooling – No Compressor	0
F	CONTINUOUS FAN	0
h	HEAT ON – Low Stage	0
H	GAS HEAT ON – High Stage	0
4	Comfort Alert Code 4 for Compressor Circuit 1	3
5	Comfort Alert Code 5 for Compressor Circuit 1	3
6	Comfort Alert Code 6 for Compressor Circuit 1	3
7	Comfort Alert Code 7 for Compressor Circuit 1	3
8	Comfort Alert Code 8 for Compressor Circuit 1	3
9	Comfort Alert Code 9 for Compressor Circuit 1	3
11	FAILED IGNITION	2
12	LO FLAME SENSE	1
13	FLAME LOST	2
14	UNEXPECTED FLAME	3
15	2nd Stage Gas valve improper voltage	2
20	REFRIGERANT LOW PRESSURE SWITCH OPEN – CIRCUIT 1	2
21	REFRIGERANT LOW PRESSURE SWITCH OPEN – CIRCUIT 2	2
22	MAIN LIMIT OPEN	2
29	REFRIGERANT HIGH PRESSURE SWITCH OPEN – CIRCUIT 1	2
30	REFRIGERANT HIGH PRESSURE SWITCH OPEN – CIRCUIT 2	2
33	MRLC (Rollout Limit) OPEN	2
34	Comfort Alert Code 4 for Compressor Circuit 2	3
35	Comfort Alert Code 5 for Compressor Circuit 2	3
36	Comfort Alert Code 6 for Compressor Circuit 2	3
37	Comfort Alert Code 7 for Compressor Circuit 2	3
38	Comfort Alert Code 8 for Compressor Circuit 2	3
39	Comfort Alert Code 9 for Compressor Circuit 2	3
42	Invalid Thermostat Selection	1
44	1st Stage COMBUSTION PRESS SWITCH CLOSED	2
46	1st Stage COMBUSTION PRESS SWITCH OPEN	2
49	FREEZE SWITCH OPEN – CIRCUIT 1	2
50	FREEZE SWITCH OPEN - CIRCUIT 2	2
55	2nd Stage COMBUSTION PRESS SWITCH CLOSED	2
57	2nd Stage COMBUSTION PRESS SWITCH OPEN	2,3
59	Condensate Drain Plugged	3
61	Blower Fault – NO RUN	3
83	Condenser Coil Temp Sensor Fail-OCT	2
84	Outdoor Air Temperature Sensor Fail-OAT	2
88	Emergency Stop Fault	3
93	CONTROL Fault	3
97	Smoke Detection	3

*Fault levels:0 = none, 1=warning, 2= problem, 3=shutdown

WIRING INFORMATION

LINE VOLTAGE
- -FACTORY STANDARD
- -FACTORY OPTION
- -FIELD INSTALLED

LOW VOLTAGE
- -FACTORY STANDARD
- -FACTORY OPTION
- -FIELD INSTALLED

REPLACEMENT WIRE
-MUST BE THE SAME SIZE AND TYPE OF INSULATION AS ORIGINAL (105ºC MIN.)

WARNING
-CABINET MUST BE PERMANENTLY GROUNDED AND CONFORM TO I.E.C., N.E.C., C.E.C., NATIONAL WIRING REGULATIONS, AND LOCAL CODES AS APPLICABLE.

NOTES

1. CONNECTORS SUITABLE FOR USE WITH COPPER CONDUCTORS ONLY.
2. CONNECT FIELD WIRING IN GROUNDED RAIN TIGHT CONDUIT TO FUSED DISCONNECT.
3. CONNECT FIELD WIRE TO COMPRESSOR CONTACTOR (CC1).
4. REMOVE J3 AT (CC1) TO INSTALL LOW AMBIENT ACCESSORY.
5. IF REQUIRED, ATTACH CRANKCASE HEATER ACCESSORY TO CC1 (L1) AND CC1 (L2).
6. COMPRESSOR MOTOR THERMALLY PROTECTED. ALL 3 PHASE MODELS ARE PROTECTED UNDER PRIMARY SINGLE PHASE CONDITIONS.
7. TRANSFORMER FACTORY WIRED AS SHOWN BELOW. CHANGE PRIMARY VOLTAGE CONNECTIONS FOR ALTERNATE VOLTAGES, IF REQUIRED.

UNIT VOLTAGES - HZ	TRANSFORMER TERM.
200-220 - 50HZ	200
208 - 60HZ	230
230 - 60HZ	230
380 - 60HZ	400
380-415 - 50HZ	400
460 - 60HZ	460
575 - 60HZ	230

8. LOW VOLTAGE CIRCUIT IS N.E.C. CLASS 2 WITH A CLASS 2 TRANSFORMER, 24VAC, 50/60 HZ SUPPLIED.
9. MOTOR FACTORY WIRED FOR CORRECT VOLTAGE.
10. REMOVE PL24 FOR ECONOMIZER ACCESSORY. PL22 AND PL24 LOCATED IN RETURN AIR SECTION.

COMPONENT CODES

BC	BLOWER CONTACTOR	LPC	LOW PRESSURE CONTROL
CA	COMFORT ALERT MODULE	MAS	MIXED AIR SENSOR
CC	COMPRESSOR CONTACTOR	MLC	MAIN LIMIT CONTROL
CCH	CRANKCASE HEATER	MRLC	MANUAL RESET LIMIT CONTROL
CDS	CLOGGED DRAIN SENSOR	NPC	NEGATIVE PRESSURE SWITCH
CFS	CLOGGED FILTER SWITCH	OAT	OUTSIDE AIR SENSOR
COMP	COMPRESSOR	OFM	OUTDOOR FAN MOTOR
CT	CONTROL TRANSFORMER	PL	PLUG
DAT	DISCHARGE AIR SENSOR	PT	POWER TRANSFORMER
DISC	DISCONNECT SWITCH	RAT	RETURN AIR SENSOR
FLMS	FLAME SENSOR	RC	RUN CAPACITOR
FP	FAN PROVING	RTU-C	ROOFTOP UNIT CONTROL
FS	FREEZE SENSOR	SE	SPARK ELECTRODE
GFCO	GROUND FAULT CONVENIENCE OUTLET		
GL	GROUND LUG		
GND	GROUND		
HPC	HIGH PRESSURE CONTROL		
IBM	INDOOR BLOWER MOTOR		
IDM	INDUCED DRAFT MOTOR		
IFC	INTEGRATED FURNACE CONTROL		
LAC	LOW AMBIENT CONTROL		

WIRE COLOR CODE

BK.....BLACK	G.....GREEN	PR.....PURPLE
BR.....BROWN	GY .....GRAY	R.....RED
BL.....BLUE	O.....ORANGE	W .....WHITE
		Y .....YELLOW

ELECTRICAL WIRING SCHEMATIC

GE DDC 1-STG 090/102/120
575V, 3PH, 60HZ

APPROVED:	CHECKED:	ORIGINAL RELEASE NO.:
MODELED BY: TCJW	DATE: 10-25-17	R-1071S108
PART NO.: 90-106178-03		REV: 01

FIGURE 27

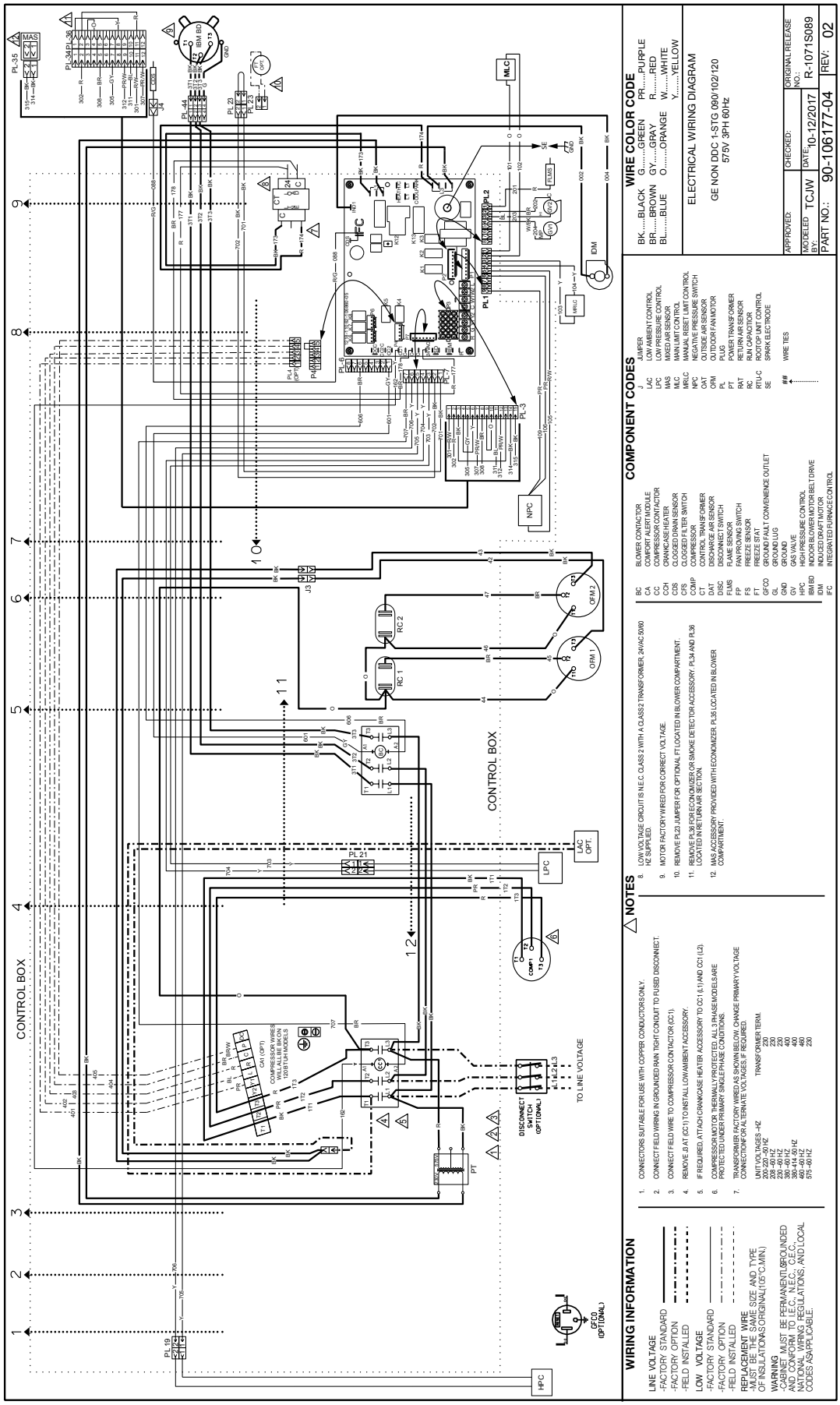
WIRING INFORMATION
LINE VOLTAGE
-FACTORY STANDARD
-FACTORY OPTION
-FIELD INSTALLED
LOW VOLTAGE
-FACTORY STANDARD
-FACTORY OPTION
-FIELD INSTALLED
REPLACEMENT WIRE
-MUST BE THE SAME SIZE AND TYPE OF INSULATION AS ORIGINAL(105°C,MIN.)
WARNING
-CABINET MUST BE PERMANENTLY GROUNDED AND CONFORM TO N.E.C., N.E.C., C.E.C., NATIONAL, AND LOCAL CODES/REGULATIONS, AND LOCAL CODES/REGULATIONS, AND LOCAL CODES/APPLICABLE.
NOTES
1. CONNECTORS SUITABLE FOR USE WITH COPPER CONDUCTORS ONLY.
2. CONNECT FIELD WIRING IN GROUNDED RAIN TIGHT CONDUIT TO FUSED DISCONNECT.
3. CONNECT FIELD WIRE TO COMPRESSOR CONTACTOR (CC1).
4. REMOVE J5 AT (CC1) TO INSTALL LOW AMBIENT ACCESSORY.
5. IF REQUIRED, ATTACH CRANKCASE HEATER ACCESSORY TO CC1 & L1) AND CC1 (L2).
6. COMPRESSOR MOTOR THERMAL LY PROTECTED. ALL 3 PHASE MODELS ARE PROTECTED UNDER DIFFERENT SINGLE PHASE CONDITIONS.
7. TRANSFORMER FACTORY WIRED AS SHOWN BELOW. CHANGE PRIMARY VOLTAGE CONNECTIONS AT TERMINAL TERMINAL BOARD.
UNIT VOLTAGES –HZ TRANSFORMER TERM.
208/230-60HZ 208/230
208-50 HZ 230
230-50 HZ 230
380-415-50 HZ 380
380-415-50 HZ 400
460-50 HZ 460
575-50 HZ 575
575-60 HZ 575
8. LOW VOLTAGE CIRCUIT IS N.E.C. CLASS 2 WITH A CLASS 2 TRANSFORMER, 24VAC 50/60 HZ SUPPLIED.
9. MOTOR FACTORY WIRED FOR CORRECT VOLTAGE.
10. REMOVE PL23 JUMPER FOR OPTIONAL FT LOCATED IN BLOWER COMPARTMENT.
11. REMOVE PL36 FOR ECONOMIZER OR SMOKE DETECTOR ACCESSORY. PL34 AND PL36 LOCATED IN RETURN AIR SECTION.
12. MAS-ACCESSORY PROVIDED WITH ECONOMIZER. PL35 LOCATED IN BLOWER COMPARTMENT.
COMPONENT CODES
BC BLOWER CONTACTOR
CA CONVENIENCE OUTLET MODULE
CC COMPRESSOR CONTACTOR
CCH CRANKCASE HEATER
CDS CLOGGED DRAIN SENSOR
CFS CLOGGED FILTER SWITCH
COMP COMPRESSOR
CT CONTROL TRANSFORMER
DAT DISCHARGE AIR SENSOR
DISC DISCONNECT SWITCH
FLMS FLAME SENSOR
FP FAN PROVING SWITCH
FS FREEZE STAT
FT FREEZE STAT
GFCO GROUND FAULT CONVENIENCE OUTLET
GL GROUND LUG
GND GROUND
GV GAS VALVE
HPC HIGH PRESSURE CONTROL
IDM INDOOR DRAFT MOTOR BELT DRIVE
IFC INTEGRATED FURNACE CONTROL
J JUMPER
LAC LOW AMBIENT CONTROL
LPC LOW PRESSURE CONTROL
MAS MIXED AIR SENSOR
MLC MAIN LIMIT CONTROL
MRLC MANUAL RESET LIMIT CONTROL
NPC NEGATIVE PRESSURE SWITCH
OAT OUTSIDE AIR SENSOR
OFM OUTDOOR FAN MOTOR
PL PLUG
PT POWER TRANSFORMER
RAT RETURN AIR SENSOR
RC RUN CAPACITOR
RTU-C ROOTOP UNIT CONTROL
SE SPARK ELECTRODE
WIRE TIES
WIRE COLOR CODE
BK.....BLACK G.....GREEN PR.....PURPLE
BR.....BROWN GY.....GRAY R.....RED
BL.....BLUE O.....ORANGE W.....WHITE
Y.....YELLOW
ELECTRICAL WIRING DIAGRAM
GE NON DDC 1-STG 090/102/120
575V 3PH 60HZ
APPROVED:
MODELED BY: TCJW
CHECKED:
DATE: 10-12/2017
ORIGINAL RELEASE NO.: R-1071S089
PART NO.: 90-106177-04
REV: 02
CONTROL BOX
CONTROL BOX
TO LINE VOLTAGE
DISCONNECT SWITCH (OPTIONAL)
COMPRESSOR WIRES WILL ALL BE BK ON 1 PHASE LAC MODELS
CA1 (OPT)
PL 19
PL 21
PL 23
PL 34
PL 35
PL 36
PL 44
PL 4
PL 6
PL 3
PL 2
PL 1
PT
HPC
LPC
LAC OPT.
NPC
IDM
MLC
MRLC
GFCO (OPTIONAL)
RC 1
RC 2
OFM 1
OFM 2
CC1
COMP 1
FLMS
FUSE
IFC
SE
GND
GV
CT
J3
J4
J5
J6
J7
J8
J9
J10
J11
J12
J13
J14
J15
J16
J17
J18
J19
J20
J21
J22
J23
J24
J25
J26
J27
J28
J29
J30
J31
J32
J33
J34
J35
J36
J37
J38
J39
J40
J41
J42

FIGURE 28

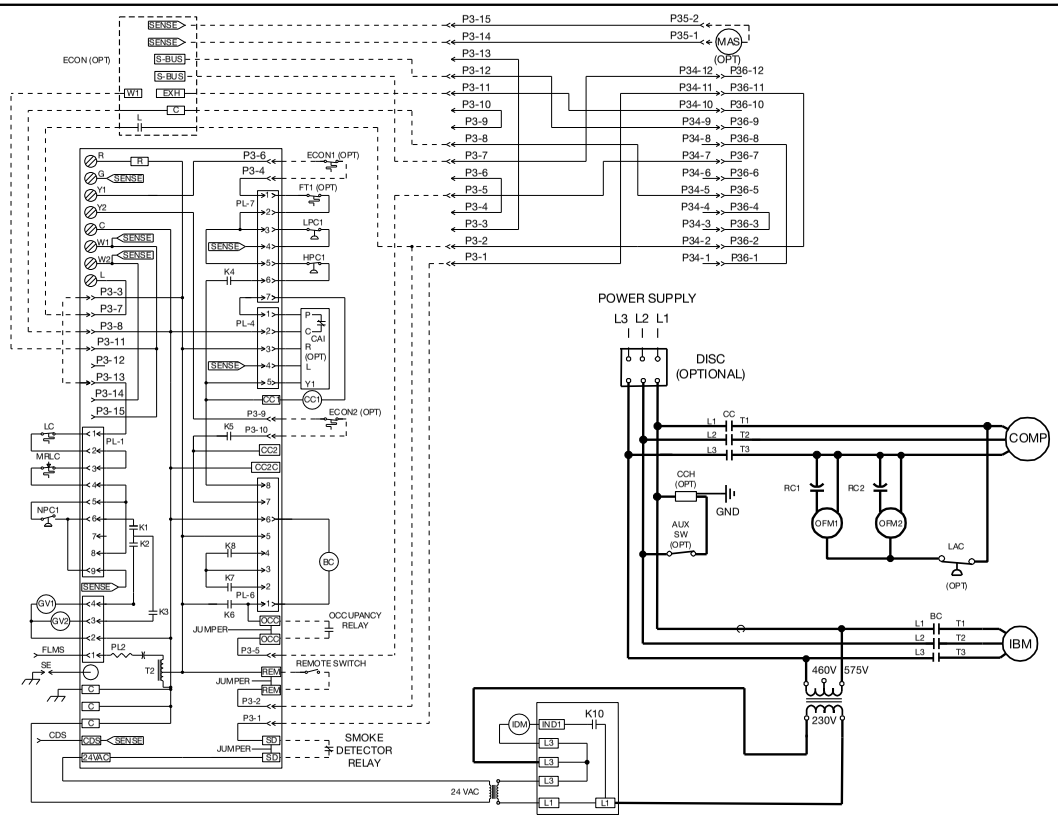

ALARM CODES

CODE	Description	FAULT LEVEL ~0,1,2,3*
0	STANDBY	0
c	COMPRESSOR ON – Low (Flashing if in time delay)	0
C	COMPRESSOR ON –High (Flashing if in time delay)	0
E	Economizer Cooling – No Compressor	0
F	CONTINUOUS FAN	0
h	HEAT ON – Low Stage	0
H	GAS HEAT ON – High Stage	0
4	Comfort Alert Code 4 for Compressor Circuit 1	3
5	Comfort Alert Code 5 for Compressor Circuit 1	3
6	Comfort Alert Code 6 for Compressor Circuit 1	3
7	Comfort Alert Code 7 for Compressor Circuit 1	3
8	Comfort Alert Code 8 for Compressor Circuit 1	3
9	Comfort Alert Code 9 for Compressor Circuit 1	3
11	FAILED IGNITION	2
12	LO FLAME SENSE	1
13	FLAME LOST	2
14	UNEXPECTED FLAME	3
15	2nd Stage Gas valve improper voltage	2
20	REFRIGERANT LOW PRESSURE SWITCH OPEN – CIRCUIT 1	2
21	REFRIGERANT LOW PRESSURE SWITCH OPEN – CIRCUIT 2	2
22	MAIN LIMIT OPEN	2
29	REFRIGERANT HIGH PRESSURE SWITCH OPEN – CIRCUIT 1	2
30	REFRIGERANT HIGH PRESSURE SWITCH OPEN – CIRCUIT 2	2
33	MRLC (Rollout Limit) OPEN	2
34	Comfort Alert Code 4 for Compressor Circuit 2	3
35	Comfort Alert Code 5 for Compressor Circuit 2	3
36	Comfort Alert Code 6 for Compressor Circuit 2	3
37	Comfort Alert Code 7 for Compressor Circuit 2	3
38	Comfort Alert Code 8 for Compressor Circuit 2	3
39	Comfort Alert Code 9 for Compressor Circuit 2	3
42	Invalid Thermostat Selection	1
44	1st Stage COMBUSTION PRESS SWITCH CLOSED	2
46	1st Stage COMBUSTION PRESS SWITCH OPEN	2
49	FREEZE SWITCH OPEN – CIRCUIT 1	2
50	FREEZE SWITCH OPEN -CIRCUIT2	2
55	2nd Stage COMBUSTION PRESS SWITCH CLOSED	2
57	2nd Stage COMBUSTION PRESS SWITCH OPEN	2,3
59	Condensate Drain Plugged	3
61	Blower Fault – NO RUN	3
83	Condenser Coil Temp Sensor Fail-OCT	2
84	Outdoor Air Temperature Sensor Fail-OAT	2
88	Emergency Stop Fault	3
93	CONTROL Fault	3
97	Smoke Detection	3

*Fault levels:0 = none, 1=warning, 2= problem, 3=shutdown

WIRING INFORMATION

LINE VOLTAGE
- FACTORY STANDARD
- FACTORY OPTION
- FIELD INSTALLED

LOW VOLTAGE
- FACTORY STANDARD
- FACTORY OPTION
- FIELD INSTALLED

REPLACEMENT WIRE
-MUST BE THE SAME SIZE AND TYPE OF INSULATION AS ORIGINAL (105°C MIN.)

WARNING
-CABINET MUST BE PERMANENTLY GROUNDED AND CONFORM TO I.E.C., N.E.C., C.E.C., NATIONAL WIRING REGULATIONS, AND LOCAL CODES AS APPLICABLE.

NOTES

1. CONNECTORS SUITABLE FOR USE WITH COPPER CONDUCTORS ONLY.
2. CONNECT FIELD WIRING IN GROUNDED RAIN TIGHT CONDUIT TO FUSED DISCONNECT.
3. CONNECT FIELD WIRE TO COMPRESSOR CONTACTOR (CC1).
4. REMOVE J3 AT (CC1) TO INSTALL LOW AMBIENT ACCESSORY.
5. IF REQUIRED, ATTACH CRANKCASE HEATER ACCESSORY TO CC1 (L1) AND CC1 (L2).
6. COMPRESSOR MOTOR THERMALLY PROTECTED. ALL 3 PHASE MODELS ARE PROTECTED UNDER PRIMARY SINGLE PHASE CONDITIONS.
7. TRANSFORMER FACTORY WIRED AS SHOWN BELOW. CHANGE PRIMARY VOLTAGE CONNECTIONS FOR ALTERNATE VOLTAGES, IF REQUIRED.

UNIT VOLTAGES - HZ	TRANSFORMER TERM.
200-220 - 50HZ	200
208 - 60HZ	230
220 - 60HZ	230
380 - 60HZ	400
380-415 - 50HZ	400
460 - 60HZ	460
575 - 60HZ	230

8. LOW VOLTAGE CIRCUIT IS N.E.C. CLASS 2 WITH A CLASS 2 TRANSFORMER, 24VAC 50/60 HZ SUPPLIED.
9. MOTOR FACTORY WIRED FOR CORRECT VOLTAGE.
10. REMOVE PL36 FOR ECOMOMIZER ACCESSORY. PL34 AND PL36 LOCATED IN RETURN AIR SECTION.
11. CONNECT TO ECONOMIZER LOGIC MODULE.

COMPONENT CODES

BC	BLOWER CONTACTOR
CA	COMFORT ALERT MODULE
CC	COMPRESSOR CONTACTOR
CCH	CRANKCASE HEATER
CDS	CLOG DRAIN SENSOR
CFS	CLOGGED FILTER SWITCH
COMP	COMPRESSOR
CT	CONTROL TRANSFORMER
DAT	DISCHARGE AIR SENSOR
DISC	DISCONNECT SWITCH
ELM	ECONOMIZER LOGIC MODULE
FLMS	FLAME SENSOR
FP	FAN PROVING
FS	FREEZE SENSOR
FT	FREEZE STAT
GFCO	GROUND FAULT CONVENIENCE OUTLET
GL	GROUND LUG
GND	GROUND
HPC	HIGH PRESSURE CONTROL
IBM	INDOOR BLOWER MOTOR
IDM	INDUCED DRAFT MOTOR
IFC	INTEGRATED FURNACE CONTROL
LAC	LOW AMBIENT CONTROL
LPC	LOW PRESSURE CONTROL
MRLC	MANUAL RESET LIMIT CONTROL
NPC	NEGATIVE PRESSURE SWITCH
OAT	OUTSIDE AIR SENSOR
OFM	OUTDOOR FAN MOTOR
PL	PLUG
PT	POWER TRANSFORMER
RAT	RETURN AIR SENSOR
RC	RUN CAPACITOR
RTU-C	ROOFTOP UNIT CONTROL
SE	SPARK ELECTRODE
TB	TERMINAL BLOCK

WIRE COLOR CODE

BK.....BLACK	G.....GREEN	PR.....PURPLE
BR.....BROWN	GY.....GRAY	R.....RED
BL.....BLUE	O.....ORANGE	W .....WHITE
		Y.....YELLOW

ELECTRICAL WIRING SCHEMATIC

GE NON DDC 1-STG 090/102/120
575V 3PH 60Hz

APPROVED:	CHECKED:	ORIGINAL RELEASE NO.:
MODELED BY: TCJW	DATE: 10-18-17	R-1071S089
PART NO.: 90-106178-04		REV: 03

FIGURE 29

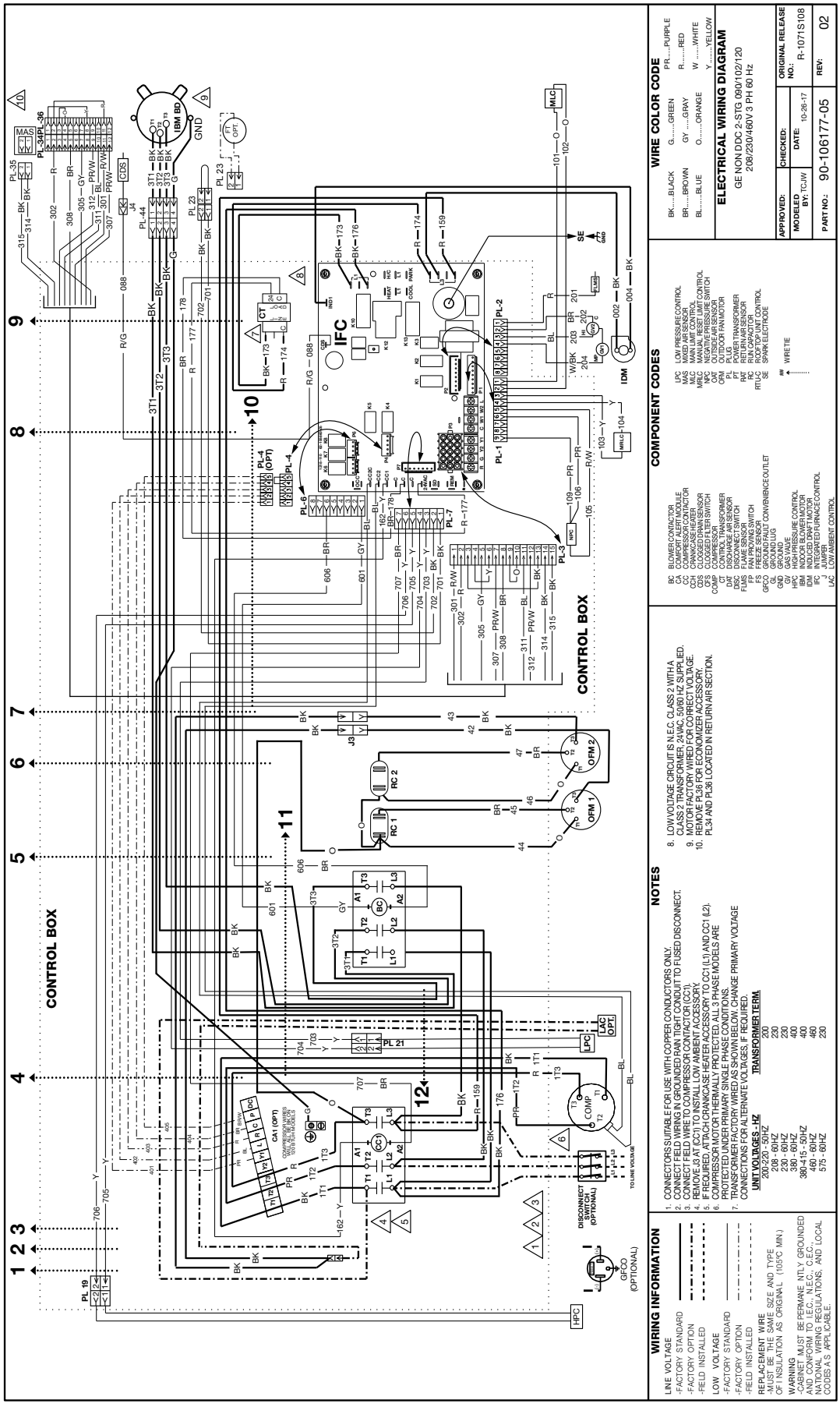
ELECTRICAL WIRING DIAGRAM
GE NON DDC 2-STG 090/102/120
208/230/460V 3 PH 60 Hz
WIRE COLOR CODE
BK.....BLACK
BR.....BROWN
BL.....BLUE
G.....GREEN
GY.....GRAY
O.....ORANGE
PR.....PURPLE
R.....RED
W.....WHITE
Y.....YELLOW
COMPONENT CODES
BC BLOWER CONTACTOR
CA CAPACITY ADJ. MODULE
CC COMPRESSOR CONTACTOR
CCH CRANKCASE HEATER
CDS CLOGGED DRAIN SENSOR
CFS CLOGGED FILTER SWITCH
COMP COMPRESSOR
CT CONTROL TRANSFORMER
DAT DISCHARGE AIR SENSOR
DSC DISCONNECT SWITCH
FU1-FU5 FUSE ASSEMBLY
FP FAN PROVING SWITCH
FS FREEZE SENSOR
GFCO GFCI CONVENIENCE OUTLET
GL GROUND LUG
GND GROUND
GV GAS VALVE
HPC HIGH PRESSURE CONTROL
IBM INDOOR BLOWER MOTOR
IDM INDOOR DISPLAY MODULE
IFC INTEGRATED FURNACE CONTROL
J JUMPER
LAC LOW AMBIENT CONTROL
LPC LOW PRESSURE CONTROL
MAS MIXED AIR SENSOR
MAT MAIN AIR TEMP.
MLC MAIN LIMIT CONTROL
MPC MANUAL PUMP CONTROL
NPC NEGATIVE PRESSURE SWITCH
OAT OUTSIDE AIR SENSOR
OFM OUTDOOR FAN MOTOR
PL PLUG
RT RETURN AIR SENSOR
RC RUN CAPACITOR
RTUC ROOF TOP UNIT CONTROL
SE SPARK ELECTRODE
WIRE TIE
CONTROL BOX
WIRING INFORMATION
LINE VOLTAGE
-FACTORY STANDARD
-FACTORY OPTION
-FIELD INSTALLED
LOW VOLTAGE
-FACTORY STANDARD
-FACTORY OPTION
-FIELD INSTALLED
REPLACEMENT WIRE
-MUST BE THE SAME SIZE AND TYPE OF INSULATION AS ORIGINAL (105°C MIN.)
WARNING
-GROUND MUST BE PERMANENT, VERIFY GROUNDED AND CONFORM TO I.E.C., C.E.C., NATIONAL WIRING REGULATIONS, AND LOCAL CODES AS APPLICABLE.
NOTES
1. CONNECTORS SUITABLE FOR USE WITH COPPER CONDUCTORS ONLY.
2. CONNECT FIELD WIRING IN GROUNDED RAIN TIGHT CONDUIT TO FUSED DISCONNECT.
3. CONNECT FIELD WIRE TO COMPRESSOR CONTACTOR (CC1).
4. REMOVE J3 AT (CC1) TO INSTALL LOW AMBIENT ACCESSORY.
5. IF REQUIRED, ATTACH CRANKCASE HEATER ACCESSORY TO CC1 (L1) AND CC1 (L2).
6. COMPRESSOR MOTOR THERMALLY PROTECTED. ALL 3 PHASE MODELS ARE PROTECTED UNDER PRIMARY SINGLE PHASE CONDITIONS.
7. TRANSFORMER PRIMARY WINDINGS HAVE BEEN SWITCHED TO CHANGE PRIMARY VOLTAGE CONNECTIONS FOR ALTERNATE VOLTAGES, IF REQUIRED.
UNIT VOLTAGES - HZ
200-220 - 50HZ
208 - 60HZ
230 - 60HZ
380 - 60HZ
380-415 - 50HZ
460 - 60HZ
575 - 60HZ
TRANSFORMER TERM.
200
230
230
230
400
400
460
230
8. LOW VOLTAGE CIRCUIT IS N.E.C. CLASS 2 WITH A CLASS 2 TRANSFORMER 24 VAC SUPPLY SUPPLIED.
9. MOTOR FACTORY WIRED FOR CORRECT VOLTAGE.
10. REMOVE PL36 FOR ECONOMIZER ACCESSORY. PL34 AND PL36 LOCATED IN RETURN AIR SECTION.
APPROVED:
MODELED BY: TC-JW
CHECKED:
DATE: 10-28-17
ORIGINAL RELEASE NO.: R-1071S108
PART NO.: 90-106177-05
REV: 02

FIGURE 30

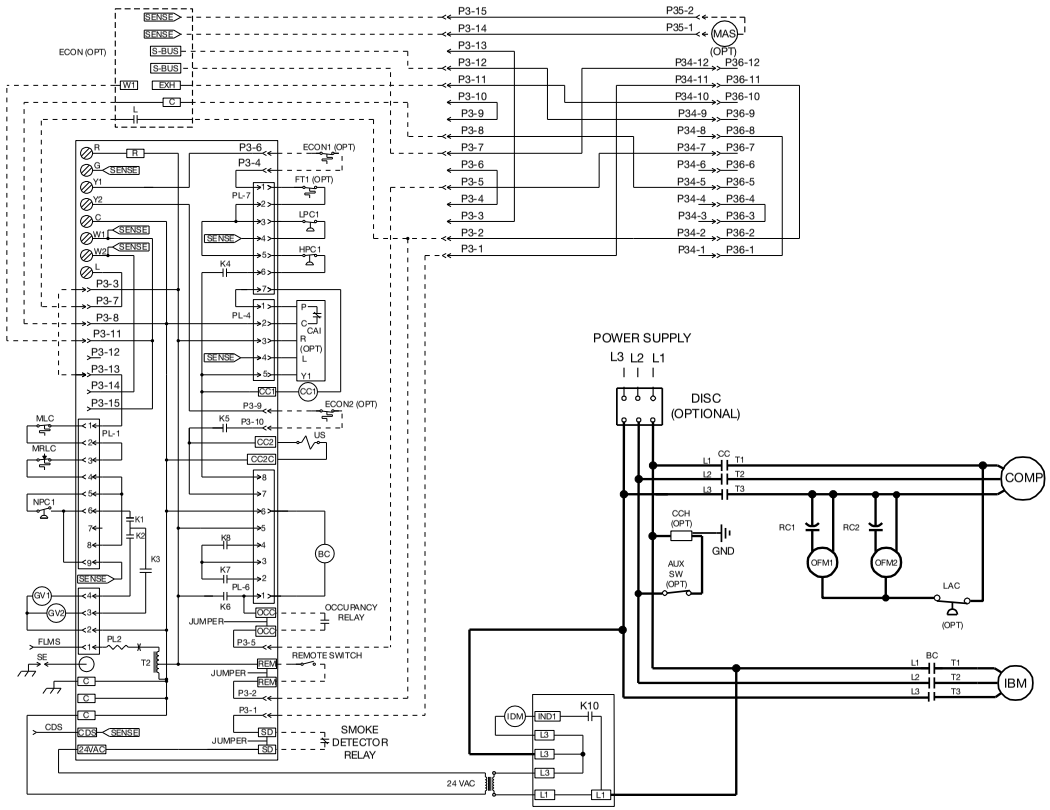

ALARM CODES

CODE	Description	FAULT LEVEL ~0,1,2,3*
0	STANDBY	0
c	COMPRESSOR ON – Low (Flashing if in time delay)	0
C	COMPRESSOR ON – High (Flashing if in time delay)	0
E	Economizer Cooling – No Compressor	0
F	CONTINUOUS FAN	0
h	HEAT ON – Low Stage	0
H	GAS HEAT ON – High Stage	0
4	Comfort Alert Code 4 for Compressor Circuit 1	3
5	Comfort Alert Code 5 for Compressor Circuit 1	3
6	Comfort Alert Code 6 for Compressor Circuit 1	3
7	Comfort Alert Code 7 for Compressor Circuit 1	3
8	Comfort Alert Code 8 for Compressor Circuit 1	3
9	Comfort Alert Code 9 for Compressor Circuit 1	3
11	FAILED IGNITION	2
12	LO FLAME SENSE	1
13	FLAME LOST	2
14	UNEXPECTED FLAME	3
15	2nd Stage Gas valve improper voltage	2
20	REFRIGERANT LOW PRESSURE SWITCH OPEN – CIRCUIT 1	2
21	REFRIGERANT LOW PRESSURE SWITCH OPEN – CIRCUIT 2	2
22	MAIN LIMIT OPEN	2
29	REFRIGERANT HIGH PRESSURE SWITCH OPEN – CIRCUIT 1	2
30	REFRIGERANT HIGH PRESSURE SWITCH OPEN – CIRCUIT 2	2
33	MRLC (Rollout Limit) OPEN	2
34	Comfort Alert Code 4 for Compressor Circuit 2	3
35	Comfort Alert Code 5 for Compressor Circuit 2	3
36	Comfort Alert Code 6 for Compressor Circuit 2	3
37	Comfort Alert Code 7 for Compressor Circuit 2	3
38	Comfort Alert Code 8 for Compressor Circuit 2	3
39	Comfort Alert Code 9 for Compressor Circuit 2	3
42	Invalid Thermostat Selection	1
44	1st Stage COMBUSTION PRESS SWITCH CLOSED	2
46	1st Stage COMBUSTION PRESS SWITCH OPEN	2
49	FREEZE SWITCH OPEN – CIRCUIT 1	2
50	FREEZE SWITCH OPEN -CIRCUIT 2	2
55	2nd Stage COMBUSTION PRESS SWITCH CLOSED	2
57	2nd Stage COMBUSTION PRESS SWITCH OPEN	2,3
59	Condensate Drain Plugged	3
61	Blower Fault – NO RUN	3
83	Condenser Coil Temp Sensor Fail-OCT	2
84	Outdoor Air Temperature Sensor Fail-OAT	2
88	Emergency Stop Fault	3
93	CONTROL Fault	3
97	Smoke Detection	3

*Fault levels: 0 = none, 1=warning, 2= problem, 3=shutdown

WIRING INFORMATION

LINE VOLTAGE
- -FACTORY STANDARD
- -FACTORY OPTION
- -FIELD INSTALLED

LOW VOLTAGE
- -FACTORY STANDARD
- -FACTORY OPTION
- -FIELD INSTALLED

REPLACEMENT WIRE
-MUST BE THE SAME SIZE AND TYPE OF INSULATION AS ORIGINAL (105°C MIN.)

WARNING
-CABINET MUST BE PERMANENTLY GROUNDED AND CONFORM TO I.E.C., N.E.C., C.E.C., NATIONAL WIRING REGULATIONS, AND LOCAL CODES AS APPLICABLE.

NOTES

1. CONNECTORS SUITABLE FOR USE WITH COPPER CONDUCTORS ONLY.
2. CONNECT FIELD WIRING IN GROUNDED RAIN TIGHT CONDUIT TO FUSED DISCONNECT.
3. CONNECT FIELD WIRE TO COMPRESSOR CONTACTOR (CC1).
4. REMOVE J3 AT (CC1) TO INSTALL LOW AMBIENT ACCESSORY.
5. IF REQUIRED, ATTACH CRANKCASE HEATER ACCESSORY TO CC1 (L1) AND CC1 (L2).
6. COMPRESSOR MOTOR THERMALLY PROTECTED. ALL 3 PHASE MODELS ARE PROTECTED UNDER PRIMARY SINGLE PHASE CONDITIONS.
7. TRANSFORMER FACTORY WIRED AS SHOWN BELOW. CHANGE PRIMARY VOLTAGE CONNECTIONS FOR ALTERNATE VOLTAGES, IF REQUIRED.

UNIT VOLTAGES - HZ	TRANSFORMER TERM.
200-220 - 50HZ	200
208 - 60HZ	230
230 - 60HZ	230
380 - 60HZ	400
380-415 - 50HZ	400
460 - 60HZ	460
575 - 60HZ	230

8. LOW VOLTAGE CIRCUIT IS N.E.C. CLASS 2 WITH A CLASS 2 TRANSFORMER, 24VAC, 50/60 HZ SUPPLIED.
9. MOTOR FACTORY WIRED FOR CORRECT VOLTAGE.
10. REMOVE PL36 FOR ECONOMIZER ACCESSORY. PL34 AND PL36 LOCATED IN RETURN AIR SECTION.

COMPONENT CODES

BC	BLOWER CONTACTOR	LPC	LOW PRESSURE CONTROL
CA	COMFORT ALERT MODULE	MAS	MIXED AIR SENSOR
CC	COMPRESSOR CONTACTOR	MLC	MAIN LIMIT CONTROL
CCH	CRANKCASE HEATER	MRLC	MANUAL RESET LIMIT CONTROL
CDS	CLOGGED DRAIN SENSOR	NPC	NEGATIVE PRESSURE SWITCH
CFS	CLOGGED FILTER SWITCH	OAT	OUTSIDE AIR SENSOR
COMP	COMPRESSOR	OFM	OUTDOOR FAN MOTOR
CT	CONTROL TRANSFORMER	PL	PLUG
DAT	DISCHARGE AIR SENSOR	PT	POWER TRANSFORMER
DISC	DISCONNECT SWITCH	RAT	RETURN AIR SENSOR
FLMS	FLAME SENSOR	RC	RUN CAPACITOR
FP	FAN PROVING	RTU-C	ROOFTOP UNIT CONTROL
FS	FREEZE SENSOR	SE	SPARK ELECTRODE
GFCO	GROUND FAULT CONVENIENCE OUTLET	US	UNLOADER SOLENOID
GL	GROUND LUG		
GND	GROUND		
HPC	HIGH PRESSURE CONTROL		
IBM	INDOOR BLOWER MOTOR		
IDM	INDUCED DRAFT MOTOR		
IFC	INTEGRATED FURNACE CONTROL		
LAC	LOW AMBIENT CONTROL		

WIRE COLOR CODE

BK.....BLACK	G.....GREEN	PR.....PURPLE
BR.....BROWN	GY.....GRAY	R.....RED
BL.....BLUE	O.....ORANGE	W .....WHITE
		Y.....YELLOW

ELECTRICAL WIRING SCHEMATIC

GE NON DDC 2-STG 090/102/120
208/230/460V 3 PH 60 Hz

APPROVED:	CHECKED:	ORIGINAL RELEASE NO.:
MODELED BY: TCJW	DATE: 10-27-17	R-1071S108
PART NO.: 90-106178-05		REV: 02

FIGURE 31

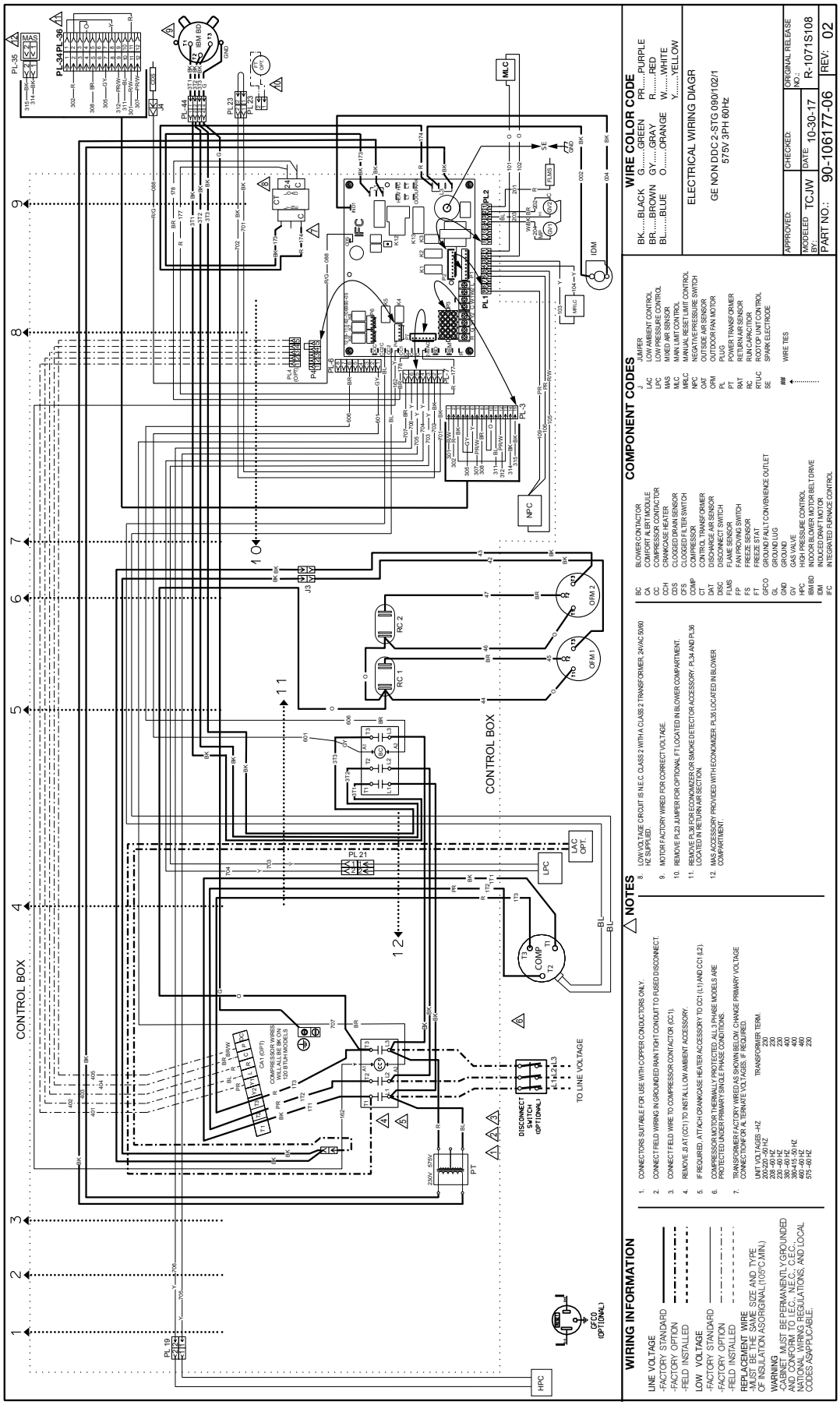
CONTROL BOX
CONTROL BOX
WIRE COLOR CODE
BK.....BLACK G.....GREEN PR.....PURPLE
BR.....BROWN GY.....GRAY R.....RED
BL.....BLUE O.....ORANGE W.....WHITE
Y.....YELLOW
ELECTRICAL WIRING DIAGR
GE NON DDC 2-STG 090/102/1
575V 3PH 60HZ
APPROVED:
MODELED BY: TCJW
CHECKED:
DATE: 10-30-17
ORIGINAL RELEASE NO.: R-1071S108
PART NO.: 90-106177-06
REV: 02
COMPONENT CODES
BC BLOWER CONTACTOR
CA CONVENIENCE OUTLET
CC COMPRESSOR CONTACTOR
CCH CRANKCASE HEATER
CDS CLOGGED DRAIN SENSOR
CFS CLOGGED FILTER SWITCH
COMP COMPRESSOR
CT CONTROL TRANSFORMER
DAT DISCHARGE AIR SENSOR
DISC DISCONNECT SWITCH
FLMS FLAME SENSOR
FP FAN PROVING SWITCH
FS FREEZE STAT
FT FUSE 25 AMP
GFCO GROUND FAULT CONVENIENCE OUTLET
GL GROUND LUG
GND GROUND
GV GAS VALVE
HPC HIGH PRESSURE CONTROL
IBM BLO INDOOR BLOWER MOTOR BELT DRIVE
IDM INDUCED DRAFT MOTOR
IFC INTEGRATED FURNACE CONTROL
J JUMPER
LAC LOW AMBIENT CONTROL
LPC LOW PRESSURE CONTROL
MAS MIXED AIR SENSOR
MLC MAN LIMIT CONTROL
MRLC MANUAL RESET LIMIT CONTROL
NPC NEGATIVE PRESSURE SWITCH
OAT OUTSIDE AIR SENSOR
OFM OUTDOOR FAN MOTOR
PL PLUG
PT POWER TRANSFORMER
RAT RETURN AIR SENSOR
RC RUN CAPACITOR
RTUC ROOFTOP UNIT CONTROL
SE SPARK ELECTRODE
WIRE TIES
WIRING INFORMATION
LINE VOLTAGE
-FACTORY STANDARD
-FACTORY OPTION
-FIELD INSTALLED
LOW VOLTAGE
-FACTORY STANDARD
-FACTORY OPTION
-FIELD INSTALLED
REPLACEMENT WIRE
-MUST BE THE SAME SIZE AND TYPE OF INSULATION ASORIGINAL(105°C.MIN.)
WARNING
-CABINET MUST BE PERMANENTLY GROUNDED AND CONFORM TO I.E.C., N.E.C., C.E.C., AND ALL OTHER LOCAL REGULATIONS, AND LOCAL CODES ASAPPLICABLE.
NOTES
1. CONNECTORS SUITABLE FOR USE WITH COPPER CONDUCTORS ONLY.
2. CONNECT FIELD WIRING IN GROUNDED RAIN TIGHT CONDUIT TO FUSED DISCONNECT.
3. CONNECT FIELD WIRE TO COMPRESSOR CONTACTOR (CC1).
4. REMOVE J5 BAT (CC1) TO INSTALL LOW AMBIENT ACCESSORY.
5. IF REQUIRED, ATTACH CRANKCASE HEATER ACCESSORY TO CC1 (L11) AND CC1 (L2).
6. COMPRESSOR MOTOR THERMALLY PROTECTED. ALL 3 PHASE MODELS ARE PROTECTED UNDER PRIMARY SINGLE PHASE CONDITIONS.
7. TRANSFORMER FACTORY WIRED AS SHOWN BELOW. CHANGE PRIMARY VOLTAGE CONNECTIONS IF ALTERNATE VOLTAGE IS REQUIRED.
UNIT VOLTAGE -HZ TRANSFORMER TERM.
200-230-460 -HZ 460
208-230 -HZ 230
380-415-50 HZ 230
380-415-50 HZ 400
460 -60 HZ 460
575 -60 HZ 460
415 -50 HZ 230
575 -60 HZ 230
8. LOW VOLTAGE CIRCUIT IS N.E.C. CLASS 2 WITH A CLASS 2 TRANSFORMER. 24VAC 50/60 HZ SUPPLIED.
9. MOTOR FACTORY WIRED FOR CORRECT VOLTAGE.
10. REMOVE PL23 JUMPER FOR OPTIONAL FT LOCATED IN BLOWER COMPARTMENT.
11. REMOVE PL36 FOR ECONOMIZER OR SMOKE DETECTOR ACCESSORY. PL34 AND PL36 LOCATED IN RETURN AIR SECTION.
12. MAS ACCESSORY PROVIDED WITH ECONOMIZER. PL35 LOCATED IN BLOWER COMPARTMENT.

FIGURE 32

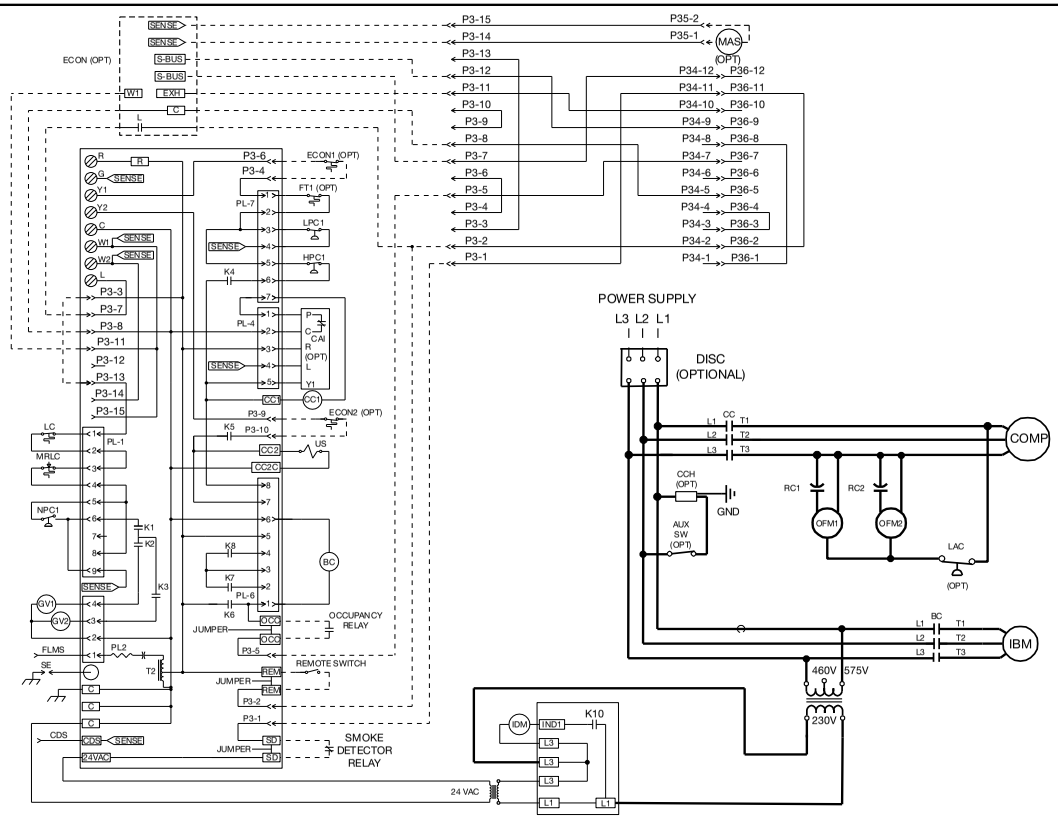

ALARM CODES

CODE	Description	FAULT LEVEL – 0,1,2,3*
0	STANDBY	0
c	COMPRESSOR ON – Low (Flashing if in time delay)	0
C	COMPRESSOR ON – High (Flashing if in time delay)	0
E	Economizer Cooling – No Compressor	0
F	CONTINUOUS FAN	0
h	HEAT ON – Low Stage	0
H	GAS HEAT ON – High Stage	0
4	Comfort Alert Code 4 for Compressor Circuit 1	3
5	Comfort Alert Code 5 for Compressor Circuit 1	3
6	Comfort Alert Code 6 for Compressor Circuit 1	3
7	Comfort Alert Code 7 for Compressor Circuit 1	3
8	Comfort Alert Code 8 for Compressor Circuit 1	3
9	Comfort Alert Code 9 for Compressor Circuit 1	3
11	FAILED IGNITION	2
12	LO FLAME SENSE	1
13	FLAME LOST	2
14	UNEXPECTED FLAME	3
15	2nd Stage Gas valve improper voltage	2
20	REFRIGERANT LOW PRESSURE SWITCH OPEN – CIRCUIT 1	2
21	REFRIGERANT LOW PRESSURE SWITCH OPEN – CIRCUIT 2	2
22	MAIN LIMIT OPEN	2
29	REFRIGERANT HIGH PRESSURE SWITCH OPEN – CIRCUIT 1	2
30	REFRIGERANT HIGH PRESSURE SWITCH OPEN – CIRCUIT 2	2
33	MRLC (Rollout Limit) OPEN	2
34	Comfort Alert Code 4 for Compressor Circuit 2	3
35	Comfort Alert Code 5 for Compressor Circuit 2	3
36	Comfort Alert Code 6 for Compressor Circuit 2	3
37	Comfort Alert Code 7 for Compressor Circuit 2	3
38	Comfort Alert Code 8 for Compressor Circuit 2	3
39	Comfort Alert Code 9 for Compressor Circuit 2	3
42	Invalid Thermostat Selection	1
44	1st Stage COMBUSTION PRESS SWITCH CLOSED	2
46	1st Stage COMBUSTION PRESS SWITCH OPEN	2
49	FREEZE SWITCH OPEN – CIRCUIT 1	2
50	FREEZE SWITCH OPEN -CIRCUIT 2	2
55	2nd Stage COMBUSTION PRESS SWITCH CLOSED	2
57	2nd Stage COMBUSTION PRESS SWITCH OPEN	2,3
59	Condensate Drain Plugged	3
61	Blower Fault – NO RUN	3
83	Condenser Coil Temp Sensor Fail-OCT	2
84	Outdoor Air Temperature Sensor Fail-OAT	2
88	Emergency Stop Fault	3
93	CONTROL Fault	3
97	Smoke Detection	3

*Fault levels:0 = none, 1=warning, 2= problem, 3=shutdown

WIRING INFORMATION

LINE VOLTAGE
- FACTORY STANDARD
- FACTORY OPTION
- FIELD INSTALLED

LOW VOLTAGE
- FACTORY STANDARD
- FACTORY OPTION
- FIELD INSTALLED

REPLACEMENT WIRE
-MUST BE THE SAME SIZE AND TYPE OF INSULATION AS ORIGINAL (105°C MIN.)

WARNING
-CABINET MUST BE PERMANENTLY GROUNDED AND CONFORM TO I.E.C., N.E.C., C.E.C., NATIONAL WIRING REGULATIONS, AND LOCAL CODES A S APPLICABLE.

NOTES

1. CONNECTORS SUITABLE FOR USE WITH COPPER CONDUCTORS ONLY.
2. CONNECT FIELD WIRING IN GROUNDED RAIN TIGHT CONDUIT TO FUSED DISCONNECT.
3. CONNECT FIELD WIRE TO COMPRESSOR CONTACTOR (CC1).
4. REMOVE J3 AT (CC1) TO INSTALL LOW AMBIENT ACCESSORY.
5. IF REQUIRED, ATTACH CRANKCASE HEATER ACCESSORY TO CC1 (L1) AND CC1 (L2).
6. COMPRESSOR MOTOR THERMALLY PROTECTED. ALL 3 PHASE MODELS ARE PROTECTED UNDER PRIMARY SINGLE PHASE CONDITIONS.
7. TRANSFORMER FACTORY WIRED AS SHOWN BELOW. CHANGE PRIMARY VOLTAGE CONNECTIONS FOR ALTERNATE VOLTAGES, IF REQUIRED.

UNIT VOLTAGES - HZ	TRANSFORMER TERM.
200-220 - 50HZ	200
208 - 60HZ	230
230 - 60HZ	230
380 - 60HZ	400
380-415 - 50HZ	400
460 - 60HZ	460
575 - 60HZ	230

8. LOW VOLTAGE CIRCUIT IS N.E.C. CLASS 2 WITH A CLASS 2 TRANSFORMER, 24VAC 50/60 HZ SUPPLIED.
9. MOTOR FACTORY WIRED FOR CORRECT VOLTAGE.
10. REMOVE PL36 FOR ECOMOMIZER ACCESSORY. PL34 AND PL36 LOCATED IN RETURN AIR SECTION.
11. CONNECT TO ECONOMIZER LOGIC MODULE.

COMPONENT CODES

BC	BLOWER CONTACTOR
CA	COMFORT ALERT MODULE
CC	COMPRESSOR CONTACTOR
CCH	CRANKCASE HEATER
CDS	CLOG DRAIN SENSOR
CFS	CLOGGED FILTER SWITCH
COMP	COMPRESSOR
CT	CONTROL TRANSFORMER
DAT	DISCHARGE AIR ESENSOR
DISC	DISCONNECT SWITCH
ELM	ECONOMIZER LOGIC MODULE
FLMS	FLAME SENSOR
FP	FAN PROVING
FS	FREEZE SENSOR
FT	FREEZE STAT
GFCO	GROUND FAULT CONVENIENCE OUTLET
GL	GROUND LUG
GND	GROUND
HPC	HIGH PRESSURE CONTROL
IBM	INDOOR BLOWER MOTOR
IDM	INDUCED DRAFT MOTOR
IFC	INTEGRATED FURNACE CONTROL
LAC	LOW AMBIENT CONTROL
LPC	LOW PRESSURE CONTROL
MRLC	MANUAL RESET LIMIT CONTROL
NPC	NEGATIVE PRESSURE SWITCH
OAT	OUTSIDE AIR SENSOR
OFM	OUTDOOR FAN MOTOR
PL	PLUG
PT	POWER TRANSFORMER
RAT	RETURN AIR SENSOR
RC	RUN CAPACITOR
RTU-C	ROOFTOP UNIT CONTROL
SE	SPARK ELECTRODE
TB	TERMINAL BLOCK
US	UNLOADER SOLENOID

WIRE COLOR CODE

BK.....BLACK	G.....GREEN	P.R.....PURPLE
BR.....BROWN	GY.....GRAY	R.....RED
BL.....BLUE	O.....ORANGE	W .....WHITE
		Y.....YELLOW

ELECTRICAL WIRING SCHEMATIC

GE NON DDC 2-STG 090/102/120
575V 3PH 60Hz

APPROVED:	CHECKED:	ORIGINAL RELEASE NO.:
MODELED BY: TCJW	DATE: 10-30-17	R-1071S108
PART NO.: 90-106178-06		REV: 02

FIGURE 33

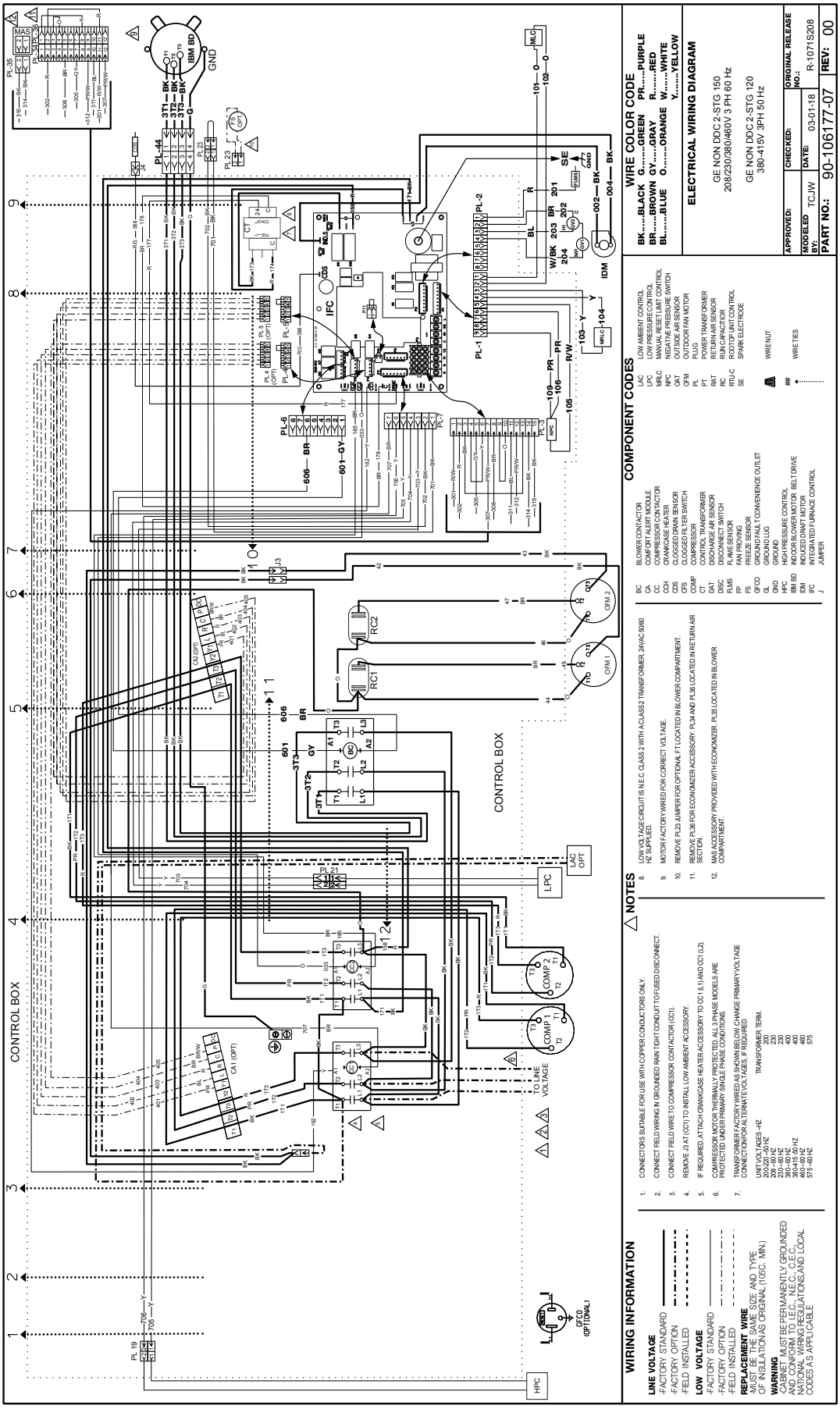
CONTROL BOX
CONTROL BOX
WIRE COLOR CODE
BK.....BLACK G.....GREEN PR.....PURPLE
BR.....BROWN GY.....GRAY R.....RED
BL.....BLUE O.....ORANGE W.....WHITE
Y.....YELLOW
ELECTRICAL WIRING DIAGRAM
GE NON DDC 2-STG 150
208/230/380/460V 3 PH 60 Hz
GE NON DDC 2-STG 120
380-415V 3PH 50 Hz
APPROVED:
MODELED BY: TCJW
CHECKED:
DATE: 03-01-18
ORIGINAL RELEASE NO.: R-1071S208
PART NO.: 90-106177-07
REV: 00
COMPONENT CODES
WIRING INFORMATION
NOTES
LINE VOLTAGE
-FACTORY STANDARD
-FACTORY OPTION
-FIELD INSTALLED
LOW VOLTAGE
-FACTORY STANDARD
-FACTORY OPTION
-FIELD INSTALLED
REPLACEMENT WIRE
-MUST BE THE SAME SIZE AND TYPE OF INSULATION AS ORIGINAL (105C. MIN.)
WARNING
-CABINET MUST BE PERMANENTLY GROUNDED AND CONFORM TO N.E.C., NEC., C.E.C., NATIONAL WIRING REGULATIONS, AND LOCAL CODES AS APPLICABLE
CONNECTORS SUITABLE FOR USE WITH COPPER CONDUCTORS ONLY.
CONNECT FIELD WIRING IN GROUNDED RAIN TIGHT CONDUIT TO FUSED DISCONNECT.
CONNECT FIELD WIRE TO COMPRESSOR CONTACTOR (CC1).
REMOVE J3 AT (CC1) TO INSTALL LOW AMBIENT ACCESSORY.
IF REQUIRED, ATTACH CRANKCASE HEATER ACCESSORY TO CC1 (L11) AND CC1 (L2).
COMPRESSOR MOTOR THERMALLY PROTECTED. ALL 3 PHASE MODELS ARE PROTECTED UNDER PRIMARY SINGLE PHASE CONDITIONS.
TRANSFORMER FACTORY WIRED AS SHOWN BELOW. CHANGE PRIMARY VOLTAGE CONNECTIONS AS ALTERNATE VOLTAGES, IF REQUIRED.
UNIT VOLTAGES –HZ TRANSFORMER TERM.
200/208-60 HZ 200
208-60 HZ 208
220-60 HZ 220
230-60 HZ 230
380-415-50 HZ 380
460-60 HZ 460
575-60 HZ 575
LOW VOLTAGE CIRCUIT IS N.E.C. CLASS 2 WITH A CLASS 2 TRANSFORMER, 24VAC 50/60 HZ SUPPLIED.
MOTOR FACTORY WIRED FOR CORRECT VOLTAGE.
REMOVE PL23 JUMPER FOR OPTIONAL FT LOCATED IN BLOWER COMPARTMENT.
REMOVE PL36 FOR ECONOMIZER ACCESSORY. PL34 AND PL36 LOCATED IN RETURN AIR SECTION.
MAS ACCESSORY PROVIDED WITH ECONOMIZER. PL35 LOCATED IN BLOWER COMPARTMENT.
TO LINE VOLTAGE
GFCD (OPTIONAL)
HPC
LPC
LAC OPT
CA1 (OPT)
CAL (OPT)
COMP 1
COMP 2
RC1
RC2
OFM 1
OFM 2
IFC
IDM
GND
GND
GND

FIGURE 34

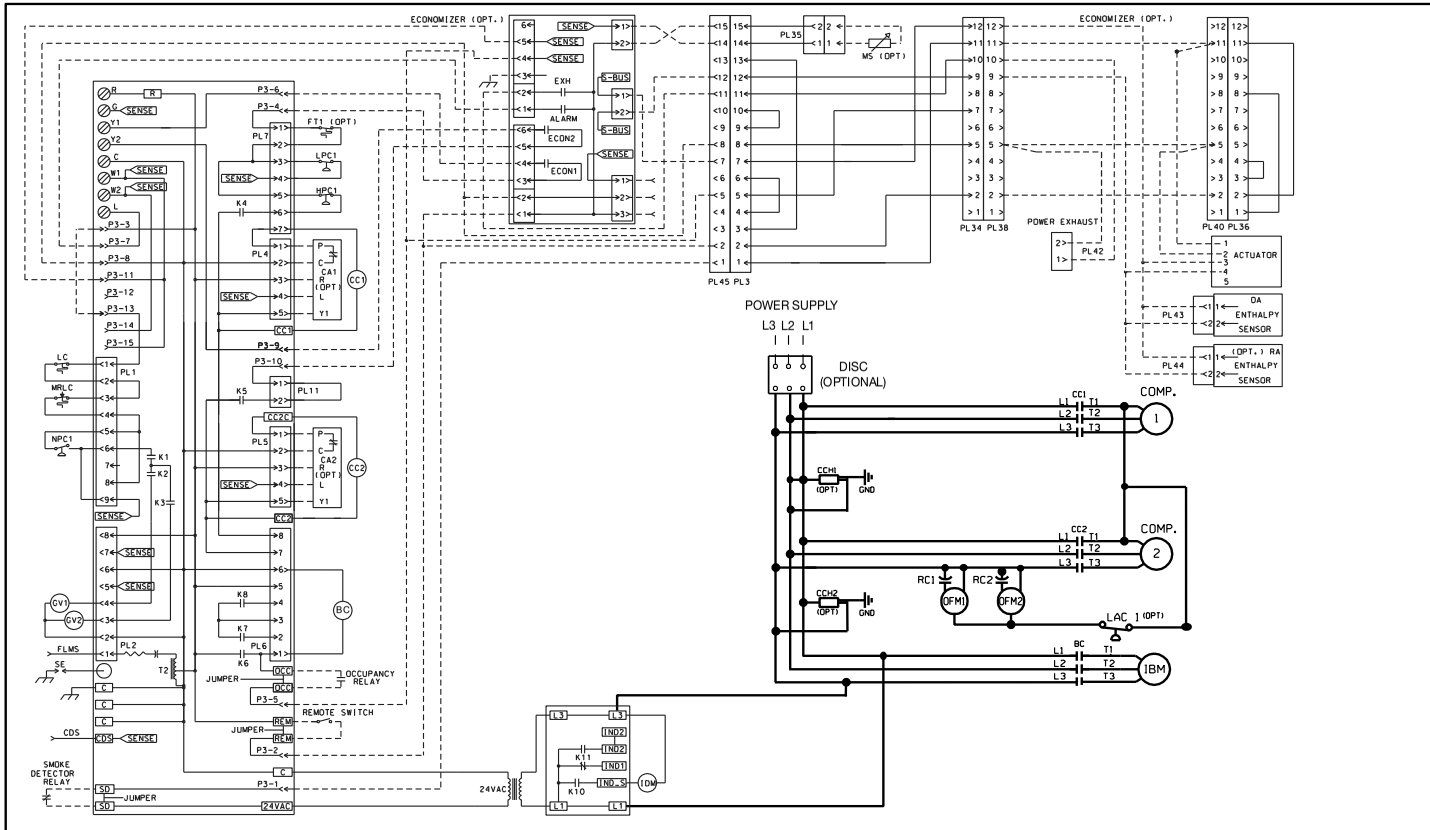

ALARM CODES

CODE	Description	FAULT LEVEL -0,1,2,3*
0	STANDBY	0
c	COMPRESSOR ON –Low (Flashing if in time delay)	0
C	COMPRESSOR ON –High (Flashing if in time delay)	0
E	Economizer Cooling– No Compressor	0
F	CONTINUOUS FAN	0
h	HEAT ON – Low Stage	0
H	GAS HEATON – High Stage	0
4	Comfort Alert Code 4 for Compressor Circuit 1	3
5	Comfort Alert Code 5 for Compressor Circuit 1	3
6	Comfort Alert Code 6 for Compressor Circuit 1	3
7	Comfort Alert Code 7 for Compressor Circuit 1	3
8	Comfort Alert Code 8 for Compressor Circuit 1	3
9	Comfort Alert Code 9 for Compressor Circuit 1	3
11	FAILED IGNITION	2
12	LO FLAME SENSE	1
13	FLAME LOST	2
14	UNEXPECTED FLAME	3
15	2nd Stage Gas valve improper voltage	2
20	REFRIGERANT LOW PRESSURE SWITCH OPEN – CIRCUIT 1	2
21	REFRIGERANT LOW PRESSURE SWITCH OPEN – CIRCUIT 2	2
22	MAIN LIMIT OPEN	2
29	REFRIGERANT HIGH PRESSURE SWITCH OPEN – CIRCUIT 1	2
30	REFRIGERANT HIGH PRESSURE SWITCH OPEN – CIRCUIT 2	2
33	MRLC (Rollout Limit) OPEN	2
34	Comfort Alert Code 4 for Compressor Circuit 2	3
35	Comfort Alert Code 5 for Compressor Circuit 2	3
36	Comfort Alert Code 6 for Compressor Circuit 2	3
37	Comfort Alert Code 7 for Compressor Circuit 2	3
38	Comfort Alert Code 8 for Compressor Circuit 2	3
39	Comfort Alert Code 9 for Compressor Circuit 2	3
42	Invalid Thermostat Selection	1
44	1st Stage COMBUSTION PRESS SWITCH CLOSED	2
46	1st Stage COMBUSTION PRESS SWITCH OPEN	2
49	FREEZE SWITCH OPEN – CIRCUIT 1	2
50	FREEZE SWITCH OPEN - CIRCUIT 2	2
55	2nd Stage COMBUSTION PRESS SWITCH CLOSED	2
57	2nd Stage COMBUSTION PRESS SWITCH OPEN	2,3
59	Condensate Drain Plugged	3
61	Blower Fault – NO RUN	3
83	Condenser Coil Temp Sensor Fail-OCT	2
84	Outdoor Air Temperature Sensor Fail-OAT	2
88	Emergency Stop Fault	3
93	CONTROL Fault	3
97	Smoke Detection	3

*Fault levels: 0 = none, 1=warning, 2= problem, 3=shutdown

WIRING INFORMATION

LINE VOLTAGE
- FACTORY STANDARD
- FACTORY OPTION
- FIELD INSTALLED

LOW VOLTAGE
- FACTORY STANDARD
- FACTORY OPTION
- FIELD INSTALLED

REPLACEMENT WIRE
- MUST BE THE SAME SIZE AND TYPE OF INSULATION AS ORIGINAL (105°C MIN.)

WARNING
- CABINET MUST BE PERMANENTLY GROUNDED AND CONFORM TO I.E.C., N.E.C., C.E.C., NATIONAL WIRING REGULATIONS, AND LOCAL CODES AS APPLICABLE.

NOTES

1. CONNECTORS SUITABLE FOR USE WITH COPPER CONDUCTORS ONLY.
2. CONNECT FIELD WIRING IN GROUNDED RAIN TIGHT CONDUIT TO FUSED DISCONNECT.
3. CONNECT FIELD WIRE TO COMPRESSOR CONTACTOR (CC1).
4. REMOVE J3 AT (CC1) TO INSTALL LOW AMBIENT ACCESSORY.
5. IF REQUIRED, ATTACH CRANKCASE HEATER ACCESSORY TO CC1 (L1) AND CC1 (L2).
6. COMPRESSOR MOTOR THERMALLY PROTECTED. ALL 3 PHASE MODELS ARE PROTECTED UNDER PRIMARY SINGLE PHASE CONDITIONS.
7. TRANSFORMER FACTORY WIRED AS SHOWN BELOW. CHANGE PRIMARY VOLTAGE CONNECTIONS FOR ALTERNATE VOLTAGES, IF REQUIRED.

UNIT VOLTAGES - HZ	TRANSFORMER TERM.
200-220 - 50HZ	200
208 - 60HZ	230
230 - 60HZ	230
380 - 60HZ	400
380-415 - 50HZ	400
460 - 60HZ	460
575 - 60HZ	230

8. LOW VOLTAGE CIRCUIT IS N.E.C. CLASS 2 WITH A CLASS 2 TRANSFORMER, 24VAC, 50/60 HZ SUPPLIED.
9. MOTOR FACTORY WIRED FOR CORRECT VOLTAGE.
10. REMOVE PL36 FOR ECONOMIZER ACCESSORY. PL34 AND PL36 LOCATED IN RETURN AIR SECTION.

COMPONENT CODES

BC	BLOWER CONTACTOR
CA	COMFORT ALERT MODULE
CC	COMPRESSOR CONTACTOR
CCH	CRANKCASE HEATER
CDS	CLOGGED DRAIN SENSOR
CFS	CLOGGED FILTER SWITCH
COMP	COMPRESSOR
CT	CONTROL TRANSFORMER
DAT	DISCHARGE AIR SENSOR
DISC	DISCONNECT SWITCH
FLMS	FLAME SENSOR
FP	FAN PROVING
FS	FREEZE SENSOR
GFCO	GROUND FAULT CONVENIENCE OUTLET
GL	GROUND LUG
GND	GROUND
HPC	HIGH PRESSURE CONTROL
IBM	INDOOR BLOWER MOTOR
IDM	INDUCED DRAFT MOTOR
IFC	INTEGRATED FURNACE CONTROL
LAC	LOW AMBIENT CONTROL
LPC	LOW PRESSURE CONTROL
MAS	MIXED AIR SENSOR
MLC	MAIN LIMIT CONTROL
MRLC	MANUAL RESET LIMIT CONTROL
NPC	NEGATIVE PRESSURE SWITCH
OAT	OUTSIDE AIR SENSOR
OFM	OUTDOOR FAN MOTOR
PL	PLUG
PT	POWER TRANSFORMER
RAT	RETURN AIR SENSOR
RC	RUN CAPACITOR
RTU-C	ROOFTOP UNIT CONTROL
SE	SPARK ELECTRODE
US	UNLOADER SOLENOID

WIRE COLOR CODE

BK.....BLACK	G.....GREEN	PR.....PURPLE
BR.....BROWN	GY.....GRAY	R.....RED
BL.....BLUE	O.....ORANGE	W .....WHITE
		Y .....YELLOW

ELECTRICAL WIRING SCHEMATIC

GE NON DDC 2-STG 150
208/230/380/460V 3PH 60 Hz.
GE NON DDC 2-STG 120
380-415V 3PH 50 Hz

APPROVED:	CHECKED:	ORIGINAL RELEASE NO.:
MODELED BY: JHB	DATE: 3-19-2018	R-1071S208
PART NO.: 90-106178-07		REV: 00

FIGURE 35

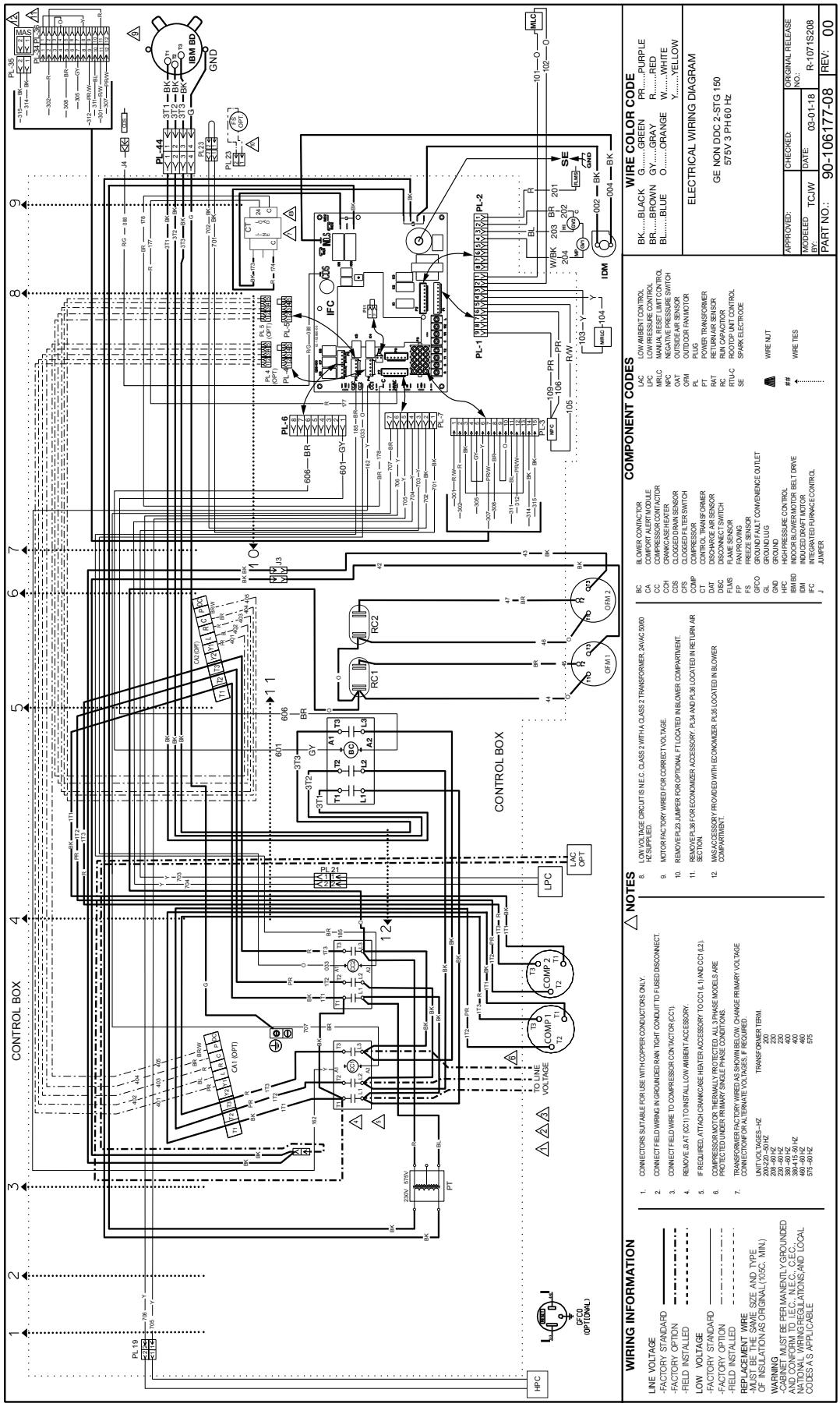
CONTROL BOX
CONTROL BOX
WIRE COLOR CODE
BK....BLACK G.....GREEN PR....PURPLE
BR....BROWN GY....GRAY R.....RED
BL.....BLUE O.....ORANGE W.....WHITE
Y.....YELLOW
ELECTRICAL WIRING DIAGRAM
GE NON DDC 2-STG 150
575V 3 PH 60 Hz
COMPONENT CODES
LAC LOW AMBIENT CONTROL
LPC LOW PRESSURE CONTROL
LAR-LC MANUAL RESET LAR CONTROL
HPC-C HIGH PRESSURE SWITCH
OAT OUTSIDE AIR SENSOR
OFM OUTDOOR FAN MOTOR
PL PLUG
PT POWER TRANSFORMER
RAT RETURN AIR SENSOR
RC RUN CAPACITOR
RTU-C ROOFTOP UNIT CONTROL
SE SPARK ELECTRODE
WIRE NUT
WIRE TIES
BC BLOWER CONTACTOR
CA COMPONENT AUTOMATION
CC COMPRESSOR CONTACTOR
CCH CRANKCASE HEATER
CDS CLOGGED DRAIN SENSOR
CFS CLOGGED FILTER SWITCH
COMP COMPRESSOR
CPT CONTROL TRANSFORMER
DAT DISCHARGE AIR SENSOR
DISC. DISCONNECT SWITCH
FLMS FLAME SENSOR
FP FAN PROVING
FS FREEZE SENSOR
GFCO GROUND FAULT CONVENIENCE OUTLET
GL GROUND LUG
GND GROUND
HPC HIGH PRESSURE CONTROL
IBM BD INDOOR BLOWER MOTOR BELT DRIVE
IDM INDUCED DRAFT MOTOR
IFC INTEGRATED FURNACE CONTROL
J JUMPER
NOTES
1. CONNECTORS SUITABLE FOR USE WITH COPPER CONDUCTORS ONLY.
2. CONNECT FIELD WIRING IN GROUNDED RAIN TIGHT CONDUIT TO FUSED DISCONNECT.
3. CONNECT FIELD WIRE TO COMPRESSOR CONTACTOR (CC1).
4. REMOVE J8 AT (CC1) TO INSTALL LOW AMBIENT ACCESSORY.
5. IF REQUIRED, ATTACH CRANKCASE HEATER ACCESSORY TO CC1 (L11 AND CC1 L2).
6. COMPRESSOR MOTOR THERMALLY PROTECTED. ALL 3 PHASE MODELS ARE PROTECTED UNDER PRIMARY SINGLE PHASE CONDITIONS.
7. TRANSFORMER FACTORY WIRED AS SHOWN BELOW. CHANGE PRIMARY VOLTAGE CONNECTIONS AS ALTERNATE VOLTAGES ARE REQUIRED.
UNIT VOLTAGES--HZ TRANSFORMER TERM.
200-230-60 HZ 200
208-60 HZ 208
220-60 HZ 220
230-60 HZ 230
380-415-50 HZ 400
460-60 HZ 460
575-60 HZ 575
8. LOW VOLTAGE CIRCUIT IS N.E.C. CLASS 2 WITH A CLASS 2 TRANSFORMER, 24VAC 50/60 HZ SUPPLIED.
9. MOTOR FACTORY WIRED FOR CORRECT VOLTAGE.
10. REMOVE PL23 JUMPER FOR OPTIONAL FT LOCATED IN BLOWER COMPARTMENT.
11. REMOVE PL36 FOR ECONOMIZER ACCESSORY. PL34 AND PL36 LOCATED IN RETURN AIR SECTION.
12. MAS ACCESSORY PROVIDED WITH ECONOMIZER. PL35 LOCATED IN BLOWER COMPARTMENT.
WIRING INFORMATION
LINE VOLTAGE
-FACTORY STANDARD
-FACTORY OPTION
-FIELD INSTALLED
LOW VOLTAGE
-FACTORY STANDARD
-FACTORY OPTION
-FIELD INSTALLED
REPLACEMENT WIRE
-MUST BE THE SAME SIZE AND TYPE OF INSULATION AS ORIGINAL (105C. MIN.)
WARNING
-CABINET MUST BE PERMANENTLY GROUNDED AND CONFORM TO I.E.C., N.E.C., C.E.C., NATIONAL AND LOCAL REGULATIONS AND LOCAL CODES AS APPLICABLE
APPROVED:
CHECKED:
ORIGINAL RELEASE NO.:
MODELED BY: TCJW
DATE: 03-01-18
R-1071S208
PART NO.: 90-106177-08
REV: 00

FIGURE 36

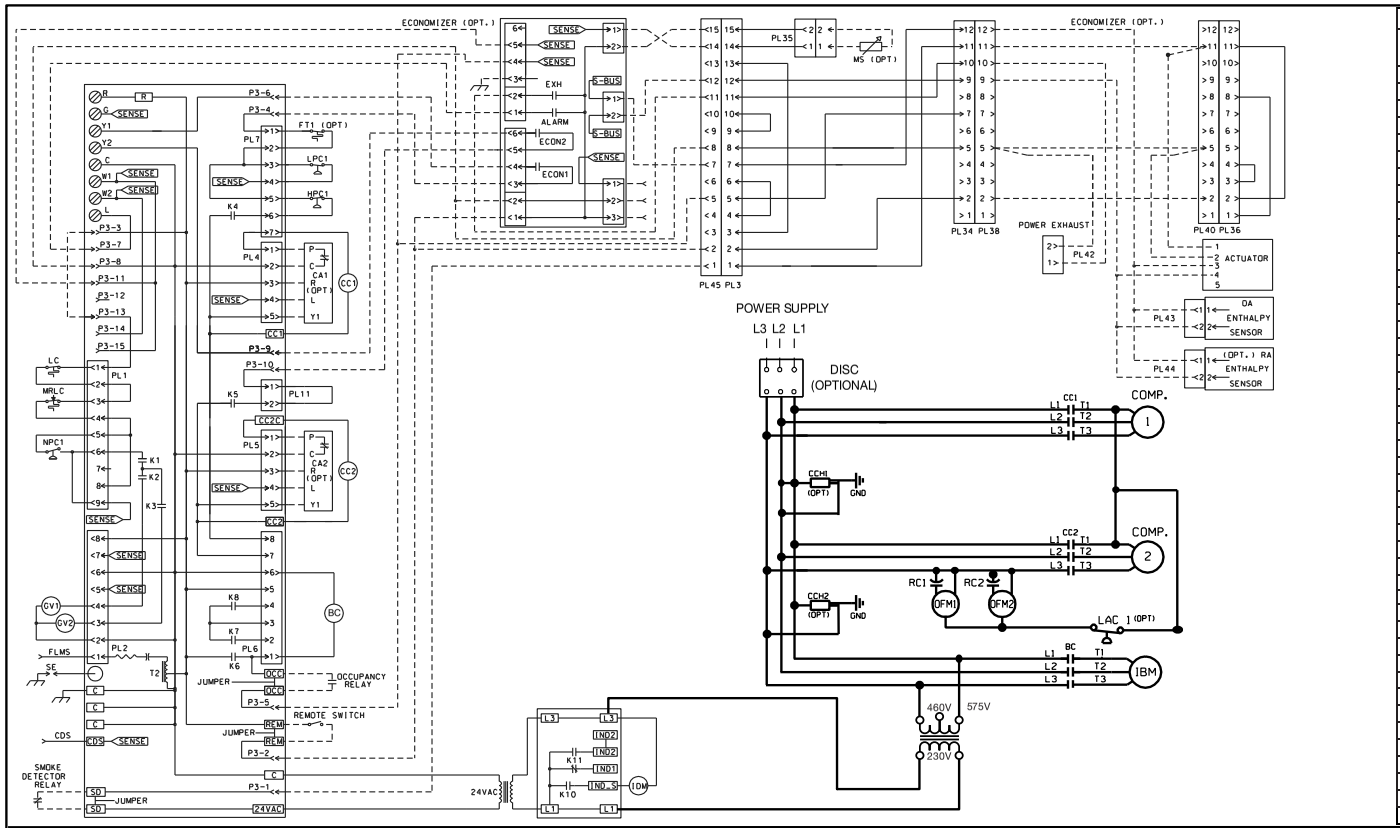

ALARM CODES

CODE	Description	FAULT LEVEL – 0,1,2,3*
0	STANDBY	0
c	COMPRESSOR ON – Low (Flashing if in time delay)	0
C	COMPRESSOR ON – High (Flashing if in time delay)	0
E	Economizer Cooling – No Compressor	0
F	CONTINUOUS FAN	0
h	HEAT ON – Low Stage	0
H	GAS HEAT ON – High Stage	0
4	Comfort Alert Code 4 for Compressor Circuit 1	3
5	Comfort Alert Code 5 for Compressor Circuit 1	3
6	Comfort Alert Code 6 for Compressor Circuit 1	3
7	Comfort Alert Code 7 for Compressor Circuit 1	3
8	Comfort Alert Code 8 for Compressor Circuit 1	3
9	Comfort Alert Code 9 for Compressor Circuit 1	3
11	FAILED IGNITION	2
12	LO FLAME SENSE	1
13	FLAME LOST	2
14	UNEXPECTED FLAME	3
15	2nd Stage Gas valve improper voltage	2
20	REFRIGERANT LOW PRESSURE SWITCH OPEN – CIRCUIT 1	2
21	REFRIGERANT LOW PRESSURE SWITCH OPEN – CIRCUIT 2	2
22	MAIN LIMIT OPEN	2
29	REFRIGERANT HIGH PRESSURE SWITCH OPEN – CIRCUIT 1	2
30	REFRIGERANT HIGH PRESSURE SWITCH OPEN – CIRCUIT 2	2
33	MRLC (Rollout Limit) OPEN	2
34	Comfort Alert Code 4 for Compressor Circuit 2	3
35	Comfort Alert Code 5 for Compressor Circuit 2	3
36	Comfort Alert Code 6 for Compressor Circuit 2	3
37	Comfort Alert Code 7 for Compressor Circuit 2	3
38	Comfort Alert Code 8 for Compressor Circuit 2	3
39	Comfort Alert Code 9 for Compressor Circuit 2	3
42	Invalid Thermostat Selection	1
44	1st Stage COMBUSTION PRESS SWITCH CLOSED	2
46	1st Stage COMBUSTION PRESS SWITCH OPEN	2
49	FREEZE SWITCH OPEN – CIRCUIT 1	2
50	FREEZE SWITCH OPEN -CIRCUIT 2	2
55	2nd Stage COMBUSTION PRESS SWITCH CLOSED	2
57	2nd Stage COMBUSTION PRESS SWITCH OPEN	2,3
59	Condensate Drain Plugged	3
61	Blower Fault – NO RUN	3
83	Condenser Coil Temp Sensor Fail-OCT	2
84	Outdoor Air Temperature Sensor Fail-OAT	2
88	Emergency Stop Fault	3
93	CONTROL Fault	3
97	Smoke Detection	3

*Fault levels: 0 = none, 1=warning, 2= problem, 3=shutdown

WIRING INFORMATION

LINE VOLTAGE
- FACTORY STANDARD
- FACTORY OPTION
- FIELD INST ALLED

LOW VOLTAGE
- FACTORY STANDARD
- FACTORY OPTION
- FIELD INST ALLED

REPLACEMENT WIRE
-MUST BE THE SAME SIZE AND TYPE OF INSULATION AS ORIG INAL (105°C MIN.)

WARNING
-CABINET MUST BE PERMANENTLY GROUNDED AND CONFORM TO I.E.C., N.E.C., C.E.C., NATIONAL WIRING REGULATIONS, AND LOCAL CODES AS APPLICABLE.

NOTES

1. CONNECTORS SUITABLE FOR USE WITH COPPER CONDUCTORS ONLY.
2. CONNECT FIELD WIRING IN GROUNDED RAIN TIGHT CONDUIT TO FUSED DISCONNECT.
3. CONNECT FIELD WIRE TO COMPRESSOR CONTACTOR (CC1).
4. REMOVE J3 AT (CC1) TO INSTALL LOW AMBIENT ACCESSORY.
5. IF REQUIRED, ATTACH CRANKCASE HEATER ACCESSORY TO CC1 (L1) AND CC1 (L2).
6. COMPRESSOR MOTOR THERMALLY PROTECTED. ALL 3 PHASE MODELS ARE PROTECTED UNDER PRIMARY SINGLE PHASE CONDITIONS.
7. TRANSFORMER FACTORY WIRED AS SHOWN BELOW. CHANGE PRIMARY VOLTAGE CONNECTIONS FOR ALTERNATE VOLTAGES, IF REQUIRED.

UNIT VOLTAGES - HZ	TRANSFORMER TERM.
200-220 - 50HZ	200
208 - 60HZ	230
230 - 60HZ	230
380 - 60HZ	400
380-415 - 50HZ	400
460 - 60HZ	460
575 - 60HZ	230

8. LOW VOLTAGE CIRCUIT IS N.E.C. CLASS 2 WITH A CLASS 2 TRANSFORMER, 24VAC 50/60 HZ SUPPLIED.
9. MOTOR FACTORY WIRED FOR CORRECT VOLTAGE.
10. REMOVE PL36 FOR ECOMOMIZER ACCESSORY. PL34 AND PL36 LOCATED IN RETURN AIR SECTION.
11. CONNECT TO ECONOMIZER LOGIC MODULE.

COMPONENT CODES

BC	BLOWER CONTACTOR
CA	COMFORT ALERT MODULE
CC	COMPRESSOR CONTACTOR
CCH	CRANKCASE HEATER
CDS	CLOG DRAIN SENSOR
CFS	CLOGGED FILTER SWITCH
COMP	COMPRESSOR
CT	CONTROL TRANSFORMER
DAT	DISCHARGE AIR ESENSOR
DISC	DISCONNECT SWITCH
ELM	ECONOMIZER LOGIC MODULE
FLMS	FLAME SENSOR
FP	FAN PROVING
FS	FREEZE SENSOR
FT	FREEZE STAT
GFCO	GROUND FAULT CONVENIENCE OUTLET
GL	GROUND LUG
GND	GROUND
HPC	HIGH PRESSURE CONTROL
IBM	INDOOR BLOWER MOTOR
IDM	INDUCED DRAFT MOTOR
IFC	INTEGRATED FURNACE CONTROL
LAC	LOW AMBIENT CONTROL
LPC	LOW PRESSURE CONTROL
MRLC	MANUAL RESET LIMIT CONTROL
NPC	NEGATIVE PRESSURE SWITCH
OAT	OUTSIDE AIR SENSOR
OFM	OUTDOOR FAN MOTOR
PL	PLUG
PT	POWER TRANSFORMER
RAT	RETURN AIR SENSOR
RC	RUN CAPACITOR
RTU-C	ROOFTOP UNIT CONTROL
SE	SPARK ELECTRODE
TB	TERMINAL BLOCK
US	UNLOADER SOLENOID

WIRE COLOR CODE

BK.....BLACK	G.....GREEN	P.R.....PURPLE
BR.....BROWN	GY.....GRAY	R.....RED
BL.....BLUE	O.....ORANGE	W .....WHITE
		Y.....YELLOW

ELECTRICAL WIRING SCHEMATIC

GE NON DDC 2-STG 150
575V 3PH 60Hz

APPROVED:	CHECKED:	ORIGINAL RELEASE NO.:
MODELED BY: JHB	DATE: 3/19/2018	R-1071S208
PART NO.: 90-106178-08		REV: 00

FIGURE 37

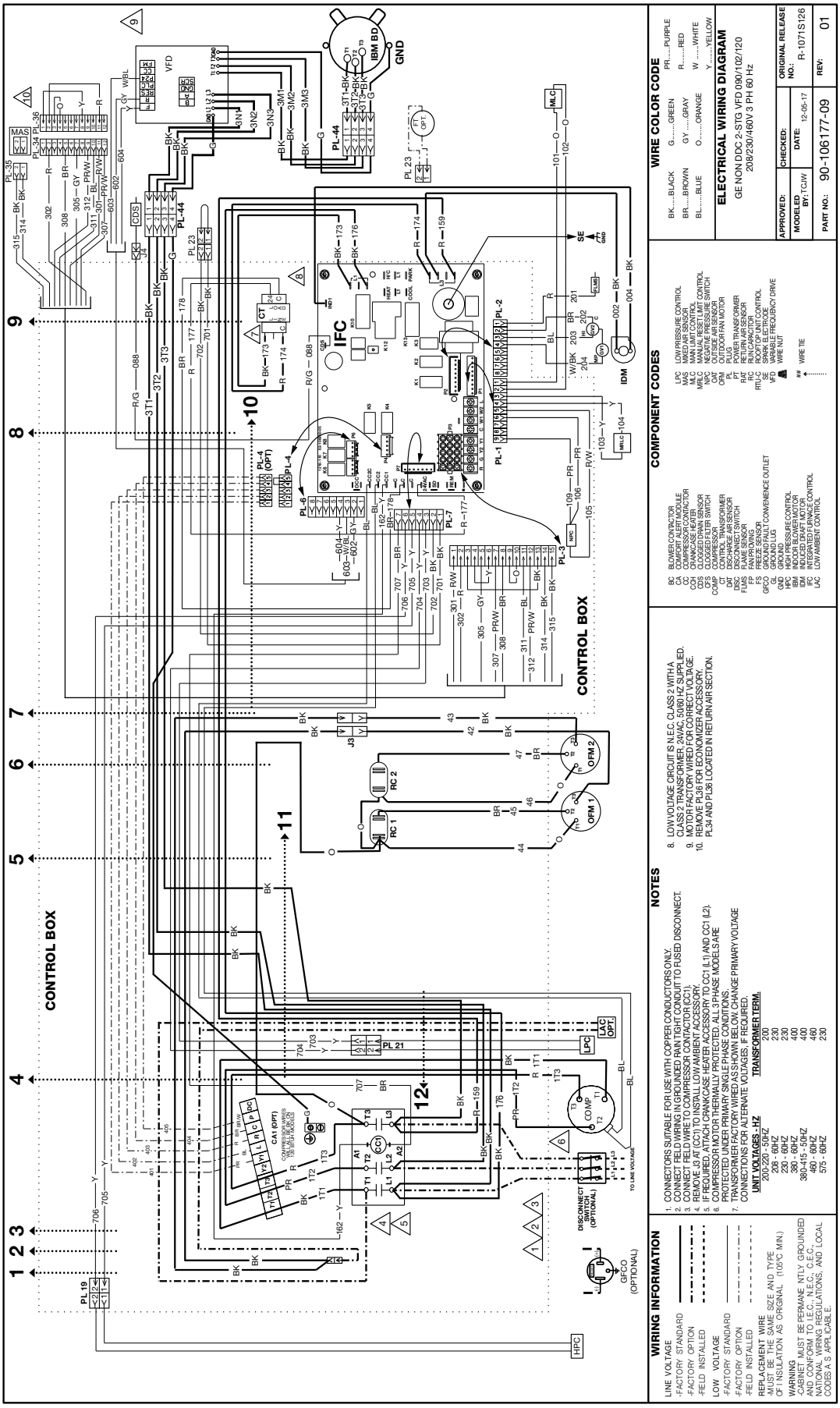
CONTROL BOX
WIRE COLOR CODE
BK.....BLACK
BR.....BROWN
BL.....BLUE
G.....GREEN
GY.....GRAY
O.....ORANGE
PR.....PURPLE
R.....RED
W.....WHITE
Y.....YELLOW
ELECTRICAL WIRING DIAGRAM
GE NON DDC 2-STG VFD 090/102/120
208/230/460V 3 PH 60 Hz
COMPONENT CODES
BC BLOWER CONTACTOR
CB CIRCUIT BREAKER MODULE
CC COMPRESSOR CONTACTOR
CCH CRANKCASE HEATER
CDS CLOGGED DRAIN SENSOR
CFS CLOGGED FILTER SWITCH
COMP COMPRESSOR
CT CONTROL TRANSFORMER
DAT DISCHARGE AIR SENSOR
DSC DISCONNECT SWITCH
FLAS FLASHER
FP FAN PROVING
FS FREEZE SENSOR
GFCO GROUND FAULT CONVENIENCE OUTLET
GL GROUND LUG
GND GROUND
HPC HIGH PRESS.RECONTROL
IBM INDOOR BLOWER MOTOR
IDM INDUCED DRAFT MOTOR
IFC INTERNAL FACTORY CONTROL
LAC LOW AMBIENT CONTROL
LPC LOW PRESSURE CONTROL
MAS MIXED AIR SENSOR
MALC MAN LIMIT CONTROL
MRLC MANUAL RESET LIMIT CONTROL
NPC NEGATIVE PRESSURE SWITCH
OAT OUTSIDE AIR SENSOR
OFM OUTDOOR FAN MOTOR
PL PLUG
PT POWER TRANSFORMER
RAT RETURN AIR SENSOR
RC RUN CAPACITOR
RTU-C ROOFTOP UNIT CONTROL
SE SINGLE ELECTRODE
VFD VARIABLE FREQUENCY DRIVE
WIRE NUT
WIRE TIE
NOTES
1. CONNECTORS SUITABLE FOR USE WITH COPPER CONDUCTORS ONLY.
2. CONNECT FIELD WIRING IN GROUNDED RAIN TIGHT CONDUIT TO FUSED DISCONNECT.
3. CONNECT FIELD WIRE TO COMPRESSOR CONTACTOR (CC1).
4. REMOVE J8 AT (CC1) TO INSTALL LOW AMBIENT ACCESSORY.
5. IF REQUIRED, ATTACH CRANKCASE HEATER ACCESSORY TO CC1 (L1) AND CC1 (L2).
6. COMPRESSOR MOTOR THERMALLY PROTECTED. ALL 3 PHASE MODELS ARE PROTECTED UNDER PRIMARY SINGLE PHASE CONDITIONS.
7. TRANSFORMER FACTORY WIRED AS SHOWN BELOW. CHANGE PRIMARY VOLTAGE CONNECTIONS FOR ALTERNATE VOLTAGES. RE-INSULATED.
UNIT VOLTAGE - HZ / TRANSFORMER TERM.
200-220-240-50HZ 200
208 - 60HZ 230
230 - 60HZ 230
380 - 60HZ 400
380-415 - 50HZ 400
460 - 60HZ 460
575 - 60HZ 230
8. LOW VOLTAGE CIRCUIT IS N.E.C. CLASS 2 WITH A CLASS 2 TRANSFORMER. 24VAC, 50/60 HZ SUPPLIED.
9. MOTOR TO OPERATE ON PROPERLY GROUNDED VOLTAGE.
10. REMOVE PL36 FOR ECONOMIZER ACCESSORY. PL34 AND PL36 LOCATED IN RETURN AIR SECTION.
WIRING INFORMATION
LINE VOLTAGE
FACTORY STANDARD
FACTORY OPTION
FIELD INSTALLED
LOW VOLTAGE
FACTORY STANDARD
FACTORY OPTION
FIELD INSTALLED
REPLACEMENT WIRE
MUST BE THE SAME SIZE AND TYPE OF INSULATION AS ORIGINAL (105°C MIN.)
WARNING
CABINET MUST BE PERMANENTLY GROUNDED AND CONFORM TO E.S.A. C.E.C. N.E.C. AND NATIONAL WIRING REGULATIONS, AND LOCAL CODES A S APPLICABLE.
APPROVED:
MODELED BY: TCJW
CHECKED:
DATE: 12-05-17
ORIGINAL RELEASE NO.: R-1071S126
PART NO.: 90-106177-09
REV: 01
CONTROL BOX
IFC
IBM BD
GND
VFD
IDM
COMP
OFM 1
OFM 2
RC 1
RC 2
DISCONNECT SWITCH (OPTIONAL)
GFCO (OPTIONAL)
TO LINE VOLTAGE
HPC
LPC
LAC OPT
CAT (OPT)
COMPRESSOR WIRES 90-101-1-2-3-4-5-6
PL 19
PL 21
PL 23
PL 34
PL 35
PL 36
PL-1
PL-2
PL-3
PL-4
PL-6
PL-7
PL-44
MAS
MALC
MRLC
NPC
CDS
CT
OPT
SE
GND

FIGURE 38

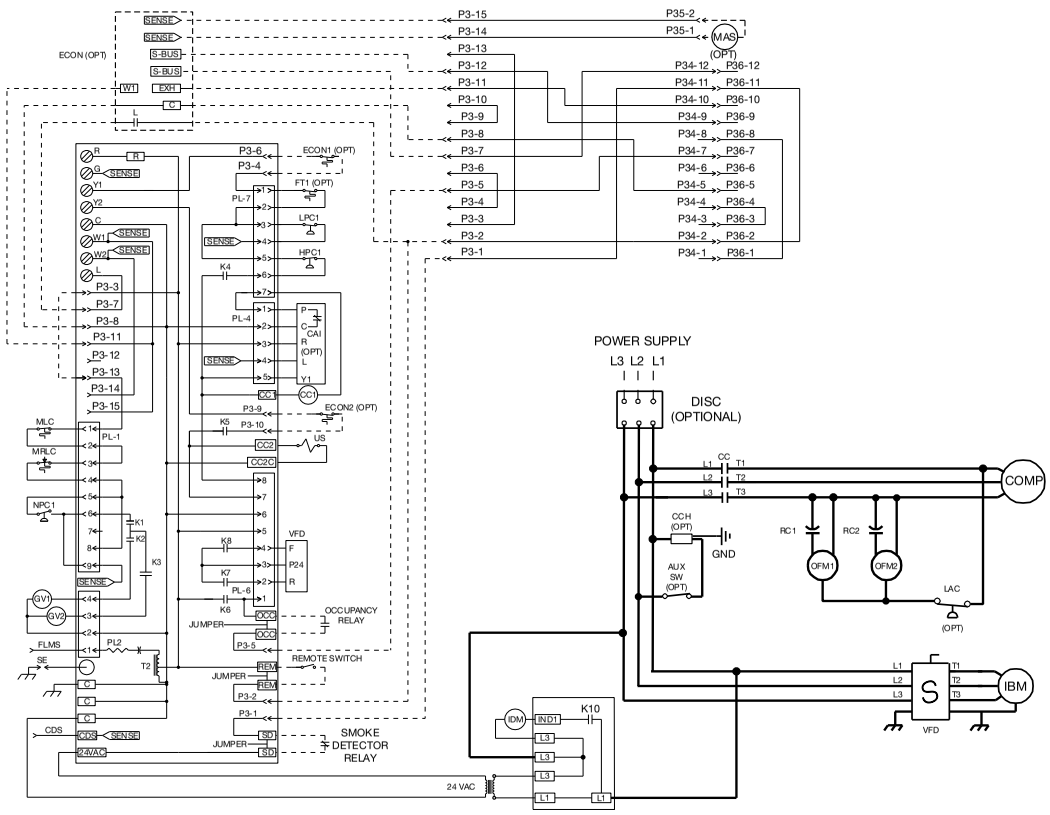

ALARM CODES

CODE	Description	FAULT LEVEL – 0, 1, 2, 3*
0	STANDBY	0
c	COMPRESSOR ON – Low (Flashing if in time delay)	0
C	COMPRESSOR ON – High (Flashing if in time delay)	0
E	Economizer Cooling – No Compressor	0
F	CONTINUOUS FAN	0
h	HEAT ON – Low Stage	0
H	GAS HEAT ON – High Stage	0
4	Comfort Alert Code 4 for Compressor Circuit 1	3
5	Comfort Alert Code 5 for Compressor Circuit 1	3
6	Comfort Alert Code 6 for Compressor Circuit 1	3
7	Comfort Alert Code 7 for Compressor Circuit 1	3
8	Comfort Alert Code 8 for Compressor Circuit 1	3
9	Comfort Alert Code 9 for Compressor Circuit 1	3
11	FAILED IGNITION	2
12	LO FLAME SENSE	1
13	FLAME LOST	2
14	UNEXPECTED FLAME	3
15	2nd Stage Gas valve improper voltage	2
20	REFRIGERANT LOW PRESSURE SWITCH OPEN – CIRCUIT 1	2
21	REFRIGERANT LOW PRESSURE SWITCH OPEN – CIRCUIT 2	2
22	MAIN LIMIT OPEN	2
29	REFRIGERANT HIGH PRESSURE SWITCH OPEN – CIRCUIT 1	2
30	REFRIGERANT HIGH PRESSURE SWITCH OPEN – CIRCUIT 2	2
33	MRLC (Rollout Limit) OPEN	2
34	Comfort Alert Code 4 for Compressor Circuit 2	3
35	Comfort Alert Code 5 for Compressor Circuit 2	3
36	Comfort Alert Code 6 for Compressor Circuit 2	3
37	Comfort Alert Code 7 for Compressor Circuit 2	3
38	Comfort Alert Code 8 for Compressor Circuit 2	3
39	Comfort Alert Code 9 for Compressor Circuit 2	3
42	Invalid Thermostat selection	1
44	1st Stage COMBUSTION PRESS SWITCH CLOSED	2
46	1st Stage COMBUSTION PRESS SWITCH OPEN	2
49	FREEZE SWITCH OPEN – CIRCUIT 1	2
50	FREEZE SWITCH OPEN -CIRCUIT 2	2
55	2nd Stage COMBUSTION PRESS SWITCH CLOSED	2
57	2nd Stage COMBUSTION PRESS SWITCH OPEN	2,3
59	Condensate Drain Plugged	3
61	Blower Fault – NO RUN	3
83	Condenser Coil Temp Sensor Fail-OCT	2
84	Outdoor Air Temperature Sensor Fail-OAT	2
88	Emergency Stop Fault	3
93	CONTROL Fault	3
97	Smoke Detection	3

*Fault levels:0 = none, 1=warning, 2= problem, 3=shutdown

WIRING INFORMATION

LINE VOLTAGE
-FACTORY STANDARD
-FACTORY OPTION
-FIELD INSTALLED

LOW VOLTAGE
-FACTORY STANDARD
-FACTORY OPTION
-FIELD INSTALLED

REPLACEMENT WIRE
-MUST BE THE SAME SIZE AND TYPE OF INSULATION AS ORIGINAL (105°C MIN.)

WARNING
-CABINET MUST BE PERMANENTLY GROUNDED AND CONFORM TO I.E.C., N.E.C., C.E.C., NATIONAL WIRING REGULATIONS, AND LOCAL CODES AS APPLICABLE.

NOTES

1. CONNECTORS SUITABLE FOR USE WITH COPPER CONDUCTORS ONLY.
2. CONNECT FIELD WIRING IN GROUNDED RAIN TIGHT CONDUIT TO FUSED DISCONNECT.
3. CONNECT FIELD WIRE TO COMPRESSOR CONTACTOR (CC1).
4. REMOVE J3 AT (CC1) TO INSTALL LOW AMBIENT ACCESSORY.
5. IF REQUIRED, ATTACH CRANKCASE HEATER ACCESSORY TO CC1 (L1) AND CC1 (L2).
6. COMPRESSOR MOTOR THERMALLY PROTECTED. ALL 3 PHASE MODELS ARE PROTECTED UNDER PRIMARY SINGLE PHASE CONDITIONS.
7. TRANSFORMER FACTORY WIRED AS SHOWN BELOW. CHANGE PRIMARY VOLTAGE CONNECTIONS FOR ALTERNATE VOLTAGES, IF REQUIRED.

UNIT VOLTAGES - HZ	TRANSFORMER TERM.
200-220 - 50HZ	200
208 - 60HZ	230
230 - 60HZ	230
380 - 60HZ	400
380-415 - 50HZ	400
460 - 60HZ	460
575 - 60HZ	230

8. LOW VOLTAGE CIRCUIT IS N.E.C. CLASS 2 WITH A CLASS 2 TRANSFORMER, 24VAC, 50/60 HZ SUPPLIED.
9. MOTOR FACTORY WIRED FOR CORRECT VOLTAGE.
10. REMOVE PL36 FOR ECONOMIZER ACCESSORY. PL34 AND PL36 LOCATED IN RETURN AIR SECTION.

COMPONENT CODES

CA	COMFORT ALERT MODULE	LPC	LOW PRESSURE CONTROL
CC	COMPRESSOR CONTACTOR	MAS	MIXED AIR SENSOR
CCH	CRANKCASE HEATER	MLC	MAIN LIMIT CONTROL
CDS	CLOGGED DRAIN SENSOR	MRLC	MANUAL RESET LIMIT CONTROL
CFS	CLOGGED FILTER SWITCH	NPC	NEGATIVE PRESSURE SWITCH
COMP	COMPRESSOR	OAT	OUTSIDE AIR SENSOR
CT	CONTROL TRANSFORMER	OFM	OUTDOOR FAN MOTOR
DAT	DISCHARGE AIR SENSOR	PL	PLUG
DISC	DISCONNECT SWITCH	PT	POWER TRANSFORMER
FLMS	FLAME SENSOR	RAT	RETURN AIR SENSOR
FP	FAN PROVING	RC	RUN CAPACITOR
FS	FREEZE SENSOR	RTU-C	ROOFTOP UNIT CONTROL
GFCO	GROUND FAULT CONVENIENCE OUTLET	SE	SPARK ELECTRODE
GL	GROUND LUG	US	UNLOADER SOLENOID
GND	GROUND	VFD	VARIABLE FREQUENCY DRIVE
HPC	HIGH PRESSURE CONTROL		
IBM	INDOOR BLOWER MOTOR		
IDM	INDUCED DRAFT MOTOR		
IFC	INTEGRATED FURNACE CONTROL		
LAC	LOW AMBIENT CONTROL		

WIRE COLOR CODE

BK.....BLACK	G.....GREEN	PR.....PURPLE
BR.....BROWN	GY.....GRAY	R.....RED
BL.....BLUE	O.....ORANGE	W .....WHITE
		Y .....YELLOW

ELECTRICAL WIRING SCHEMATIC

GE NON DDC 2-STG VFD 090/102/120
208/230/460V 3 PH 60 Hz

APPROVED:	CHECKED:	ORIGINAL RELEASE NO.:
MODELED BY: TEW	DATE: 12-06-17	R-1071S126
PART NO.: 90-106178-09		REV: 02

FIGURE 39

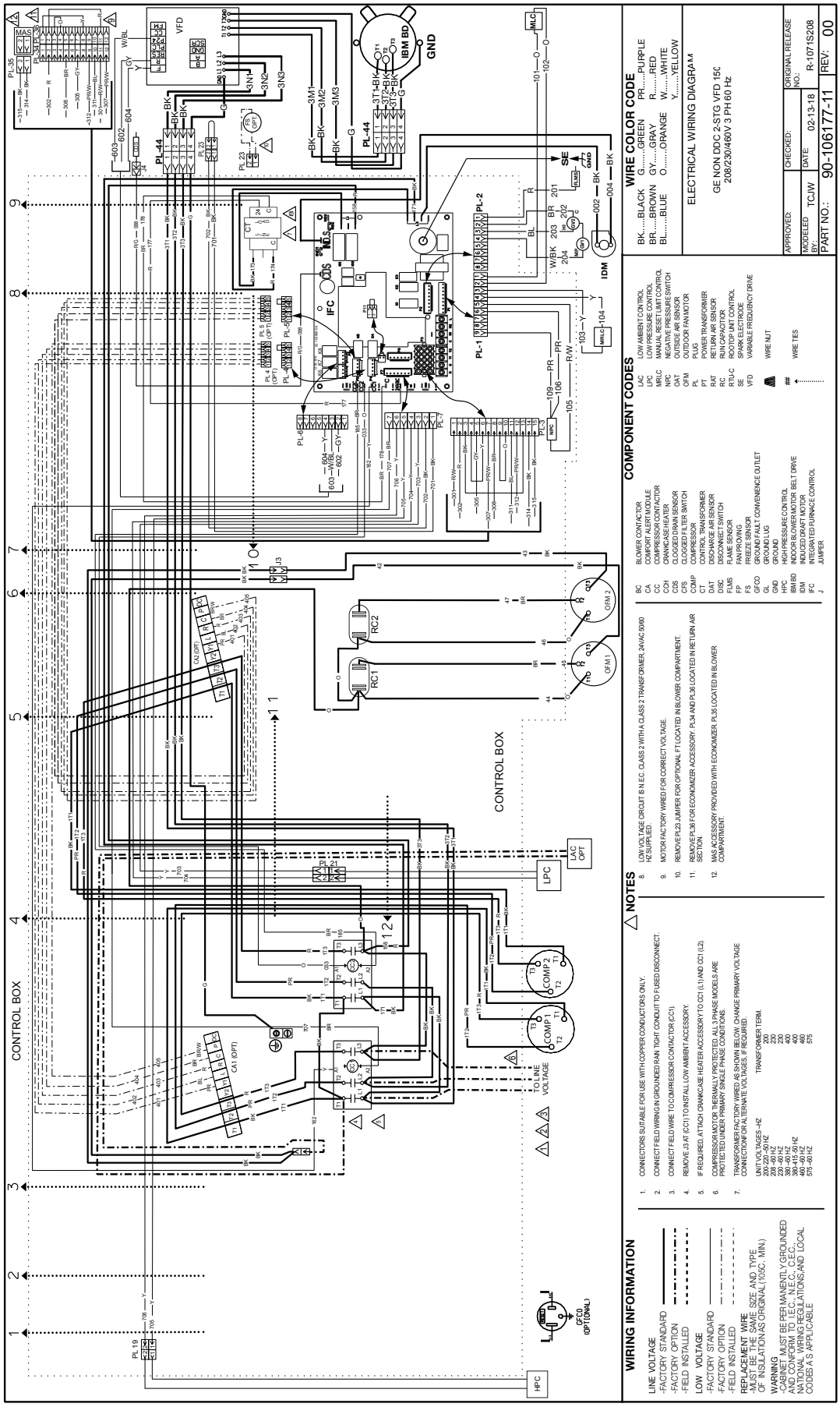
CONTROL BOX
CONTROL BOX
WIRING INFORMATION
LINE VOLTAGE
-FACTORY STANDARD
-FACTORY OPTION
-FIELD INSTALLED
LOW VOLTAGE
-FACTORY STANDARD
-FACTORY OPTION
-FIELD INSTALLED
REPLACEMENT WIRE
-MUST BE THE SAME SIZE AND TYPE OF INSULATION AS ORIGINAL (105C. MIN.)
WARNING
-CABINET MUST BE PERMANENTLY GROUNDED AND CONFORM TO I.E.C., N.E.C., C.E.C., NATIONAL AND LOCAL REGULATIONS, AND LOCAL CODES AS APPLICABLE
NOTES
1. CONNECTORS SUITABLE FOR USE WITH COPPER CONDUCTORS ONLY.
2. CONNECT FIELD WIRING IN GROUNDED RAIN TIGHT CONDUIT TO FUSED DISCONNECT.
3. CONNECT FIELD WIRE TO COMPRESSOR CONTACTOR (CC1).
4. REMOVE J3 AT (CC1) TO INSTALL LOW AMBIENT ACCESSORY.
5. IF REQUIRED, ATTACH CRANKCASE HEATER ACCESSORY TO CC1 (L1) AND CC1 (L2).
6. COMPRESSOR MOTOR THERMALLY PROTECTED. ALL 3 PHASE MODELS ARE PROVIDED WITH PHASE SENSOR CIRCUIT BOARD.
7. TRANSFORMER FACTORY WIRED AS SHOWN BELOW. CHANGE PRIMARY VOLTAGE CONNECTIONS FOR ALTERNATE VOLTAGES, IF REQUIRED.
UNIT VOLTAGES –HZ TRANSFORMER TERM.
200/230-60 HZ 200
208-60 HZ 208
220-60 HZ 220
230-60 HZ 230
380-415-50 HZ 400
460-60 HZ 460
575-60 HZ 575
8. LOW VOLTAGE CIRCUIT IS N.E.C. CLASS 2 WITH A CLASS 2 TRANSFORMER, 24VAC 50/60 HZ SUPPLIED.
9. MOTOR FACTORY WIRED FOR CORRECT VOLTAGE.
10. REMOVE PL23 JUMPER FOR OPTIONAL FT LOCATED IN BLOWER COMPARTMENT.
11. REMOVE PL36 FOR ECONOMIZER ACCESSORY. PL34 AND PL36 LOCATED IN RETURN AIR SECTION.
12. MAS ACCESSORY PROVIDED WITH ECONOMIZER. PL35 LOCATED IN BLOWER COMPARTMENT.
COMPONENT CODES
BC: BLOWER CONTACTOR
CA: CONVERT LEAD TO CABLE
CC: COMPRESSOR CONTACTOR
CCH: CRANKCASE HEATER
CDS: CLOGGED DRAIN SENSOR
CFS: CLOGGED FILTER SWITCH
COMP: COMPRESSOR
CT: CONTROL TRANSFORMER
DA: DISCHARGE AIR SENSOR
DIT: DISCONNECT SWITCH
DISC: FLAME SENSOR
FLMS: FAN PROVING
FP: FREEZE SENSOR
FS: GROUND FAULT CONVENIENCE OUTLET
GFCO: GROUND LUG
GL: GROUND
GND: HIGH PRESSURE CONTROL
HPC: INDOOR BLOWER MOTOR BELT DRIVE
IBM BD: INDUCED DRAFT MOTOR
IDM: INTEGRATED IGNITION CONTROL
IFC: JUMPER
J: LOW AMBIENT CONTROL
LAC: LOW PRESSURE CONTROL
LPC: MANUAL LIQUID LINE SOLENOID CONTROL
MLC: NEGATIVE PRESSURE SWITCH
NPS: OUTSIDE AIR SENSOR
OAT: OUTDOOR FAN MOTOR
OFM: PLUG
PL: POWER TRANSFORMER
PT: RETURN AIR SENSOR
RAT: RUN CAPACITOR
RC: ROOFTOP UNIT CONTROL
RTU-C: SPARK ELECTRODE
SE: VARIABLE FREQUENCY DRIVE
VFD: WIRE NUT
WIRE TIES
WIRE COLOR CODE
BK.....BLACK G.....GREEN PR.....PURPLE
BR.....BROWN GY.....GRAY R.....RED
BL.....BLUE O.....ORANGE W.....WHITE
Y.....YELLOW
ELECTRICAL WIRING DIAGRAM
GE NON DDC 2-STG VFD 15C
208/230/460V 3 PH 60 Hz
APPROVED:
CHECKED:
ORIGINAL RELEASE NO.: R-1071S208
MODELED BY: TCJW
DATE: 02-13-18
PART NO.: 90-106177-11
REV: 00

FIGURE 40

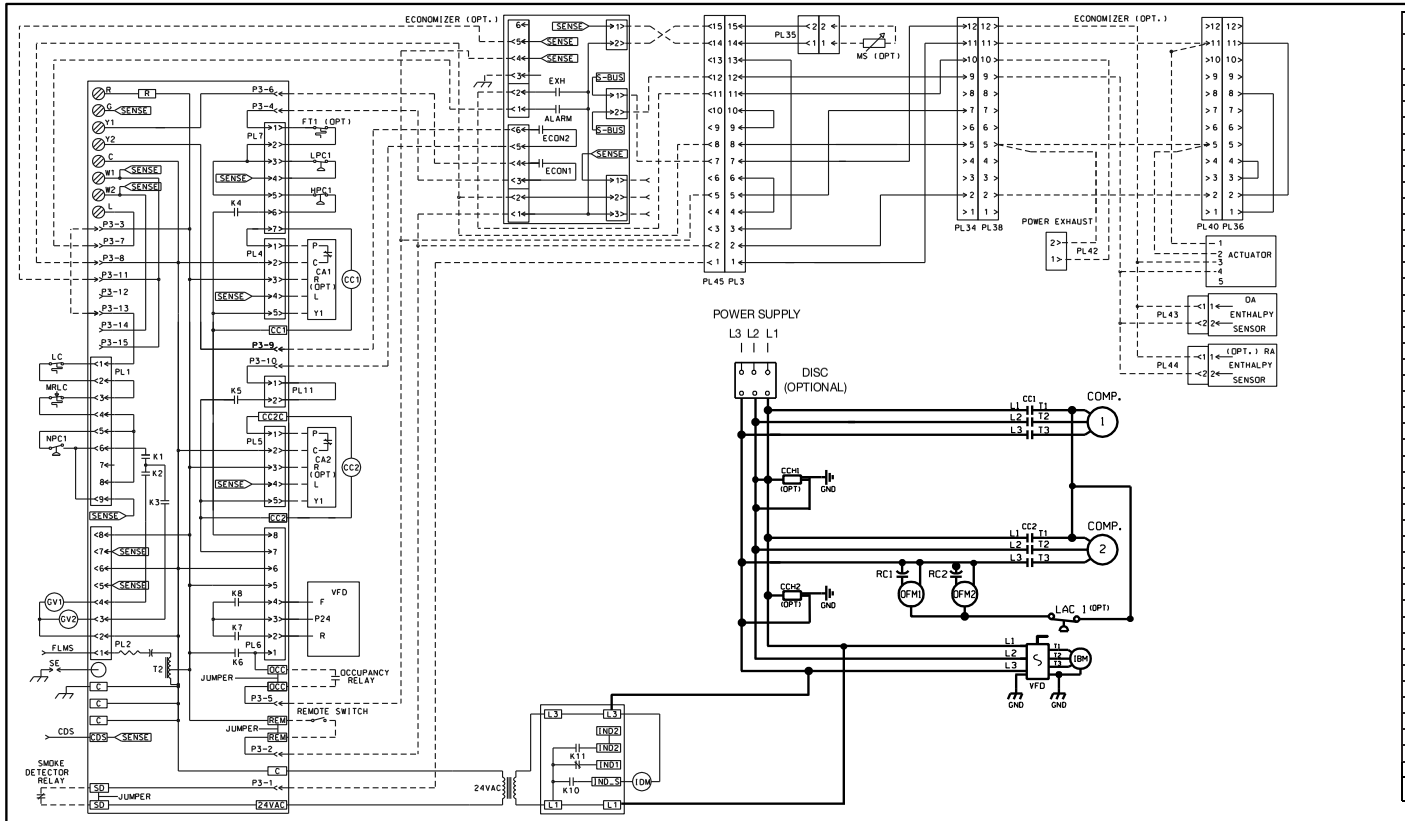

ALARM CODES

CODE	Description	FAULT LEVEL – 0,1,2,3*
0	STANDBY	0
c	COMPRESSOR ON – Low (Flashing if in time delay)	0
C	COMPRESSOR ON – High (Flashing if in time delay)	0
E	Economizer Cooling – No Compressor	0
F	CONTINUOUS FAN	0
h	HEAT ON – Low Stage	0
H	GAS HEAT ON – High Stage	0
4	Comfort Alert Code 4 for Compressor Circuit 1	3
5	Comfort Alert Code 5 for Compressor Circuit 1	3
6	Comfort Alert Code 6 for Compressor Circuit 1	3
7	Comfort Alert Code 7 for Compressor Circuit 1	3
8	Comfort Alert Code 8 for Compressor Circuit 1	3
9	Comfort Alert Code 9 for Compressor Circuit 1	3
11	FAILED IGNITION	2
12	LO FLAME SENSE	1
13	FLAME LOST	2
14	UNEXPECTED FLAME	3
15	2nd Stage Gas valve improper voltage	2
20	REFRIGERANT LOW PRESSURE SWITCH OPEN – CIRCUIT 1	2
21	REFRIGERANT LOW PRESSURE SWITCH OPEN – CIRCUIT 2	2
22	MAIN LIMIT OPEN	2
29	REFRIGERANT HIGH PRESSURE SWITCH OPEN – CIRCUIT 1	2
30	REFRIGERANT HIGH PRESSURE SWITCH OPEN – CIRCUIT 2	2
33	MRLC (Rollout Limit) OPEN	2
34	Comfort Alert Code 4 for Compressor Circuit 2	3
35	Comfort Alert Code 5 for Compressor Circuit 2	3
36	Comfort Alert Code 6 for Compressor Circuit 2	3
37	Comfort Alert Code 7 for Compressor Circuit 2	3
38	Comfort Alert Code 8 for Compressor Circuit 2	3
39	Comfort Alert Code 9 for Compressor Circuit 2	3
42	Invalid Thermostat selection	1
44	1st Stage COMBUSTION PRESS SWITCH CLOSED	2
46	1st Stage COMBUSTION PRESS SWITCH OPEN	2
49	FREEZE SWITCH OPEN – CIRCUIT 1	2
50	FREEZE SWITCH OPEN -CIRCUIT 2	2
55	2nd Stage COMBUSTION PRESS SWITCH CLOSED	2
57	2nd Stage COMBUSTION PRESS SWITCH OPEN	2,3
59	Condensate Drain Plugged	3
61	Blower Fault – NO RUN	3
83	Condenser Coil Temp Sensor Fail-OCT	2
84	Outdoor Air Temperature Sensor Fail-OAT	2
88	Emergency Stop Fault	3
93	CONTROL Fault	3
97	Smoke Detection	3

*Fault levels: 0 = none, 1=warning, 2= problem, 3=shutdown

WIRING INFORMATION

LINE VOLTAGE
- -FACTORY STANDARD
- -FACTORY OPTION
- -FIELD INSTALLED

LOW VOLTAGE
- -FACTORY STANDARD
- -FACTORY OPTION
- -FIELD INSTALLED

REPLACEMENT WIRE
-MUST BE THE SAME SIZE AND TYPE OF INSULATION AS ORIGINAL (105°C MIN.)

WARNING
-CABINET MUST BE PERMANENTLY GROUNDED AND CONFORM TO I.E.C., N.E.C., C.E.C., NATIONAL WIRING REGULATIONS, AND LOCAL CODES AS APPLICABLE.

NOTES

1. CONNECTORS SUITABLE FOR USE WITH COPPER CONDUCTORS ONLY.
2. CONNECT FIELD WIRING IN GROUNDED RAIN TIGHT CONDUIT TO FUSED DISCONNECT.
3. CONNECT FIELD WIRE TO COMPRESSOR CONTACTOR (CC1).
4. REMOVE J3 AT (CC1) TO INSTALL LOW AMBIENT ACCESSORY.
5. IF REQUIRED, ATTACH CRANKCASE HEATER ACCESSORY TO CC1 (L1) AND CC1 (L2).
6. COMPRESSOR MOTOR THERMALLY PROTECTED. ALL 3 PHASE MODELS ARE PROTECTED UNDER PRIMARY SINGLE PHASE CONDITIONS.
7. TRANSFORMER FACTORY WIRED AS SHOWN BELOW. CHANGE PRIMARY VOLTAGE CONNECTIONS FOR ALTERNATE VOLTAGES, IF REQUIRED.

UNIT VOLTAGES - HZ	TRANSFORMER TERM.
200-220 - 50HZ	200
208 - 60HZ	230
230 - 60HZ	230
380 - 60HZ	400
380-415 - 50HZ	400
460 - 60HZ	460
575 - 60HZ	230

8. LOW VOLTAGE CIRCUIT IS N.E.C. CLASS 2 WITH A CLASS 2 TRANSFORMER, 24VAC, 50/60 HZ SUPPLIED.
9. MOTOR FACTORY WIRED FOR CORRECT VOLTAGE.
10. REMOVE PL36 FOR ECONOMIZER ACCESSORY. PL34 AND PL36 LOCATED IN RETURN AIR SECTION.

COMPONENT CODES

CA	COMFORT ALERT MODULE	LPC	LOW PRESSURE CONTROL
CC	COMPRESSOR CONTACTOR	MAS	MIXED AIR SENSOR
CCH	CRANKCASE HEATER	MLC	MAIN LIMIT CONTROL
CDS	CLOGGED DRAIN SENSOR	MRLC	MANUAL RESET LIMIT CONTROL
CFS	CLOGGED FILTER SWITCH	NPC	NEGATIVE PRESSURE SWITCH
COMP	COMPRESSOR	OAT	OUTSIDE AIR SENSOR
CT	CONTROL TRANSFORMER	OFM	OUTDOOR FAN MOTOR
DAT	DISCHARGE AIR SENSOR	PL	PLUG
DISC	DISCONNECT SWITCH	PT	POWER TRANSFORMER
FLMS	FLAME SENSOR	RAT	RETURN AIR SENSOR
FP	FAN PROVING	RC	RUN CAPACITOR
FS	FREEZE SENSOR	RTU-C	ROOFTOP UNIT CONTROL
GFCO	GROUND FAULT CONVENIENCE OUTLET	SE	SPARK ELECTRODE
GL	GROUND LUG	US	UNLOADER SOLENOID
GND	GROUND	VFD	VARIABLE FREQUENCY DRIVE
HPC	HIGH PRESSURE CONTROL		
IBM	INDOOR BLOWER MOTOR		
IDM	INDUCED DRAFT MOTOR		
IFC	INTEGRATED FURNACE CONTROL		
LAC	LOW AMBIENT CONTROL		

WIRE COLOR CODE

BK.....BLACK	G.....GREEN	PR.....PURPLE
BR.....BROWN	GY.....GRAY	R.....RED
BL.....BLUE	O.....ORANGE	W .....WHITE
		Y.....YELLOW

ELECTRICAL WIRING SCHEMATIC

GE NON DDC 2-STG VFD 150
208/230/460V 3 PH 60 Hz

APPROVED:	CHECKED:	ORIGINAL RELEASE NO.:
MODELED BY: JHB	DATE: 3-19-18	R-1071S208
PART NO.: 90-106178-11		REV: 00

FIGURE 40

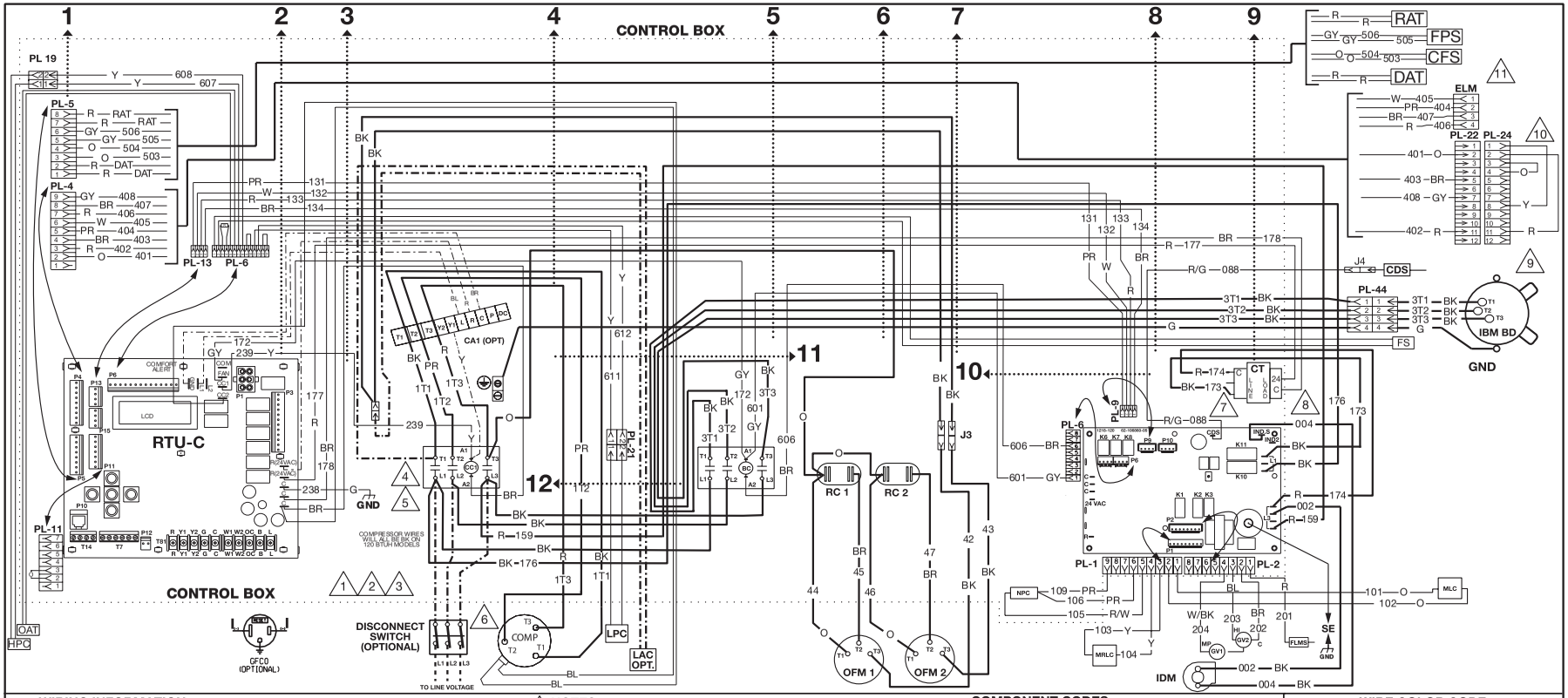

WIRING INFORMATION

LINE VOLTAGE
- -FACTORY STANDARD
- -FACTORY OPTION
- -FIELD INSTALLED

LOW VOLTAGE
- -FACTORY STANDARD
- -FACTORY OPTION
- -FIELD INSTALLED

REPLACEMENT WIRE
-MUST BE THE SAME SIZE AND TYPE OF INSULATION AS ORIGINAL (105°C.MIN.)

WARNING
-CABINET MUST BE PERMANENTLY GROUNDED AND CONFORM TO I.E.C., N.E.C., C.E.C., NATIONAL WIRING REGULATIONS, AND LOCAL CODES AS APPLICABLE.

NOTES

1. CONNECTORS SUITABLE FOR USE WITH COPPER CONDUCTORS ONLY.
2. CONNECT FIELD WIRING IN GROUNDED RAIN TIGHT CONDUIT TO FUSED DISCONNECT.
3. CONNECT FIELD WIRE TO COMPRESSOR CONTACTOR (CC1).
4. REMOVE J3 AT (CC1) TO INSTALL LOW AMBIENT ACCESSORY.
5. IF REQUIRED, ATTACH CRANKCASE HEATER ACCESSORY TO CC1 (L1) AND CC1 (L2).
6. COMPRESSOR MOTOR THERMALLY PROTECTED. ALL 3 PHASE MODELS ARE PROTECTED UNDER PRIMARY SINGLE PHASE CONDITIONS.
7. TRANSFORMER FACTORY WIRED AS SHOWN BELOW. CHANGE PRIMARY VOLTAGE CONNECTION FOR ALTERNATE VOLTAGES, IF REQUIRED.

UNIT VOLTAGES –HZ	TRANSFORMER TERM.
200-220 –50 HZ	200
208 –60 HZ	230
230 –60 HZ	230
380 –60 HZ	400
380-415 -50 HZ	400
460 –60 HZ	460
575 –60 HZ	230

8. LOW VOLTAGE CIRCUIT IS N.E.C. CLASS 2 WITH A CLASS 2 TRANSFORMER, 24VAC 50/60 HZ SUPPLIED.
9. MOTOR FACTORY WIRED FOR CORRECT VOLTAGE.
10. REMOVE PL24 FOR ECONOMIZER ACCESSORY. PL22 AND PL24 LOCATED IN RETURN AIR SECTION.
11. CONNECT TO ECONOMIZER LOGIC MODULE.

COMPONENT CODES

BC	BLOWER CONTACTOR
CA	COMFORT ALERT MODULE
CC	COMPRESSOR CONTACTOR
CCH	CRANKCASE HEATER
CDS	CLOG DRAIN SENSOR
CFS	CLOGGED FILTER SWITCH
COMP	COMPRESSOR
CT	CONTROL TRANSFORMER
DAT	DISCHARGE AIR SENSOR
DISC	DISCONNECT SWITCH
ELM	ECONOMIZER LOGIC MODULE
FLMS	FLAME SENSOR
FP	FAN PROVING SWITCH
FS	FREEZE SENSOR
FT	FREEZE STAT
GFCO	GROUND FAULT CONVENIENCE OUTLET
GL	GROUND LUG
GND	GROUND
GV	GAS VALVE
HPC	HIGH PRESSURE CONTROL
IBM	INDOOR BLOWER MOTOR
IDM	INDUCED DRAFT MOTOR
IFC	INTEGRATED FURNACE CONTROL
J	JUMPER
LAC	LOW AMBIENT CONTROL
LPC	LOW PRESSURE CONTROL
MLC	MAIN LIMIT CONTROL
MRLC	MANUAL RESET LIMIT CONTROL
NPC	NEGATIVE PRESSURE SWITCH
OAT	OUTSIDE AIR SENSOR
OFM	OUTDOOR FAN MOTOR
PL	PLUG
PT	POWER TRANSFORMER
RAT	RETURN AIR SENSOR
RC	RUN CAPACITOR
RTU-C	ROOFTOP UNIT CONTROL
SE	SPARK ELECTRODE
US	UNLOADER SOLENOID
##	WIRE TIES

WIRE COLOR CODE

BK.....BLACK	G.....GREEN	PR.....PURPLE
BR.....BROWN	GY.....GRAY	R.....RED
BL.....BLUE	O.....ORANGE	W.....WHITE
		Y.....YELLOW

ELECTRICAL WIRING DIAGRAM

GE DDC 2-STG 090/102/120
208/230/380/460V, 3PH, 60HZ

GE DDC 2-STG 072/090/102
380-415V, 3PH, 50HZ

APPROVED:	CHECKED:	ORIGINAL RELEASE NO.:
MODELED BY: TCJW	DATE: 11-13-17	R-1071S126
PART NO.: 90-106177-13		REV: 00

FIGURE 42

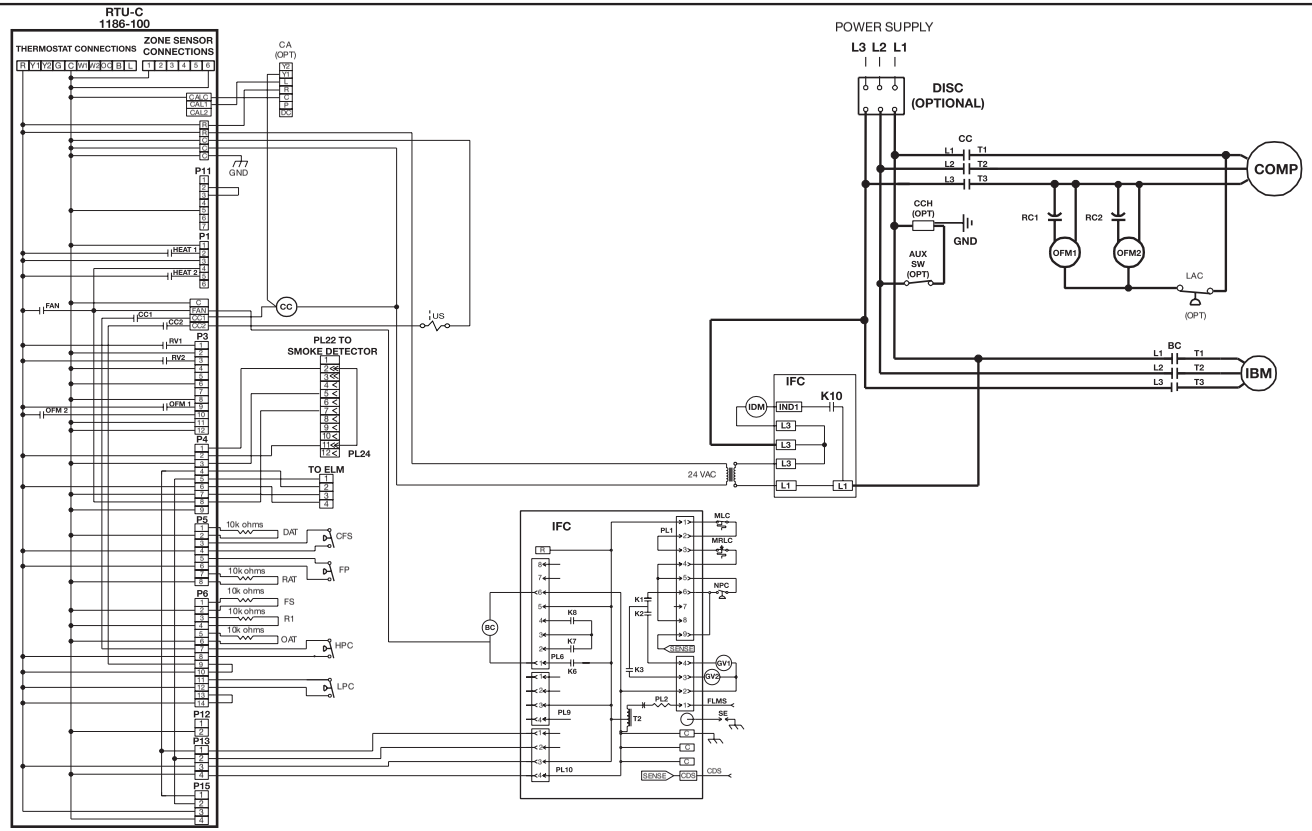

ALARM CODES

CODE	Description	FAULT LEVEL –0,1,2,3*
0	STANDBY	0
c	COMPRESSOR ON – Low (Flashing if in time delay)	0
C	COMPRESSOR ON – High (Flashing if in time delay)	0
E	Economizer Cooling – No Compressor	0
F	CONTINUOUS FAN	0
h	HEAT ON – Low Stage	0
H	GAS HEAT ON – High Stage	0
4	Comfort Alert Code 4 for Compressor Circuit 1	3
5	Comfort Alert Code 5 for Compressor Circuit 1	3
6	Comfort Alert Code 6 for Compressor Circuit 1	3
7	Comfort Alert Code 7 for Compressor Circuit 1	3
8	Comfort Alert Code 8 for Compressor Circuit 1	3
9	Comfort Alert Code 9 for Compressor Circuit 1	3
11	FAILED IGNITION	2
12	LO FLAME SENSE	1
13	FLAME LOST	2
14	UNEXPECTED FLAME	3
15	2nd Stage Gas valve improper voltage	2
20	REFRIGERANT LOW PRESSURE SWITCH OPEN – CIRCUIT 1	2
21	REFRIGERANT LOW PRESSURE SWITCH OPEN – CIRCUIT 2	2
22	MAIN LIMIT OPEN	2
29	REFRIGERANT HIGH PRESSURE SWITCH OPEN – CIRCUIT 1	2
30	REFRIGERANT HIGH PRESSURE SWITCH OPEN – CIRCUIT 2	2
33	MRLC (Rollout Limit) OPEN	2
34	Comfort Alert Code 4 for Compressor Circuit 2	3
35	Comfort Alert Code 5 for Compressor Circuit 2	3
36	Comfort Alert Code 6 for Compressor Circuit 2	3
37	Comfort Alert Code 7 for Compressor Circuit 2	3
38	Comfort Alert Code 8 for Compressor Circuit 2	3
39	Comfort Alert Code 9 for Compressor Circuit 2	3
42	Invalid Thermostat Selection	1
44	1st Stage COMBUSTION PRESS SWITCH CLOSED	2
46	1st Stage COMBUSTION PRESS SWITCH OPEN	2
49	FREEZE SWITCH OPEN – CIRCUIT 1	2
50	FREEZE SWITCH OPEN -CIRCUIT 2	2
55	2nd Stage COMBUSTION PRESS SWITCH CLOSED	2
57	2nd Stage COMBUSTION PRESS SWITCH OPEN	2,3
59	Condensate Drain Plugged	3
61	Blower Fault – NO RUN	3
83	Condenser Coil Temp Sensor Fail-OCT	2
84	Outdoor Air Temperature Sensor Fail-OAT	2
88	Emergency Stop Fault	3
93	CONTROL Fault	3
97	Smoke Detection	3

*Fault levels:0 = none, 1=warning, 2= problem, 3=shutdown

WIRING INFORMATION

LINE VOLTAGE
- -FACTORY STANDARD
- -FACTORY OPTION
- -FIELD INSTALLED

LOW VOLTAGE
- -FACTORY STANDARD
- -FACTORY OPTION
- -FIELD INSTALLED

REPLACEMENT WIRE
-MUST BE THE SAME SIZE AND TYPE OF I NSULATION AS ORIGINAL (105°C MIN.)

WARNING
-CABINET MUST BE PERMANE NTLY GROUNDED AND CONFORM TO I.E.C., N.E.C., C.E.C., NATIONAL WIRING REGULATIONS, AND LOCAL CODES A S APPLICABLE.

NOTES

1. CONNECTORS SUITABLE FOR USE WITH COPPER CONDUCTORS ONLY.
2. CONNECT FIELD WIRING IN GROUNDED RAIN TIGHT CONDUIT TO FUSED DISCONNECT.
3. CONNECT FIELD WIRE TO COMPRESSOR CONTACTOR (CC1).
4. REMOVE J3 AT (CC1) TO INSTALL LOW AMBIENT ACCESSORY.
5. IF REQUIRED, ATTACH CRANKCASE HEATER ACCESSORY TO CC1 (L1) AND CC1 (L2).
6. COMPRESSOR MOTOR THERMALLY PROTECTED. ALL 3 PHASE MODELS ARE PROTECTED UNDER PRIMARY SINGLE PHASE CONDITIONS.
7. TRANSFORMER FACTORY WIRED AS SHOWN BELOW. CHANGE PRIMARY VOLTAGE CONNECTIONS FOR ALTERNATE VOLTAGES, IF REQUIRED.

UNIT VOLTAGES - HZ	TRANSFORMER TERM.
200-220 - 50HZ	200
208 - 60HZ	230
230 - 60HZ	230
380 - 60HZ	400
380-415 - 50HZ	400
460 - 60HZ	460
575 - 60HZ	575

8. LOW VOLTAGE CIRCUIT IS N.E.C. CLASS 2 WITH A CLASS 2 TRANSFORMER, 24VAC, 50/60 HZ SUPPLIED.
9. MOTOR FACTORY WIRED FOR CORRECT VOLTAGE.
10. REMOVE PL24 FOR ECONOMIZER ACCESSORY. PL22 AND PL24 LOCATED IN RETURN AIR SECTION.

COMPONENT CODES

BC	BLOWER CONTACTOR
CA	COMFORT ALERT MODULE
CC	COMPRESSOR CONTACTOR
CCH	CRANKCASE HEATER
CDS	CLOGGED DRAIN SENSOR
CFS	CLOGGED FILTER SWITCH
COMP	COMPRESSOR
CT	CONTROL TRANSFORMER
DAT	DISCHARGE AIR SENSOR
DISC	DISCONNECT SWITCH
FLMS	FLAME SENSOR
FP	FAN PROVING
FS	FREEZE SENSOR
GFCO	GROUND FAULT CONVENIENCE OUTLET
GL	GROUND LUG
GND	GROUND
GV	GAS VALVE
HPC	HIGH PRESSURE CONTROL
IBM	INDOOR BLOWER MOTOR
IDM	INDUCED DRAFT MOTOR
IFC	INTEGRATED FURNACE CONTROL
LAC	LOW AMBIENT CONTROL
LPC	LOW PRESSURE CONTROL
MAS	MIXED AIR SENSOR
MLC	MAIN LIMIT CONTROL
MRLC	MANUAL RESET LIMIT CONTROL
NPC	NEGATIVE PRESSURE SWITCH
OAT	OUTSIDE AIR SENSOR
OFM	OUTDOOR FAN MOTOR
PL	PLUG
PT	POWER TRANSFORMER
RAT	RETURN AIR SENSOR
RC	RUN CAPACITOR
RTU-C	ROOFTOP UNIT CONTROL
SE	SPARK ELECTRODE
US	UNLOADER SOLENOID

WIRE COLOR CODE

BK.....BLACK	G.....GREEN	PR.....PURPLE
BR.....BROWN	G Y .....GRAY	R.....RED
BL.....BLUE	O.....ORANGE	W .....WHITE
		Y .....YELLOW

ELECTRICAL WIRING SCHEMATIC

GE DDC 2 STG 090/102/120
208/230/380/460V, 3PH, 60HZ

GE DDC 2 STG 072/090/102
380-415V, 3PH, 50HZ

APPROVED:	CHECKED:	ORIGINAL RELEASE NO.:
MODELED BY: TCJW	DATE: 11-14-17	R-1071S126
PART NO.: 90-106178-13		REV: 01

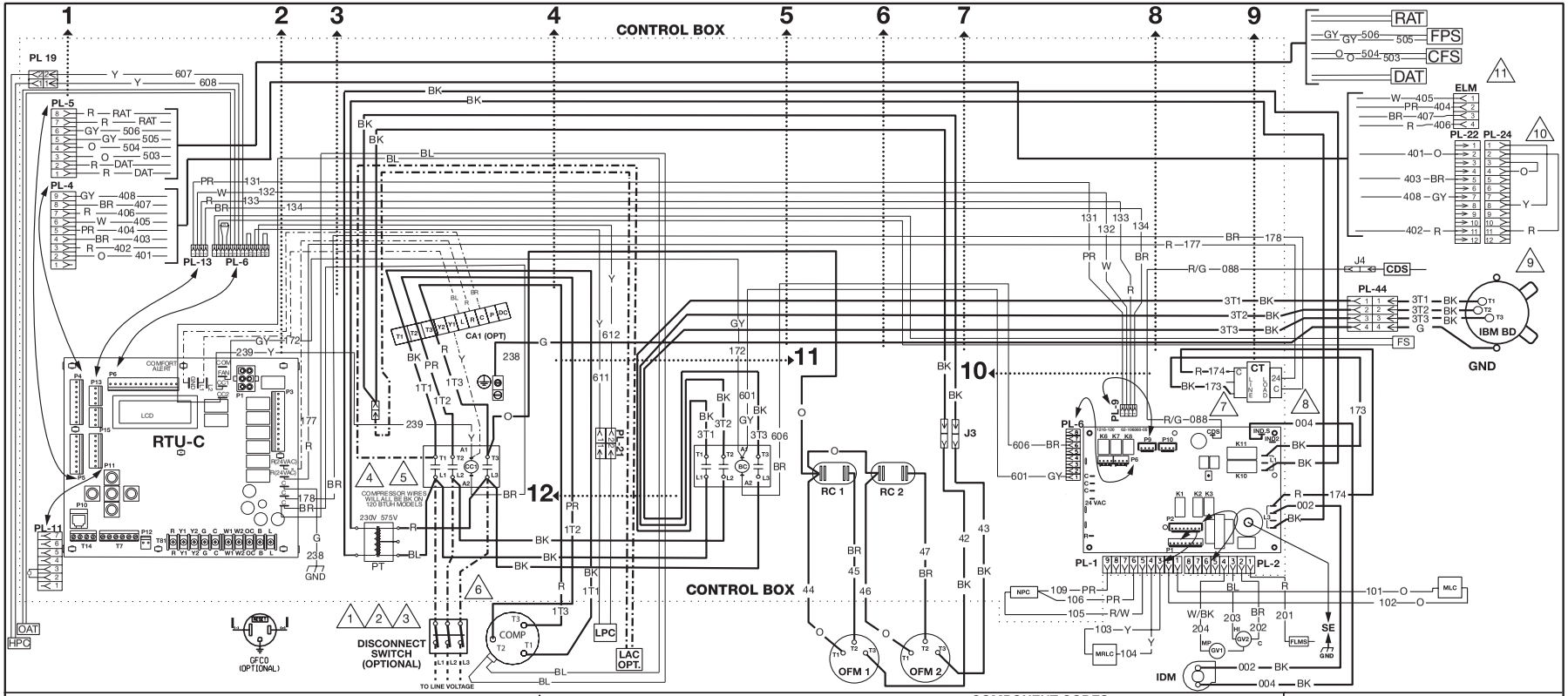

WIRING INFORMATION

LINE VOLTAGE
- -FACTORY STANDARD
- -FACTORY OPTION
- -FIELD INSTALLED

LOW VOLTAGE
- -FACTORY STANDARD
- -FACTORY OPTION
- -FIELD INSTALLED

REPLACEMENT WIRE
-MUST BE THE SAME SIZE AND TYPE OF INSULATION AS ORIGINAL (105°C.MIN.)

WARNING
-CABINET MUST BE PERMANENTLY GROUNDED AND CONFORM TO I.E.C., N.E.C., C.E.C., NATIONAL WIRING REGULATIONS, AND LOCAL CODES A S APPLICABLE.

NOTES

1. CONNECTORS SUITABLE FOR USE WITH COPPER CONDUCTORS ONLY.
2. CONNECT FIELD WIRING IN GROUNDED RAIN TIGHT CONDUIT TO FUSED DISCONNECT.
3. CONNECT FIELD WIRE TO COMPRESSOR CONTACTOR (CC1).
4. REMOVE J3 AT (CC1) TO INSTALL LOW AMBIENT ACCESSORY.
5. IF REQUIRED, ATTACH CRANKCASE HEATER ACCESSORY TO CC1 (L1) AND CC1 (L2).
6. COMPRESSOR MOTOR THERMALLY PROTECTED. ALL 3 PHASE MODELS ARE PROTECTED UNDER PRIMARY SINGLE PHASE CONDITIONS.
7. TRANSFORMER FACTORY WIRED AS SHOWN BELOW. CHANGE PRIMARY VOLTAGE CONNECTION FOR ALTERNATE VOLTAGES, IF REQUIRED.

UNIT VOLTAGES –HZ	TRANSFORMER TERM.
200-220 –50 HZ	200
208 –60 HZ	230
230 –60 HZ	230
380 –60 HZ	400
380-415 -50 HZ	400
460 –60 HZ	460
575 –60 HZ	230

8. LOW VOLTAGE CIRCUIT IS N.E.C. CLASS 2 WITH A CLASS 2 TRANSFORMER, 24VAC 50/60 HZ SUPPLIED.
9. MOTOR FACTORY WIRED FOR CORRECT VOLTAGE.
10. REMOVE PL24 FOR ECONOMIZER ACCESSORY. PL22 AND PL24 LOCATED IN RETURN AIR SECTION.
11. CONNECT TO ECONOMIZER LOGIC MODULE.

COMPONENT CODES

BC	BLOWER CONTACTOR
CA	COMFORT ALERT MODULE
CC	COMPRESSOR CONTACTOR
CCH	CRANKCASE HEATER
CDS	CLOG DRAIN SENSOR
CFS	CLOGGED FILTER SWITCH
COMP	COMPRESSOR
CT	CONTROL TRANSFORMER
DAT	DISCHARGE AIR SENSOR
DISC	DISCONNECT SWITCH
ELM	ECONOMIZER LOGIC MODULE
FLMS	FLAME SENSOR
FP	FAN PROVING SWITCH
FS	FREEZE SENSOR
FT	FREEZE STAT
GFCO	GROUND FAULT CONVENIENCE OUTLET
GL	GROUND LUG
GND	GROUND
GV	GAS VALVE
HPC	HIGH PRESSURE CONTROL
IBM	INDOOR BLOWER MOTOR
IDM	INDUCED DRAFT MOTOR
IFC	INTEGRATED FURNACE CONTROL
J	JUMPER
LAC	LOW AMBIENT CONTROL
LPC	LOW PRESSURE CONTROL
MLC	MAIN LIMIT CONTROL
MRLC	MANUAL RESET LIMIT CONTROL
NPC	NEGATIVE PRESSURE SWITCH
OAT	OUTSIDE AIR SENSOR
OFM	OUTDOOR FAN MOTOR
PL	PLUG
PT	POWER TRANSFORMER
RAT	RETURN AIR SENSOR
RC	RUN CAPACITOR
RTU-C	ROOFTOP UNIT CONTROL
SE	SPARK ELECTRODE
US	UNLOADER SOLENOID
##	WIRE TIES

WIRE COLOR CODE

BK.....BLACK	G.....GREEN	PR.....PURPLE
BR.....BROWN	GY.....GRAY	R.....RED
BL.....BLUE	O.....ORANGE	W.....WHITE
		Y.....YELLOW

ELECTRICAL WIRING DIAGRAM

GE DDC 2-STG 090/102/120
575V, 3PH, 60HZ

APPROVED:	CHECKED:	ORIGINAL RELEASE NO.:
MODELED BY: TCJW	DATE: 11-15-17	R-1071S126
PART NO.: 90-106177-14		REV: 00

FIGURE 44

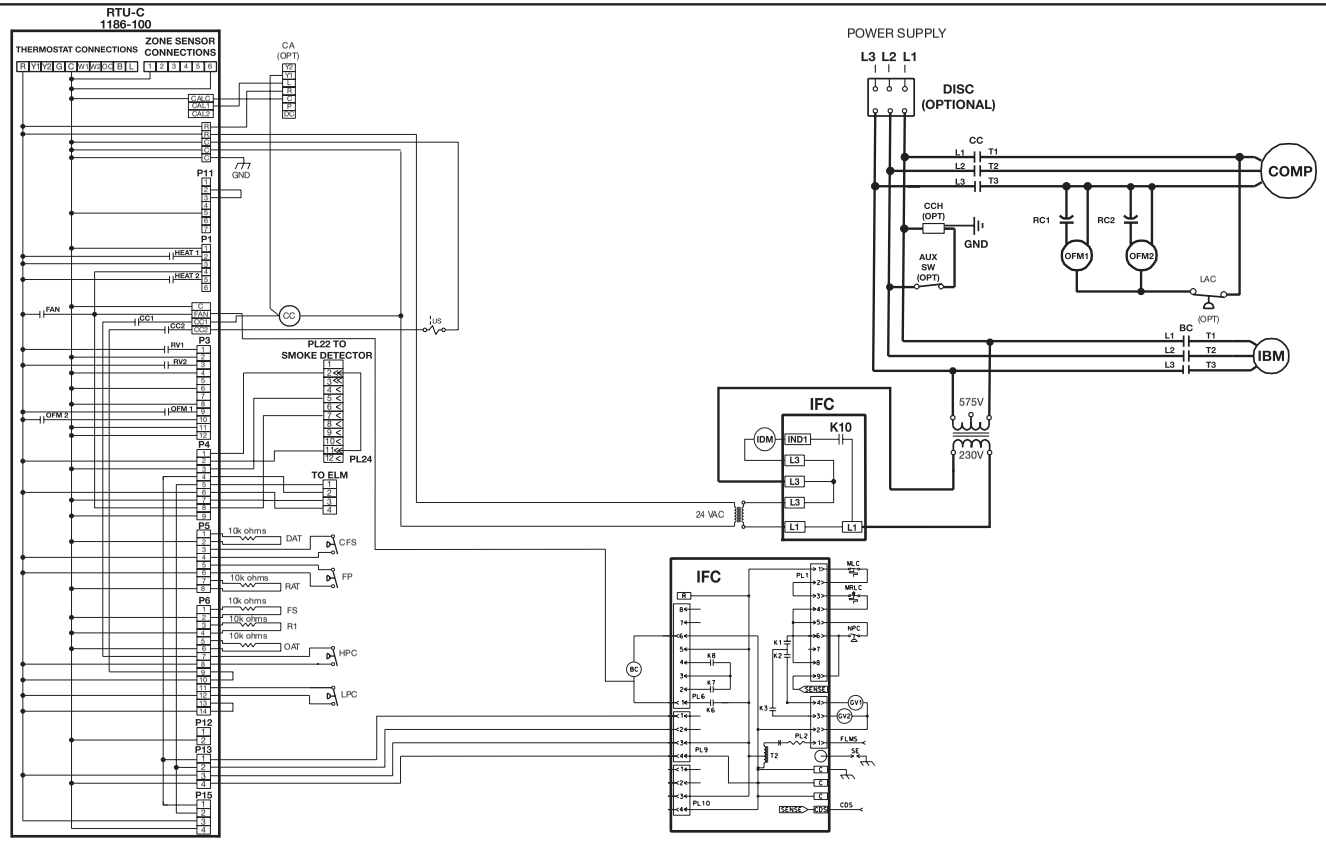

ALARM CODES

CODE	Description	FAULT LEVEL – 0,1,2,3*
0	STANDBY	0
c	COMPRESSOR ON – Low (Flashing if in time delay)	0
C	COMPRESSOR ON – High (Flashing if in time delay)	0
E	Economizer Cooling – No Compressor	0
F	CONTINUOUS FAN	0
h	HEAT ON – Low Stage	0
H	GAS HEAT ON – High Stage	0
4	Comfort Alert Code 4 for Compressor Circuit 1	3
5	Comfort Alert Code 5 for Compressor Circuit 1	3
6	Comfort Alert Code 6 for Compressor Circuit 1	3
7	Comfort Alert Code 7 for Compressor Circuit 1	3
8	Comfort Alert Code 8 for Compressor Circuit 1	3
9	Comfort Alert Code 9 for Compressor Circuit 1	3
11	FAILED IGNITION	2
12	LO FLAME SENSE	1
13	FLAME LOST	2
14	UNEXPECTED FLAME	3
15	2nd Stage Gas valve improper voltage	2
20	REFRIGERANT LOW PRESSURE SWITCH OPEN – CIRCUIT 1	2
21	REFRIGERANT LOW PRESSURE SWITCH OPEN – CIRCUIT 2	2
22	MAIN LIMIT OPEN	2
29	REFRIGERANT HIGH PRESSURE SWITCH OPEN – CIRCUIT 1	2
30	REFRIGERANT HIGH PRESSURE SWITCH OPEN – CIRCUIT 2	2
33	MRLC (Rollout Limit) OPEN	2
34	Comfort Alert Code 4 for Compressor Circuit 2	3
35	Comfort Alert Code 5 for Compressor Circuit 2	3
36	Comfort Alert Code 6 for Compressor Circuit 2	3
37	Comfort Alert Code 7 for Compressor Circuit 2	3
38	Comfort Alert Code 8 for Compressor Circuit 2	3
39	Comfort Alert Code 9 for Compressor Circuit 2	3
42	Invalid Thermostat selection	1
44	1st Stage COMBUSTION PRESS SWITCH CLOSED	2
46	1st Stage COMBUSTION PRESS SWITCH OPEN	2
49	FREEZE SWITCH OPEN – CIRCUIT 1	2
50	FREEZE SWITCH OPEN -CIRCUIT 2	2
55	2nd Stage COMBUSTION PRESS SWITCH CLOSED	2
57	2nd Stage COMBUSTION PRESS SWITCH OPEN	2,3
59	Condensate Drain Plugged	3
61	Blower Fault – NO RUN	3
83	Condenser Coil Temp Sensor Fail-OCT	2
84	Outdoor Air Temperature Sensor Fail-OAT	2
88	Emergency Stop Fault	3
93	CONTROL Fault	3
97	Smoke Detection	3

*Fault levels:0 = none, 1=warning, 2= problem, 3=shutdown

WIRING INFORMATION

LINE VOLTAGE
- -FACTORY STANDARD
- -FACTORY OPTION
- -FIELD INSTALLED

LOW VOLTAGE
- -FACTORY STANDARD
- -FACTORY OPTION
- -FIELD INSTALLED

REPLACEMENT WIRE
-MUST BE THE SAME SIZE AND TYPE OF I NSULATION AS ORIGINAL (105°C MIN.)

WARNING
-CABINET MUST BE PERMANE NTLY GROUNDED AND CONFORM TO I.E.C., N.E.C., C.E.C., NATIONAL WIRING REGULATIONS, AND LOCAL CODES A S APPLICABLE.

NOTES

1. CONNECTORS SUITABLE FOR USE WITH COPPER CONDUCTORS ONLY.
2. CONNECT FIELD WIRING IN GROUNDED RAIN TIGHT CONDUIT TO FUSED DISCONNECT.
3. CONNECT FIELD WIRE TO COMPRESSOR CONTACTOR (CC1).
4. REMOVE J3 AT (CC1) TO INSTALL LOW AMBIENT ACCESSORY.
5. IF REQUIRED, ATTACH CRANKCASE HEATER ACCESSORY TO CC1 (L1) AND CC1 (L2).
6. COMPRESSOR MOTOR THERMALLY PROTECTED. ALL 3 PHASE MODELS ARE PROTECTED UNDER PRIMARY SINGLE PHASE CONDITIONS.
7. TRANSFORMER FACTORY WIRED AS SHOWN BELOW. CHANGE PRIMARY VOLTAGE CONNECTIONS FOR ALTERNATE VOLTAGES, IF REQUIRED.

UNIT VOLTAGES - HZ	TRANSFORMER TERM.
200-220 - 50HZ	200
208 - 60HZ	230
230 - 60HZ	230
380 - 60HZ	400
380-415 - 50HZ	400
460 - 60HZ	460
575 - 60HZ	230

8. LOW VOLTAGE CIRCUIT IS N.E.C. CLASS 2 WITH A CLASS 2 TRANSFORMER, 24VAC, 50/60 HZ SUPPLIED.
9. MOTOR FACTORY WIRED FOR CORRECT VOLTAGE.
10. REMOVE PL24 FOR ECONOMIZER ACCESSORY. PL22 AND PL24 LOCATED IN RETURN AIR SECTION.

COMPONENT CODES

BC	BLOWER CONTACTOR
CA	COMFORT ALERT MODULE
CC	COMPRESSOR CONTACTOR
CCH	CRANKCASE HEATER
CDS	CLOGGED DRAIN SENSOR
CFS	CLOGGED FILTER SWITCH
COMP	COMPRESSOR
CT	CONTROL TRANSFORMER
DAT	DISCHARGE AIR SENSOR
DISC	DISCONNECT SWITCH
FLMS	FLAME SENSOR
FP	FAN PROVING
FS	FREEZE SENSOR
GFCO	GROUND FAULT CONVENIENCE OUTLET
GL	GROUND LUG
GND	GROUND
GV	GAS VALVE
HPC	HIGH PRESSURE CONTROL
IBM	INDOOR BLOWER MOTOR
IDM	INDUCED DRAFT MOTOR
IFC	INTEGRATED FURNACE CONTROL
LAC	LOW AMBIENT CONTROL
LPC	LOW PRESSURE CONTROL
MAS	MIXED AIR SENSOR
MLC	MAIN LIMIT CONTROL
MRLC	MANUAL RESET LIMIT CONTROL
NPC	NEGATIVE PRESSURE SWITCH
OAT	OUTSIDE AIR SENSOR
OFM	OUTDOOR FAN MOTOR
PL	PLUG
PT	POWER TRANSFORMER
RAT	RETURN AIR SENSOR
RC	RUN CAPACITOR
RTU-C	ROOFTOP UNIT CONTROL
SE	SPARK ELECTRODE
US	UNLOADER SOLENOID

WIRE COLOR CODE

BK.....BLACK	G.....GREEN	PR.....PURPLE
BR.....BROWN	GY .....GRAY	R.....RED
BL.....BLUE	O.....ORANGE	W .....WHITE
		Y.....YELLOW

ELECTRICAL WIRING SCHEMATIC

GE DDC 2-STG 090/102/120
575V, 3PH, 60HZ

APPROVED:	CHECKED:	ORIGINAL RELEASE NO.:
MODELED BY: TCJW	DATE: 11-20-17	R-1071S126
PART NO.: 90-106178-14		REV: 01

FIGURE 45

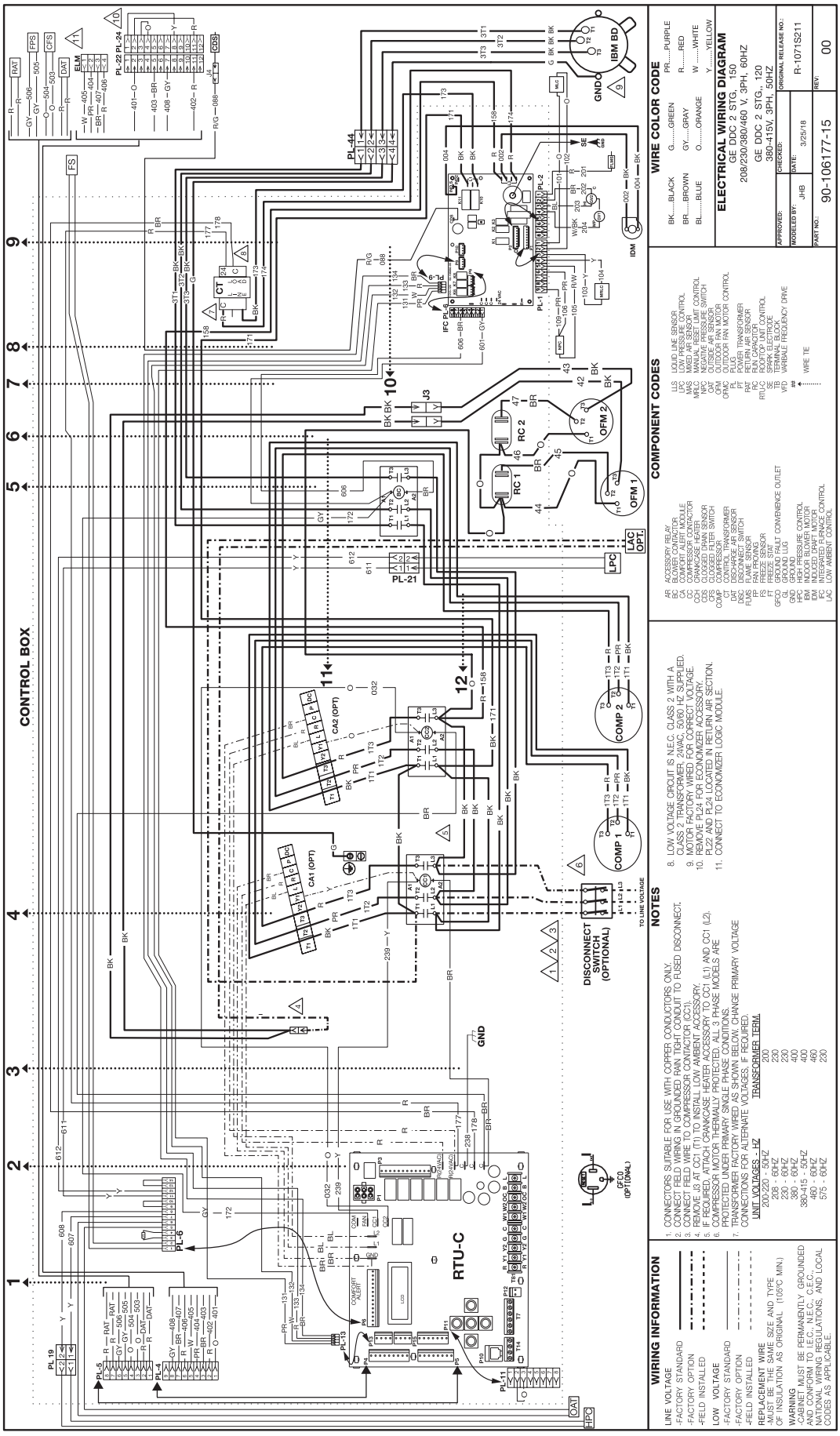
CONTROL BOX
RTU-C
IBM BD
IDM
COMP 1
COMP 2
OFM 1
OFM 2
RC 1
RC 2
CA1 (OPT)
CA2 (OPT)
DISCONNECT SWITCH (OPTIONAL)
TO LINE VOLTAGE
GND
GFCI (OPTIONAL)
WIRE COLOR CODE
BK....BLACK G.....GREEN PR....PURPLE
BR....BROWN GY....GRAY R.....RED
BL.....BLUE O.....ORANGE W .....WHITE
Y.....YELLOW
ELECTRICAL WIRING DIAGRAM
GE DDC 2 STG, 150
208/230/380/460 V, 3PH, 60HZ
GE DDC 2 STG., 120
380-415V, 3PH, 50HZ
APPROVED:
MODELED BY: JHB
CHECKED:
DATE: 3/25/18
ORIGINAL RELEASE NO.: R-1071S211
PART NO.: 90-106177-15
REV: 00
COMPONENT CODES
AR ACCESSORY RELAY
BC BLOWER CONTACTOR
CB CIRCUIT BREAKER MODULE
CC COMPRESSOR CONTACTOR
CCH CRANKCASE HEATER
CDS DISCHARGE AIR SENSOR
CFS CLOGGED FILTER SWITCH
COMP COMPRESSOR
CT CURRENT TRANSFORMER
DAT DISCHARGE AIR SENSOR
DISC DISCONNECT SWITCH
FLAS FLASHER MODULE
FP FAN PROVING
FS FREEZE SENSOR
IFC INTERLOCK
GFCI GROUND FAULT CONVENIENCE OUTLET
GL GROUND LUG
GND GROUND
HPC HIGH PRESSURE CONTROL
IBM INDOOR BLOWER MOTOR
IDM INDOOR BLOWER MOTOR
IFC INTERFACE BOARD
LAC LOW AMBIENT CONTROL
LLS LIQUID LINE SENSOR
LPC LOW PRESSURE CONTROL
MAS MIXED AIR SENSOR
MVC MANUAL VENT CONTROL
NPC NEGATIVE PRESSURE SWITCH
OAT OUTSIDE AIR SENSOR
OFM OUTDOOR FAN MOTOR
OFMC OUTDOOR FAN MOTOR CONTROL
PL PLUG
PT PLUG TRANSFORMER
RAT RETURN AIR SENSOR
RC RUN CAPACITOR
RPC REVERSING VALVE CONTROL
RTS/C SPARK ELECTRODE
TB TERMINAL BLOCK
VFD VARIABLE FREQUENCY DRIVE
WIRE TIE
NOTES
1. CONNECTORS SUITABLE FOR USE WITH COPPER CONDUCTORS ONLY.
2. CONNECT FIELD WIRING IN GROUNDED RAIN TIGHT CONDUIT TO FUSED DISCONNECT.
3. CONNECT FIELD WIRE TO COMPRESSOR CONTACTOR (CC1).
4. REMOVE 40 AT CC1 (T1) TO INSTALL LOW AMBIENT ACCESSORY.
5. REMOVE 41 AT CC1 (T2) TO INSTALL CRANKCASE HEATER ACCESSORY (CCH).
6. COMPRESSOR MOTOR THERMALLY PROTECTED. ALL 3 PHASE MODELS ARE PROTECTED UNDER PRIMARY SINGLE PHASE CONDITIONS.
7. TRANSFORMER FACTORY WIRED AS SHOWN BELOW, CHANGE PRIMARY VOLTAGE CONNECTIONS FOR ALTERNATE VOLTAGES, IF REQUIRED.
UNIT VOLTAGES - HZ TRANSFORMER TERM.
200-220 - 50HZ 200
208 - 60HZ 230
230 - 60HZ 230
380 - 50HZ 400
380-415 - 50HZ 400
460 - 60HZ 460
575 - 60HZ 230
8. LOW VOLTAGE CIRCUIT IS N.E.C. CLASS 2 WITH A CLASS 2 TRANSFORMER. 24VAC, 50/60 HZ SUPPLIED.
9. MOTOR FACTORY WIRED FOR CORRECT VOLTAGE.
10. REMOVE PL24 FOR ECONOMIZER ACCESSORY. PL22 AND PL24 LOCATED IN RETURN AIR SECTION.
11. CONNECT TO ECONOMIZER LOGIC MODULE.
WIRING INFORMATION
LINE VOLTAGE
-FACTORY STANDARD
-FACTORY OPTION
-FIELD INSTALLED
LOW VOLTAGE
-FACTORY STANDARD
-FACTORY OPTION
-FIELD INSTALLED
REPLACEMENT WIRE
-MUST BE THE SAME SIZE AND TYPE OF INSULATION AS ORIGINAL (105°C MIN.)
WARNING
-CABINET MUST BE PERMANENTLY GROUNDED AND CONFORM TO I.E.C., N.E.C., C.E.C., NATIONAL WIRING REGULATIONS, AND LOCAL CODES AS APPLICABLE.

FIGURE 46

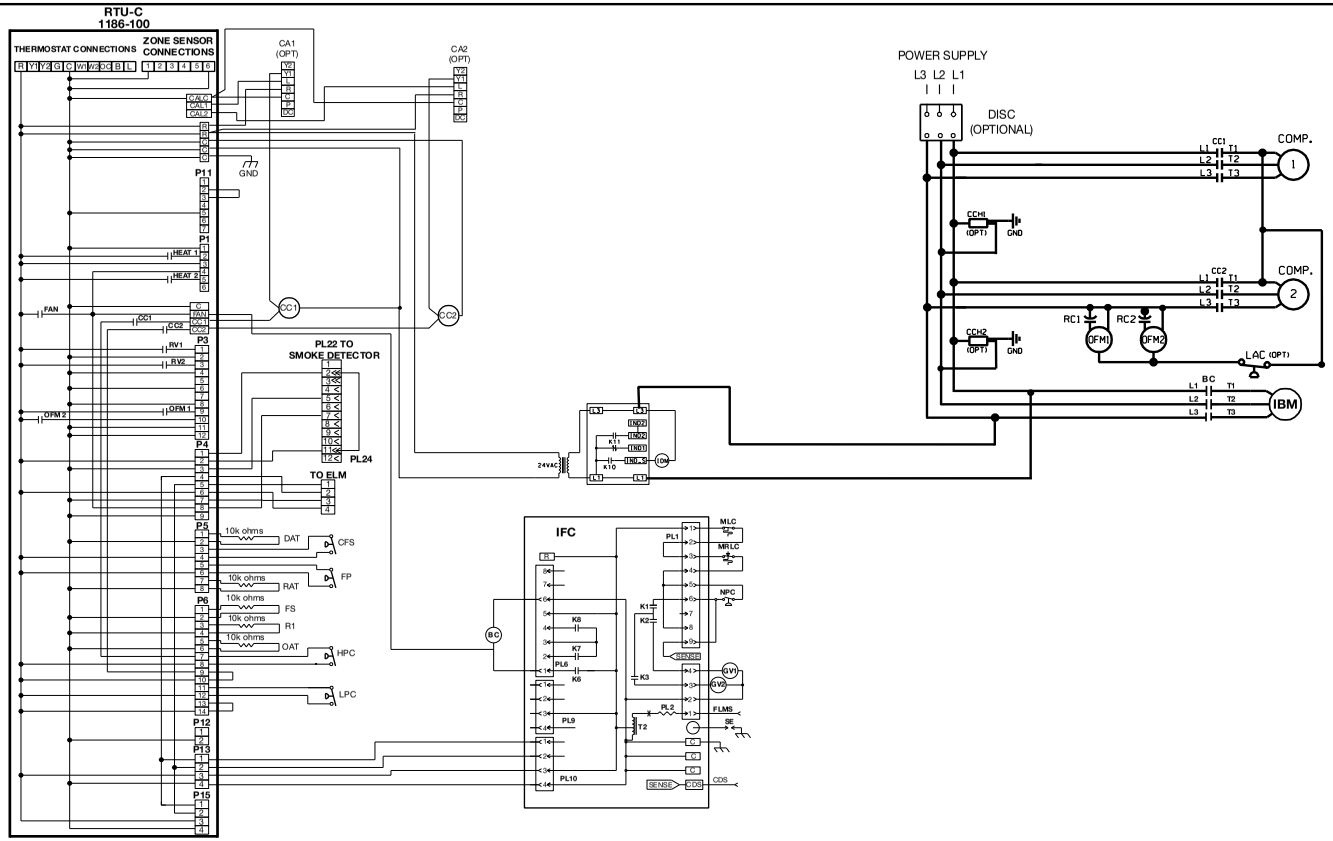

ALARM CODES

CODE	Description	FAULT LEVEL ~0,1,2,3*
0	STANDBY	0
c	COMPRESSOR ON – Low (Flashing if in time delay)	0
C	COMPRESSOR ON – High (Flashing if in time delay)	0
E	Economizer Cooling – No Compressor	0
F	CONTINUOUS FAN	0
h	HEAT ON – Low Stage	0
H	GAS HEAT ON – High Stage	0
4	Comfort Alert Code 4 for Compressor Circuit 1	3
5	Comfort Alert Code 5 for Compressor Circuit 1	3
6	Comfort Alert Code 6 for Compressor Circuit 1	3
7	Comfort Alert Code 7 for Compressor Circuit 1	3
8	Comfort Alert Code 8 for Compressor Circuit 1	3
9	Comfort Alert Code 9 for Compressor Circuit 1	3
11	FAILED IGNITION	2
12	LO FLAME SENSE	1
13	FLAME LOST	2
14	UNEXPECTED FLAME	3
15	2nd Stage Gas valve improper voltage	2
20	REFRIGERANT LOW PRESSURE SWITCH OPEN – CIRCUIT 1	2
21	REFRIGERANT LOW PRESSURE SWITCH OPEN – CIRCUIT 2	2
22	MAIN LIMIT OPEN	2
29	REFRIGERANT HIGH PRESSURE SWITCH OPEN – CIRCUIT 1	2
30	REFRIGERANT HIGH PRESSURE SWITCH OPEN – CIRCUIT 2	2
33	MRLC (Rollout Limit) OPEN	2
34	Comfort Alert Code 4 for Compressor Circuit 2	3
35	Comfort Alert Code 5 for Compressor Circuit 2	3
36	Comfort Alert Code 6 for Compressor Circuit 2	3
37	Comfort Alert Code 7 for Compressor Circuit 2	3
38	Comfort Alert Code 8 for Compressor Circuit 2	3
39	Comfort Alert Code 9 for Compressor Circuit 2	3
42	Invalid Thermostat Selection	1
44	1st Stage COMBUSTION PRESS SWITCH CLOSED	2
46	1st Stage COMBUSTION PRESS SWITCH OPEN	2
49	FREEZE SWITCH OPEN – CIRCUIT 1	2
50	FREEZE SWITCH OPEN -CIRCUIT 2	2
55	2nd Stage COMBUSTION PRESS SWITCH CLOSED	2
57	2nd Stage COMBUSTION PRESS SWITCH OPEN	2,3
59	Condensate Drain Plugged	3
61	Blower Fault – NO RUN	3
83	Condenser Coil Temp Sensor Fail-OCT	2
84	Outdoor Air Temperature Sensor Fail-OAT	2
88	Emergency Stop Fault	3
93	CONTROL Fault	3
97	Smoke Detection	3

*Fault levels: 0 = none, 1=warning, 2= problem, 3=shutdown

WIRING INFORMATION

LINE VOLTAGE
- -FACTORY STANDARD
- -FACTORY OPTION
- -FIELD INSTALLED

LOW VOLTAGE
- -FACTORY STANDARD
- -FACTORY OPTION
- -FIELD INSTALLED

REPLACEMENT WIRE
-MUST BE THE SAME SIZE AND TYPE OF INSULATION AS ORIGINAL (105°C MIN.)

WARNING
-CABINET MUST BE PERMANENTLY GROUNDED AND CONFORM TO I.E.C., N.E.C., C.E.C., NATIONAL WIRING REGULATIONS, AND LOCAL CODES AS APPLICABLE.

NOTES

1. CONNECTORS SUITABLE FOR USE WITH COPPER CONDUCTORS ONLY.
2. CONNECT FIELD WIRING IN GROUNDED RAIN TIGHT CONDUIT TO FUSED DISCONNECT.
3. CONNECT FIELD WIRE TO COMPRESSOR CONTACTOR (CC1).
4. REMOVE J3 AT (CC1) TO INSTALL LOW AMBIENT ACCESSORY.
5. IF REQUIRED, ATTACH CRANKCASE HEATER ACCESSORY TO CC1 (L1) AND CC1 (L2).
6. COMPRESSOR MOTOR THERMALLY PROTECTED. ALL 3 PHASE MODELS ARE PROTECTED UNDER PRIMARY SINGLE PHASE CONDITIONS.
7. TRANSFORMER FACTORY WIRED AS SHOWN BELOW. CHANGE PRIMARY VOLTAGE CONNECTIONS FOR ALTERNATE VOLTAGES, IF REQUIRED.

UNIT VOLTAGES - HZ	TRANSFORMER TERM.
200-220 - 50HZ	200
208 - 60HZ	230
230 - 60HZ	230
380 - 60HZ	400
380-415 - 50HZ	400
460 - 60HZ	460
575 - 60HZ	575

8. LOW VOLTAGE CIRCUIT IS N.E.C. CLASS 2 WITH A CLASS 2 TRANSFORMER, 24VAC, 50/60 HZ SUPPLIED.
9. MOTOR FACTORY WIRED FOR CORRECT VOLTAGE.
10. REMOVE PL24 FOR ECONOMIZER ACCESSORY. PL22 AND PL24 LOCATED IN RETURN AIR SECTION.

COMPONENT CODES

BC	BLOWER CONTACTOR
CA	COMFORT ALERT MODULE
CC	COMPRESSOR CONTACTOR
CCH	CRANKCASE HEATER
CDS	CLOGGED DRAIN SENSOR
CFS	CLOGGED FILTER SWITCH
COMP	COMPRESSOR
CT	CONTROL TRANSFORMER
DAT	DISCHARGE AIR SENSOR
DISC	DISCONNECT SWITCH
FLMS	FLAME SENSOR
FP	FAN PROVING
FS	FREEZE SENSOR
GFCO	GROUND FAULT CONVENIENCE OUTLET
GL	GROUND LUG
GND	GROUND
GV	GAS VALVE
HPC	HIGH PRESSURE CONTROL
IBM	INDOOR BLOWER MOTOR
IDM	INDUCED DRAFT MOTOR
IFC	INTEGRATED FURNACE CONTROL
LAC	LOW AMBIENT CONTROL
LPC	LOW PRESSURE CONTROL
MAS	MIXED AIR SENSOR
MLC	MAIN LIMIT CONTROL
MRLC	MANUAL RESET LIMIT CONTROL
NPC	NEGATIVE PRESSURE SWITCH
OAT	OUTSIDE AIR SENSOR
OFM	OUTDOOR FAN MOTOR
PL	PLUG
PT	POWER TRANSFORMER
RAT	RETURN AIR SENSOR
RC	RUN CAPACITOR
RTU-C	ROOFTOP UNIT CONTROL
SE	SPARK ELECTRODE
US	UNLOADER SOLENOID

WIRE COLOR CODE

BK.....BLACK	G.....GREEN	PR.....PURPLE
BR.....BROWN	G Y .....GRAY	R.....RED
BL.....BLUE	O.....ORANGE	W .....WHITE
		Y.....YELLOW

ELECTRICAL WIRING SCHEMATIC

GE DDC 2 STG 150
208/230/380/460V, 3PH, 60HZ

GE DDC 2 STG 150
380-415V, 3PH, 50HZ

APPROVED:	CHECKED:	ORIGINAL RELEASE NO.:
MODELED BY: JHB	DATE: 03-19-18	R-1071S208
PART NO.: 90-106178-15		REV: 00

FIGURE 47

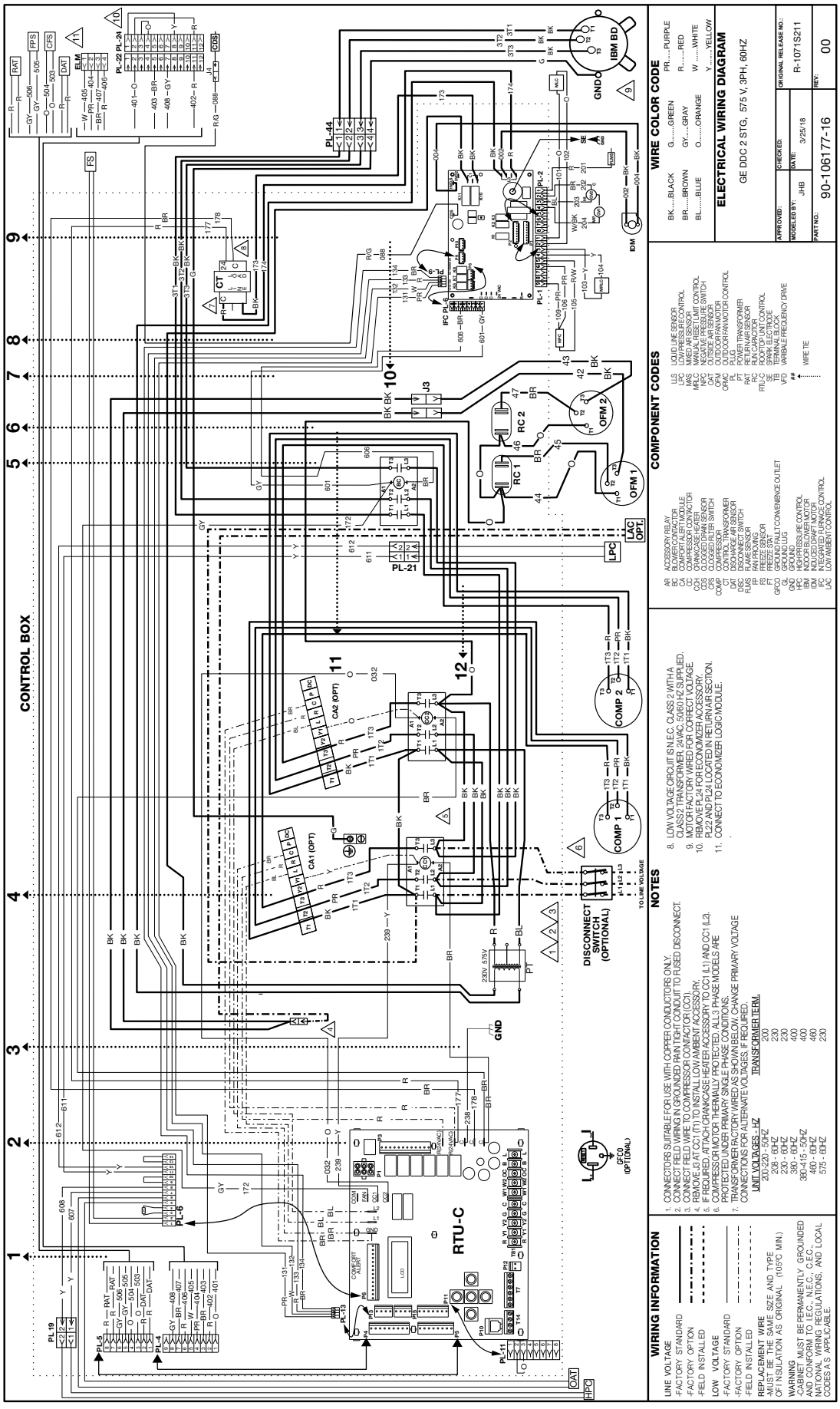
ELECTRICAL WIRING DIAGRAM
GE DDC 2 STG, 575 V, 3PH, 60HZ
90-106177-16
00
R-1071S211
3/25/18
JHB
WIRE COLOR CODE
BK....BLACK
BR....BROWN
BL.....BLUE
G.....GREEN
GY.....GRAY
O.....ORANGE
PR....PURPLE
R.....RED
W.....WHITE
Y.....YELLOW
COMPONENT CODES
WIRING INFORMATION
NOTES
CONTROL BOX
RTU-C
COMP 1
COMP 2
DISCONNECT SWITCH (OPTIONAL)
IBM BD
IDM
OFM 1
OFM 2
RC 1
RC 2
CA1 (OPT)
CA2 (OPT)
PL-44
PL-21
PL-22 PL-24
PL-6
PL-5
PL-4
PL-13
PL-11
PL 19
LAC OPT.
LPC
OAT
FPC
CFS
PP-S
FS
RAT
DAT
ELM
CT
GND
TO LINE VOLTAGE

FIGURE 48

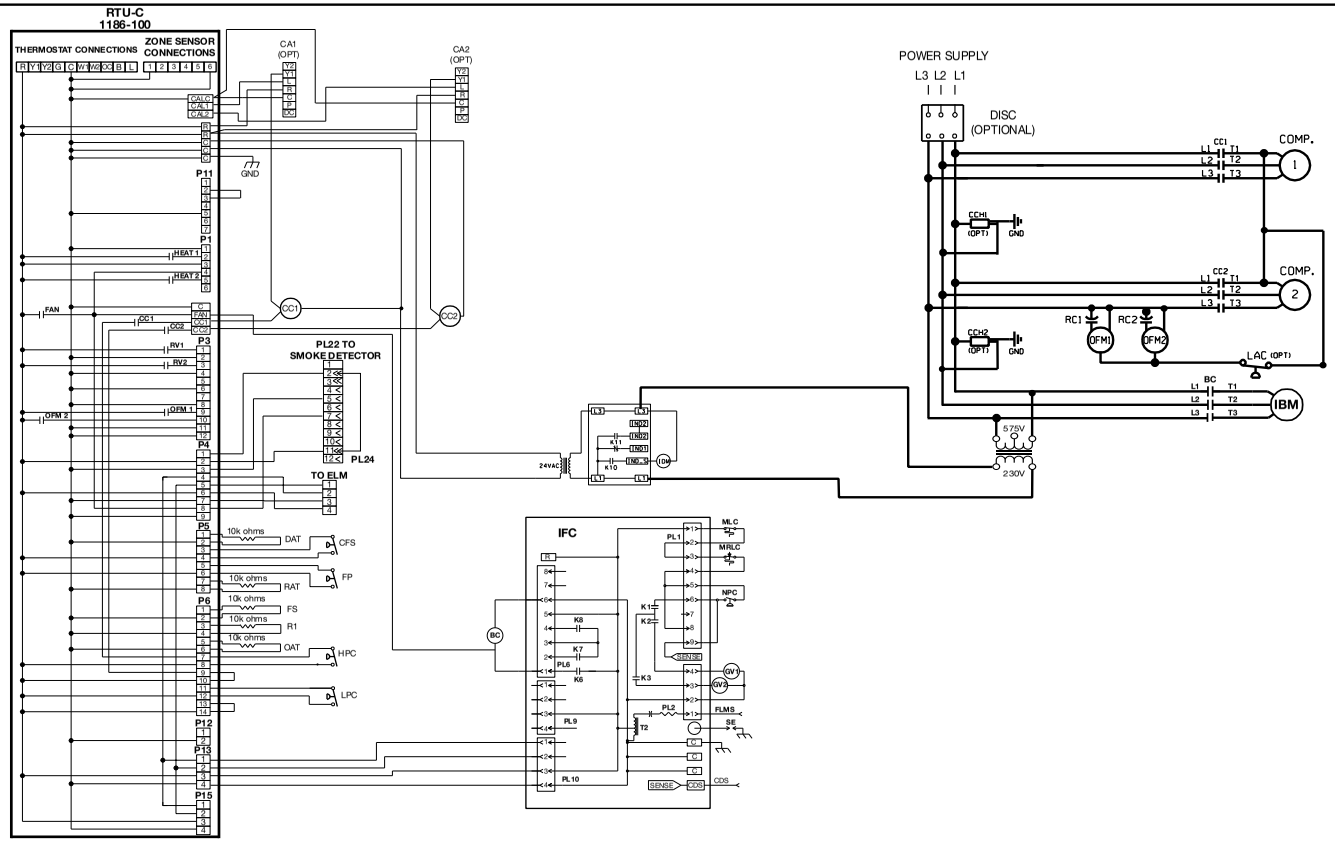

ALARM CODES

CODE	Description	FAULT LEVEL –0,1,2,3*
0	STANDBY	0
c	COMPRESSOR ON – Low (Flashing if in time delay)	0
C	COMPRESSOR ON – High (Flashing if in time delay)	0
E	Economizer Cooling – No Compressor	0
F	CONTINUOUS FAN	0
h	HEAT ON – Low Stage	0
H	GAS HEAT ON – High Stage	0
4	Comfort Alert Code 4 for Compressor Circuit 1	3
5	Comfort Alert Code 5 for Compressor Circuit 1	3
6	Comfort Alert Code 6 for Compressor Circuit 1	3
7	Comfort Alert Code 7 for Compressor Circuit 1	3
8	Comfort Alert Code 8 for Compressor Circuit 1	3
9	Comfort Alert Code 9 for Compressor Circuit 1	3
11	FAILED IGNITION	2
12	LO FLAME SENSE	1
13	FLAME LOST	2
14	UNEXPECTED FLAME	3
15	2nd Stage Gas valve improper voltage	2
20	REFRIGERANT LOW PRESSURE SWITCH OPEN – CIRCUIT 1	2
21	REFRIGERANT LOW PRESSURE SWITCH OPEN – CIRCUIT 2	2
22	MAIN LIMIT OPEN	2
29	REFRIGERANT HIGH PRESSURE SWITCH OPEN – CIRCUIT 1	2
30	REFRIGERANT HIGH PRESSURE SWITCH OPEN – CIRCUIT 2	2
33	MRLC (Rollout Limit) OPEN	2
34	Comfort Alert Code 4 for Compressor Circuit 2	3
35	Comfort Alert Code 5 for Compressor Circuit 2	3
36	Comfort Alert Code 6 for Compressor Circuit 2	3
37	Comfort Alert Code 7 for Compressor Circuit 2	3
38	Comfort Alert Code 8 for Compressor Circuit 2	3
39	Comfort Alert Code 9 for Compressor Circuit 2	3
42	Invalid Thermostat Selection	1
44	1st Stage COMBUSTION PRESS SWITCH CLOSED	2
46	1st Stage COMBUSTION PRESS SWITCH OPEN	2
49	FREEZE SWITCH OPEN – CIRCUIT 1	2
50	FREEZE SWITCH OPEN -CIRCUIT 2	2
55	2nd Stage COMBUSTION PRESS SWITCH CLOSED	2
57	2nd Stage COMBUSTION PRESS SWITCH OPEN	2,3
59	Condensate Drain Plugged	3
61	Blower Fault – NO RUN	3
83	Condenser Coil Temp Sensor Fail-OCT	2
84	Outdoor Air Temperature Sensor Fail-OAT	2
88	Emergency Stop Fault	3
93	CONTROL Fault	3
97	Smoke Detection	3

*Fault levels:0 = none, 1=warning, 2= problem, 3=shutdown

WIRING INFORMATION

LINE VOLTAGE
- -FACTORY STANDARD
- -FACTORY OPTION
- -FIELD INSTALLED

LOW VOLTAGE
- -FACTORY STANDARD
- -FACTORY OPTION
- -FIELD INSTALLED

REPLACEMENT WIRE
-MUST BE THE SAME SIZE AND TYPE OF INSULATION AS ORIGINAL (105ºC MIN.)

WARNING
-CABINET MUST BE PERMANENTLY GROUNDED AND CONFORM TO I.E.C., N.E.C., C.E.C., NATIONAL WIRING REGULATIONS, AND LOCAL CODES AS APPLICABLE.

NOTES

1. CONNECTORS SUITABLE FOR USE WITH COPPER CONDUCTORS ONLY.
2. CONNECT FIELD WIRING IN GROUNDED RAIN TIGHT CONDUIT TO FUSED DISCONNECT.
3. CONNECT FIELD WIRE TO COMPRESSOR CONTACTOR (CC1).
4. REMOVE J3 AT (CC1) TO INSTALL LOW AMBIENT ACCESSORY.
5. IF REQUIRED, ATTACH CRANKCASE HEATER ACCESSORY TO CC1 (L1) AND CC1 (L2).
6. COMPRESSOR MOTOR THERMALLY PROTECTED. ALL 3 PHASE MODELS ARE PROTECTED UNDER PRIMARY SINGLE PHASE CONDITIONS.
7. TRANSFORMER FACTORY WIRED AS SHOWN BELOW. CHANGE PRIMARY VOLTAGE CONNECTIONS FOR ALTERNATE VOLTAGES, IF REQUIRED.

UNIT VOLTAGES - HZ	TRANSFORMER TERM.
200-220 - 50HZ	200
208 - 60HZ	230
230 - 60HZ	230
380 - 60HZ	400
380-415 - 50HZ	400
460 - 60HZ	460
575 - 60HZ	575

8. LOW VOLTAGE CIRCUIT IS N.E.C. CLASS 2 WITH A CLASS 2 TRANSFORMER, 24VAC, 50/60 HZ SUPPLIED.
9. MOTOR FACTORY WIRED FOR CORRECT VOLTAGE.
10. REMOVE PL24 FOR ECONOMIZER ACCESSORY. PL22 AND PL24 LOCATED IN RETURN AIR SECTION.

COMPONENT CODES

BC	BLOWER CONTACTOR
CA	COMFORT ALERT MODULE
CC	COMPRESSOR CONTACTOR
CCH	CRANKCASE HEATER
CDS	CLOGGED DRAIN SENSOR
CFS	CLOGGED FILTER SWITCH
COMP	COMPRESSOR
CT	CONTROL TRANSFORMER
DAT	DISCHARGE AIR SENSOR
DISC	DISCONNECT SWITCH
FLMS	FLAME SENSOR
FP	FAN PROVING
FS	FREEZE SENSOR
GFCO	GROUND FAULT CONVENIENCE OUTLET
GL	GROUND LUG
GND	GROUND
GV	GAS VALVE
HPC	HIGH PRESSURE CONTROL
IBM	INDOOR BLOWER MOTOR
IDM	INDUCED DRAFT MOTOR
IFC	INTEGRATED FURNACE CONTROL
LAC	LOW AMBIENT CONTROL
LPC	LOW PRESSURE CONTROL
MAS	MIXED AIR SENSOR
MLC	MAIN LIMIT CONTROL
MRLC	MANUAL RESET LIMIT CONTROL
NPC	NEGATIVE PRESSURE SWITCH
OAT	OUTSIDE AIR SENSOR
OFM	OUTDOOR FAN MOTOR
PL	PLUG
PT	POWER TRANSFORMER
RAT	RETURN AIR SENSOR
RC	RUN CAPACITOR
RTU-C	ROOFTOP UNIT CONTROL
SE	SPARK ELECTRODE
US	UNLOADER SOLENOID

WIRE COLOR CODE

BK.....BLACK	G.....GREEN	PR.....PURPLE
BR.....BROWN	G Y .....GRAY	R.....RED
BL.....BLUE	O.....ORANGE	W .....WHITE
		Y.....YELLOW

ELECTRICAL WIRING SCHEMATIC

GE DDC 2 STG 150
575V 3PH, 60HZ

APPROVED:	CHECKED:	ORIGINAL RELEASE NO.:
MODELED BY: JHB	DATE: 03-19-18	R-1071S208
PART NO.: 90-106178-16		REV: 00

FIGURE 49

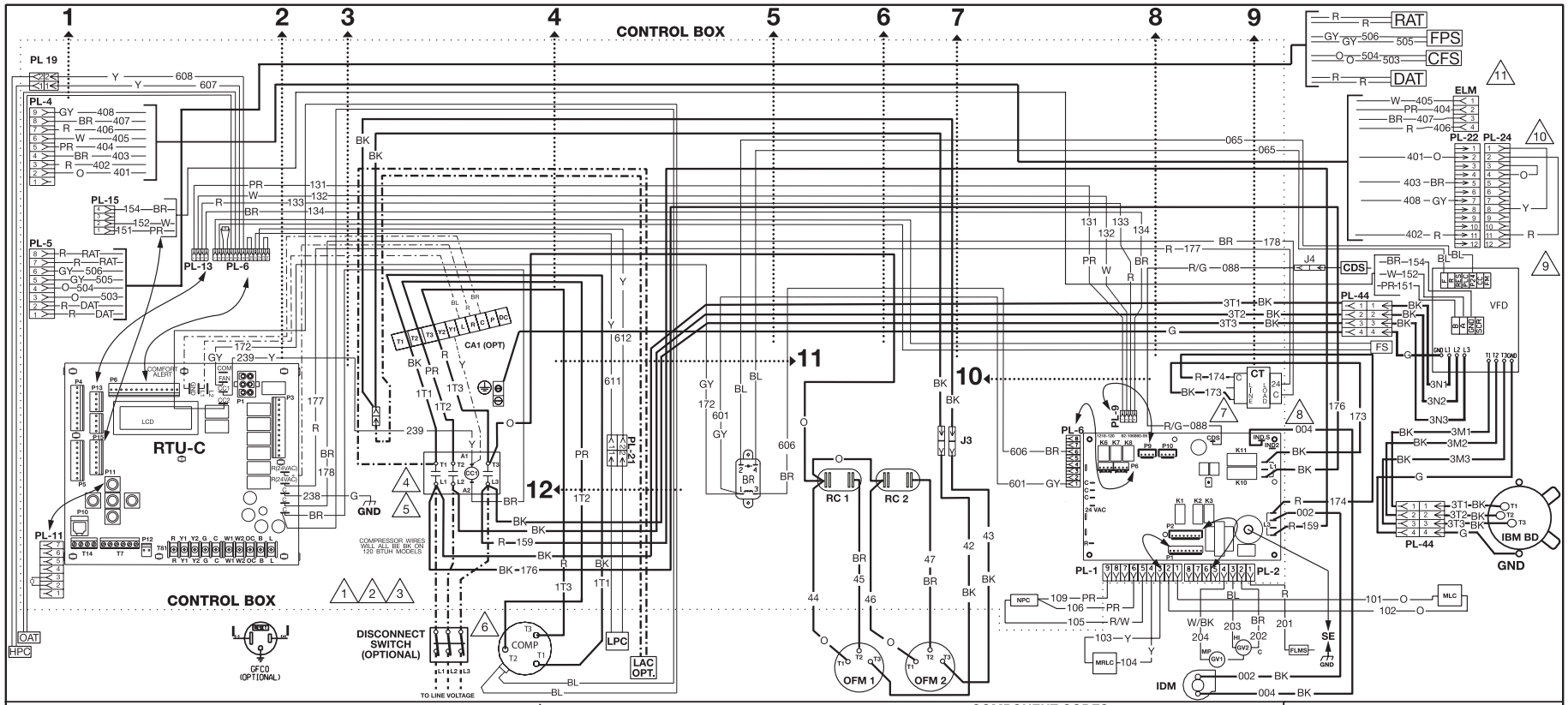

WIRING INFORMATION

LINE VOLTAGE
-FACTORY STANDARD
-FACTORY OPTION
-FIELD INSTALLED

LOW VOLTAGE
-FACTORY STANDARD
-FACTORY OPTION
-FIELD INSTALLED

REPLACEMENT WIRE
-MUST BE THE SAME SIZE AND TYPE OF INSULATION AS ORIGINAL (105°C.MIN.)

WARNING
-CABINET MUST BE PERMANENTLY GROUNDED AND CONFORM TO I.E.C., N.E.C., C.E.C., NATIONAL WIRING REGULATIONS, AND LOCAL CODES AS APPLICABLE.

NOTES

1. CONNECTORS SUITABLE FOR USE WITH COPPER CONDUCTORS ONLY.
2. CONNECT FIELD WIRING IN GROUNDED RAIN TIGHT CONDUIT TO FUSED DISCONNECT.
3. CONNECT FIELD WIRE TO COMPRESSOR CONTACTOR (CC1).
4. REMOVE J3 AT (CC1) TO INSTALL LOW AMBIENT ACCESSORY.
5. IF REQUIRED, ATTACH CRANKCASE HEATER ACCESSORY TO CC1 (L1) AND CC1 (L2).
6. COMPRESSOR MOTOR THERMALLY PROTECTED. ALL 3 PHASE MODELS ARE PROTECTED UNDER PRIMARY SINGLE PHASE CONDITIONS.
7. TRANSFORMER FACTORY WIRED AS SHOWN BELOW. CHANGE PRIMARY VOLTAGE CONNECTION FOR ALTERNATE VOLTAGES, IF REQUIRED.

UNIT VOLTAGES –HZ	TRANSFORMER TERM.
200-220 –50 HZ	200
208 –60 HZ	230
230 –60 HZ	230
380 –60 HZ	400
380-415 -50 HZ	400
460 –60 HZ	460
575 -60 HZ	230

8. LOW VOLTAGE CIRCUIT IS N.E.C. CLASS 2 WITH A CLASS 2 TRANSFORMER, 24VAC 50/60 HZ SUPPLIED.
9. MOTOR FACTORY WIRED FOR CORRECT VOLTAGE.
10. REMOVE PL24 FOR ECONOMIZER ACCESSORY. PL22 AND PL24 LOCATED IN RETURN AIR SECTION.
11. CONNECT TO ECONOMIZER LOGIC MODULE.

COMPONENT CODES

BC	BLOWER CONTACTOR
CA	COMFORT ALERT MODULE
CC	COMPRESSOR CONTACTOR
CCH	CRANKCASE HEATER
CDS	CLOG DRAIN SENSOR
CFS	CLOGGED FILTER SWITCH
COMP	COMPRESSOR
CT	CONTROL TRANSFORMER
DAT	DISCHARGE AIR SENSOR
DISC	DISCONNECT SWITCH
ELM	ECONOMIZER LOGIC MODULE
FLMS	FLAME SENSOR
FP	FAN PROVING SWITCH
FS	FREEZE SENSOR
FT	FREEZE STAT
GFCO	GROUND FAULT CONVENIENCE OUTLET
GL	GROUND LUG
GND	GROUND
GV	GAS VALVE
HPC	HIGH PRESSURE CONTROL
IBM	INDOOR BLOWER MOTOR
IDM	INDUCED DRAFT MOTOR
IFC	INTEGRATED FURNACE CONTROL
J	JUMPER
LAC	LOW AMBIENT CONTROL
LPC	LOW PRESSURE CONTROL
MLC	MAIN LIMIT CONTROL
MRLC	MANUAL RESET LIMIT CONTROL
NPC	NEGATIVE PRESSURE SWITCH
OAT	OUTSIDE AIR SENSOR
OFM	OUTDOOR FAN MOTOR
PL	PLUG
PT	POWER TRANSFORMER
RAT	RETURN AIR SENSOR
RC	RUN CAPACITOR
RTU-C	ROOFTOP UNIT CONTROL
SE	SPARK ELECTRODE
US	UNLOADER SOLENOID
VFD	VARIABLE FREQUENCY DRIVE
##	WIRE TIES

WIRE COLOR CODE

BK.....BLACK	G.....GREEN	PR.....PURPLE
BR.....BROWN	GY.....GRAY	R.....RED
BL.....BLUE	O.....ORANGE	W.....WHITE
		Y.....YELLOW

ELECTRICAL WIRING DIAGRAM

GE DDC 2-STG VFD 090/102/120
208/230/380/460V, 3PH, 60HZ

GE DDC 2-STG VFD 072/090/102
380-415V, 3PH, 50HZ

APPROVED:		CHECKED:	ORIGINAL RELEASE NO.:
MODELED BY: TCJW		DATE: 12-04-17	R-1071S126
PART NO.: 90-106177-17			REV: 00

FIGURE 50

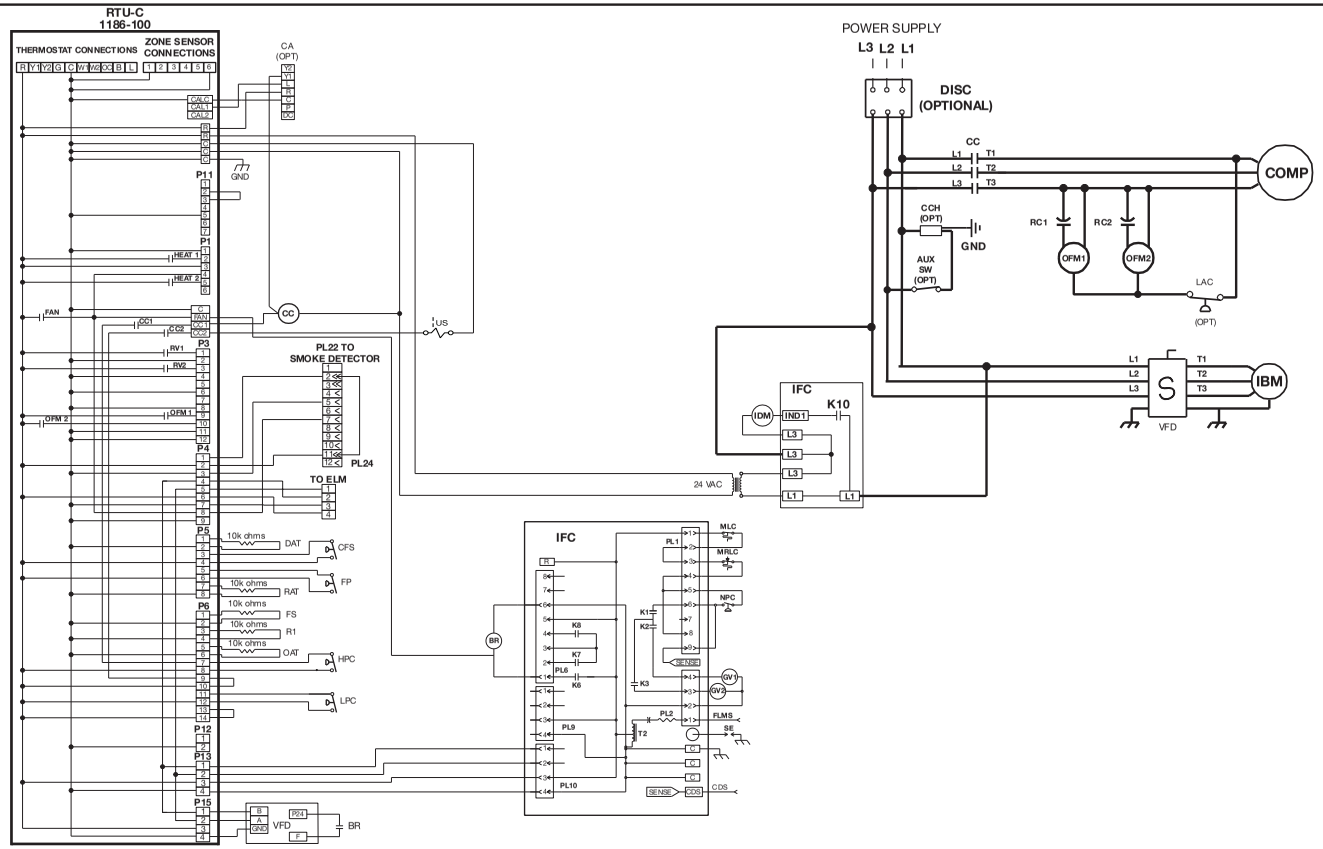

ALARM CODES

CODE	Description	FAULT LEVEL –0,1,2,3*
0	STANDBY	0
c	COMPRESSOR ON – Low (Flashing if in time delay)	0
C	COMPRESSOR ON – High (Flashing if in time delay)	0
E	Economizer Cooling – No Compressor	0
F	CONTINUOUS FAN	0
h	HEAT ON – Low Stage	0
H	GAS HEAT ON – High Stage	0
4	Comfort Alert Code 4 for Compressor Circuit 1	3
5	Comfort Alert Code 5 for Compressor Circuit 1	3
6	Comfort Alert Code 6 for Compressor Circuit 1	3
7	Comfort Alert Code 7 for Compressor Circuit 1	3
8	Comfort Alert Code 8 for Compressor Circuit 1	3
9	Comfort Alert Code 9 for Compressor Circuit 1	3
11	FAILED IGNITION	2
12	LO FLAME SENSE	1
13	FLAME LOST	2
14	UNEXPECTED FLAME	3
15	2nd Stage Gas valve improper voltage	2
20	REFRIGERANT LOW PRESSURE SWITCH OPEN – CIRCUIT 1	2
21	REFRIGERANT LOW PRESSURE SWITCH OPEN – CIRCUIT 2	2
22	MAIN LIMIT OPEN	2
29	REFRIGERANT HIGH PRESSURE SWITCH OPEN – CIRCUIT 1	2
30	REFRIGERANT HIGH PRESSURE SWITCH OPEN – CIRCUIT 2	2
33	MRLC (Rollout Limit) OPEN	2
34	Comfort Alert Code 4 for Compressor Circuit 2	3
35	Comfort Alert Code 5 for Compressor Circuit 2	3
36	Comfort Alert Code 6 for Compressor Circuit 2	3
37	Comfort Alert Code 7 for Compressor Circuit 2	3
38	Comfort Alert Code 8 for Compressor Circuit 2	3
39	Comfort Alert Code 9 for Compressor Circuit 2	3
42	Invalid Thermostat Selection	1
44	1st Stage COMBUSTION PRESS SWITCH CLOSED	2
46	1st Stage COMBUSTION PRESS SWITCH OPEN	2
49	FREEZE SWITCH OPEN – CIRCUIT 1	2
50	FREEZE SWITCH OPEN -CIRCUIT 2	2
55	2nd Stage COMBUSTION PRESS SWITCH CLOSED	2
57	2nd Stage COMBUSTION PRESS SWITCH OPEN	2,3
59	Condensate Drain Plugged	3
61	Blower Fault – NO RUN	3
83	Condenser Coil Temp Sensor Fail-OCT	2
84	Outdoor Air Temperature Sensor Fail-OAT	2
88	Emergency Stop Fault	3
93	CONTROL Fault	3
97	Smoke Detection	3

*Fault levels: 0 = none, 1=warning, 2= problem, 3=shutdown

WIRING INFORMATION

LINE VOLTAGE
-FACTORY STANDARD
-FACTORY OPTION
-FIELD INSTALLED

LOW VOLTAGE
-FACTORY STANDARD
-FACTORY OPTION
-FIELD INSTALLED

REPLACEMENT WIRE
-MUST BE THE SAME SIZE AND TYPE OF INSULATION AS ORIGINAL (105ºC MIN.)

WARNING
-CABINET MUST BE PERMANENTLY GROUNDED AND CONFORM TO I.E.C., N.E.C., C.E.C., NATIONAL WIRING REGULATIONS, AND LOCAL CODES AS APPLICABLE.

NOTES

1. CONNECTORS SUITABLE FOR USE WITH COPPER CONDUCTORS ONLY.
2. CONNECT FIELD WIRING IN GROUNDED RAIN TIGHT CONDUIT TO FUSED DISCONNECT.
3. CONNECT FIELD WIRE TO COMPRESSOR CONTACTOR (CC1).
4. REMOVE J3 AT (CC1) TO INSTALL LOW AMBIENT ACCESSORY.
5. IF REQUIRED, ATTACH CRANKCASE HEATER ACCESSORY TO CC1 (L1) AND CC1 (L2).
6. COMPRESSOR MOTOR THERMALLY PROTECTED. ALL 3 PHASE MODELS ARE PROTECTED UNDER PRIMARY SINGLE PHASE CONDITIONS.
7. TRANSFORMER FACTORY WIRED AS SHOWN BELOW. CHANGE PRIMARY VOLTAGE CONNECTIONS FOR ALTERNATE VOLTAGES, IF REQUIRED.

UNIT VOLTAGES - HZ	TRANSFORMER TERM.
200-220 - 50HZ	200
208 - 60HZ	230
230 - 60HZ	230
380 - 60HZ	400
380-415 - 50HZ	400
460 - 60HZ	460
575 - 60HZ	230

8. LOW VOLTAGE CIRCUIT IS N.E.C. CLASS 2 WITH A CLASS 2 TRANSFORMER, 24VAC, 50/60 HZ SUPPLIED.
9. MOTOR FACTORY WIRED FOR CORRECT VOLTAGE.
10. REMOVE PL24 FOR ECONOMIZER ACCESSORY. PL22 AND PL24 LOCATED IN RETURN AIR SECTION.

COMPONENT CODES

BR	BLOWER RELAY
CA	COMFORT ALERT MODULE
CC	COMPRESSOR CONTACTOR
CCH	CRANKCASE HEATER
CDS	CLOGGED DRAIN SENSOR
CFS	CLOGGED FILTER SWITCH
COMP	COMPRESSOR
CT	CONTROL TRANSFORMER
DAT	DISCHARGE AIR SENSOR
DISC	DISCONNECT SWITCH
FLMS	FLAME SENSOR
FP	FAN PROVING
FS	FREEZE SENSOR
GFCO	GROUND FAULT CONVENIENCE OUTLET
GL	GROUND LUG
GND	GROUND
GV	GAS VALVE
HPC	HIGH PRESSURE CONTROL
IBM	INDOOR BLOWER MOTOR
IDM	INDUCED DRAFT MOTOR
IFC	INTEGRATED FURNACE CONTROL
LAC	LOW AMBIENT CONTROL
LPC	LOW PRESSURE CONTROL
MAS	MIXED AIR SENSOR
MLC	MAIN LIMIT CONTROL
MRLC	MANUAL RESET LIMIT CONTROL
NPC	NEGATIVE PRESSURE SWITCH
OAT	OUTSIDE AIR SENSOR
OFM	OUTDOOR FAN MOTOR
PL	PLUG
PT	POWER TRANSFORMER
RAT	RETURN AIR SENSOR
RC	RUN CAPACITOR
RTU-C	ROOFTOP UNIT CONTROL
SE	SPARK ELECTRODE
US	UNLOADER SOLENOID
VFD	VARIABLE FREQUENCY DRIVE

WIRE COLOR CODE

BK.....BLACK	G.....GREEN	PR.....PURPLE
BR.....BROWN	GY.....GRAY	R.....RED
BL.....BLUE	O.....ORANGE	W .....WHITE
		Y.....YELLOW

ELECTRICAL WIRING SCHEMATIC

GE DDC 2 STG VFD 090/102/120
208/230/380/460V, 3PH, 60HZ

GE DDC 2 STG 072/090/102
380-415V, 3PH, 50HZ

APPROVED:	CHECKED:	ORIGINAL RELEASE NO.:
MODELED BY: TEW	DATE: 12-06-17	R-1071S126
PART NO.: 90-106178-17		REV: 01

FIGURE 51

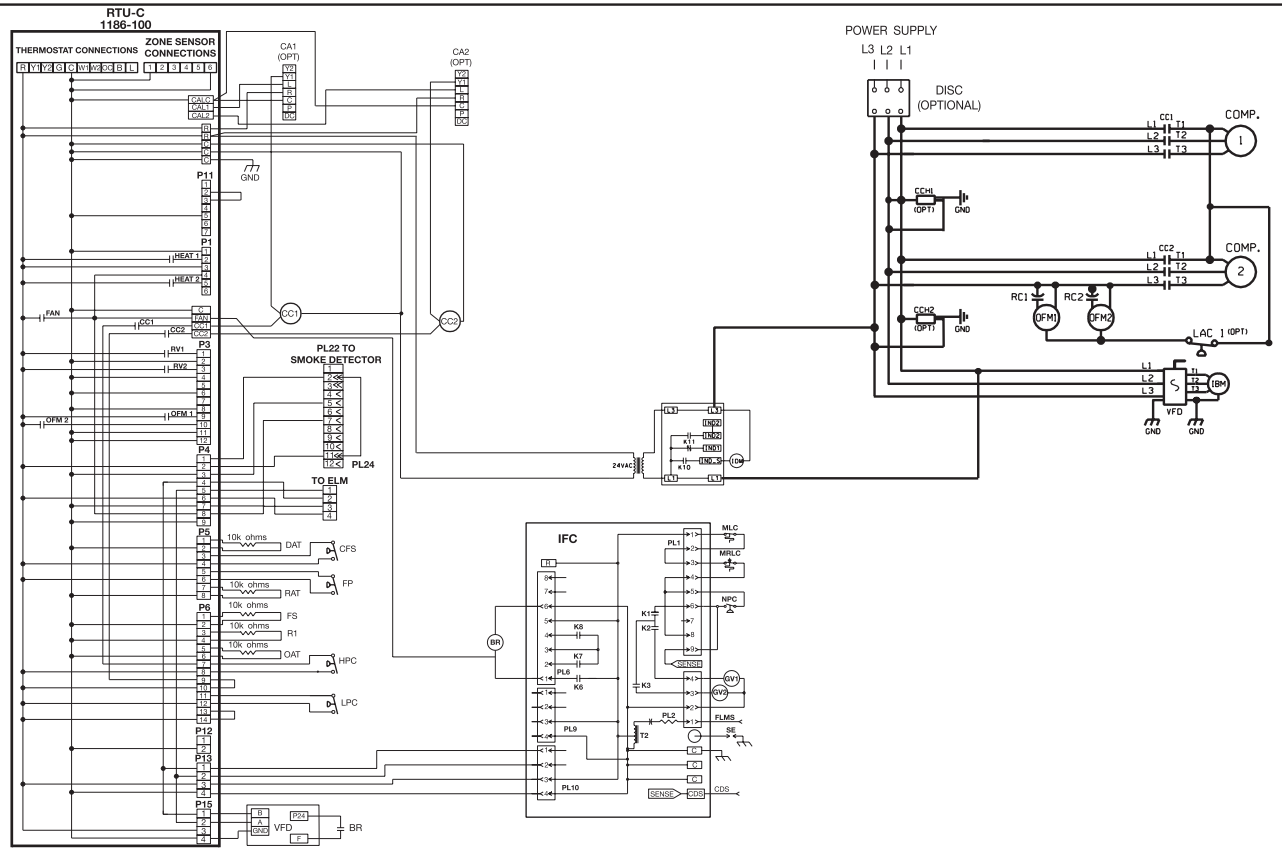

ALARM CODES

CODE	Description	FAULT LEVEL –0,1,2,3*
0	STANDBY	0
c	COMPRESSOR ON – Low (Flashing if in time delay)	0
C	COMPRESSOR ON – High (Flashing if in time delay)	0
E	Economizer Cooling – No Compressor	0
F	CONTINUOUS FAN	0
h	HEAT ON – Low Stage	0
H	GAS HEAT ON – High Stage	0
4	Comfort Alert Code 4 for Compressor Circuit 1	3
5	Comfort Alert Code 5 for Compressor Circuit 1	3
6	Comfort Alert Code 6 for Compressor Circuit 1	3
7	Comfort Alert Code 7 for Compressor Circuit 1	3
8	Comfort Alert Code 8 for Compressor Circuit 1	3
9	Comfort Alert Code 9 for Compressor Circuit 1	3
11	FAILED IGNITION	2
12	LO FLAME SENSE	1
13	FLAME LOST	2
14	UNEXPECTED FLAME	3
15	2nd Stage Gas valve improper voltage	2
20	REFRIGERANT LOW PRESSURE SWITCH OPEN – CIRCUIT 1	2
21	REFRIGERANT LOW PRESSURE SWITCH OPEN – CIRCUIT 2	2
22	MAIN LIMIT OPEN	2
29	REFRIGERANT HIGH PRESSURE SWITCH OPEN – CIRCUIT 1	2
30	REFRIGERANT HIGH PRESSURE SWITCH OPEN – CIRCUIT 2	2
33	MRLC (Rollout Limit) OPEN	2
34	Comfort Alert Code 4 for Compressor Circuit 2	3
35	Comfort Alert Code 5 for Compressor Circuit 2	3
36	Comfort Alert Code 6 for Compressor Circuit 2	3
37	Comfort Alert Code 7 for Compressor Circuit 2	3
38	Comfort Alert Code 8 for Compressor Circuit 2	3
39	Comfort Alert Code 9 for Compressor Circuit 2	3
42	Invalid Thermostat Selection	1
44	1st Stage COMBUSTION PRESS SWITCH CLOSED	2
46	1st Stage COMBUSTION PRESS SWITCH OPEN	2
49	FREEZE SWITCH OPEN – CIRCUIT 1	2
50	FREEZE SWITCH OPEN -CIRCUIT 2	2
55	2nd Stage COMBUSTION PRESS SWITCH CLOSED	2
57	2nd Stage COMBUSTION PRESS SWITCH OPEN	2,3
59	Condensate Drain Plugged	3
61	Blower Fault – NO RUN	3
83	Condenser Coil Temp Sensor Fail-OCT	2
84	Outdoor Air Temperature Sensor Fail-OAT	2
88	Emergency Stop Fault	3
93	CONTROL Fault	3
97	Smoke Detection	3

*Fault levels:0 = none, 1=warning, 2= problem, 3=shutdown

WIRING INFORMATION

LINE VOLTAGE
- -FACTORY STANDARD
- -FACTORY OPTION
- -FIELD INSTALLED

LOW VOLTAGE
- -FACTORY STANDARD
- -FACTORY OPTION
- -FIELD INSTALLED

REPLACEMENT WIRE
-MUST BE THE SAME SIZE AND TYPE OF INSULATION AS ORIGINAL (105°C MIN.)

WARNING
-CABINET MUST BE PERMANENTLY GROUNDED AND CONFORM TO I.E.C., N.E.C., C.E.C., NATIONAL WIRING REGULATIONS, AND LOCAL CODES AS APPLICABLE.

NOTES

1. CONNECTORS SUITABLE FOR USE WITH COPPER CONDUCTORS ONLY.
2. CONNECT FIELD WIRING IN GROUNDED RAIN TIGHT CONDUIT TO FUSED DISCONNECT.
3. CONNECT FIELD WIRE TO COMPRESSOR CONTACTOR (CC1).
4. REMOVE J3 AT (CC1) TO INSTALL LOW AMBIENT ACCESSORY.
5. IF REQUIRED, ATTACH CRANKCASE HEATER ACCESSORY TO CC1 (L1) AND CC1 (L2).
6. COMPRESSOR MOTOR THERMALLY PROTECTED. ALL 3 PHASE MODELS ARE PROTECTED UNDER PRIMARY SINGLE PHASE CONDITIONS.
7. TRANSFORMER FACTORY WIRED AS SHOWN BELOW. CHANGE PRIMARY VOLTAGE CONNECTIONS FOR ALTERNATE VOLTAGES, IF REQUIRED.

UNIT VOLTAGES - HZ	TRANSFORMER TERM.
200-220 - 50HZ	200
208 - 60HZ	230
230 - 60HZ	230
380 - 60HZ	400
380-415 - 50HZ	400
460 - 60HZ	460
575 - 60HZ	230

8. LOW VOLTAGE CIRCUIT IS N.E.C. CLASS 2 WITH A CLASS 2 TRANSFORMER, 24VAC, 50/60 HZ SUPPLIED.
9. MOTOR FACTORY WIRED FOR CORRECT VOLTAGE.
10. REMOVE PL24 FOR ECONOMIZER ACCESSORY. PL22 AND PL24 LOCATED IN RETURN AIR SECTION.

COMPONENT CODES

BR	BLOWER RELAY
CA	COMFORT ALERT MODULE
CC	COMPRESSOR CONTACTOR
CCH	CRANKCASE HEATER
CDS	CLOGGED DRAIN SENSOR
CFS	CLOGGED FILTER SWITCH
COMP	COMPRESSOR
CT	CONTROL TRANSFORMER
DAT	DISCHARGE AIR SENSOR
DISC	DISCONNECT SWITCH
FLMS	FLAME SENSOR
FP	FAN PROVING
FS	FREEZE SENSOR
GFCO	GROUND FAULT CONVENIENCE OUTLET
GL	GROUND LUG
GND	GROUND
GV	GAS VALVE
HPC	HIGH PRESSURE CONTROL
IBM	INDOOR BLOWER MOTOR
IDM	INDUCED DRAFT MOTOR
IFC	INTEGRATED FURNACE CONTROL
LAC	LOW AMBIENT CONTROL
LPC	LOW PRESSURE CONTROL
MAS	MIXED AIR SENSOR
MLC	MAIN LIMIT CONTROL
MRLC	MANUAL RESET LIMIT CONTROL
NPC	NEGATIVE PRESSURE SWITCH
OAT	OUTSIDE AIR SENSOR
OFM	OUTDOOR FAN MOTOR
PL	PLUG
PT	POWER TRANSFORMER
RAT	RETURN AIR SENSOR
RC	RUN CAPACITOR
RTU-C	ROOFTOP UNIT CONTROL
SE	SPARK ELECTRODE
US	UNLOADER SOLENOID
VFD	VARIABLE FREQUENCY DRIVE

WIRE COLOR CODE

BK.....BLACK	G.....GREEN	PR.....PURPLE
BR.....BROWN	GY.....GRAY	R.....RED
BL.....BLUE	O.....ORANGE	W .....WHITE
		Y.....YELLOW

ELECTRICAL WIRING SCHEMATIC

GE DDC 2 STG VFD 150
208/230/380/460V, 3PH, 60HZ

GE DDC 2 STG 120
380-415V, 3PH, 50HZ

APPROVED:	CHECKED:	ORIGINAL RELEASE NO.:
MODELED BY: JHB	DATE: 3-19-18	R-1071S208
PART NO.: 90-106178-19		REV: 00

FIGURE 52

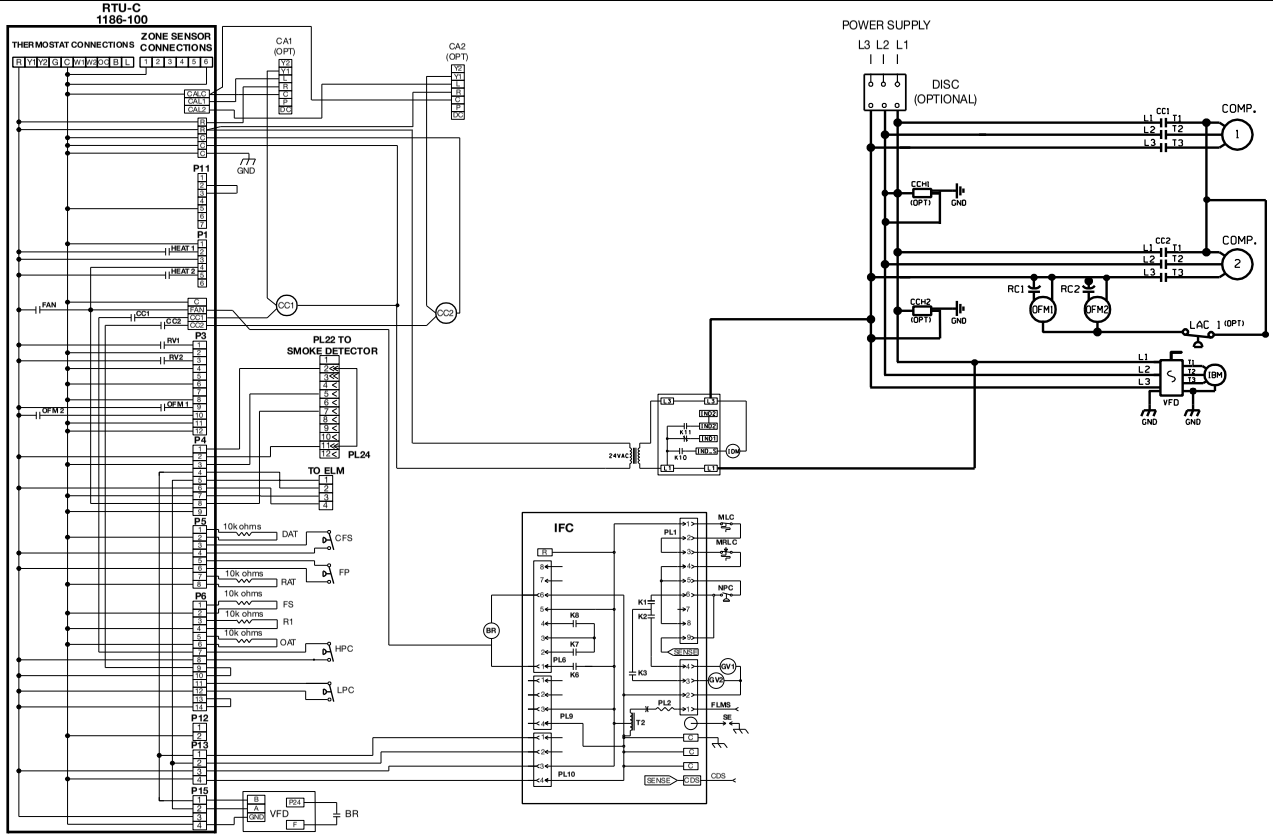

ALARM CODES

CODE	Description	FAULT LEVEL –0,1,2,3*
0	STANDBY	0
c	COMPRESSOR ON – Low (Flashing if in time delay)	0
C	COMPRESSOR ON – High (Flashing if in time delay)	0
E	Economizer Cooling – No Compressor	0
F	CONTINUOUS FAN	0
h	HEAT ON – Low Stage	0
H	GAS HEAT ON – High Stage	0
4	Comfort Alert Code 4 for Compressor Circuit 1	3
5	Comfort Alert Code 5 for Compressor Circuit 1	3
6	Comfort Alert Code 6 for Compressor Circuit 1	3
7	Comfort Alert Code 7 for Compressor Circuit 1	3
8	Comfort Alert Code 8 for Compressor Circuit 1	3
9	Comfort Alert Code 9 for Compressor Circuit 1	3
11	FAILED IGNITION	2
12	LO FLAME SENSE	1
13	FLAME LOST	2
14	UNEXPECTED FLAME	3
15	2nd Stage Gas valve improper voltage	2
20	REFRIGERANT LOW PRESSURE SWITCH OPEN – CIRCUIT 1	2
21	REFRIGERANT LOW PRESSURE SWITCH OPEN – CIRCUIT 2	2
22	MAIN LIMIT OPEN	2
29	REFRIGERANT HIGH PRESSURE SWITCH OPEN – CIRCUIT 1	2
30	REFRIGERANT HIGH PRESSURE SWITCH OPEN – CIRCUIT 2	2
33	MRLC (Rollout Limit) OPEN	2
34	Comfort Alert Code 4 for Compressor Circuit 2	3
35	Comfort Alert Code 5 for Compressor Circuit 2	3
36	Comfort Alert Code 6 for Compressor Circuit 2	3
37	Comfort Alert Code 7 for Compressor Circuit 2	3
38	Comfort Alert Code 8 for Compressor Circuit 2	3
39	Comfort Alert Code 9 for Compressor Circuit 2	3
42	Invalid Thermostat Selection	1
44	1st Stage COMBUSTION PRESS SWITCH CLOSED	2
46	1st Stage COMBUSTION PRESS SWITCH OPEN	2
49	FREEZE SWITCH OPEN – CIRCUIT 1	2
50	FREEZE SWITCH OPEN -CIRCUIT 2	2
55	2nd Stage COMBUSTION PRESS SWITCH CLOSED	2
57	2nd Stage COMBUSTION PRESS SWITCH OPEN	2,3
59	Condensate Drain Plugged	3
61	Blower Fault – NO RUN	3
83	Condenser Coil Temp Sensor Fail-OCT	2
84	Outdoor Air Temperature Sensor Fail-OAT	2
88	Emergency Stop Fault	3
93	CONTROL Fault	3
97	Smoke Detection	3

*Fault levels:0 = none, 1=warning, 2= problem, 3=shutdown

WIRING INFORMATION

LINE VOLTAGE
- -FACTORY STANDARD
- -FACTORY OPTION
- -FIELD INSTALLED

LOW VOLTAGE
- -FACTORY STANDARD
- -FACTORY OPTION
- -FIELD INSTALLED

REPLACEMENT WIRE
-MUST BE THE SAME SIZE AND TYPE OF INSULATION AS ORIGINAL (105°C MIN.)

WARNING
-CABINET MUST BE PERMANENTLY GROUNDED AND CONFORM TO I.E.C., N.E.C., C.E.C., NATIONAL WIRING REGULATIONS, AND LOCAL CODES AS APPLICABLE.

NOTES

1. CONNECTORS SUITABLE FOR USE WITH COPPER CONDUCTORS ONLY.
2. CONNECT FIELD WIRING IN GROUNDED RAIN TIGHT CONDUIT TO FUSED DISCONNECT.
3. CONNECT FIELD WIRE TO COMPRESSOR CONTACTOR (CC1).
4. REMOVE J3 AT (CC1) TO INSTALL LOW AMBIENT ACCESSORY.
5. IF REQUIRED, ATTACH CRANKCASE HEATER ACCESSORY TO CC1 (L1) AND CC1 (L2).
6. COMPRESSOR MOTOR THERMALLY PROTECTED. ALL 3 PHASE MODELS ARE PROTECTED UNDER PRIMARY SINGLE PHASE CONDITIONS.
7. TRANSFORMER FACTORY WIRED AS SHOWN BELOW. CHANGE PRIMARY VOLTAGE CONNECTIONS FOR ALTERNATE VOLTAGES, IF REQUIRED.

UNIT VOLTAGES - HZ	TRANSFORMER TERM.
200-220 - 50HZ	200
208 - 60HZ	230
230 - 60HZ	230
380 - 60HZ	400
380-415 - 50HZ	400
460 - 60HZ	460
575 - 60HZ	230

8. LOW VOLTAGE CIRCUIT IS N.E.C. CLASS 2 WITH A CLASS 2 TRANSFORMER, 24VAC, 50/60 HZ SUPPLIED.
9. MOTOR FACTORY WIRED FOR CORRECT VOLTAGE.
10. REMOVE PL24 FOR ECONOMIZER ACCESSORY. PL22 AND PL24 LOCATED IN RETURN AIR SECTION.

COMPONENT CODES

BR	BLOWER RELAY
CA	COMFORT ALERT MODULE
CC	COMPRESSOR CONTACTOR
CCH	CRANKCASE HEATER
CDS	CLOGGED DRAIN SENSOR
CFS	CLOGGED FILTER SWITCH
COMP	COMPRESSOR
CT	CONTROL TRANSFORMER
DAT	DISCHARGE AIR SENSOR
DISC	DISCONNECT SWITCH
FLMS	FLAME SENSOR
FP	FAN PROVING
FS	FREEZE SENSOR
GFCO	GROUND FAULT CONVENIENCE OUTLET
GL	GROUND LUG
GND	GROUND
GV	GAS VALVE
HPC	HIGH PRESSURE CONTROL
IBM	INDOOR BLOWER MOTOR
IDM	INDUCED DRAFT MOTOR
IFC	INTEGRATED FURNACE CONTROL
LAC	LOW AMBIENT CONTROL
LPC	LOW PRESSURE CONTROL
MAS	MIXED AIR SENSOR
MLC	MAIN LIMIT CONTROL
MRLC	MANUAL RESET LIMIT CONTROL
NPC	NEGATIVE PRESSURE SWITCH
OAT	OUTSIDE AIR SENSOR
OFM	OUTDOOR FAN MOTOR
PL	PLUG
PT	POWER TRANSFORMER
RAT	RETURN AIR SENSOR
RC	RUN CAPACITOR
RTU-C	ROOFTOP UNIT CONTROL
S/E	SPARK ELECTRODE
US	UNLOADER SOLENOID
VFD	VARIABLE FREQUENCY DRIVE

WIRE COLOR CODE

BK.....BLACK	G.....GREEN	PR.....PURPLE
BR.....BROWN	GY.....GRAY	R.....RED
BL.....BLUE	O.....ORANGE	W .....WHITE
		Y .....YELLOW

ELECTRICAL WIRING SCHEMATIC

GE DDC 2 STG VFD 150
208/230/380/460V, 3PH, 60HZ

GE DDC 2 STG 120
380-415V, 3PH, 50HZ

APPROVED:	CHECKED:	ORIGINAL RELEASE NO.:
MODELED BY: JHB	DATE: 3-19-18	R-1071S208
PART NO.: 90-106178-19		REV: 00

In keeping with its policy of continuous progress and product improvement, Rheem reserves the right to make changes without notice.

Rheem Heating, Cooling & Water Heating • P.O. Box 17010
Fort Smith, Arkansas 72917 • www.rheem.com

Rheem Canada Ltd./Ltée • 125 Edgeware Road, Unit 1
Brampton, Ontario L6Y 0P5