USER'S INFORMATION MANUAL

FOR YOUR COMBINATION GAS HEATING/ ELECTRIC COOLING AIR CONDITIONING UNIT

⚠ WARNING

If the information in this manual is not followed exactly, a fire or explosion may result, causing property damage, personal injury or loss of life.

⚠ WARNING

FIRE OR EXPLOSION HAZARD

Failure to follow safety warnings exactly could result in serious injury, death or property damage.

— **Do not store or use gasoline or other flammable vapors and liquids, or other combustible materials in the vicinity of this or any other appliance.**

— **WHAT TO DO IF YOU SMELL GAS**

- **Do not try to light any appliance.**
- **Do not touch any electrical switch; do not use any phone in your building.**
- **Immediately call your gas supplier from a neighbor's phone. Follow the gas supplier's instructions.**
- **If you cannot reach your gas supplier, call the fire department.**
- **Do not return to your home until authorized by the gas supplier or fire department.**

— **DO NOT RELY ON SMELL ALONE TO DETECT LEAKS. DUE TO VARIOUS FACTORS, YOU MAY NOT BE ABLE TO SMELL FUEL GASES.**

- **U.L. and/or C.S.A. recognized fuel gas and CO (carbon monoxide) detectors are recommended in all applications, and their installation should be in accordance with the manufacturer's recommendations and/or local laws, rules, regulations, or customs.**

— **Improper installation, adjustment, alteration, service or maintenance can cause injury, property damage or death. Refer to this manual. Installation and service must be performed by a qualified installer, service agency or the gas supplier. In the commonwealth of Massachusetts, installation must be performed by a licensed plumber or gas filter for appropriate fuel.**

⚠ WARNING

PROPOSITION 65: THIS FURNACE CONTAINS FIBERGLASS INSULATION. RESPIRABLE PARTICLES OF FIBERGLASS ARE KNOWN TO THE STATE OF CALIFORNIA TO CAUSE CANCER. EXHAUST GAS FROM THIS FURNACE CONTAINS CHEMICALS, INCLUDING CARBON MONOXIDE, KNOWN TO THE STATE OF CALIFORNIA TO CAUSE BIRTH DEFECTS OR OTHER REPRODUCTIVE HARM.

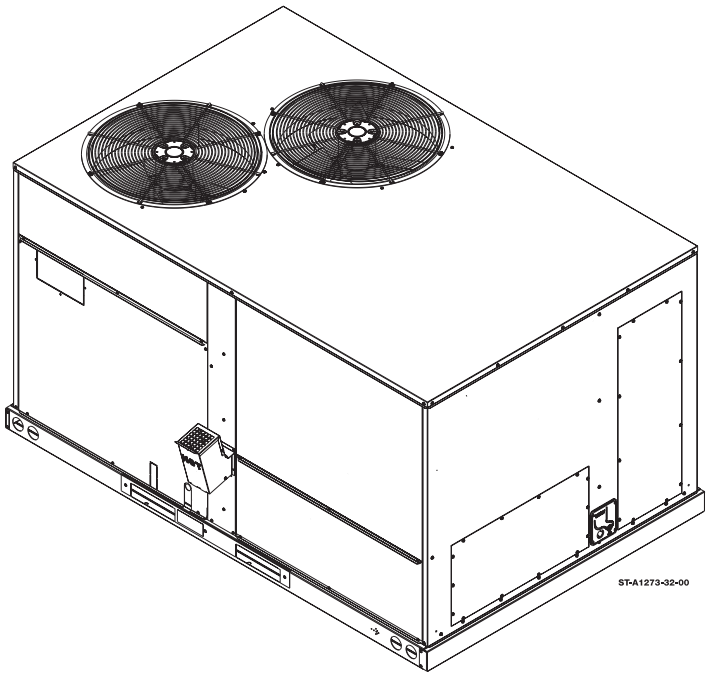

7.5 THRU 12½ TON MODELS

Accredited by the RvA

ABS Quality Evaluations, Inc. Management System Certification

ANAB ACCREDITED

ISO 9001:2015

Certificate Number: 30164

DO NOT DESTROY. PLEASE READ CAREFULLY AND KEEP IN A SAFE PLACE FOR FUTURE REFERENCE.

92-106167-01-01
SUPERSEDES 92-106167-01-00

INTRODUCTION

⚠ Recognize this symbol as an indication of Important Safety Information!

SAFETY

Carefully follow these safety rules:

1. The area around the unit must be kept clear and free of all combustible materials including gasoline and other flammable vapors and liquids.
2. Do not block the combustion air inlets or the exhaust air outlet openings.
3. Do not operate the unit without all panels and doors securely in place.

⚠ WARNING

SHOULD OVERHEATING OCCUR OR THE GAS SUPPLY FAIL TO SHUT OFF, SHUT OFF THE MANUAL GAS VALVE TO THE APPLIANCE BEFORE SHUTTING OFF THE ELECTRICAL SUPPLY. FAILURE TO DO SO CAN RESULT IN AN EXPLOSION OR FIRE CAUSING PROPERTY DAMAGE, SEVERE PERSONAL INJURY OR DEATH!

⚠ WARNING

IMPROPER INSTALLATION, ADJUSTMENT, ALTERATION, SERVICE OR MAINTENANCE CAN CAUSE PROPERTY DAMAGE, PERSONAL INJURY OR DEATH. FOR ASSISTANCE OR ADDITIONAL INFORMATION CONSULT A QUALIFIED INSTALLER, SERVICE AGENCY OR THE GAS SUPPLIER.

4. Any additions, changes or conversions required in order for the unit to satisfactorily meet the application needs should be made by a qualified installer, service agency or the gas supplier, using factory specified or approved parts. Read your WARRANTY. Contact the WARRANTOR for conversion information. The unit was equipped at the factory for use on NATURAL GAS ONLY. Conversion to LP GAS requires a special kit supplied by the WARRANTOR.
5. A gas burner needs an adequate supply of combustion and ventilation air for proper and safe operation. Do not block or obstruct air openings on the unit. Do not place anything around the unit that could block the flow of fresh air to the unit.

⚠ WARNING

OBSTRUCTION OF THE AIR VENT ON AN LP TANK REGULATOR CAN CAUSE EXPLOSION OR FIRE RESULTING IN SERIOUS PERSONAL INJURY, DEATH OR PROPERTY DAMAGE. PERIODICALLY INSPECT AND CLEAN THE AIR VENT SCREEN TO PREVENT ANY OBSTRUCTION. KEEP PROTECTIVE REGULATOR COVER IN PLACE, AS EXPOSURE TO THE ELEMENTS CAN CAUSE ICE BUILDUP AND REGULATOR FAILURE.

6. Do not use this unit if any part has been under water. Immediately call a qualified installer, service agency or the gas supplier to inspect the unit and to replace any part of the control system or any gas control that has been under water.

⚠ WARNING

DO NOT ALLOW DEBRIS SUCH AS LEAVES, GRASS, WEEDS, SHRUBS, VINES OR SNOW ACCUMULATE IN THE AREA SURROUNDING THE UNIT, PARTICULARLY IN THE VICINITY OF THE VENT, AIR INTAKE AND A/C CONDENSER FINS. DOING SO CAN RESULT IN INADEQUATE UNIT PERFORMANCE OR CREATE A FIRE HAZARD RESULTING IN PROPERTY DAMAGE, PERSONAL INJURY OR DEATH.

7. The combustion air inlet/exhaust outlet hood and surrounding area are very hot when operating in heating mode. **Do not allow children to play on or around the unit.**
8. Should the gas supply fail to shut off or if overheating occurs, shut off the gas valve to the furnace before shutting off the electrical supply.

SYSTEM OPERATION INFORMATION

Advice to the Customer

1. Keep the filter clean. Your system will operate more efficiently and provide better conditioned air.
2. Arrange your furniture and drapes so that the supply and return air registers and grilles are unobstructed.
3. Close doors and windows. This will reduce the cooling load on your system for a more economical operation.
4. Avoid excessive use of exhaust fans.
5. Window shades and awnings will reduce the cooling load.
6. Do not permit the heat generated by television, lamps or radios to influence the thermostat operation.
7. Except for the mounting platform, keep all combustible articles three feet from the unit and exhaust system.

⚠ WARNING

DUCT LEAKS CAN CREATE AN UNBALANCED SYSTEM AND DRAW POLLUTANTS SUCH AS DIRT, DUST, FUMES AND ODORS INTO THE HOME CAUSING PROPERTY DAMAGE. FUMES AND ODORS FROM TOXIC, VOLATILE OR FLAMMABLE CHEMICALS, AS WELL AS AUTOMOBILE EXHAUST AND CARBON MONOXIDE (CO), CAN BE DRAWN INTO THE LIVING SPACE THROUGH LEAKING DUCTS AND UNBALANCED DUCT SYSTEMS CAUSING PERSONAL INJURY OR DEATH.

IF AIR-MOVING EQUIPMENT OR DUCTWORK IS LOCATED IN SPACES CONTAINING FUEL BURNING APPLIANCES SUCH AS WATER HEATERS OR BOILERS, ALL JOINTS, SEAMS, AND OPENINGS IN THE EQUIPMENT AND DUCT MUST ALSO BE SEALED TO PREVENT DEPRESSURIZATION OF THE SPACE AND POSSIBLE MIGRATION OF COMBUSTION BYPRODUCTS INCLUDING CARBON MONOXIDE INTO THE LIVING SPACE.

⚠NOTICE

IMPROPER INSTALLATION, OR INSTALLATION NOT MADE IN ACCORDANCE WITH THE CSA INTERNATIONAL (CSA) CERTIFICATION OR THESE INSTRUCTIONS, CAN RESULT IN UNSATISFACTORY OPERATION AND/OR DANGEROUS CONDITIONS AND ARE NOT COVERED BY THE UNIT WARRANTY.

8. Unless you plan to remove panels to service the unit, do not disconnect the main power to your unit. This is a safety precaution for the protection of the compressor. Otherwise, use the thermostat switches to shut the system off.
9. For extended periods of inoperation, set the thermostat system switch in the “OFF” position and fan switch in the “AUTO” position.
10. Do not allow the unit to become a play stand for children.
11. ***IMPORTANT:*** *Replace all blower doors and compartment cover after servicing the unit. Do not operate the unit without all panels and doors securely in place.*
12. Do not allow snow or other debris to accumulate in the vicinity of the appliance.

IMPORTANT INFORMATION ABOUT EFFICIENCY AND INDOOR AIR QUALITY

Central cooling and heating equipment is only as efficient as the duct system that carries the cooled or heated air. To maintain efficiency, comfort and good indoor air quality, it is important to have the proper balance between the air being supplied to each room and the air returning to the cooling and heating equipment.

Proper balance and sealing of the duct system improves the efficiency of the heating and air conditioning system and improves the indoor air quality of the occupied space by reducing the amount of airborne pollutants that enter occuplied spaces from spaces where the ductwork and / or equipment is located. The manufacturer and the U.S. Environmental Protection Agency’s Energy Star Program recommend that central duct systems be checked by a qualified contractor for proper balance and sealing.

THERMOSTAT OPERATION

NOTE: The time delays vary depending on how the wires are connected.

For cooling, position the system switch to “Cool” and the fan switch to “Auto.” If constant fan operation is desired, place the fan switch in the “On” position.

When heating is desired, position the system switch to “HEAT” and place the fan switch in the “Auto” position.

During the heating season, the operation of the warm air furnace is automatic. Your installing dealer has provided a wall mounted thermostat which is sensitive to the change in the temperature of the air moving around the thermostat. When the temperature of the air within the heated space surrounding the thermostat decreases, the thermostat switch functions to initiate the ignition sequence and open the gas valve.

The spark ignitor located on the main burner tray will safely ignite the gas (natural or LP) leaving the main burner ports. After a preselected time of burner operation, the blower control will start the blower. Warm air should now gently circulate from the supply diffusers throughout the dwelling and return to the furnace through return air grille(s).

When the temperature of the circulating air reaches the temperature setting of the thermostat, the gas valve will reclose, the heat exchanger will cool, and the blower will shut off after a preselected time.

In the cooling mode, the compressor and circulation air motor are energized upon a call for cooling. When the thermostat is satisfied or turned to the “OFF” position, the compressor is de-energized, but the circulation air blower continues to operate for a preselected time to extract the residual cooling left in the cooling coil.

We suggest that you experiment with **constant air circulation** during the heating and cooling cycles. To achieve this style of operation, place the fan switch on the thermostat subbase to the “on” position. You may enjoy the comfort associated with the continuous air movement, constant air filtration, and the near even temperature from floor to ceiling.

With continuous air circulation, some condensation on the cooling coil can reevaporate at the end of each cycle and cause a buildup of humidity prior to the next cooling cycle.

SELECTION OF ROOM TEMPERATURE

It is most important to select the comfort temperature you desire for either heating or cooling by use of the thermostat temperature selector.

DO NOT PLAY WITH THE THERMOSTAT. SET IT AND FORGET IT.

If the temperature selection procedure is new to you, ask your installing contractor to familiarize you with the operation of the thermostat.

⚠WARNING

CARBON MONOXIDE (CO) IS A COLORLESS, ODORLESS, POISONOUS GAS THAT CAN CAUSE SEVERE PERSONAL INJURY OR DEATH. CARBON MONOXIDE CAN BE PRODUCED BY ANY FUEL-BURNING DEVICE.

CARBON MONOXIDE FROM ANY FUEL BURNING DEVICES CAN BE INADVERTENTLY DRAWN INTO AND DISTRIBUTED THROUGH THE LIVING SPACE BY THE NORMAL OPERATION OF THE CENTRAL HEATING / AIR CONDITIONING SYSTEM.

APPLIANCES AND FUEL BURNING DEVICES MUST BE INSTALLED, OPERATED AND MAINTAINED IN ACCORDANCE WITH THE MANUFACTURER’S INSTRUCTIONS.

EVEN WITH DOORS AND WINDOWS OR VENTS OPEN, CARBON MONOXIDE CAN BUILD UP AND SEEP INTO THE LIVING SPACE THROUGH CRACKS AND OPENINGS IN THE STRUCTURE. TOXIC FUMES, INCLUDING CARBON MONOXIDE, CAN ALSO BE DRAWN INTO THE LIVING SPACE THROUGH OPENINGS AND SEAMS IN THE CENTRAL HEATING AND AIR CONDITIONING EQUIPMENT AND / OR DUCTWORK.

FOR THESE REASONS, THE U.S. CONSUMER PRODUCT SAFETY COMMISSION (CPSC) RECOMMENDS THAT EVERY HOME HAVE AT LEAST ONE CARBON MONOXIDE ALARM INSTALLED IN THE HALLWAY NEAR THE BEDROOMS IN EACH SEPARATE SLEEPING AREA OF THE HOME. CARBON MONOXIDE ALARMS SHOULD BE CERTIFIED TO THE REQUIREMENTS OF THE MOST RECENT UL, IAS OR CSA STANDARD, AND SHOULD BE INSTALLED, OPERATED AND MAINTAINED IN ACCORDANCE WITH THE ALARM MANUFACTURER’S INSTRUCTIONS.

HEATING OPERATION

FOR YOUR SAFETY, READ BEFORE OPERATING

⚠ WARNING

IF YOU DO NOT FOLLOW THESE INSTRUCTIONS EXACTLY, A FIRE OR EXPLOSION MAY RESULT CAUSING PROPERTY DAMAGE, PERSONAL INJURY OR LOSS OF LIFE.

A. This appliance is equipped with an ignition device which automatically lights the burners. Do **not** try to light the burners by hand.

B. BEFORE OPERATING smell all around the appliance area for gas. Be sure to smell next to the ground because some gas is heavier than air and will settle on the ground.

WHAT TO DO IF YOU SMELL GAS
- Do not try to light any appliance.
- Do not touch any electric switch, do not use any phone in your building.
- Immediately call your gas supplier from a neighbor's phone. Follow the gas supplier's instructions.
- If you cannot reach your gas supplier, call the fire department.
- Do not return to your home until authorized by the gas supplier for fire department.

C. Use only your hand to move the gas control switch. Never use tools. If the switch will not move by hand, don't try to repair it; call a qualified service technician. Force or attempted repair may result in a fire or explosion.

WHITE RODGERS 36H54-473
TWO STAGE GAS VALVE

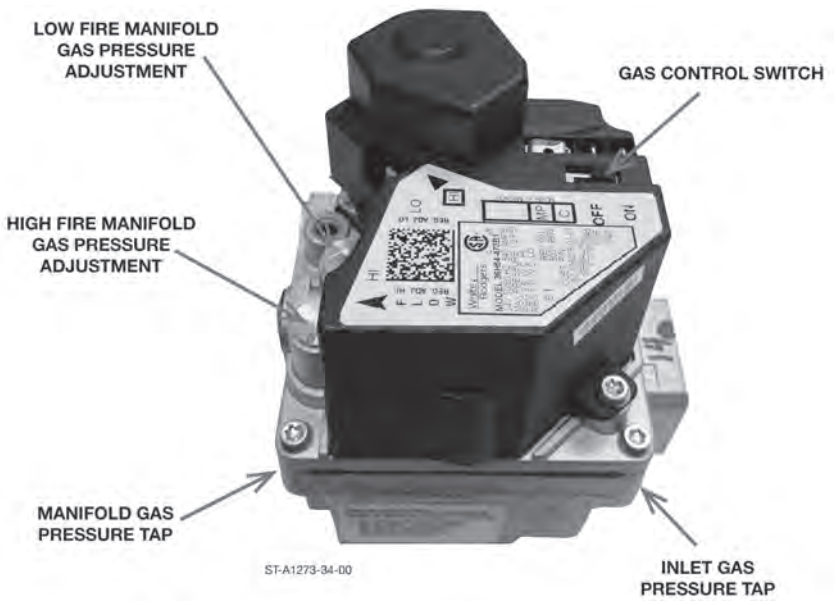

Used on (-)GED Models with Fuel Code: 3A, 3B, 3C

HONEYWELL VR8305Q
TWO STAGE GAS VALVE

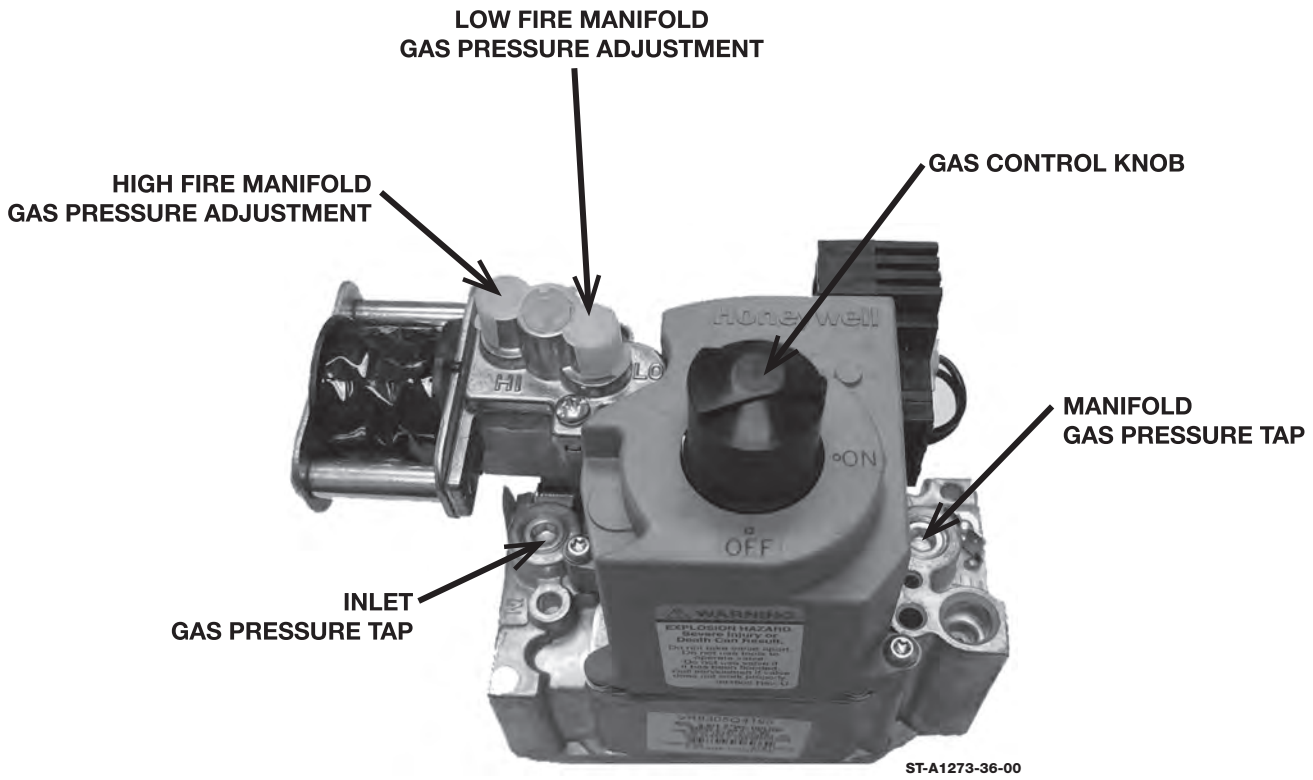

Used on (-)GED Models with Fuel Code: 3D, 3E, 3F

NORMAL FURNACE OPERATING SEQUENCE

This unit is equipped with a two stage integrated direct spark ignition control.

NORMAL HEAT MODE

A. Call For First Stage (low fire) Only:

1. Zone thermostat contacts close, a call for first stage (low fire) heat is initiated.
2. Control runs self check.
3. Control checks the high-limit switch for normally closed contacts, the pressure switch for normally open contacts, and all flame rollout switches for continuity.
4. Control energizes the inducer.
5. Control checks the low-fire pressure switch for closure.
6. If the pressure switch is closed, the control starts a 30 second prepurge. If the pressure switch is still open after 180 seconds, the inducer will be energized until closure.
7. After prepurge timeout, control initiates spark for 2 seconds minimum, 7 second maximum ignition trial, initiates 45 second, second stage (high fire) warm up timing.
8. Control detects flame, de-energizes spark and initiates 45 second delay on blower timing.
9. After a fixed 45 seconds indoor blower delay on, the control energizes the indoor blower.
10. After the 45 second second stage warmup period control checks thermostat input. If only W1 is called for, W2 is de-energized.
11. Control enters normal operating loop where all inputs are continuously checked.

B. Call For Second Stage, After First Stage Established; Starting from A.11:

1. If a call for second stage (high fire) is initiated after a call for first stage heat is established, the control assures the pressure switch is closed and energizes the second stage of the gas valve.
2. Control enters normal operating loop where all inputs are continuously checked.

C. Second Stage Satisfied; First Stage Still Called For; Starting From B.2:

1. Once the call for second stage is satisfied, the control reduces the gas valve to first stage.
2. Control enters normal operating loop where all inputs are continuously checked.

D. First Stage Satisfied:

1. Zone thermostat is satisfied.
2. Control de-energizes gas valve.
3. Control senses loss of flame.
4. Control initiates 5 second inducer postpurge and 90 second indoor blower delay off.
5. Control de-energizes inducer blower.
6. Control de-energizes indoor blower.
7. Control in the stand by mode with solid red LED.

E. First Stage and Second Stage Called Simultaneously:

1. Zone thermostat contacts close, a call for first stage (low fire) and second stage (high fire) heat is initiated.
2. Control runs self check.
3. Control checks the limit switch for normally closed contacts, the switch for normally open contacts, and the flame rollout switch for continuity.
4. Control energizes the inducer.
5. Control checks the pressure switch for closure.
6. If the pressure switch is closed, the control starts a 30 second prepurge. If the switch is still open after 180 seconds, the inducer will be energized until closure.
7. After prepurge timeout, control initiates spark for 2 seconds minimum, 7 second maximum ignition trial, and initiates 45 second second stage warm up timing.
8. Control detects flame, de-energizes spark and starts a 45 second indoor blower delay on timing.
9. After a fixed 45 seconds indoor blower delay on, the control energizes the indoor blower.
10. After the 45 seconds second stage warmup period control checks the thermostat input. If W1 and W2 is present control enters normal operating loop where all inputs are continuously checked.

F. First Stage and Second Stage Removed Simultaneously:

1. Upon a loss of W1 and W2 the gas valve is de-energized.
2. Upon a loss of flame, the inducer will complete a 5 second postpurge and the indoor blower will complete a 90 second delay off.
3. Control in the stand by mode with solid red LED.

The integrated control is a four-ignition system.

After a total of four cycles without sensing main burner flame, the system goes into a 100% lockout mode. After one hour, the ignition control repeats the prepurge and ignition cycles for 4 tries and then go into 100% lockout mode again. It continues this sequence of cycles and lockout each hour until ignition is successful or power is interrupted. During the lockout mode, neither the ignitor or gas valve will be energized until the system is reset by turning the thermostat to the “OFF” position or interrupting the electrical power to the unit for 3 seconds or longer. The induced draft blower and main burner will shut off when the thermostat is satisfied.

The circulating air blower will start and run on the heating speed if the thermostat fan switch is in the “ON” position.

All integrated furnace controls come standard with a 7 segment diagnostic display. During standby mode with no fault codes present, the display will read “0” (zero). During normal thermostat heating, cooling or continuous fan operations a letter will be displayed to describe the mode of operation outlined in the “Installation and Operating Manual” normal operation codes.

OPERATING INSTRUCTIONS

This appliance is equipped with integrated furnace control. This device lights the main burners each time the room thermostat (closes) calls for heat. See operating instructions on the back of the furnace/controls access panel.

⚠ WARNING

DO NOT ATTEMPT TO MANUALLY LIGHT THIS FURNACE WITH A MATCH OR ANY OPEN FLAME. ATTEMPTING TO DO SO CAN CAUSE AN EXPLOSION OR FIRE RESULTING IN PROPERTY DAMAGE, PERSONAL INJURY OR DEATH.

TO START THE FURNACE

1. Set the thermostat to its lowest setting.
2. Turn off all electric power to the appliance.
3. This appliance does not have a pilot. It is equipped with an ignition device which automatically lights the burner. Do not try to light the burner by hand.
4. Remove control door.
5. Move control switch/knob on the gas valve to the “OFF” position.
6. Wait five (5) minutes to clear out any gas. Then smell for gas, including near the floor. If you smell gas, STOP! Follow B in the safety information on the Operating Instructions located on the back of the controls/access panel. If you don’t smell gas, go to the next step.
7. Move the gas control switch/knob on the gas valve from “OFF” position to “ON” position. Operate this appliance with the gas control switch/knob on the gas valve in the “ON” position only.
8. Replace the control door.
9. Turn on all electric power to the appliance.
10. Set the thermostat to the desired setting.
11. If the appliance will not operate, follow the instructions below on how to shut down the furnace.

⚠ WARNING

THE SPARK IGNITOR AND IGNITION LEAD FROM THE IGNITION CONTROL ARE HIGH VOLTAGE. KEEP HANDS OR TOOLS AWAY TO PREVENT ELECTRICAL SHOCK. SHUT OFF ELECTRICAL POWER BEFORE SERVICING ANY OF THE CONTROLS. FAILURE TO ADHERE TO THIS WARNING CAN RESULT IN PERSONAL INJURY OR DEATH.

The initial start-up on a new installation may require the control system to be energized for some time until air has bled through the system and fuel gas is available at the burners.

TO SHUT DOWN FURNACE

1. Set the thermostat to the lowest setting.
2. Turn off all electric power to the appliance if service is to be performed.
3. Remove control door.
4. Move control switch/knob on the gas valve to the “OFF” position.
5. Replace control door.

⚠ WARNING

SHOULD OVERHEATING OCCUR OR THE GAS SUPPLY FAIL TO SHUT OFF, SHUT OFF THE MANUAL GAS VALVE TO THE APPLIANCE BEFORE SHUTTING OFF THE ELECTRICAL SUPPLY. FAILURE TO DO SO CAN RESULT IN AN EXPLOSION OR FIRE CAUSING PROPERTY DAMAGE, SEVERE PERSONAL INJURY OR DEATH!

BURNERS

Burners for these units have been designed so that field adjustment is not required. Burners are tray-mounted and accessible for easy cleaning when required.

MANUAL RESET OVERTEMPERATURE CONTROL

Two manual reset overtemperature controls are located on the burner shield. These devices senses blockage in the heat exchanger or insufficient combustion air. This shuts off the main burners if excessive temperatures occur in the burner compartment.

Operation of this control indicates an abnormal condition. Therefore, the unit should be examined by a qualified installer, service agency, or the gas supplier before being placed back into operation.

⚠ WARNING

DO NOT ATTEMPT TO DEFEAT THIS IMPORTANT SAFETY DEVICE. DO NOT RESET THE OVERTEMPERATURE CONTROL WITHOUT TAKING CORRECTIVE ACTION TO ASSURE THAT AN ADEQUATE SUPPLY OF COMBUSTION AIR IS MAINTAINED UNDER ALL CONDITIONS OF OPERATION AND THAT NO HEAT EXCHANGER TUBES ARE BLOCKED OR PERFORATED. REPLACE THIS CONTROL ONLY WITH THE IDENTICAL REPLACEMENT PART. FAILURE TO ADHERE TO THIS WARNING CAN RESULT IN PERSONAL INJURY OR DEATH.

PRESSURE SWITCH

This furnace has two pressure switches for sensing a blocked exhaust or a failed induced draft blower. They are normally open and close when the induced draft blower starts, indicating air flow through the combustion chamber.

LIMIT CONTROL

The supply air high temperature limit cut-off is set at the factory and cannot be adjusted. It is calibrated to prevent the air temperature leaving the furnace from exceeding the maximum outlet air temperature.

⚠ WARNING

DO NOT JUMPER THIS DEVICE! DOING SO CAN CAUSE A FIRE OR EXPLOSION RESULTING IN PROPERTY DAMAGE, PERSONAL INJURY OR DEATH.

IMPORTANT: *Replace this control only with the identical replacement part.*

TROUBLESHOOTING - HEATING

PROBLEM

Insufficient heating —

REMEDY

a. Increase temperature setting on thermostat.
b. Check return air filters and change, if necessary.
c. Recheck to assure that all supply registers and diffusers are open.
d. Check closing of all doors and windows.
e. Check that blower compartment doors are in place.
f. Call your servicing contractor.

COOLING OPERATION

To Operate Cooling System

To Start: Set thermostat at desired setting with system switch on “Cool” and fan switch on “Auto” or “On” position.

To Shut Down: Set thermostat to “Off” position.

SEQUENCE OF OPERATION - COOLING

1. Thermostat calls for cooling.
2. Compressor, condenser fan motor, and circulation air blower are energized.
3. Thermostat is satisfied and opens.
4. Compressor and condenser fan motor are de-energized.
5. Circulation air blower is de-energized after 60 seconds.

GENERAL INFORMATION - COOLING

1. If your outdoor unit is equipped with an optional external manual high pressure switch reset button, have your servicing contractor familiarize you with its location. Many models have compressors equipped with internal pressure relief valves using an automatic reset feature eliminating the need for an external control. This high pressure switch or the relief valve will open under excessive high pressures to protect the compressor. Some models with internal relief valves will require power interruption prior to resetting itself. The high refrigerant pressure may be due to a temporary condition, so if your unit is equipped with a reset button, you may reset it as required. However, if the problem persists, refer to Item 3, and/or refer the problem to your servicing contractor.
2. If the condenser coil is allowed to become restricted by dirt, lint, paper, grass clippings, leaves, etc., the system efficiency will suffer and abnormally high refrigerant operating pressures will result. To correct this condition, be sure to first cut off power to the unit and then clean such material from the condenser coil and cabinet. Using a garden hose with a nozzle can be effective in cleaning the condenser coil, but the water should be sprayed from the inside to outside of the coil in the opposite direction from the normal airflow. Disconnect the main power before washing the coil.
3. If you know or suspect that the compressor s not working, you should place the thermostat system switch on the thermostat subbase to the “Off” position. This will stop the operation of the compressor/condenser unit.
4. If you suspect that a cooling problem has developed with your system and before you advise you servicing contractor, we suggest you check the following service hints.

TROUBLESHOOTING - COOLING

PROBLEM

No cooling —

REMEDY

a. Set thermostat correctly.
b. Reset high pressure switch on unit.
c. Check fusing or circuit breakers serving unit.
d. Call servicing contractor.

PROBLEM

Insufficient cooling —

Unit operates continuously

REMEDY

a. Check air filters.
b. Check for blocked return air system.
c. Check to see if supply registers have been closed.
d. Check for open doors and windows.
e. Call your servicing contractor.

Please do not attempt any servicing operation with which you are not familiar or experienced unless you are advised by your servicing contractor of the proper procedures.

ROUTINE MAINTENANCE

⚠ WARNING

ELECTRICAL SHOCK, FIRE OR EXPLOSION HAZARD

Failure to follow safety warnings exactly could result in dangerous operation, serious injury, death or property damage. Improper servicing could result in dangerous operation, serious injury, death or property damage.

- **Before servicing, disconnect all electrical power to furnace.**
- **When servicing controls, label all wires prior to disconnecting. Reconnect wires correctly.**
- **Verify proper operation after servicing.**

COMBUSTION AREA AND EXHAUST SYSTEM

1. It is recommended that an annual inspection of your furnace be done by a qualified installer, service agency or the gas supplier.
2. Turn OFF the electrical supply to the furnace and remove the access doors.
3. Inspect the gas burners and burner compartment for dirt, rust, or scale.

⚠ WARNING

IF DIRT, RUST, SOOT OR SCALE ACCUMULATIONS ARE PRESENT, DO NOT OPERATE THIS FURNACE. INSPECT THE HEAT EXCHANGERS FOR LEAKS. LEAKS CAN CAUSE TOXIC FUMES TO ENTER THE HOME AND CAUSE INJURY OR DEATH.

4. Inspect the exhaust area inside and outside the appliance including the exhaust transition piece and the exhaust hood. Be sure that the exhaust transition piece (inside the appliance) and the hood are in place and are physically sound, without holes or excessive corrosion. If these components have deteriorated, have a qualified service professional replace them using factory specified or approved replacement parts only.
5. Be sure that the return air duct connections are physically sound and are sealed to the unit.
6. Look for obvious signs of deterioration of the unit.
7. If the unit is free of the above conditions, replace all access doors, except furnace access panel, and restore electrical power to the unit.
8. Make sure control box cover is in place. Start the furnace and observe its operation. Watch the burner flames to see if they are bright blue. If a suspected malfunction is observed, or the burner flames are not bright blue, apply appropriate service.

EXAMINATION OF INSTALLATION

1. The combustion air inlets and combustion air outlets must be clear and free of obstructions.
2. The return and supply duct connections should be physically sound and sealed where they connect to the unit.
3. Check for obvious signs of deterioration of the unit.
4. CONDENSATE DRAIN — Check annually and, if necessary, clean drain pan and drain line. In winter, keep drain and trap dry or protect against freeze-up.
5. The blower compartment and motor should be inspected and cleaned periodically by your qualified installer, service agency or the gas supplier to prevent the possibility of overheating due to an accumulation of dust and dirt on the windings or on the motor exterior. And, as suggested elsewhere in these instructions, the air filters should be kept clean because dirty filters can restrict airflow and the motor depends upon sufficient air flowing across and through it to keep from overheating.
6. Perform the examination annually to insure proper operation.

FILTER MAINTENANCE

Have your qualified installer, service agency or the gas supplier instruct you on how to access your filters for regular maintenance.

⚠ WARNING

DISCONNECT THE MAIN POWER TO THE OUTDOOR UNIT BEFORE ATTEMPTING ANY MAINTENANCE OPERATION. FAILURE TO DO SO CAN RESULT IN BODILY INJURY, SEVERE ELECTRICAL SHOCK, OR DEATH.

Filter quantity: 4
Filter size: 2” × 20” × 20”

1. Keep air filters clean. There are several types of material used in air filters and there are many possible locations for air filters. Consult with your contractor as to the locations of the filters and type of material in use.
2. How To Clean:

   Glass Fiber (Throwaway) — This is a disposable type of filter. Inspect monthly and replace when necessary. A new home or building will normally require more frequent attention to the filters.

   Aluminum Mesh — Wash with detergent and water. Air dry thoroughly and renew the coating in compliance with the manufacturer’s instructions.

   Plastic Impregnated Fiber — Wash with detergent and water or vacuum clean, then reinstall.

   IMPORTANT: *Do not operate your system for extended periods without filters, as the dust entrained in the air may pack into the fin area of the evaporator coil creating a condition which could require extensive repairs.*

⚠ WARNING

A PORTION OF THE DUST ENTRAINED IN THE AIR MAY TEMPORARILY LODGE IN THE AIR DUCT RUNS AND AT THE SUPPLY REGISTERS. ANY RECIRCULATED DUST PARTICLES WILL BE HEATED AND CHARRED BY CONTACT WITH THE FURNACE HEAT EXCHANGER. THIS RESIDUE WILL SOIL CEILINGS, WALLS, DRAPES, CARPETS, AND OTHER HOUSEHOLD ARTICLES.

LUBRICATION

IMPORTANT: DO NOT attempt to lubricate the bearings on the blower motor or the induced draft blower motor. Addition of lubricants can reduce the motor life and void the warranty.

The blower motor and induced draft blower motor are prelubricated by the manufacturer and do not require further attention.

The blower motor and induced draft blower motor must be cleaned periodically by a qualified installer, service agency, or the gas supplier to prevent the possibility of overheating due to an accumulation of dust and dirt on the windings or on the motor exterior. And, as suggested elsewhere in these instructions, the air filters can restrict airflow. The motor depends upon sufficient air flowing across and through it to keep from overheating.

PROTECTING EQUIPMENT FROM THE ENVIRONMENT

The metal parts of this unit may be subject to rust or deterioration in adverse environmental conditions. This oxidation could shorten the equipment’s useful life. Salt spray, fog or mist in seacoast areas, sulphur or chlorine from lawn watering systems, and various chemical contaminants from industries such as paper mills and petroleum refineries are especially corrosive.

⚠ WARNING

DISCONNECT ALL POWER TO UNIT BEFORE STARTING MAINTENANCE. FAILURE TO DO SO CAN RESULT IN SEVERE ELECTRICAL SHOCK OR DEATH.

1. Avoid having lawn sprinkler heads spray directly on the unit cabinet.
2. Frequent washing of the cabinet, fan blade and coil with fresh water will remove most of the salt or other contaminants that build up on the unit.
3. Regular cleaning and waxing of the cabinet with a good automobile polish will provide some protection.
4. A good liquid cleaner may be used several times a year to remove matter that will not wash off with water.

Several different types of protective coatings are offered in some areas. These coatings may provide some benefit, but the effectiveness of such coating materials cannot be verified by the equipment manufacturer.

The best protection is frequent cleaning, maintenance and minimal exposure to contaminants.