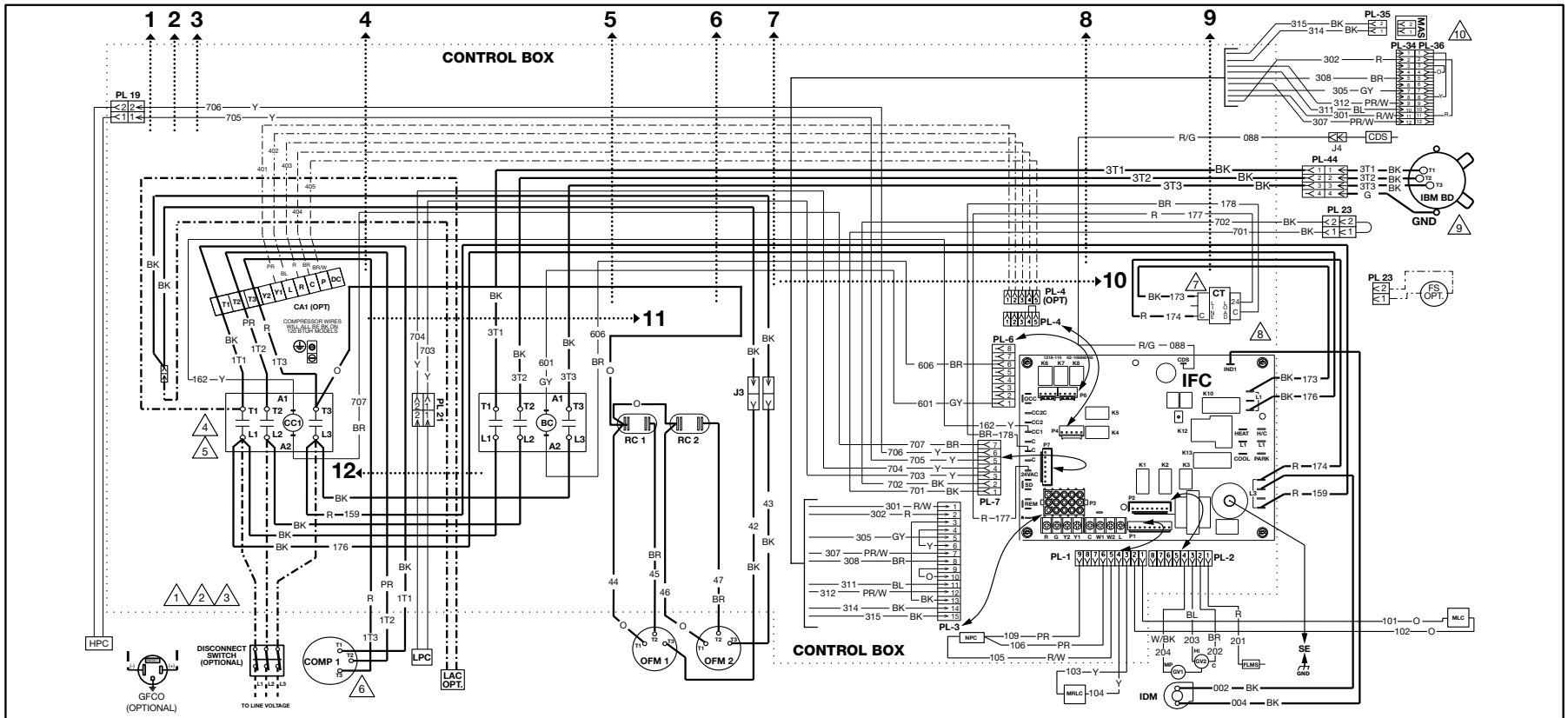

WIRING INFORMATION

LINE VOLTAGE
- -FACTORY STANDARD
- -FACTORY OPTION
- -FIELD INSTALLED

LOW VOLTAGE
- -FACTORY STANDARD
- -FACTORY OPTION
- -FIELD INSTALLED

REPLACEMENT WIRE
-MUST BE THE SAME SIZE AND TYPE OF INSULATION AS ORIGINAL (105ºC MIN.)

WARNING
-CABINET MUST BE PERMANENTLY GROUNDED AND CONFORM TO I.E.C., N.E.C., C.E.C., NATIONAL WIRING REGULATIONS, AND LOCAL CODES A'S APPLICABLE.

NOTES

1. CONNECTORS SUITABLE FOR USE WITH COPPER CONDUCTORS ONLY.
2. CONNECT FIELD WIRING IN GROUNDED RAIN TIGHT CONDUIT TO FUSED DISCONNECT.
3. CONNECT FIELD WIRE TO COMPRESSOR CONTACTOR (CC1).
4. REMOVE J3 AT (CC1) TO INSTALL LOW AMBIENT ACCESSORY.
5. IF REQUIRED, ATTACH CRANKCASE HEATER ACCESSORY TO CC1 (L1) AND CC1 (L2).
6. COMPRESSOR MOTOR THERMALLY PROTECTED. ALL 3 PHASE MODELS ARE PROTECTED UNDER PRIMARY SINGLE PHASE CONDITIONS.
7. TRANSFORMER FACTORY WIRED AS SHOWN BELOW. CHANGE PRIMARY VOLTAGE CONNECTIONS FOR ALTERNATE VOLTAGES, IF REQUIRED.

UNIT VOLTAGES - HZ	TRANSFORMER TERM.
200-220 - 50HZ	200
208 - 60HZ	230
230 - 60HZ	230
380 - 60HZ	400
380-415 - 50HZ	400
460 - 60HZ	460
575 - 60HZ	230

8. LOW VOLTAGE CIRCUIT IS N.E.C. CLASS 2 WITH A CLASS 2 TRANSFORMER, 24VAC, 50/60 HZ SUPPLIED.
9. MOTOR FACTORY WIRED FOR CORRECT VOLTAGE.
10. REMOVE PL36 FOR ECONOMIZER ACCESSORY. PL34 AND PL36 LOCATED IN RETURN AIR SECTION.

COMPONENT CODES

BC	BLOWER CONTACTOR
CA	COMFORT ALERT MODULE
CC	COMPRESSOR CONTACTOR
CCH	CRANKCASE HEATER
CDS	CLOGGED DRAIN SENSOR
CFS	CLOGGED FILTER SWITCH
COMP	COMPRESSOR
CT	CONTROL TRANSFORMER
DAT	DISCHARGE AIR SENSOR
DISC	DISCONNECT SWITCH
FLMS	FLAME SENSOR
FP	FAN PROVING SWITCH
FS	FREEZE SENSOR
GFCO	GROUND FAULT CONVENIENCE OUTLET
GL	GROUND LUG
GND	GROUND
GV	GAS VALVE
HPC	HIGH PRESSURE CONTROL
IBM	INDOOR BLOWER MOTOR
IDM	INDUCED DRAFT MOTOR
IFC	INTEGRATED FURNACE CONTROL
J	JUMPER
LAC	LOW AMBIENT CONTROL
LPC	LOW PRESSURE CONTROL
MAS	MIXED AIR SENSOR
MLC	MAIN LIMIT CONTROL
MRLC	MANUAL RESET LIMIT CONTROL
NPC	NEGATIVE PRESSURE SWITCH
OAT	OUTSIDE AIR SENSOR
OFM	OUTDOOR FAN MOTOR
PL	PLUG
PT	POWER TRANSFORMER
RAT	RETURN AIR SENSOR
RC	RUN CAPACITOR
RTU-C	ROOFTOP UNIT CONTROL
SE	SPARK ELECTRODE
##	WIRE TIE

WIRE COLOR CODE

BK.....BLACK	G.....GREEN	PR.....PURPLE
BR.....BROWN	G Y .....GRAY	R.....RED
BL.....BLUE	O.....ORANGE	W .....WHITE
		Y.....YELLOW

ELECTRICAL WIRING DIAGRAM

GE NON DDC 1 STG 090/102/120
208/230/380/460V, 3PH, 60HZ

GE NON DDC 1 STG 072/090/102
380-415V, 3PH, 50HZ

APPROVED:	CHECKED:	ORIGINAL RELEASE NO.:
MODELED BY: TEW	DATE: 10-17-17	R-1071S089
PART NO.: 90-106177-01		REV: 02

FIGURE 22

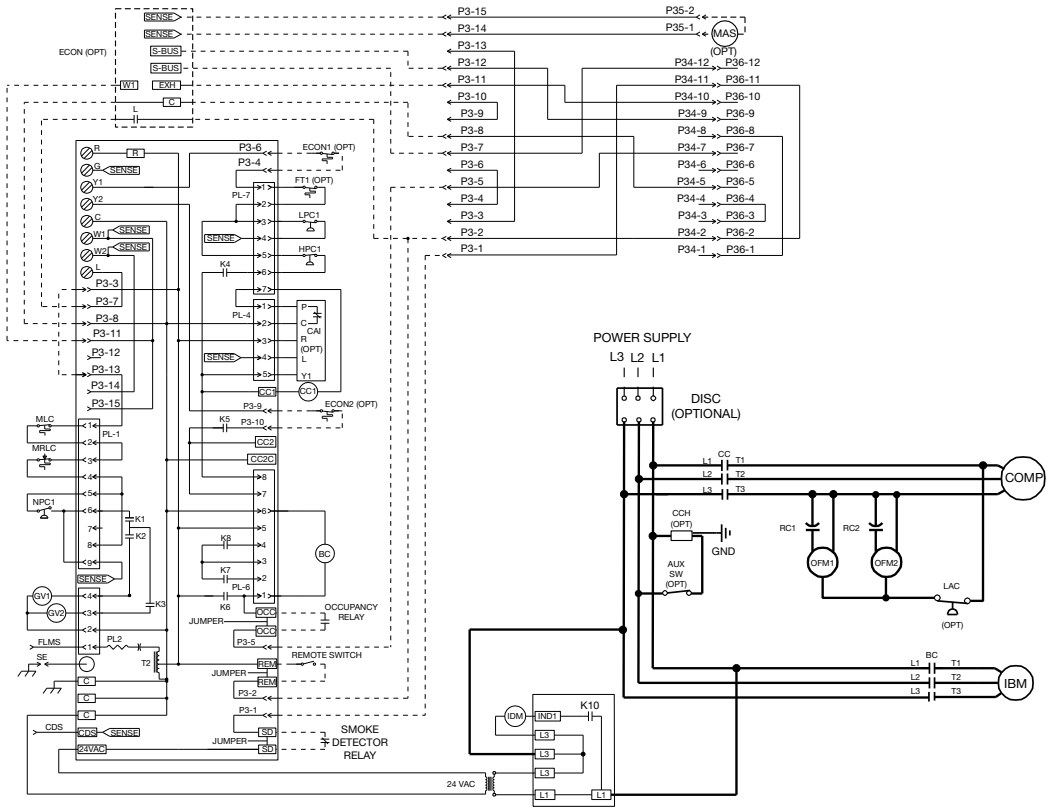

ALARM CODES

CODE	Description	FAULT LEVEL –0,1,2,3*
0	STANDBY	0
c	COMPRESSOR ON – Low (Flashing if in time delay)	0
C	COMPRESSOR ON – High (Flashing if in time delay)	0
E	Economizer Cooling – No Compressor	0
F	CONTINUOUS FAN	0
h	HEAT ON – Low Stage	0
H	GAS HEAT ON – High Stage	0
4	Comfort Alert Code 4 for Compressor Circuit 1	3
5	Comfort Alert Code 5 for Compressor Circuit 1	3
6	Comfort Alert Code 6 for Compressor Circuit 1	3
7	Comfort Alert Code 7 for Compressor Circuit 1	3
8	Comfort Alert Code 8 for Compressor Circuit 1	3
9	Comfort Alert Code 9 for Compressor Circuit 1	3
11	FAILED IGNITION	2
12	LO FLAME SENSE	1
13	FLAME LOST	2
14	UNEXPECTED FLAME	3
15	2nd Stage Gas valve improper voltage	2
20	REFRIGERANT LOW PRESSURE SWITCH OPEN – CIRCUIT 1	2
21	REFRIGERANT LOW PRESSURE SWITCH OPEN – CIRCUIT 2	2
22	MAIN LIMIT OPEN	2
29	REFRIGERANT HIGH PRESSURE SWITCH OPEN – CIRCUIT 1	2
30	REFRIGERANT HIGH PRESSURE SWITCH OPEN – CIRCUIT 2	2
33	MRLC (Rollout Limit) OPEN	2
34	Comfort Alert Code 4 for Compressor Circuit 2	3
35	Comfort Alert Code 5 for Compressor Circuit 2	3
36	Comfort Alert Code 6 for Compressor Circuit 2	3
37	Comfort Alert Code 7 for Compressor Circuit 2	3
38	Comfort Alert Code 8 for Compressor Circuit 2	3
39	Comfort Alert Code 9 for Compressor Circuit 2	3
42	Invalid Thermostat Selection	1
44	1st Stage COMBUSTION PRESS SWITCH CLOSED	2
46	1st Stage COMBUSTION PRESS SWITCH OPEN	2
49	FREEZE SWITCH OPEN – CIRCUIT 1	2
50	FREEZE SWITCH OPEN -CIRCUIT 2	2
55	2nd Stage COMBUSTION PRESS SWITCH CLOSED	2
57	2nd Stage COMBUSTION PRESS SWITCH OPEN	2,3
59	Condensate Drain Plugged	3
61	Blower Fault – NO RUN	3
83	Condenser Coil Temp Sensor Fail-OCT	2
84	Outdoor Air Temperature Sensor Fail-OAT	2
88	Emergency Stop Fault	3
93	CONTROL Fault	3
97	Smoke Detection	3

*Fault levels:0 = none, 1=warning, 2= problem, 3=shutdown

WIRING INFORMATION

LINE VOLTAGE
-FACTORY STANDARD
-FACTORY OPTION
-FIELD INSTALLED

LOW VOLTAGE
-FACTORY STANDARD
-FACTORY OPTION
-FIELD INSTALLED

REPLACEMENT WIRE
-MUST BE THE SAME SIZE AND TYPE OF I NSULATION AS ORIGINAL (105ºC MIN.)

WARNING
-CABINET MUST BE PERMANE NTLY GROUNDED AND CONFORM TO I.E.C., N.E.C., C.E.C., NATIONAL WIRING REGULATIONS, AND LOCAL CODES A S APPLICABLE.

NOTES

1. CONNECTORS SUITABLE FOR USE WITH COPPER CONDUCTORS ONLY.
2. CONNECT FIELD WIRING IN GROUNDED RAIN TIGHT CONDUIT TO FUSED DISCONNECT.
3. CONNECT FIELD WIRE TO COMPRESSOR CONTACTOR (CC1).
4. REMOVE J3 AT (CC1) TO INSTALL LOW AMBIENT ACCESSORY.
5. IF REQUIRED, ATTACH CRANKCASE HEATER ACCESSORY TO CC1 (L1) AND CC1 (L2).
6. COMPRESSOR MOTOR THERMALLY PROTECTED. ALL 3 PHASE MODELS ARE PROTECTED UNDER PRIMARY SINGLE PHASE CONDITIONS.
7. TRANSFORMER FACTORY WIRED AS SHOWN BELOW. CHANGE PRIMARY VOLTAGE CONNECTIONS FOR ALTERNATE VOLTAGES, IF REQUIRED.

UNIT VOLTAGES - HZ	TRANSFORMER TERM.
200-220 - 50HZ	200
208 - 60HZ	230
230 - 60HZ	230
380 - 60HZ	400
380-415 - 50HZ	400
460 - 60HZ	460
575 - 60HZ	230

8. LOW VOLTAGE CIRCUIT IS N.E.C. CLASS 2 WITH A CLASS 2 TRANSFORMER, 24VAC, 50/60 HZ SUPPLIED.
9. MOTOR FACTORY WIRED FOR CORRECT VOLTAGE.
10. REMOVE PL36 FOR ECONOMIZER ACCESSORY. PL34 AND PL36 LOCATED IN RETURN AIR SECTION.

COMPONENT CODES

BC	BLOWER CONTACTOR
CA	COMFORT ALERT MODULE
CC	COMPRESSOR CONTACTOR
CCH	CRANKCASE HEATER
CDS	CLOGGED DRAIN SENSOR
CFS	CLOGGED FILTER SWITCH
COMP	COMPRESSOR
CT	CONTROL TRANSFORMER
DAT	DISCHARGE AIR SENSOR
DISC	DISCONNECT SWITCH
FLMS	FLAME SENSOR
FP	FAN PROVING
FS	FREEZE SENSOR
GFCO	GROUND FAULT CONVENIENCE OUTLET
GL	GROUND LUG
GND	GROUND
HPC	HIGH PRESSURE CONTROL
IBM	INDOOR BLOWER MOTOR
IDM	INDUCED DRAFT MOTOR
IFC	INTEGRATED FURNACE CONTROL
LAC	LOW AMBIENT CONTROL
LPC	LOW PRESSURE CONTROL
MAS	MIXED AIR SENSOR
MLC	MAIN LIMIT CONTROL
MRLC	MANUAL RESET LIMIT CONTROL
NPC	NEGATIVE PRESSURE SWITCH
OAT	OUTSIDE AIR SENSOR
OFM	OUTDOOR FAN MOTOR
PL	PLUG
PT	POWER TRANSFORMER
RAT	RETURN AIR SENSOR
RC	RUN CAPACITOR
RTU-C	ROOFTOP UNIT CONTROL
SE	SPARK ELECTRODE

WIRE COLOR CODE

BK.....BLACK
BR.....BROWN
BL.....BLUE
G.....GREEN
G Y .....GRAY
O.....ORANGE
PR.....PURPLE
R.....RED
W .....WHITE
Y .....YELLOW

ELECTRICAL WIRING SCHEMATIC

GE NON DDC 1 STG 090/102/120
208/230/380/460V, 3PH, 60HZ

GE NON DDC 1 STG 072/090/102
380-415V, 3PH, 50HZ

APPROVED:	CHECKED:	ORIGINAL RELEASE NO.:
MODELED BY: TEW	DATE: 10-17-17	R-1071S089
PART NO.: 90-106178-01		REV: 03

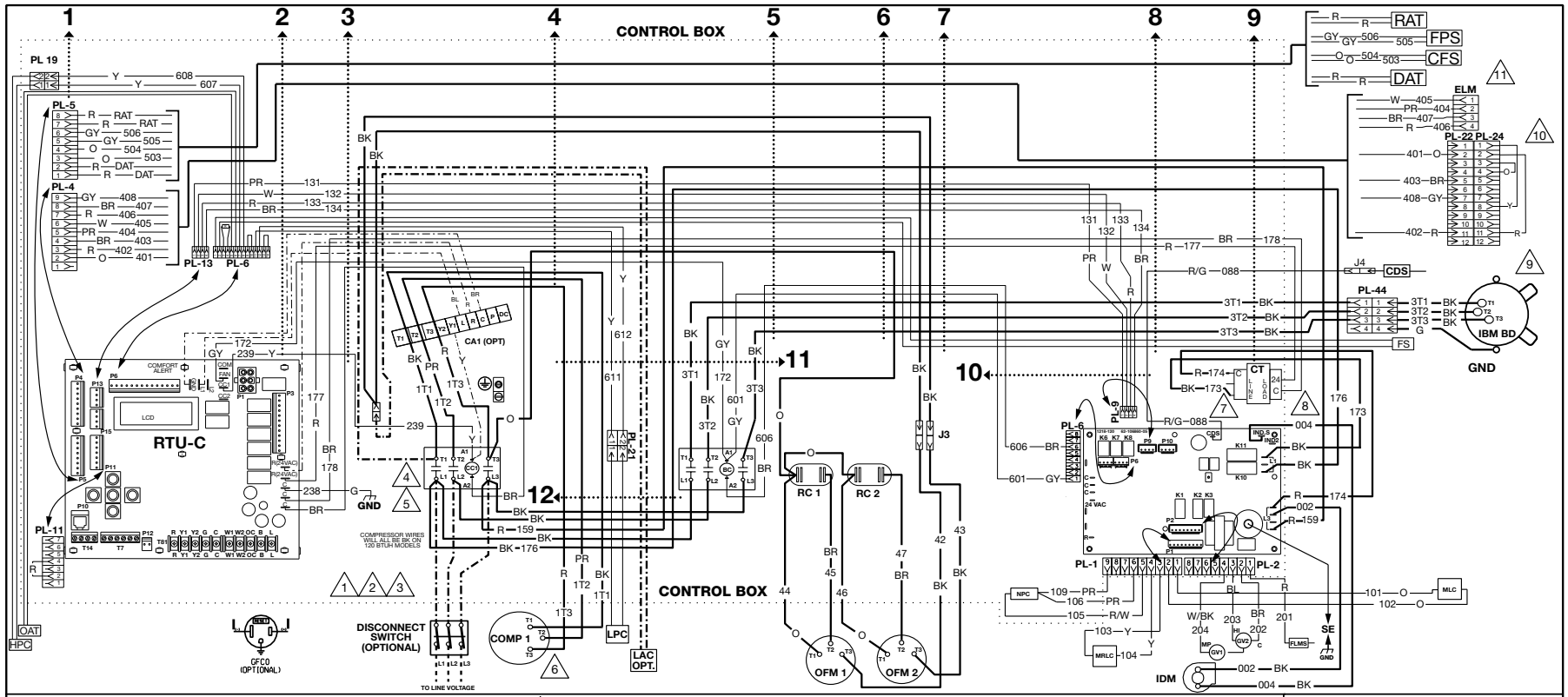

WIRING INFORMATION

LINE VOLTAGE
-FACTORY STANDARD
-FACTORY OPTION
-FIELD INSTALLED

LOW VOLTAGE
-FACTORY STANDARD
-FACTORY OPTION
-FIELD INSTALLED

REPLACEMENT WIRE
-MUST BE THE SAME SIZE AND TYPE OF INSULATION AS ORIGINAL (105°C.MIN.)

WARNING
-CABINET MUST BE PERMANENTLY GROUNDED AND CONFORM TO I.E.C., N.E.C., C.E.C., NATIONAL WIRING REGULATIONS, AND LOCAL CODES A S APPLICABLE.

NOTES

1. CONNECTORS SUITABLE FOR USE WITH COPPER CONDUCTORS ONLY.
2. CONNECT FIELD WIRING IN GROUNDED RAIN TIGHT CONDUIT TO FUSED DISCONNECT.
3. CONNECT FIELD WIRE TO COMPRESSOR CONTACTOR (CC1).
4. REMOVE J3 AT (CC1) TO INSTALL LOW AMBIENT ACCESSORY.
5. IF REQUIRED, ATTACH CRANKCASE HEATER ACCESSORY TO CC1 (L1) AND CC1 (L2).
6. COMPRESSOR MOTOR THERMALLY PROTECTED. ALL 3 PHASE MODELS ARE PROTECTED UNDER PRIMARY SINGLE PHASE CONDITIONS.
7. TRANSFORMER FACTORY WIRED AS SHOWN BELOW. CHANGE PRIMARY VOLTAGE CONNECTION FOR ALTERNATE VOLTAGES, IF REQUIRED.

UNIT VOLTAGES –HZ	TRANSFORMER TERM.
200-220 –50 HZ	200
208 –60 HZ	230
230 –60 HZ	230
380 –60 HZ	400
380-415 -50 HZ	400
460 –60 HZ	460
575 –60 HZ	230

8. LOW VOLTAGE CIRCUIT IS N.E.C. CLASS 2 WITH A CLASS 2 TRANSFORMER, 24VAC 50/60 HZ SUPPLIED.
9. MOTOR FACTORY WIRED FOR CORRECT VOLTAGE.
10. REMOVE PL24 FOR ECONOMIZER ACCESSORY. PL22 AND PL24 LOCATED IN RETURN AIR SECTION.
11. CONNECT TO ECONOMIZER LOGIC MODULE.

COMPONENT CODES

BC	BLOWER CONTACTOR
CA	COMFORT ALERT MODULE
CC	COMPRESSOR CONTACTOR
CCH	CRANKCASE HEATER
CDS	CLOG DRAIN SENSOR
CFS	CLOGGED FILTER SWITCH
COMP	COMPRESSOR
CT	CONTROL TRANSFORMER
DAT	DISCHARGE AIR SENSOR
DISC	DISCONNECT SWITCH
ELM	ECONOMIZER LOGIC MODULE
FLMS	FLAME SENSOR
FP	FAN PROVING SWITCH
FS	FREEZE SENSOR
FT	FREEZE STAT
GFCO	GROUND FAULT CONVENIENCE OUTLET
GL	GROUND LUG
GND	GROUND
GV	GAS VALVE
HPC	HIGH PRESSURE CONTROL
IBM	INDOOR BLOWER MOTOR
IDM	INDUCED DRAFT MOTOR
IFC	INTEGRATED FURNACE CONTROL
J	JUMPER
LAC	LOW AMBIENT CONTROL
LPC	LOW PRESSURE CONTROL
MLC	MAIN LIMIT CONTROL
MRLC	MANUAL RESET LIMIT CONTROL
NPC	NEGATIVE PRESSURE SWITCH
OAT	OUTSIDE AIR SENSOR
OFM	OUTDOOR FAN MOTOR
PL	PLUG
PT	POWER TRANSFORMER
RAT	RETURN AIR SENSOR
RC	RUN CAPACITOR
RTU-C	ROOFTOP UNIT CONTROL
SE	SPARK ELECTRODE
##	WIRE TIES

WIRE COLOR CODE

BK.....BLACK	G.....GREEN	PR.....PURPLE
BR.....BROWN	GY.....GRAY	R.....RED
BL.....BLUE	O.....ORANGE	W.....WHITE
		Y.....YELLOW

ELECTRICAL WIRING DIAGRAM

GE DDC 1-STG 090/102/1
208/230/380/460V, 3PH, 6

GE DDC 1-STG 072/090/102
380-415V, 3PH, 50HZ

APPROVED:	CHECKED:	ORIGINAL RELEASE NO.:
MODELED BY: TEW	DATE: 10-17-17	R-1071S108
PART NO.: 90-106177-02		REV: 01

FIGURE 24

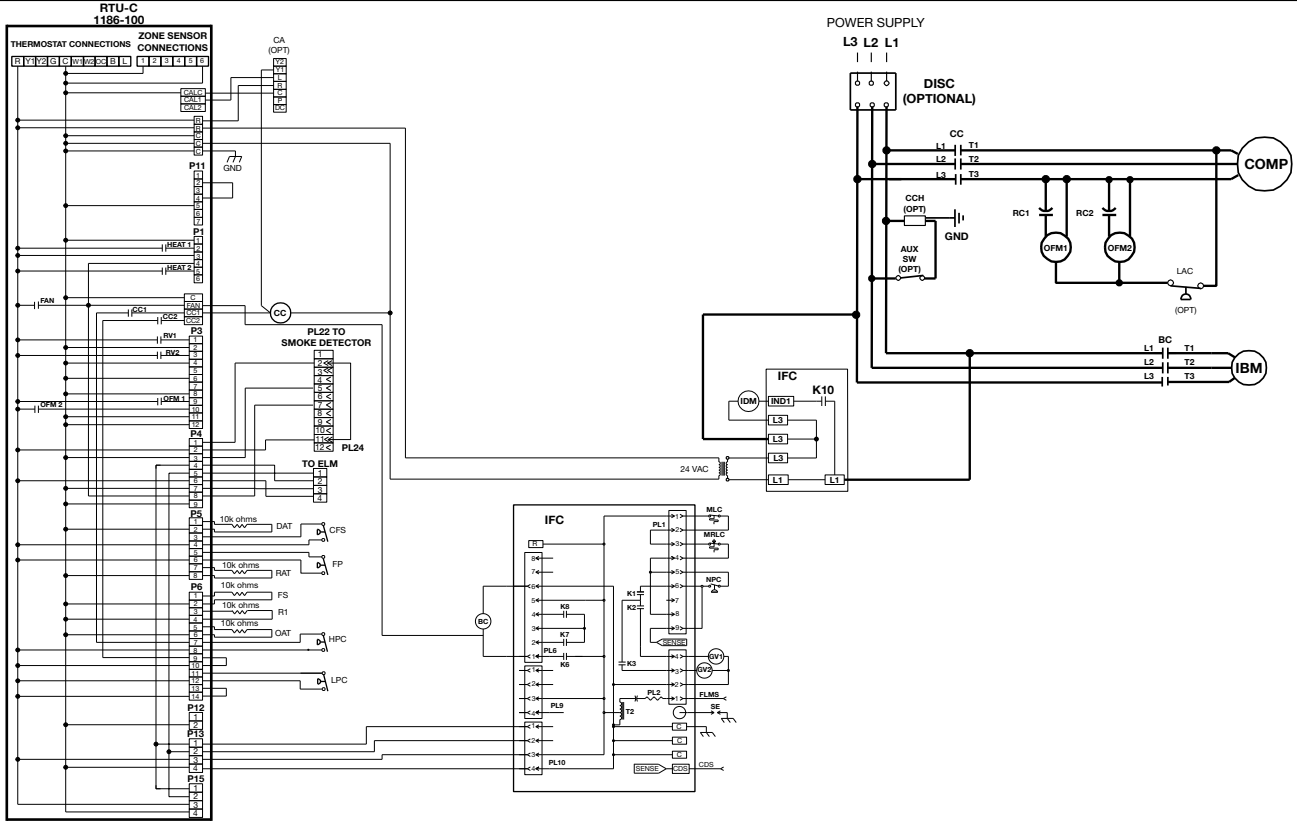

ALARM CODES

CODE	Description	FAULT LEVEL – 0,1,2,3*
0	STANDBY	0
c	COMPRESSOR ON – Low (Flashing if in time delay)	0
C	COMPRESSOR ON – High (Flashing if in time delay)	0
E	Economizer Cooling – No Compressor	0
F	CONTINUOUS FAN	0
h	HEAT ON – Low Stage	0
H	GAS HEAT ON – High Stage	0
4	Comfort Alert Code 4 for Compressor Circuit 1	3
5	Comfort Alert Code 5 for Compressor Circuit 1	3
6	Comfort Alert Code 6 for Compressor Circuit 1	3
7	Comfort Alert Code 7 for Compressor Circuit 1	3
8	Comfort Alert Code 8 for Compressor Circuit 1	3
9	Comfort Alert Code 9 for Compressor Circuit 1	3
11	FAILED IGNITION	2
12	LO FLAME SENSE	1
13	FLAME LOST	2
14	UNEXPECTED FLAME	3
15	2nd Stage Gas valve improper voltage	2
20	REFRIGERANT LOW PRESSURE SWITCH OPEN – CIRCUIT 1	2
21	REFRIGERANT LOW PRESSURE SWITCH OPEN – CIRCUIT 2	2
22	MAIN LIMIT OPEN	2
29	REFRIGERANT HIGH PRESSURE SWITCH OPEN – CIRCUIT 1	2
30	REFRIGERANT HIGH PRESSURE SWITCH OPEN – CIRCUIT 2	2
33	MRLC (Rollout Limit) OPEN	2
34	Comfort Alert Code 4 for Compressor Circuit 2	3
35	Comfort Alert Code 5 for Compressor Circuit 2	3
36	Comfort Alert Code 6 for Compressor Circuit 2	3
37	Comfort Alert Code 7 for Compressor Circuit 2	3
38	Comfort Alert Code 8 for Compressor Circuit 2	3
39	Comfort Alert Code 9 for Compressor Circuit 2	3
42	Invalid Thermostat Selection	1
44	1st Stage COMBUSTION PRESS SWITCH CLOSED	2
46	1st Stage COMBUSTION PRESS SWITCH OPEN	2
49	FREEZE SWITCH OPEN – CIRCUIT 1	2
50	FREEZE SWITCH OPEN -CIRCUIT 2	2
55	2nd Stage COMBUSTION PRESS SWITCH CLOSED	2
57	2nd Stage COMBUSTION PRESS SWITCH OPEN	2,3
59	Condensate Drain Plugged	3
61	Blower Fault – NO RUN	3
83	Condenser Coil Temp Sensor Fail-OCT	2
84	Outdoor Air Temperature Sensor Fail-OAT	2
88	Emergency Stop Fault	3
93	CONTROL Fault	3
97	Smoke Detection	3

*Fault levels:0 = none, 1=warning, 2= problem, 3=shutdown

WIRING INFORMATION

LINE VOLTAGE
-FACTORY STANDARD
-FACTORY OPTION
-FIELD INSTALLED

LOW VOLTAGE
-FACTORY STANDARD
-FACTORY OPTION
-FIELD INSTALLED

REPLACEMENT WIRE
-MUST BE THE SAME SIZE AND TYPE OF INSULATION AS ORIGINAL (105ºC MIN.)

WARNING
-CABINET MUST BE PERMANENTLY GROUNDED AND CONFORM TO I.E.C., N.E.C., C.E.C., NATIONAL WIRING REGULATIONS, AND LOCAL CODES AS APPLICABLE.

NOTES

1. CONNECTORS SUITABLE FOR USE WITH COPPER CONDUCTORS ONLY.
2. CONNECT FIELD WIRING IN GROUNDED RAIN TIGHT CONDUIT TO FUSED DISCONNECT.
3. CONNECT FIELD WIRE TO COMPRESSOR CONTACTOR (CC1).
4. REMOVE J3 AT (CC1) TO INSTALL LOW AMBIENT ACCESSORY.
5. IF REQUIRED, ATTACH CRANKCASE HEATER ACCESSORY TO CC1 (L1) AND CC1 (L2).
6. COMPRESSOR MOTOR THERMALLY PROTECTED. ALL 3 PHASE MODELS ARE PROTECTED UNDER PRIMARY SINGLE PHASE CONDITIONS.
7. TRANSFORMER FACTORY WIRED AS SHOWN BELOW. CHANGE PRIMARY VOLTAGE CONNECTIONS FOR ALTERNATE VOLTAGES, IF REQUIRED.

UNIT VOLTAGES - HZ	TRANSFORMER TERM.
200-220 - 50HZ	200
208 - 60HZ	230
230 - 60HZ	230
380 - 60HZ	400
380-415 - 50HZ	400
460 - 60HZ	460
575 - 60HZ	230

8. LOW VOLTAGE CIRCUIT IS N.E.C. CLASS 2 WITH A CLASS 2 TRANSFORMER, 24VAC, 50/60 HZ SUPPLIED.
9. MOTOR FACTORY WIRED FOR CORRECT VOLTAGE.
10. REMOVE PL24 FOR ECONOMIZER ACCESSORY. PL22 AND PL24 LOCATED IN RETURN AIR SECTION.

COMPONENT CODES

BC	BLOWER CONTACTOR
CA	COMFORT ALERT MODULE
CC	COMPRESSOR CONTACTOR
CCH	CRANKCASE HEATER
CDS	CLOGGED DRAIN SENSOR
CFS	CLOGGED FILTER SWITCH
COMP	COMPRESSOR
CT	CONTROL TRANSFORMER
DAT	DISCHARGE AIR SENSOR
DISC	DISCONNECT SWITCH
FLMS	FLAME SENSOR
FP	FAN PROVING
FS	FREEZE SENSOR
GFCO	GROUND FAULT CONVENIENCE OUTLET
GL	GROUND LUG
GND	GROUND
HPC	HIGH PRESSURE CONTROL
IBM	INDOOR BLOWER MOTOR
IDM	INDUCED DRAFT MOTOR
IFC	INTEGRATED FURNACE CONTROL
LAC	LOW AMBIENT CONTROL
LPC	LOW PRESSURE CONTROL
MAS	MIXED AIR SENSOR
MLC	MAIN LIMIT CONTROL
MRLC	MANUAL RESET LIMIT CONTROL
NPC	NEGATIVE PRESSURE SWITCH
OAT	OUTSIDE AIR SENSOR
OFM	OUTDOOR FAN MOTOR
PL	PLUG
PT	POWER TRANSFORMER
RAT	RETURN AIR SENSOR
RC	RUN CAPACITOR
RTU-C	ROOFTOP UNIT CONTROL
SE	SPARK ELECTRODE

WIRE COLOR CODE

BK.....BLACK
BR.....BROWN
BL.....BLUE
G.....GREEN
G Y .....GRAY
O.....ORANGE
PR.....PURPLE
R.....RED
W .....WHITE
Y.....YELLOW

ELECTRICAL WIRING SCHEMATIC

GE DDC 1 STG 090/102/120
208/230/380/460V, 3PH, 60HZ

GE DDC 1 STG 072/090/102
380-415V, 3PH, 50HZ

APPROVED:	CHECKED:	ORIGINAL RELEASE NO.:
MODELED BY: TEW	DATE: 10-24-17	R-1071S108
PART NO.: 90-106178-02		REV: 01

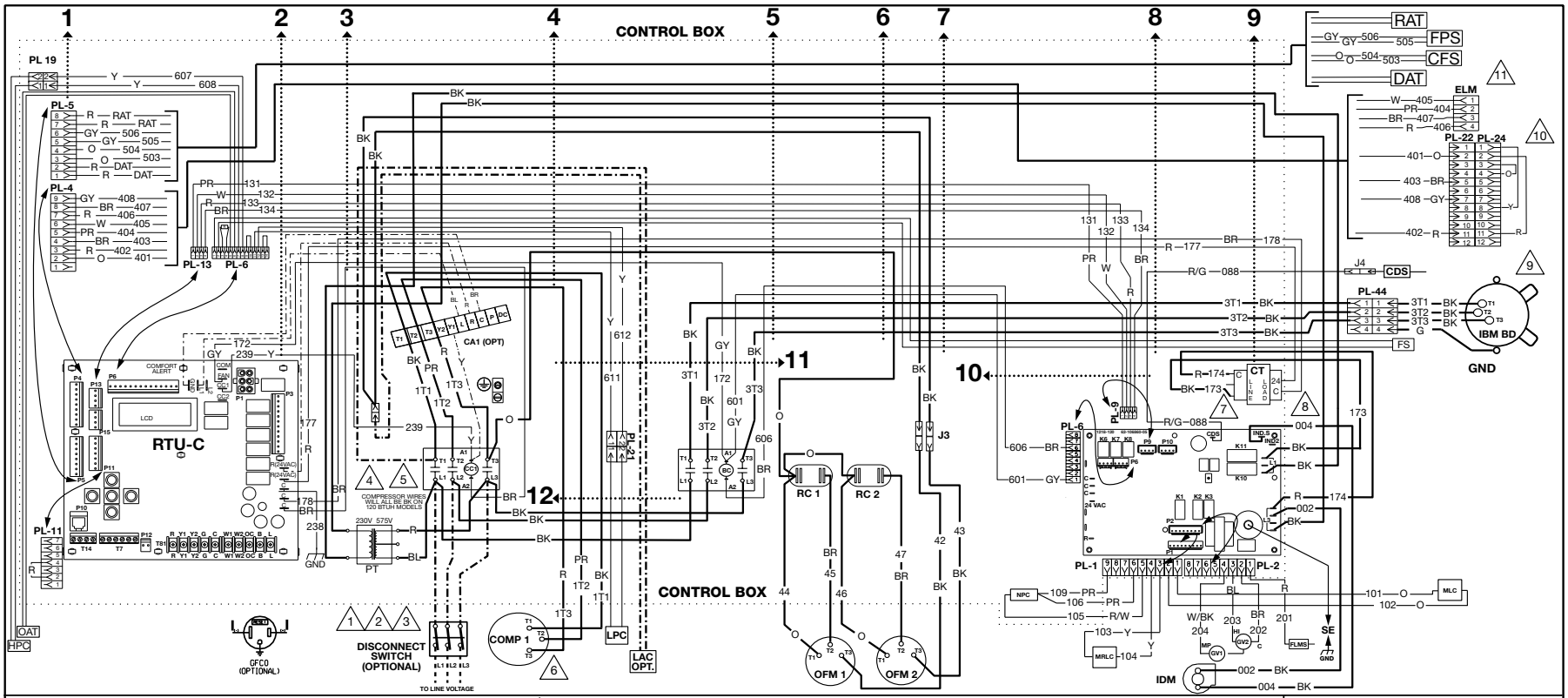

WIRING INFORMATION

LINE VOLTAGE
-FACTORY STANDARD
-FACTORY OPTION
-FIELD INSTALLED

LOW VOLTAGE
-FACTORY STANDARD
-FACTORY OPTION
-FIELD INSTALLED

REPLACEMENT WIRE
-MUST BE THE SAME SIZE AND TYPE OF INSULATION AS ORIGINAL(105ºC.MIN.)

WARNING
-CABINET MUST BE PERMANE NTLY GROUNDED AND CONFORM TO I.E.C., N.E.C., C.E.C., NATIONAL WIRING REGULATIONS, AND LOCAL CODES A S APPLICABLE.

NOTES

1. CONNECTORS SUITABLE FOR USE WITH COPPER CONDUCTORS ONLY.
2. CONNECT FIELD WIRING IN GROUNDED RAIN TIGHT CONDUIT TO FUSED DISCONNECT.
3. CONNECT FIELD WIRE TO COMPRESSOR CONTACTOR (CC1).
4. REMOVE J3 AT (CC1) TO INSTALL LOW AMBIENT ACCESSORY.
5. IF REQUIRED, ATTACH CRANKCASE HEATER ACCESSORY TO CC1 (L1) AND CC1 (L2).
6. COMPRESSOR MOTOR THERMALLY PROTECTED. ALL 3 PHASE MODELS ARE PROTECTED UNDER PRIMARY SINGLE PHASE CONDITIONS.
7. TRANSFORMER FACTORY WIRED AS SHOWN BELOW. CHANGE PRIMARY VOLTAGE CONNECTION FOR ALTERNATE VOLTAGES, IF REQUIRED.

UNIT VOLTAGES –HZ	TRANSFORMER TERM.
200-220 –50 HZ	200
208 –60 HZ	230
230 –60 HZ	230
380 –60 HZ	400
380-415 -50 HZ	400
460 –60 HZ	460
575 –60 HZ	230

8. LOW VOLTAGE CIRCUIT IS N.E.C. CLASS 2 WITH A CLASS 2 TRANSFORMER, 24VAC 50/60 HZ SUPPLIED.
9. MOTOR FACTORY WIRED FOR CORRECT VOLTAGE.
10. REMOVE PL24 FOR ECONOMIZER ACCESSORY. PL22 AND PL24 LOCATED IN RETURN AIR SECTION.
11. CONNECT TO ECONOMIZER LOGIC MODULE.

COMPONENT CODES

BC	BLOWER CONTACTOR
CA	COMFORT ALERT MODULE
CC	COMPRESSOR CONTACTOR
CCH	CRANKCASE HEATER
CDS	CLOG DRAIN SENSOR
CFS	CLOGGED FILTER SWITCH
COMP	COMPRESSOR
CT	CONTROL TRANSFORMER
DAT	DISCHARGE AIR SENSOR
DISC	DISCONNECT SWITCH
ELM	ECONOMIZER LOGIC MODULE
FLMS	FLAME SENSOR
FP	FAN PROVING SWITCH
FS	FREEZE SENSOR
FT	FREEZE STAT
GFCO	GROUND FAULT CONVENIENCE OUTLET
GL	GROUND LUG
GND	GROUND
GV	GAS VALVE
HPC	HIGH PRESSURE CONTROL
IBM	INDOOR BLOWER MOTOR
IDM	INDUCED DRAFT MOTOR
IFC	INTEGRATED FURNACE CONTROL
J	JUMPER
LAC	LOW AMBIENT CONTROL
LPC	LOW PRESSURE CONTROL
MLC	MAIN LIMIT CONTROL
MRLC	MANUAL RESET LIMIT CONTROL
NPC	NEGATIVE PRESSURE SWITCH
OAT	OUTSIDE AIR SENSOR
OFM	OUTDOOR FAN MOTOR
PL	PLUG
PT	POWER TRANSFORMER
RAT	RETURN AIR SENSOR
RC	RUN CAPACITOR
RTU-C	ROOFTOP UNIT CONTROL
SE	SPARK ELECTRODE
##	WIRE TIES

WIRE COLOR CODE

BK.....BLACK	G.....GREEN	PR.....PURPLE
BR.....BROWN	GY.....GRAY	R.....RED
BL.....BLUE	O.....ORANGE	W.....WHITE
		Y.....YELLOW

ELECTRICAL WIRING DIAGRAM

GE DDC 1-STG 090/102/120
575V, 3PH, 60HZ

APPROVED:	CHECKED:	ORIGINAL RELEASE NO.:
MODELED BY: TCJW	DATE: 10-24-17	R-1071S108
PART NO.: 90-106177-03		REV: 01

FIGURE 26

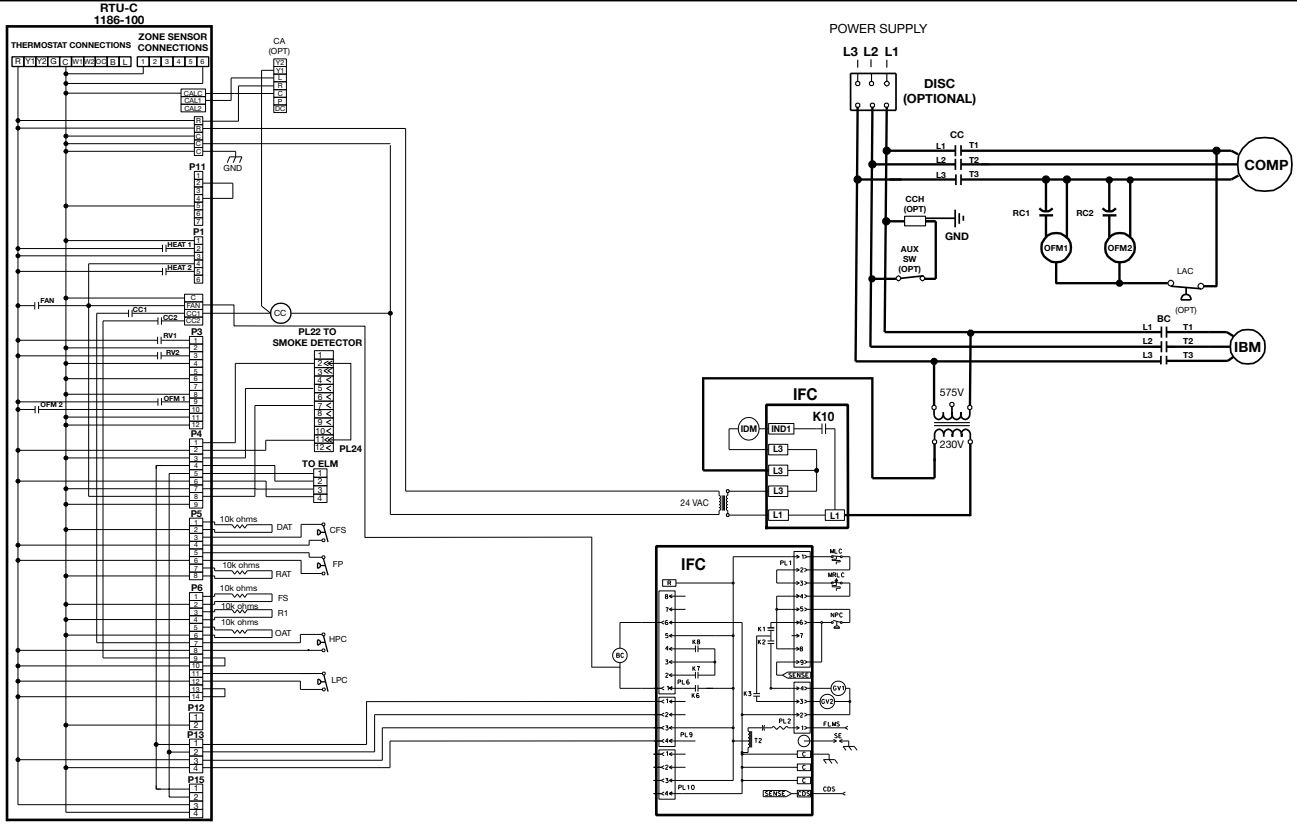

ALARM CODES

CODE	Description	FAULT LEVEL ~0,1,2,3*
0	STANDBY	0
c	COMPRESSOR ON – Low (Flashing if in time delay)	0
C	COMPRESSOR ON – High (Flashing if in time delay)	0
E	Economizer Cooling – No Compressor	0
F	CONTINUOUS FAN	0
h	HEAT ON – Low Stage	0
H	GAS HEAT ON – High Stage	0
4	Comfort Alert Code 4 for Compressor Circuit 1	3
5	Comfort Alert Code 5 for Compressor Circuit 1	3
6	Comfort Alert Code 6 for Compressor Circuit 1	3
7	Comfort Alert Code 7 for Compressor Circuit 1	3
8	Comfort Alert Code 8 for Compressor Circuit 1	3
9	Comfort Alert Code 9 for Compressor Circuit 1	3
11	FAILED IGNITION	2
12	LO FLAME SENSE	1
13	FLAME LOST	2
14	UNEXPECTED FLAME	3
15	2nd Stage Gas valve improper voltage	2
20	REFRIGERANT LOW PRESSURE SWITCH OPEN – CIRCUIT 1	2
21	REFRIGERANT LOW PRESSURE SWITCH OPEN – CIRCUIT 2	2
22	MAIN LIMIT OPEN	2
29	REFRIGERANT HIGH PRESSURE SWITCH OPEN – CIRCUIT 1	2
30	REFRIGERANT HIGH PRESSURE SWITCH OPEN – CIRCUIT 2	2
33	MRLC (Rollout Limit) OPEN	2
34	Comfort Alert Code 4 for Compressor Circuit 2	3
35	Comfort Alert Code 5 for Compressor Circuit 2	3
36	Comfort Alert Code 6 for Compressor Circuit 2	3
37	Comfort Alert Code 7 for Compressor Circuit 2	3
38	Comfort Alert Code 8 for Compressor Circuit 2	3
39	Comfort Alert Code 9 for Compressor Circuit 2	3
42	Invalid Thermostat Selection	1
44	1st Stage COMBUSTION PRESS SWITCH CLOSED	2
46	1st Stage COMBUSTION PRESS SWITCH OPEN	2
49	FREEZE SWITCH OPEN – CIRCUIT 1	2
50	FREEZE SWITCH OPEN -CIRCUIT 2	2
55	2nd Stage COMBUSTION PRESS SWITCH CLOSED	2
57	2nd Stage COMBUSTION PRESS SWITCH OPEN	2,3
59	Condensate Drain Plugged	3
61	Blower Fault – NO RUN	3
83	Condenser Coil Temp Sensor Fail-OCT	2
84	Outdoor Air Temperature Sensor Fail-OAT	2
88	Emergency Stop Fault	3
93	CONTROL Fault	3
97	Smoke Detection	3

*Fault levels:0 = none, 1=warning, 2= problem, 3=shutdown

WIRING INFORMATION

LINE VOLTAGE
-FACTORY STANDARD
-FACTORY OPTION
-FIELD INSTALLED

LOW VOLTAGE
-FACTORY STANDARD
-FACTORY OPTION
-FIELD INSTALLED

REPLACEMENT WIRE
-MUST BE THE SAME SIZE AND TYPE OF INSULATION AS ORIGINAL (105°C MIN.)

WARNING
-CABINET MUST BE PERMANENTLY GROUNDED AND CONFORM TO I.E.C., N.E.C., C.E.C., NATIONAL WIRING REGULATIONS, AND LOCAL CODES AS APPLICABLE.

NOTES

1. CONNECTORS SUITABLE FOR USE WITH COPPER CONDUCTORS ONLY.
2. CONNECT FIELD WIRING IN GROUNDED RAIN TIGHT CONDUIT TO FUSED DISCONNECT.
3. CONNECT FIELD WIRE TO COMPRESSOR CONTACTOR (CC1).
4. REMOVE J3 AT (CC1) TO INSTALL LOW AMBIENT ACCESSORY.
5. IF REQUIRED, ATTACH CRANKCASE HEATER ACCESSORY TO CC1 (L1) AND CC1 (L2).
6. COMPRESSOR MOTOR THERMALLY PROTECTED. ALL 3 PHASE MODELS ARE PROTECTED UNDER PRIMARY SINGLE PHASE CONDITIONS.
7. TRANSFORMER FACTORY WIRED AS SHOWN BELOW. CHANGE PRIMARY VOLTAGE CONNECTIONS FOR ALTERNATE VOLTAGES, IF REQUIRED.

UNIT VOLTAGES - HZ	TRANSFORMER TERM.
200-220 - 50HZ	200
208 - 60HZ	230
230 - 60HZ	230
380 - 60HZ	400
380-415 - 50HZ	400
460 - 60HZ	460
575 - 60HZ	230

8. LOW VOLTAGE CIRCUIT IS N.E.C. CLASS 2 WITH A CLASS 2 TRANSFORMER, 24VAC, 50/60 HZ SUPPLIED.
9. MOTOR FACTORY WIRED FOR CORRECT VOLTAGE.
10. REMOVE PL24 FOR ECONOMIZER ACCESSORY. PL22 AND PL24 LOCATED IN RETURN AIR SECTION.

COMPONENT CODES

BC	BLOWER CONTACTOR
CA	COMFORT ALERT MODULE
CC	COMPRESSOR CONTACTOR
CCH	CRANKCASE HEATER
CDS	CLOGGED DRAIN SENSOR
CFS	CLOGGED FILTER SWITCH
COMP	COMPRESSOR
CT	CONTROL TRANSFORMER
DAT	DISCHARGE AIR SENSOR
DISC	DISCONNECT SWITCH
FLMS	FLAME SENSOR
FP	FAN PROVING
FS	FREEZE SENSOR
GFCO	GROUND FAULT CONVENIENCE OUTLET
GL	GROUND LUG
GND	GROUND
HPC	HIGH PRESSURE CONTROL
IBM	INDOOR BLOWER MOTOR
IDM	INDUCED DRAFT MOTOR
IFC	INTEGRATED FURNACE CONTROL
LAC	LOW AMBIENT CONTROL
LPC	LOW PRESSURE CONTROL
MAS	MIXED AIR SENSOR
MLC	MAIN LIMIT CONTROL
MRLC	MANUAL RESET LIMIT CONTROL
NPC	NEGATIVE PRESSURE SWITCH
OAT	OUTSIDE AIR SENSOR
OFM	OUTDOOR FAN MOTOR
PL	PLUG
PT	POWER TRANSFORMER
RAT	RETURN AIR SENSOR
RC	RUN CAPACITOR
RTU-C	ROOFTOP UNIT CONTROL
SE	SPARK ELECTRODE

WIRE COLOR CODE

BK.....BLACK
BR.....BROWN
BL.....BLUE
G.....GREEN
GY .....GRAY
O.....ORANGE
PR.....PURPLE
R.....RED
W .....WHITE
Y .....YELLOW

ELECTRICAL WIRING SCHEMATIC

GE DDC 1-STG 090/102/120
575V, 3PH, 60HZ

APPROVED:	CHECKED:	ORIGINAL RELEASE NO.:
MODELED BY: TCJW	DATE: 10-25-17	R-1071S108
PART NO.: 90-106178-03		REV: 01

FIGURE 27

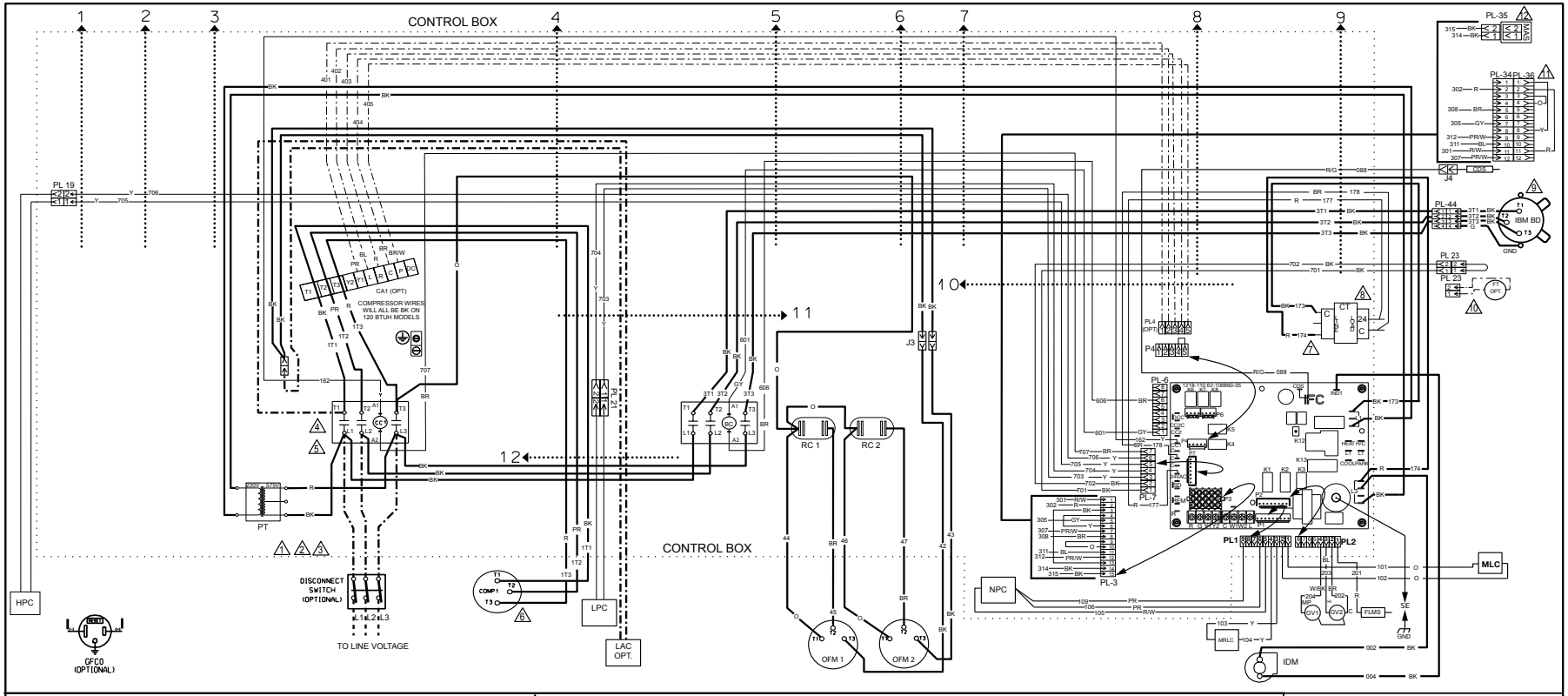

WIRING INFORMATION

LINE VOLTAGE
- -FACTORY STANDARD
- -FACTORY OPTION
- -FIELD INSTALLED

LOW VOLTAGE
- -FACTORY STANDARD
- -FACTORY OPTION
- -FIELD INSTALLED

REPLACEMENT WIRE
-MUST BE THE SAME SIZE AND TYPE OF INSULATIONAS ORIGINAL(105°C.MIN.)

WARNING
-CABINET MUST BE PERMANENTLYGROUNDED AND CONFORM TO I.E.C., N.E.C., C.E.C., NATIONAL WIRING REGULATIONS, AND LOCAL CODES ASAPPLICABLE.

NOTES

1. CONNECTORS SUITABLE FOR USE WITH COPPER CONDUCTORS ONLY.
2. CONNECT FIELD WIRING IN GROUNDED RAIN TIGHT CONDUIT TO FUSED DISCONNECT.
3. CONNECT FIELD WIRE TO COMPRESSOR CONTACTOR (CC1).
4. REMOVE J3 AT (CC1) TO INSTALL LOW AMBIENT ACCESSORY.
5. IF REQUIRED, ATTACH CRANKCASE HEATER ACCESSORY TO CC1 (L1) AND CC1 (L2).
6. COMPRESSOR MOTOR THERMALLY PROTECTED. ALL 3 PHASE MODELS ARE PROTECTED UNDER PRIMARY SINGLE PHASE CONDITIONS.
7. TRANSFORMER FACTORY WIRED AS SHOWN BELOW. CHANGE PRIMARY VOLTAGE CONNECTIONFOR ALTERNATE VOLTAGES, IF REQUIRED.

UNIT VOLTAGES –HZ	TRANSFORMER TERM.
200-220 –50 HZ	230
208 –60 HZ	230
230 –60 HZ	230
380 –60 HZ	400
380-414 -50 HZ	400
460 –60 HZ	460
575 –60 HZ	230

8. LOW VOLTAGE CIRCUIT IS N.E.C. CLASS 2 WITH A CLASS 2 TRANSFORMER, 24VAC 50/60 HZ SUPPLIED.
9. MOTOR FACTORY WIRED FOR CORRECT VOLTAGE.
10. REMOVE PL23 JUMPER FOR OPTIONAL FT LOCATED IN BLOWER COMPARTMENT.
11. REMOVE PL36 FOR ECONOMIZER OR SMOKE DETECTOR ACCESSORY. PL34 AND PL36 LOCATED IN RETURN AIR SECTION.
12. MAS ACCESSORY PROVIDED WITH ECONOMIZER. PL35 LOCATED IN BLOWER COMPARTMENT.

COMPONENT CODES

BC	BLOWER CONTACTOR
CA	COMFORT ALERT MODULE
CC	COMPRESSOR CONTACTOR
CCH	CRANKCASE HEATER
CDS	CLOGGED DRAIN SENSOR
CFS	CLOGGED FILTER SWITCH
COMP	COMPRESSOR
CT	CONTROL TRANSFORMER
DAT	DISCHARGE AIR SENSOR
DISC	DISCONNECT SWITCH
FLMS	FLAME SENSOR
FP	FAN PROVING SWITCH
FS	FREEZE SENSOR
FT	FREEZE STAT
GFCO	GROUND FAULT CONVENIENCE OUTLET
GL	GROUND LUG
GND	GROUND
GV	GAS VALVE
HPC	HIGH PRESSURE CONTROL
IBM BD	INDOOR BLOWER MOTOR BELT DRIVE
IDM	INDUCED DRAFT MOTOR
IFC	INTEGRATED FURNACE CONTROL
J	JUMPER
LAC	LOW AMBIENT CONTROL
LPC	LOW PRESSURE CONTROL
MAS	MIXED AIR SENSOR
MLC	MAIN LIMIT CONTROL
MRLC	MANUAL RESET LIMIT CONTROL
NPC	NEGATIVE PRESSURE SWITCH
OAT	OUTSIDE AIR SENSOR
OFM	OUTDOOR FAN MOTOR
PL	PLUG
PT	POWER TRANSFORMER
RAT	RETURN AIR SENSOR
RC	RUN CAPACITIOR
RTU-C	ROOTOP UNIT CONTROL
SE	SPARK ELECTRODE
##	WIRE TIES

WIRE COLOR CODE

BK.....BLACK	G.....GREEN	PR.....PURPLE
BR.....BROWN	GY.....GRAY	R.....RED
BL.....BLUE	O.....ORANGE	W.....WHITE
		Y.....YELLOW

ELECTRICAL WIRING DIAGRAM

GE NON DDC 1-STG 090/102/120
575V 3PH 60Hz

APPROVED:	CHECKED:	ORIGINAL RELEASE NO.:
MODELED BY: TCJW	DATE: 10-12/2017	R-1071S089
PART NO.: 90-106177-04		REV: 02

FIGURE 28

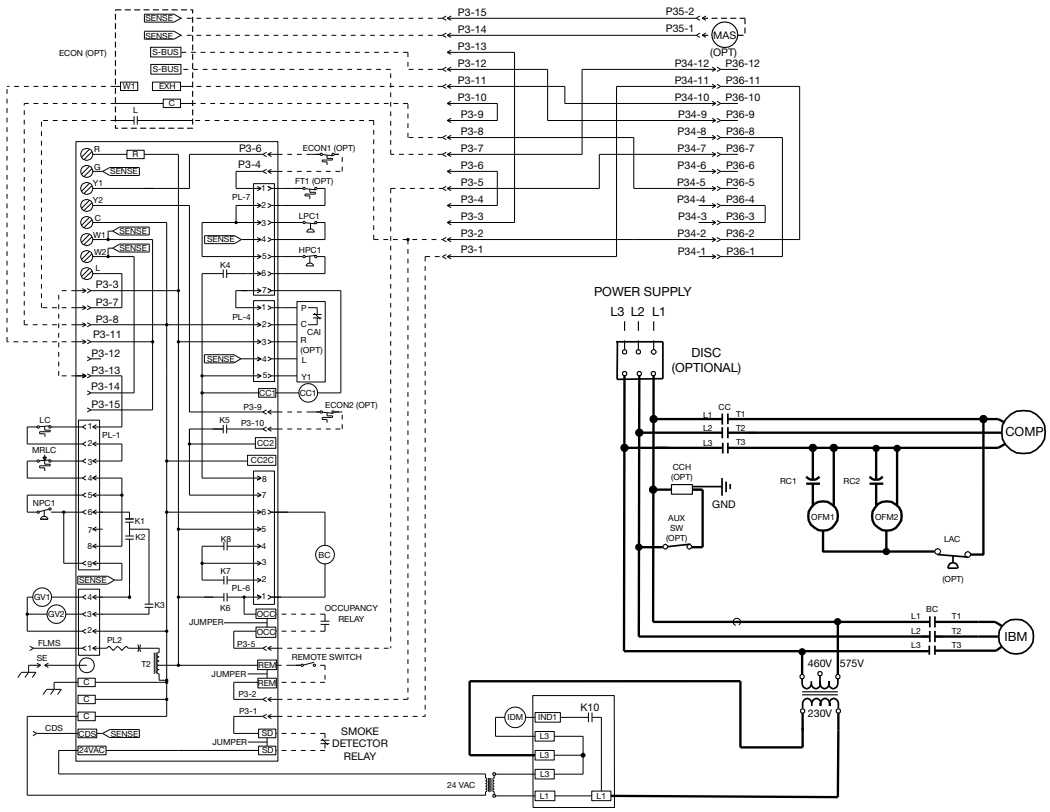

ALARM CODES

CODE	Description	FAULT LEVEL –0,1,2,3*
0	STANDBY	0
c	COMPRESSOR ON – Low (Flashing if in time delay)	0
C	COMPRESSOR ON – High (Flashing if in time delay)	0
E	Economizer Cooling – No Compressor	0
F	CONTINUOUS FAN	0
h	HEAT ON – Low Stage	0
H	GAS HEAT ON – High Stage	0
4	Comfort Alert Code 4 for Compressor Circuit 1	3
5	Comfort Alert Code 5 for Compressor Circuit 1	3
6	Comfort Alert Code 6 for Compressor Circuit 1	3
7	Comfort Alert Code 7 for Compressor Circuit 1	3
8	Comfort Alert Code 8 for Compressor Circuit 1	3
9	Comfort Alert Code 9 for Compressor Circuit 1	3
11	FAILED IGNITION	2
12	LO FLAME SENSE	1
13	FLAME LOST	2
14	UNEXPECTED FLAME	3
15	2nd Stage Gas valve improper voltage	2
20	REFRIGERANT LOW PRESSURE SWITCH OPEN – CIRCUIT 1	2
21	REFRIGERANT LOW PRESSURE SWITCH OPEN – CIRCUIT 2	2
22	MAIN LIMIT OPEN	2
29	REFRIGERANT HIGH PRESSURE SWITCH OPEN – CIRCUIT 1	2
30	REFRIGERANT HIGH PRESSURE SWITCH OPEN – CIRCUIT 2	2
33	MRLC (Rollout Limit) OPEN	2
34	Comfort Alert Code 4 for Compressor Circuit 2	3
35	Comfort Alert Code 5 for Compressor Circuit 2	3
36	Comfort Alert Code 6 for Compressor Circuit 2	3
37	Comfort Alert Code 7 for Compressor Circuit 2	3
38	Comfort Alert Code 8 for Compressor Circuit 2	3
39	Comfort Alert Code 9 for Compressor Circuit 2	3
42	Invalid Thermostat Selection	1
44	1st Stage COMBUSTION PRESS SWITCH CLOSED	2
46	1st Stage COMBUSTION PRESS SWITCH OPEN	2
49	FREEZE SWITCH OPEN – CIRCUIT 1	2
50	FREEZE SWITCH OPEN -CIRCUIT 2	2
55	2nd Stage COMBUSTION PRESS SWITCH CLOSED	2
57	2nd Stage COMBUSTION PRESS SWITCH OPEN	2,3
59	Condensate Drain Plugged	3
61	Blower Fault – NO RUN	3
83	Condenser Coil Temp Sensor Fail-OCT	2
84	Outdoor Air Temperature Sensor Fail-OAT	2
88	Emergency Stop Fault	3
93	CONTROL Fault	3
97	Smoke Detection	3

*Fault levels:0 = none, 1=warning, 2= problem, 3=shutdown

WIRING INFORMATION

LINE VOLTAGE
- FACTORY STANDARD
- FACTORY OPTION
- FIELD INSTALLED

LOW VOLTAGE
- FACTORY STANDARD
- FACTORY OPTION
- FIELD INSTALLED

REPLACEMENT WIRE
-MUST BE THE SAME SIZE AND TYPE OF INSULATION AS ORIGINAL (105°C MIN.)

WARNING
-CABINET MUST BE PERMANENTLY GROUNDED AND CONFORM TO I.E.C., N.E.C., C.E.C., NATIONAL WIRING REGULATIONS, AND LOCAL CODES A S APPLICABLE.

NOTES

1. CONNECTORS SUITABLE FOR USE WITH COPPER CONDUCTORS ONLY.
2. CONNECT FIELD WIRING IN GROUNDED RAIN TIGHT CONDUIT TO FUSED DISCONNECT.
3. CONNECT FIELD WIRE TO COMPRESSOR CONTACTOR (CC1).
4. REMOVE J3 AT (CC1) TO INSTALL LOW AMBIENT ACCESSORY.
5. IF REQUIRED, ATTACH CRANKCASE HEATER ACCESSORY TO CC1 (L1) AND CC1 (L2).
6. COMPRESSOR MOTOR THERMALLY PROTECTED. ALL 3 PHASE MODELS ARE PROTECTED UNDER PRIMARY SINGLE PHASE CONDITIONS.
7. TRANSFORMER FACTORY WIRED AS SHOWN BELOW. CHANGE PRIMARY VOLTAGE CONNECTIONS FOR ALTERNATE VOLTAGES, IF REQUIRED.

UNIT VOLTAGES - HZ	TRANSFORMER TERM.
200-220 - 50HZ	200
208 - 60HZ	230
230 - 60HZ	230
380 - 60HZ	400
380-415 - 50HZ	400
460 - 60HZ	460
575 - 60HZ	230

8. LOW VOLTAGE CIRCUIT IS N.E.C. CLASS 2 WITH A CLASS 2 TRANSFORMER, 24VAC 50/60 HZ SUPPLIED.
9. MOTOR FACTORY WIRED FOR CORRECT VOLTAGE.
10. REMOVE PL36 FOR ECOMOMIZER ACCESSORY. PL34 AND PL36 LOCATED IN RETURN AIR SECTION.
11. CONNECT TO ECONOMIZER LOGIC MODULE.

COMPONENT CODES

BC	BLOWER CONTACTOR
CA	COMFORT ALERT MODULE
CC	COMPRESSOR CONTACTOR
CCH	CRANKCASE HEATER
CDS	CLOG DRAIN SENSOR
CFS	CLOGGED FILTER SWITCH
COMP	COMPRESSOR
CT	CONTROL TRANSFORMER
DAT	DISCHARGE AIR ESENSOR
DISC	DISCONNECT SWITCH
ELM	ECONOMIZER LOGIC MODULE
FLMS	FLAME SENSOR
FP	FAN PROVING
FS	FREEZE SENSOR
FT	FREEZE STAT
GFCO	GROUND FAULT CONVENIENCE OUTLET
GL	GROUND LUG
GND	GROUND
HPC	HIGH PRESSURE CONTROL
IBM	INDOOR BLOWER MOTOR
IDM	INDUCED DRAFT MOTOR
IFC	INTEGRATED FURNACE CONTROL
LAC	LOW AMBIENT CONTROL
LPC	LOW PRESSURE CONTROL
MRLC	MANUAL RESET LIMIT CONTROL
NPC	NEGATIVE PRESSURE SWITCH
OAT	OUTSIDE AIR SENSOR
OFM	OUTDOOR FAN MOTOR
PL	PLUG
PT	POWER TRANSFORMER
RAT	RETURN AIR SENSOR
RC	RUN CAPACITOR
RTU-C	ROOFTOP UNIT CONTROL
SE	SPARK ELECTRODE
TB	TERMINAL BLOCK

WIRE COLOR CODE

BK.....BLACK	G.....GREEN	PR.....PURPLE
BR.....BROWN	GY.....GRAY	R.....RED
BL.....BLUE	O.....ORANGE	W .....WHITE
		Y.....YELLOW

ELECTRICAL WIRING SCHEMATIC

GE NON DDC 1-STG 090/102/120
575V 3PH 60Hz

APPROVED:	CHECKED:	ORIGINAL RELEASE NO.:
MODELED BY: TCJW	DATE: 10-18-17	R-1071S089
PART NO.: 90-106178-04		REV: 03

FIGURE 29

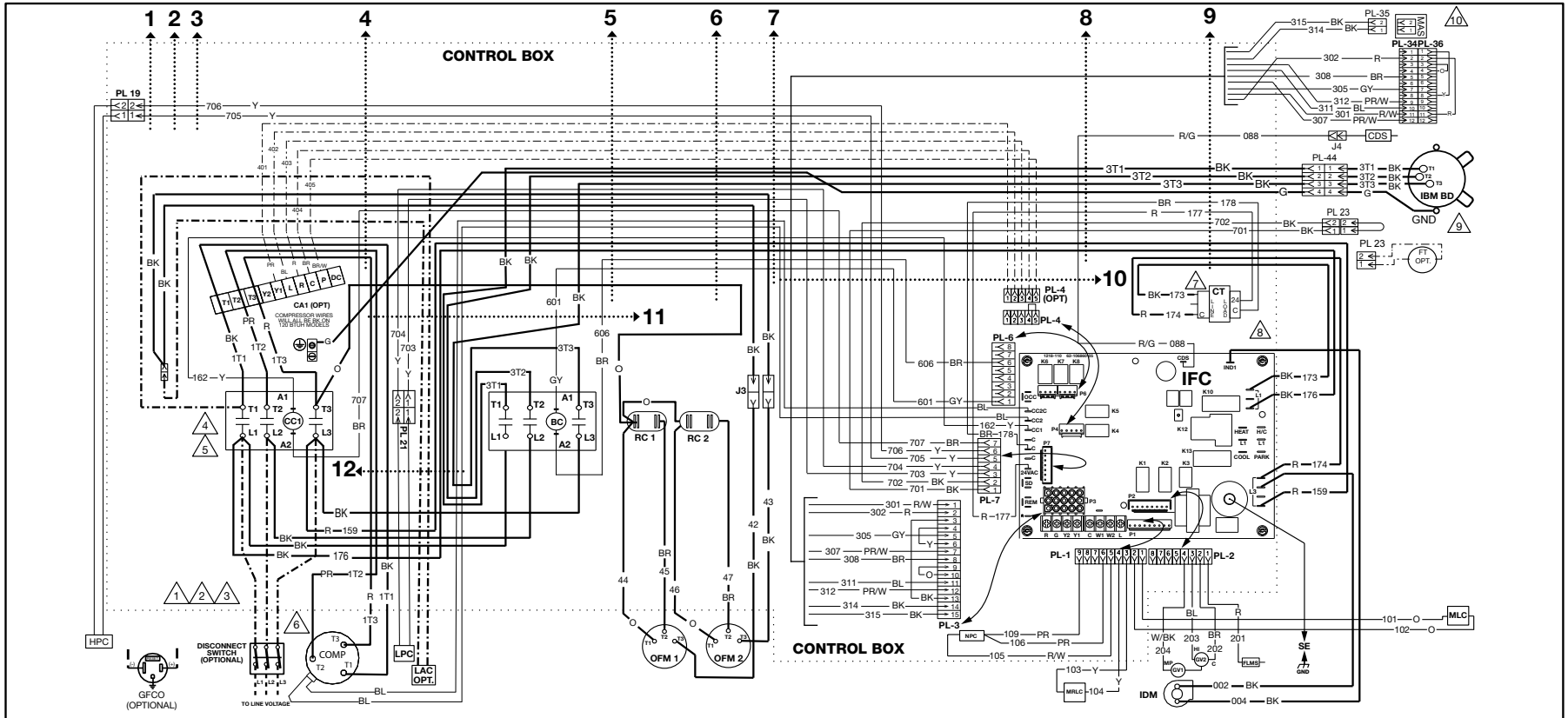

WIRING INFORMATION

LINE VOLTAGE
- -FACTORY STANDARD
- -FACTORY OPTION
- -FIELD INSTALLED

LOW VOLTAGE
- -FACTORY STANDARD
- -FACTORY OPTION
- -FIELD INSTALLED

REPLACEMENT WIRE
-MUST BE THE SAME SIZE AND TYPE OF I NSULATION AS ORIGINAL (105°C MIN.)

WARNING
-CABINET MUST BE PERMANE NTLY GROUNDED AND CONFORM TO I.E.C., N.E.C., C.E.C., NATIONAL WIRING REGULATIONS, AND LOCAL CODES A S APPLICABLE.

NOTES

1. CONNECTORS SUITABLE FOR USE WITH COPPER CONDUCTORS ONLY.
2. CONNECT FIELD WIRING IN GROUNDED RAIN TIGHT CONDUIT TO FUSED DISCONNECT.
3. CONNECT FIELD WIRE TO COMPRESSOR CONTACTOR (CC1).
4. REMOVE J3 AT (CC1) TO INSTALL LOW AMBIENT ACCESSORY.
5. IF REQUIRED, ATTACH CRANKCASE HEATER ACCESSORY TO CC1 (L1) AND CC1 (L2).
6. COMPRESSOR MOTOR THERMALLY PROTECTED. ALL 3 PHASE MODELS ARE PROTECTED UNDER PRIMARY SINGLE PHASE CONDITIONS.
7. TRANSFORMER FACTORY WIRED AS SHOWN BELOW. CHANGE PRIMARY VOLTAGE CONNECTIONS FOR ALTERNATE VOLTAGES, IF REQUIRED.

UNIT VOLTAGES - HZ	TRANSFORMER TERM.
200-220 - 50HZ	200
208 - 60HZ	230
230 - 60HZ	230
380 - 60HZ	400
380-415 - 50HZ	400
460 - 60HZ	460
575 - 60HZ	230

8. LOW VOLTAGE CIRCUIT IS N.E.C. CLASS 2 WITH A CLASS 2 TRANSFORMER, 24VAC, 50/60 HZ SUPPLIED.
9. MOTOR FACTORY WIRED FOR CORRECT VOLTAGE.
10. REMOVE PL36 FOR ECONOMIZER ACCESSORY. PL34 AND PL36 LOCATED IN RETURN AIR SECTION.

COMPONENT CODES

BC	BLOWER CONTACTOR
CA	COMFORT ALERT MODULE
CC	COMPRESSOR CONTACTOR
CCH	CRANKCASE HEATER
CDS	CLOGGED DRAIN SENSOR
CFS	CLOGGED FILTER SWITCH
COMP	COMPRESSOR
CT	CONTROL TRANSFORMER
DAT	DISCHARGE AIR SENSOR
DISC	DISCONNECT SWITCH
FLMS	FLAME SENSOR
FP	FAN PROVING SWITCH
FS	FREEZE SENSOR
GFCO	GROUND FAULT CONVENIENCE OUTLET
GL	GROUND LUG
GND	GROUND
GV	GAS VALVE
HPC	HIGH PRESSURE CONTROL
IBM	INDOOR BLOWER MOTOR
IDM	INDUCED DRAFT MOTOR
IFC	INTEGRATED FURNACE CONTROL
J	JUMPER
LAC	LOW AMBIENT CONTROL
LPC	LOW PRESSURE CONTROL
MAS	MIXED AIR SENSOR
MLC	MAIN LIMIT CONTROL
MRLC	MANUAL RESET LIMIT CONTROL
NPC	NEGATIVE PRESSURE SWITCH
OAT	OUTSIDE AIR SENSOR
OFM	OUTDOOR FAN MOTOR
PL	PLUG
PT	POWER TRANSFORMER
RAT	RETURN AIR SENSOR
RC	RUN CAPACITOR
RTU-C	ROOFTOP UNIT CONTROL
SE	SPARK ELECTRODE
##	WIRE TIE

WIRE COLOR CODE

BK.....BLACK	G.....GREEN	PR.....PURPLE
BR.....BROWN	GY .....GRAY	R.....RED
BL.....BLUE	O.....ORANGE	W .....WHITE
		Y .....YELLOW

ELECTRICAL WIRING DIAGRAM

GE NON DDC 2-STG 090/102/120
208/230/460V 3 PH 60 Hz

APPROVED:	CHECKED:	ORIGINAL RELEASE NO.:
MODELED BY: TCJW	DATE: 10-26-17	R-1071S108
PART NO.: 90-106177-05		REV: 02

FIGURE 30

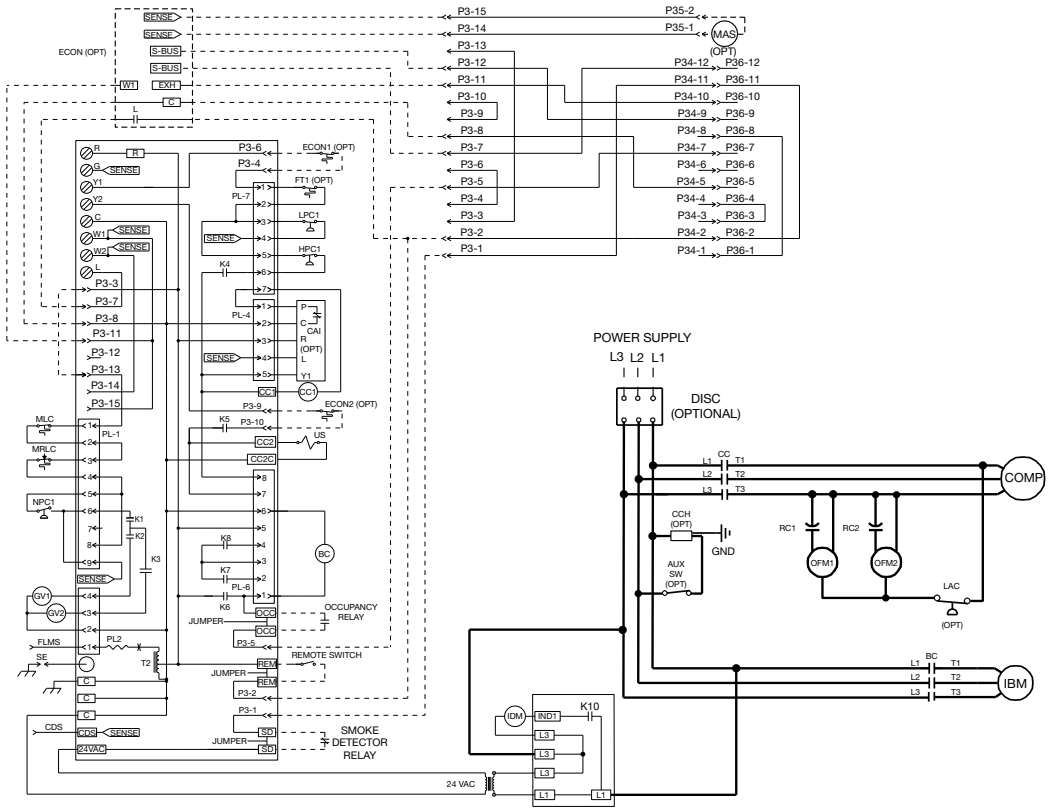

ALARM CODES

CODE	Description	FAULT LEVEL – 0,1,2,3*
0	STANDBY	0
c	COMPRESSOR ON – Low (Flashing if in time delay)	0
C	COMPRESSOR ON – High (Flashing if in time delay)	0
E	Economizer Cooling – No Compressor	0
F	CONTINUOUS FAN	0
h	HEAT ON – Low Stage	0
H	GAS HEAT ON – High Stage	0
4	Comfort Alert Code 4 for Compressor Circuit 1	3
5	Comfort Alert Code 5 for Compressor Circuit 1	3
6	Comfort Alert Code 6 for Compressor Circuit 1	3
7	Comfort Alert Code 7 for Compressor Circuit 1	3
8	Comfort Alert Code 8 for Compressor Circuit 1	3
9	Comfort Alert Code 9 for Compressor Circuit 1	3
11	FAILED IGNITION	2
12	LO FLAME SENSE	1
13	FLAME LOST	2
14	UNEXPECTED FLAME	3
15	2nd Stage Gas valve improper voltage	2
20	REFRIGERANT LOW PRESSURE SWITCH OPEN – CIRCUIT 1	2
21	REFRIGERANT LOW PRESSURE SWITCH OPEN – CIRCUIT 2	2
22	MAIN LIMIT OPEN	2
29	REFRIGERANT HIGH PRESSURE SWITCH OPEN – CIRCUIT 1	2
30	REFRIGERANT HIGH PRESSURE SWITCH OPEN – CIRCUIT 2	2
33	MRLC (Rollout Limit) OPEN	2
34	Comfort Alert Code 4 for Compressor Circuit 2	3
35	Comfort Alert Code 5 for Compressor Circuit 2	3
36	Comfort Alert Code 6 for Compressor Circuit 2	3
37	Comfort Alert Code 7 for Compressor Circuit 2	3
38	Comfort Alert Code 8 for Compressor Circuit 2	3
39	Comfort Alert Code 9 for Compressor Circuit 2	3
42	Invalid Thermostat Selection	1
44	1st Stage COMBUSTION PRESS SWITCH CLOSED	2
46	1st Stage COMBUSTION PRESS SWITCH OPEN	2
49	FREEZE SWITCH OPEN – CIRCUIT 1	2
50	FREEZE SWITCH OPEN -CIRCUIT 2	2
55	2nd Stage COMBUSTION PRESS SWITCH CLOSED	2
57	2nd Stage COMBUSTION PRESS SWITCH OPEN	2,3
59	Condensate Drain Plugged	3
61	Blower Fault – NO RUN	3
83	Condenser Coil Temp Sensor Fail-OCT	2
84	Outdoor Air Temperature Sensor Fail-OAT	2
88	Emergency Stop Fault	3
93	CONTROL Fault	3
97	Smoke Detection	3

*Fault levels:0 = none, 1=warning, 2= problem, 3=shutdown

WIRING INFORMATION

LINE VOLTAGE
- -FACTORY STANDARD
- -FACTORY OPTION
- -FIELD INSTALLED

LOW VOLTAGE
- -FACTORY STANDARD
- -FACTORY OPTION
- -FIELD INSTALLED

REPLACEMENT WIRE
-MUST BE THE SAME SIZE AND TYPE OF I NSULATION AS ORIGINAL (105ºC MIN.)

WARNING
-CABINET MUST BE PERMANE NTLY GROUNDED AND CONFORM TO I.E.C., N.E.C., C.E.C., NATIONAL WIRING REGULATIONS, AND LOCAL CODES A S APPLICABLE.

NOTES

1. CONNECTORS SUITABLE FOR USE WITH COPPER CONDUCTORS ONLY.
2. CONNECT FIELD WIRING IN GROUNDED RAIN TIGHT CONDUIT TO FUSED DISCONNECT.
3. CONNECT FIELD WIRE TO COMPRESSOR CONTACTOR (CC1).
4. REMOVE J3 AT (CC1) TO INSTALL LOW AMBIENT ACCESSORY.
5. IF REQUIRED, ATTACH CRANKCASE HEATER ACCESSORY TO CC1 (L1) AND CC1 (L2).
6. COMPRESSOR MOTOR THERMALLY PROTECTED. ALL 3 PHASE MODELS ARE PROTECTED UNDER PRIMARY SINGLE PHASE CONDITIONS.
7. TRANSFORMER FACTORY WIRED AS SHOWN BELOW. CHANGE PRIMARY VOLTAGE CONNECTIONS FOR ALTERNATE VOLTAGES, IF REQUIRED.

UNIT VOLTAGES - HZ	TRANSFORMER TERM.
200-220 - 50HZ	200
208 - 60HZ	230
230 - 60HZ	230
380 - 60HZ	400
380-415 - 50HZ	400
460 - 60HZ	460
575 - 60HZ	230

8. LOW VOLTAGE CIRCUIT IS N.E.C. CLASS 2 WITH A CLASS 2 TRANSFORMER, 24VAC, 50/60 HZ SUPPLIED.
9. MOTOR FACTORY WIRED FOR CORRECT VOLTAGE.
10. REMOVE PL36 FOR ECONOMIZER ACCESSORY. PL34 AND PL36 LOCATED IN RETURN AIR SECTION.

COMPONENT CODES

BC	BLOWER CONTACTOR
CA	COMFORT ALERT MODULE
CC	COMPRESSOR CONTACTOR
CCH	CRANKCASE HEATER
CDS	CLOGGED DRAIN SENSOR
CFS	CLOGGED FILTER SWITCH
COMP	COMPRESSOR
CT	CONTROL TRANSFORMER
DAT	DISCHARGE AIR SENSOR
DISC	DISCONNECT SWITCH
FLMS	FLAME SENSOR
FP	FAN PROVING
FS	FREEZE SENSOR
GFCO	GROUND FAULT CONVENIENCE OUTLET
GL	GROUND LUG
GND	GROUND
HPC	HIGH PRESSURE CONTROL
IBM	INDOOR BLOWER MOTOR
IDM	INDUCED DRAFT MOTOR
IFC	INTEGRATED FURNACE CONTROL
LAC	LOW AMBIENT CONTROL
LPC	LOW PRESSURE CONTROL
MAS	MIXED AIR SENSOR
MLC	MAIN LIMIT CONTROL
MRLC	MANUAL RESET LIMIT CONTROL
NPC	NEGATIVE PRESSURE SWITCH
OAT	OUTSIDE AIR SENSOR
OFM	OUTDOOR FAN MOTOR
PL	PLUG
PT	POWER TRANSFORMER
RAT	RETURN AIR SENSOR
RC	RUN CAPACITOR
RTU-C	ROOFTOP UNIT CONTROL
SE	SPARK ELECTRODE
US	UNLOADER SOLENOID

WIRE COLOR CODE

BK.....BLACK	G.....GREEN	PR.....PURPLE
BR.....BROWN	GY.....GRAY	R.....RED
BL.....BLUE	O.....ORANGE	W .....WHITE
		Y .....YELLOW

ELECTRICAL WIRING SCHEMATIC

GE NON DDC 2-STG 090/102/120
208/230/460V 3 PH 60 Hz

APPROVED:	CHECKED:	ORIGINAL RELEASE NO.:
MODELED BY: TCJW	DATE: 10-27-17	R-1071S108
PART NO.: 90-106178-05		REV: 02

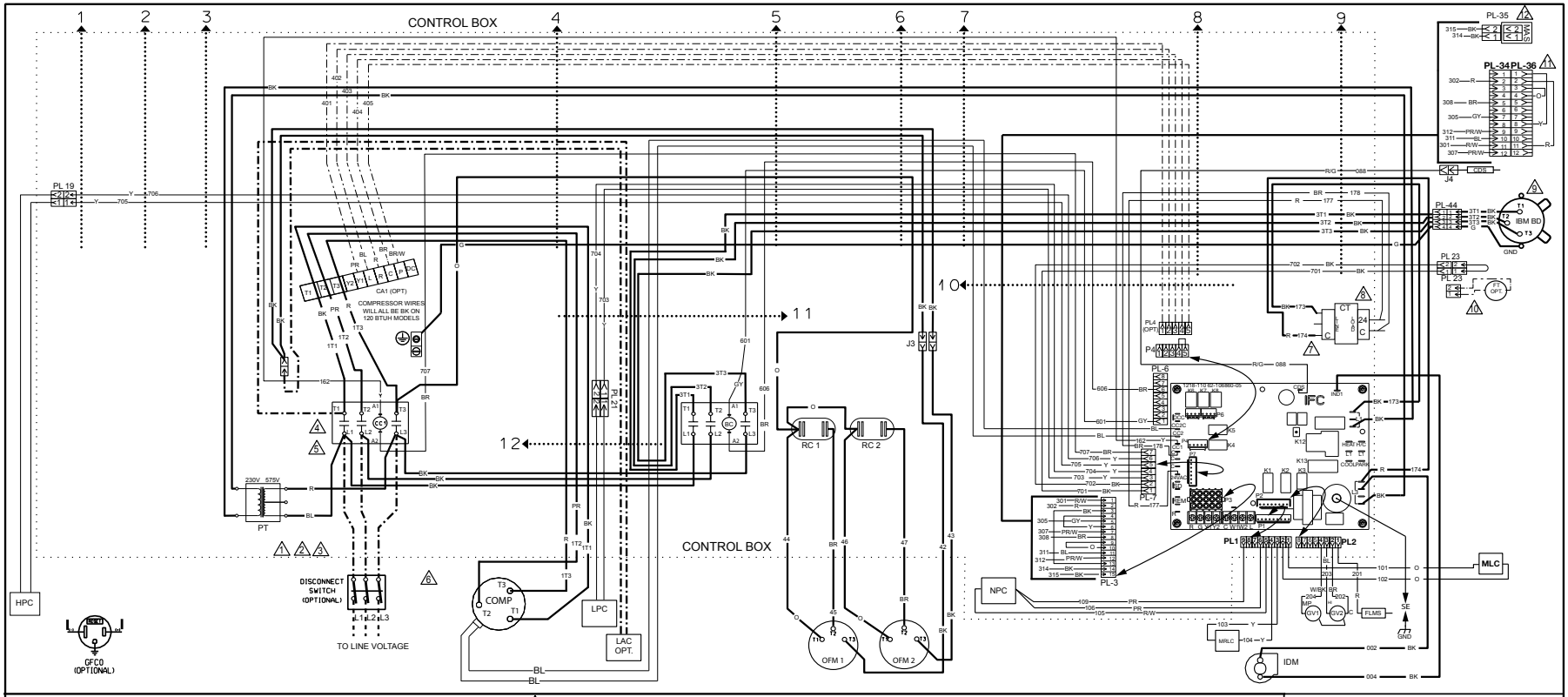

WIRING INFORMATION

LINE VOLTAGE
- -FACTORY STANDARD
- -FACTORY OPTION
- -FIELD INSTALLED

LOW VOLTAGE
- -FACTORY STANDARD
- -FACTORY OPTION
- -FIELD INSTALLED

REPLACEMENT WIRE
-MUST BE THE SAME SIZE AND TYPE OF INSULATION AS ORIGINAL (105°C.MIN.)

WARNING
-CABINET MUST BE PERMANENTLY GROUNDED AND CONFORM TO I.E.C., N.E.C., C.E.C., NATIONAL WIRING REGULATIONS, AND LOCAL CODES AS APPLICABLE.

NOTES

1. CONNECTORS SUITABLE FOR USE WITH COPPER CONDUCTORS ONLY.
2. CONNECT FIELD WIRING IN GROUNDED RAIN TIGHT CONDUIT TO FUSED DISCONNECT.
3. CONNECT FIELD WIRE TO COMPRESSOR CONTACTOR (CC1).
4. REMOVE J3 AT (CC1) TO INSTALL LOW AMBIENT ACCESSORY.
5. IF REQUIRED, ATTACH CRANKCASE HEATER ACCESSORY TO CC1 (L1) AND CC1 (L2).
6. COMPRESSOR MOTOR THERMALLY PROTECTED. ALL 3 PHASE MODELS ARE PROTECTED UNDER PRIMARY SINGLE PHASE CONDITIONS.
7. TRANSFORMER FACTORY WIRED AS SHOWN BELOW. CHANGE PRIMARY VOLTAGE CONNECTIONFOR ALTERNATE VOLTAGES, IF REQUIRED.

UNIT VOLTAGES –HZ	TRANSFORMER TERM.
200-220 –50 HZ	230
208 –60 HZ	230
230 –60 HZ	230
380 –60 HZ	400
380-415 -50 HZ	400
460 –60 HZ	460
575 –60 HZ	230

8. LOW VOLTAGE CIRCUIT IS N.E.C. CLASS 2 WITH A CLASS 2 TRANSFORMER, 24VAC 50/60 HZ SUPPLIED.
9. MOTOR FACTORY WIRED FOR CORRECT VOLTAGE.
10. REMOVE PL23 JUMPER FOR OPTIONAL FT LOCATED IN BLOWER COMPARTMENT.
11. REMOVE PL36 FOR ECONOMIZER OR SMOKE DETECTOR ACCESSORY. PL34 AND PL36 LOCATED IN RETURN AIR SECTION.
12. MAS ACCESSORY PROVIDED WITH ECONOMIZER. PL35 LOCATED IN BLOWER COMPARTMENT.

COMPONENT CODES

BC	BLOWER CONTACTOR
CA	COMFORT ALERT MODULE
CC	COMPRESSOR CONTACTOR
CCH	CRANKCASE HEATER
CDS	CLOGGED DRAIN SENSOR
CFS	CLOGGED FILTER SWITCH
COMP	COMPRESSOR
CT	CONTROL TRANSFORMER
DAT	DISCHARGE AIR SENSOR
DISC	DISCONNECT SWITCH
FLMS	FLAME SENSOR
FP	FAN PROVING SWITCH
FS	FREEZE SENSOR
FT	FREEZE STAT
GFCO	GROUND FAULT CONVENIENCE OUTLET
GL	GROUND LUG
GND	GROUND
GV	GAS VALVE
HPC	HIGH PRESSURE CONTROL
IBM BD	INDOOR BLOWER MOTOR BELT DRIVE
IDM	INDUCED DRAFT MOTOR
IFC	INTEGRATED FURNACE CONTROL
J	JUMPER
LAC	LOW AMBIENT CONTROL
LPC	LOW PRESSURE CONTROL
MAS	MIXED AIR SENSOR
MLC	MAIN LIMIT CONTROL
MRLC	MANUAL RESET LIMIT CONTROL
NPC	NEGATIVE PRESSURE SWITCH
OAT	OUTSIDE AIR SENSOR
OFM	OUTDOOR FAN MOTOR
PL	PLUG
PT	POWER TRANSFORMER
RAT	RETURN AIR SENSOR
RC	RUN CAPACITIOR
RTU-C	ROOTOP UNIT CONTROL
SE	SPARK ELECTRODE
##	WIRE TIES

WIRE COLOR CODE

BK.....BLACK	G.....GREEN	PR.....PURPLE
BR.....BROWN	GY.....GRAY	R.....RED
BL.....BLUE	O.....ORANGE	W.....WHITE
		Y.....YELLOW

ELECTRICAL WIRING DIAGR

GE NON DDC 2-STG 090/102/1
575V 3PH 60Hz

APPROVED:	CHECKED:	ORIGINAL RELEASE NO.:
MODELED BY: TCJW	DATE: 10-30-17	R-1071S108
PART NO.: 90-106177-06		REV: 02

FIGURE 32

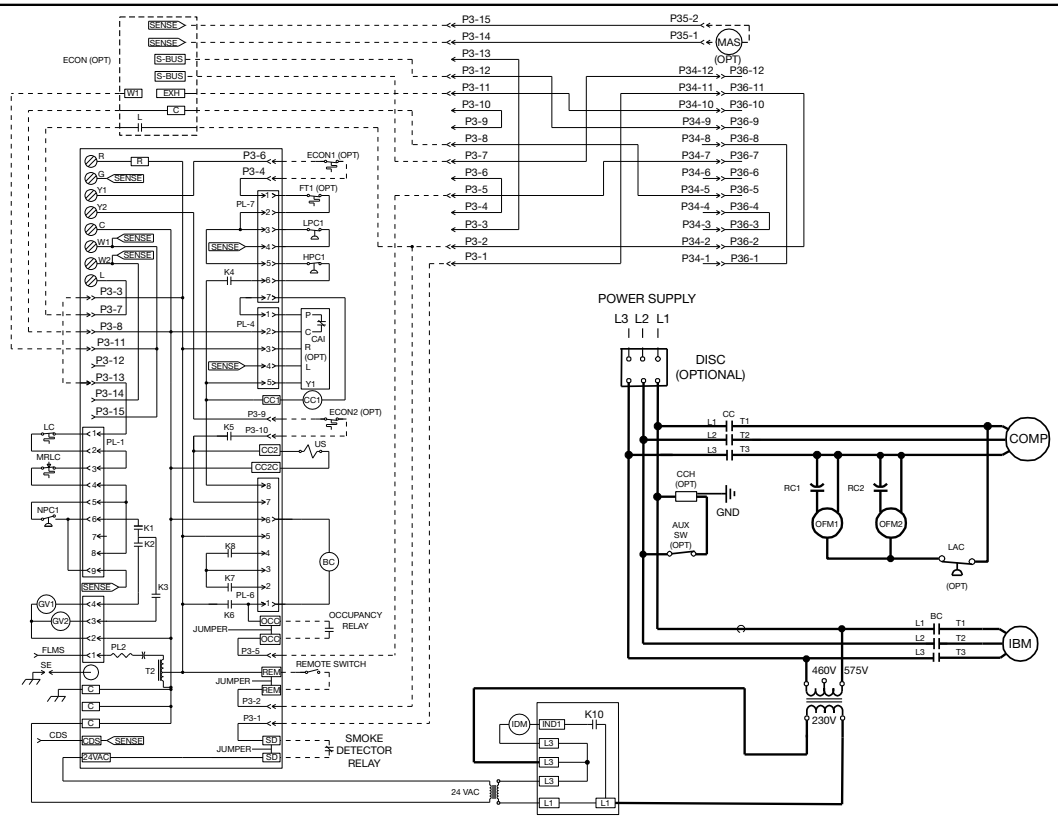

ALARM CODES

CODE	Description	FAULT LEVEL –0,1,2,3*
0	STANDBY	0
c	COMPRESSOR ON – Low (Flashing if in time delay)	0
C	COMPRESSOR ON – High (Flashing if in time delay)	0
E	Economizer Cooling – No Compressor	0
F	CONTINUOUS FAN	0
h	HEAT ON – Low Stage	0
H	GAS HEAT ON – High Stage	0
4	Comfort Alert Code 4 for Compressor Circuit 1	3
5	Comfort Alert Code 5 for Compressor Circuit 1	3
6	Comfort Alert Code 6 for Compressor Circuit 1	3
7	Comfort Alert Code 7 for Compressor Circuit 1	3
8	Comfort Alert Code 8 for Compressor Circuit 1	3
9	Comfort Alert Code 9 for Compressor Circuit 1	3
11	FAILED IGNITION	2
12	LO FLAME SENSE	1
13	FLAME LOST	2
14	UNEXPECTED FLAME	3
15	2nd Stage Gas valve improper voltage	2
20	REFRIGERANT LOW PRESSURE SWITCH OPEN – CIRCUIT 1	2
21	REFRIGERANT LOW PRESSURE SWITCH OPEN – CIRCUIT 2	2
22	MAIN LIMIT OPEN	2
29	REFRIGERANT HIGH PRESSURE SWITCH OPEN – CIRCUIT 1	2
30	REFRIGERANT HIGH PRESSURE SWITCH OPEN – CIRCUIT 2	2
33	MRLC (Rollout Limit) OPEN	2
34	Comfort Alert Code 4 for Compressor Circuit 2	3
35	Comfort Alert Code 5 for Compressor Circuit 2	3
36	Comfort Alert Code 6 for Compressor Circuit 2	3
37	Comfort Alert Code 7 for Compressor Circuit 2	3
38	Comfort Alert Code 8 for Compressor Circuit 2	3
39	Comfort Alert Code 9 for Compressor Circuit 2	3
42	Invalid Thermostat Selection	1
44	1st Stage COMBUSTION PRESS SWITCH CLOSED	2
46	1st Stage COMBUSTION PRESS SWITCH OPEN	2
49	FREEZE SWITCH OPEN – CIRCUIT 1	2
50	FREEZE SWITCH OPEN -CIRCUIT 2	2
55	2nd Stage COMBUSTION PRESS SWITCH CLOSED	2
57	2nd Stage COMBUSTION PRESS SWITCH OPEN	2,3
59	Condensate Drain Plugged	3
61	Blower Fault – NO RUN	3
83	Condenser Coil Temp Sensor Fail-OCT	2
84	Outdoor Air Temperature Sensor Fail-OAT	2
88	Emergency Stop Fault	3
93	CONTROL Fault	3
97	Smoke Detection	3

*Fault levels:0 = none, 1=warning, 2= problem, 3=shutdown

WIRING INFORMATION

LINE VOLTAGE
- FACTORY STANDARD
- FACTORY OPTION
- FIELD INSTALLED

LOW VOLTAGE
- FACTORY STANDARD
- FACTORY OPTION
- FIELD INSTALLED

REPLACEMENT WIRE
-MUST BE THE SAME SIZE AND TYPE OF INSULATION AS ORIGINAL (105°C MIN.)

WARNING
-CABINET MUST BE PERMANENTLY GROUNDED AND CONFORM TO I.E.C., N.E.C., C.E.C., NATIONAL WIRING REGULATIONS, AND LOCAL CODES A S APPLICABLE.

NOTES

1. CONNECTORS SUITABLE FOR USE WITH COPPER CONDUCTORS ONLY.
2. CONNECT FIELD WIRING IN GROUNDED RAIN TIGHT CONDUIT TO FUSED DISCONNECT.
3. CONNECT FIELD WIRE TO COMPRESSOR CONTACTOR (CC1).
4. REMOVE J3 AT (CC1) TO INSTALL LOW AMBIENT ACCESSORY.
5. IF REQUIRED, ATTACH CRANKCASE HEATER ACCESSORY TO CC1 (L1) AND CC1 (L2).
6. COMPRESSOR MOTOR THERMALLY PROTECTED. ALL 3 PHASE MODELS ARE PROTECTED UNDER PRIMARY SINGLE PHASE CONDITIONS.
7. TRANSFORMER FACTORY WIRED AS SHOWN BELOW. CHANGE PRIMARY VOLTAGE CONNECTIONS FOR ALTERNATE VOLTAGES, IF REQUIRED.

UNIT VOLTAGES - HZ	TRANSFORMER TERM.
200-220 - 50HZ	200
208 - 60HZ	230
230 - 60HZ	230
380 - 60HZ	400
380-415 - 50HZ	400
460 - 60HZ	460
575 - 60HZ	230

8. LOW VOLTAGE CIRCUIT IS N.E.C. CLASS 2 WITH A CLASS 2 TRANSFORMER, 24VAC 50/60 HZ SUPPLIED.
9. MOTOR FACTORY WIRED FOR CORRECT VOLTAGE.
10. REMOVE PL36 FOR ECOMOMIZER ACCESSORY. PL34 AND PL36 LOCATED IN RETURN AIR SECTION.
11. CONNECT TO ECONOMIZER LOGIC MODULE.

COMPONENT CODES

BC	BLOWER CONTACTOR
CA	COMFORT ALERT MODULE
CC	COMPRESSOR CONTACTOR
CCH	CRANKCASE HEATER
CDS	CLOG DRAIN SENSOR
CFS	CLOGGED FILTER SWITCH
COMP	COMPRESSOR
CT	CONTROL TRANSFORMER
DAT	DISCHARGE AIR ESENSOR
DISC	DISCONNECT SWITCH
ELM	ECONOMIZER LOGIC MODULE
FLMS	FLAME SENSOR
FP	FAN PROVING
FS	FREEZE SENSOR
FT	FREEZE STAT
GFCO	GROUND FAULT CONVENIENCE OUTLET
GL	GROUND LUG
GND	GROUND
HPC	HIGH PRESSURE CONTROL
IBM	INDOOR BLOWER MOTOR
IDM	INDUCED DRAFT MOTOR
IFC	INTEGRATED FURNACE CONTROL
LAC	LOW AMBIENT CONTROL
LPC	LOW PRESSURE CONTROL
MRLC	MANUAL RESET LIMIT CONTROL
NPC	NEGATIVE PRESSURE SWITCH
OAT	OUTSIDE AIR SENSOR
OFM	OUTDOOR FAN MOTOR
PL	PLUG
PT	POWER TRANSFORMER
RAT	RETURN AIR SENSOR
RC	RUN CAPACITOR
RTU-C	ROOFTOP UNIT CONTROL
SE	SPARK ELECTRODE
TB	TERMINAL BLOCK
US	UNLOADER SOLENOID

WIRE COLOR CODE

BK.....BLACK	G.....GREEN	PR.....PURPLE
BR.....BROWN	GY.....GRAY	R.....RED
BL.....BLUE	O.....ORANGE	W .....WHITE
		Y .....YELLOW

ELECTRICAL WIRING SCHEMATIC

GE NON DDC 2-STG 090/102/120
575V 3PH 60Hz

APPROVED:	CHECKED:	ORIGINAL RELEASE NO.:
MODELED BY: TCJW	DATE: 10-30-17	R-1071S108
PART NO.: 90-106178-06		REV: 02

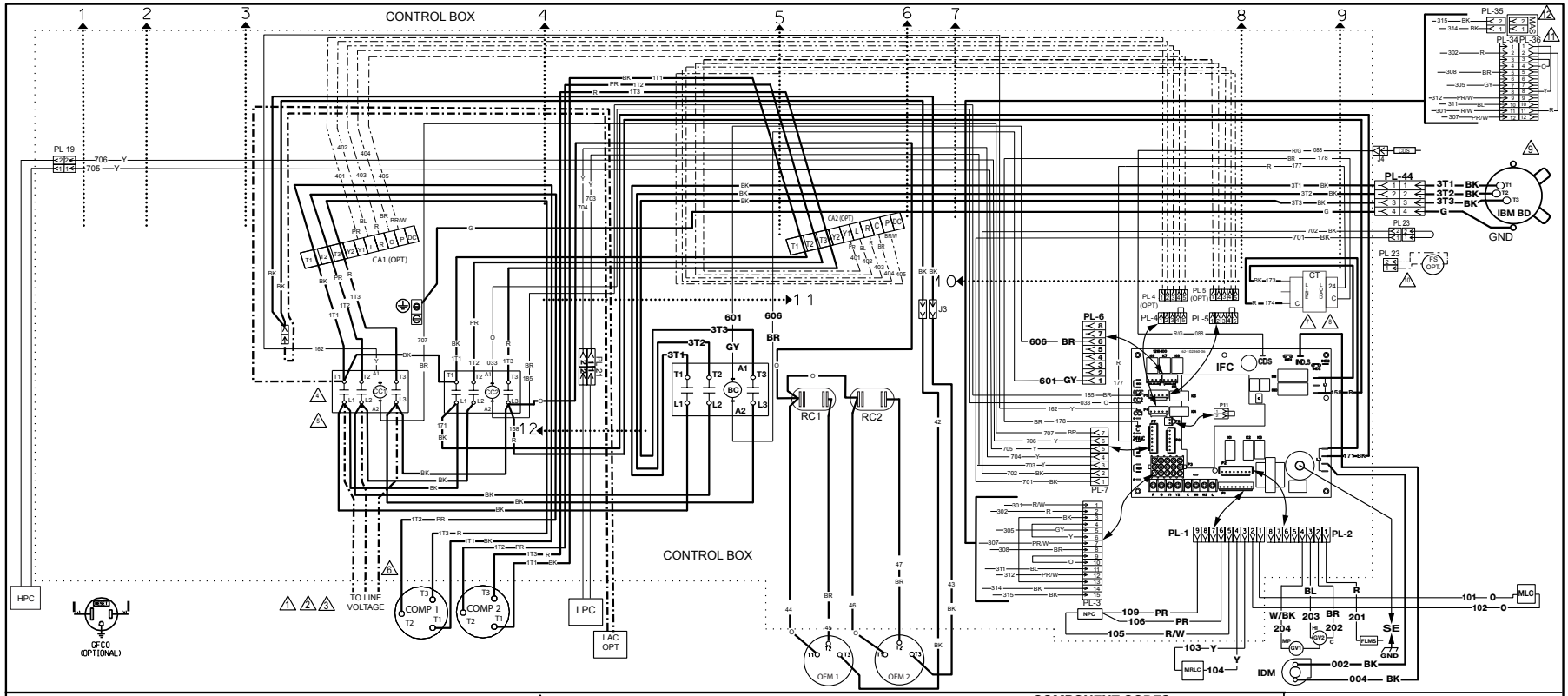

WIRING INFORMATION

LINE VOLTAGE
- -FACTORY STANDARD
- -FACTORY OPTION
- -FIELD INSTALLED

LOW VOLTAGE
- -FACTORY STANDARD
- -FACTORY OPTION
- -FIELD INSTALLED

REPLACEMENT WIRE
-MUST BE THE SAME SIZE AND TYPE OF INSULATION AS ORIGINAL (105C. MIN.)

WARNING
-CABINET MUST BE PER MANENTLY GROUNDED AND CONFORM TO I.E.C., N.E.C., C.E.C., NATIONAL WIRING REGULATIONS, AND LOCAL CODES A'S APPLICABLE

NOTES

1. CONNECTORS SUITABLE FOR USE WITH COPPER CONDUCTORS ONLY.
2. CONNECT FIELD WIRING IN GROUNDED RAIN TIGHT CONDUIT TO FUSED DISCONNECT.
3. CONNECT FIELD WIRE TO COMPRESSOR CONTACTOR (CC1).
4. REMOVE J3 AT (CC1) TO INSTALL LOW AMBIENT ACCESSORY.
5. IF REQUIRED, ATTACH CRANKCASE HEATER ACCESSORY TO CC1 (L1) AND CC1 (L2).
6. COMPRESSOR MOTOR THERMALLY PROTECTED. ALL 3 PHASE MODELS ARE PROTECTED UNDER PRIMARY SINGLE PHASE CONDITIONS.
7. TRANSFORMER FACTORY WIRED AS SHOWN BELOW. CHANGE PRIMARY VOLTAGE CONNECTIONFOR ALTERNATE VOLTAGES, IF REQUIRED.

UNIT VOLTAGES –HZ	TRANSFORMER TERM.
200-220 –50 HZ	200
208 –60 HZ	230
230 –60 HZ	230
380 –60 HZ	400
380-415 -50 HZ	400
460 –60 HZ	460
575 –60 HZ	575

8. LOW VOLTAGE CIRCUIT IS N.E.C. CLASS 2 WITH A CLASS 2 TRANSFORMER, 24VAC 50/60 HZ SUPPLIED.
9. MOTOR FACTORY WIRED FOR CORRECT VOLTAGE.
10. REMOVE PL23 JUMPER FOR OPTIONAL FT LOCATED IN BLOWER COMPARTMENT.
11. REMOVE PL36 FOR ECONOMIZER ACCESSORY. PL34 AND PL36 LOCATED IN RETURN AIR SECTION.
12. MAS ACCESSORY PROVIDED WITH ECONOMIZER. PL35 LOCATED IN BLOWER COMPARTMENT.

COMPONENT CODES

BC	BLOWER CONTACTOR
CA	COMFORT ALERT MODULE
CC	COMPRESSOR CONTACTOR
CCH	CRANKCASE HEATER
CDS	CLOGGED DRAIN SENSOR
CFS	CLOGGED FILTER SWITCH
COMP	COMPRESSOR
CT	CONTROL TRANSFORMER
DAT	DISCHARGE AIR SENSOR
DISC	DISCONNECT SWITCH
FLMS	FLAME SENSOR
FP	FAN PROVING
FS	FREEZE SENSOR
GFCO	GROUND FAULT CONVENIENCE OUTLET
GL	GROUND LUG
GND	GROUND
HPC	HIGH PRESSURE CONTROL
IBM BD	INDOOR BLOWER MOTOR BELT DRIVE
IDM	INDUCED DRAFT MOTOR
IFC	INTEGRATED FURNACE CONTROL
J	JUMPER
LAC	LOW AMBIENT CONTROL
LPC	LOW PRESSURE CONTROL
MRLC	MANUAL RESET LIMIT CONTROL
NPC	NEGATIVE PRESSURE SWITCH
OAT	OUTSIDE AIR SENSOR
OFM	OUTDOOR FAN MOTOR
PL	PLUG
PT	POWER TRANSFORMER
RAT	RETURN AIR SENSOR
RC	RUN CAPACITOR
RTU-C	RDOTOP UNIT CONTROL
SE	SPARK ELECTRODE

WIRE NUT

WIRE TIES

WIRE COLOR CODE

BK.....BLACK	G.....GREEN	PR.....PURPLE
BR.....BROWN	GY.....GRAY	R.....RED
BL.....BLUE	O.....ORANGE	W.....WHITE
		Y.....YELLOW

ELECTRICAL WIRING DIAGRAM

GE NON DDC 2-STG 150
208/230/380/460V 3 PH 60 Hz

GE NON DDC 2-STG 120
380-415V 3PH 50 Hz

APPROVED:	CHECKED:	ORIGINAL RELEASE NO.:
MODELED BY: TCJW	DATE: 03-01-18	R-1071S208
PART NO.: 90-106177-07		REV: 00

FIGURE 34

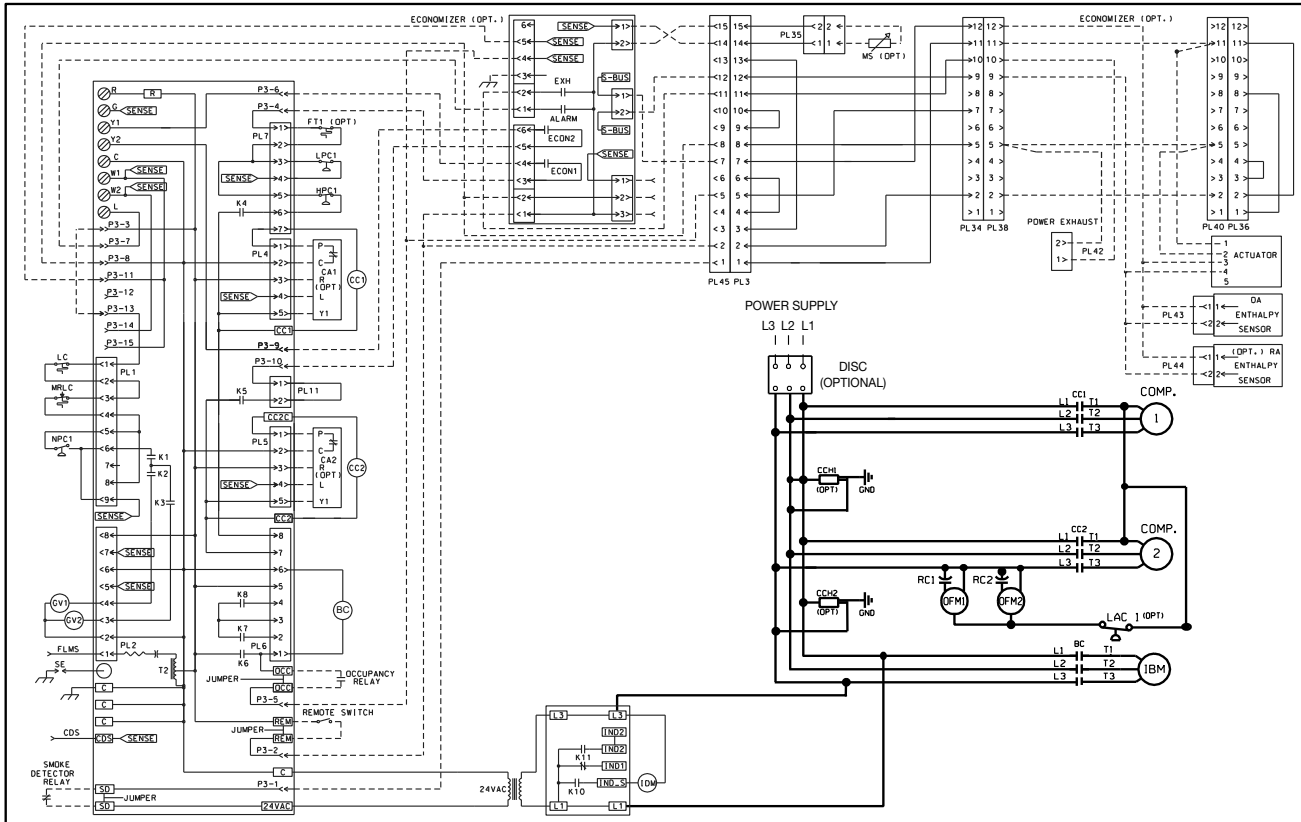

ALARM CODES

CODE	Description	FAULT LEVEL –0,1,2,3*
0	STANDBY	0
c	COMPRESSOR ON – Low (Flashing if in time delay)	0
C	COMPRESSOR ON – High (Flashing if in time delay)	0
E	Economizer Cooling – No Compressor	0
F	CONTINUOUS FAN	0
h	HEAT ON – Low Stage	0
H	GAS HEAT ON – High Stage	0
4	Comfort Alert Code 4 for Compressor Circuit 1	3
5	Comfort Alert Code 5 for Compressor Circuit 1	3
6	Comfort Alert Code 6 for Compressor Circuit 1	3
7	Comfort Alert Code 7 for Compressor Circuit 1	3
8	Comfort Alert Code 8 for Compressor Circuit 1	3
9	Comfort Alert Code 9 for Compressor Circuit 1	3
11	FAILED IGNITION	2
12	LO FLAME SENSE	1
13	FLAME LOST	2
14	UNEXPECTED FLAME	3
15	2nd Stage Gas valve improper voltage	2
20	REFRIGERANT LOW PRESSURE SWITCH OPEN – CIRCUIT 1	2
21	REFRIGERANT LOW PRESSURE SWITCH OPEN – CIRCUIT 2	2
22	MAIN LIMIT OPEN	2
29	REFRIGERANT HIGH PRESSURE SWITCH OPEN – CIRCUIT 1	2
30	REFRIGERANT HIGH PRESSURE SWITCH OPEN – CIRCUIT 2	2
33	MRLC (Rollout Limit) OPEN	2
34	Comfort Alert Code 4 for Compressor Circuit 2	3
35	Comfort Alert Code 5 for Compressor Circuit 2	3
36	Comfort Alert Code 6 for Compressor Circuit 2	3
37	Comfort Alert Code 7 for Compressor Circuit 2	3
38	Comfort Alert Code 8 for Compressor Circuit 2	3
39	Comfort Alert Code 9 for Compressor Circuit 2	3
42	Invalid Thermostat Selection	1
44	1st Stage COMBUSTION PRESS SWITCH CLOSED	2
46	1st Stage COMBUSTION PRESS SWITCH OPEN	2
49	FREEZE SWITCH OPEN – CIRCUIT 1	2
50	FREEZE SWITCH OPEN -CIRCUIT 2	2
55	2nd Stage COMBUSTION PRESS SWITCH CLOSED	2
57	2nd Stage COMBUSTION PRESS SWITCH OPEN	2,3
59	Condensate Drain Plugged	3
61	Blower Fault – NO RUN	3
83	Condenser Coil Temp Sensor Fail-OCT	2
84	Outdoor Air Temperature Sensor Fail-OAT	2
88	Emergency Stop Fault	3
93	CONTROL Fault	3
97	Smoke Detection	3

*Fault levels:0 = none, 1=warning, 2= problem, 3=shutdown

WIRING INFORMATION

LINE VOLTAGE
-FACTORY STANDARD
-FACTORY OPTION
-FIELD INSTALLED

LOW VOLTAGE
-FACTORY STANDARD
-FACTORY OPTION
-FIELD INSTALLED

REPLACEMENT WIRE
-MUST BE THE SAME SIZE AND TYPE OF INSULATION AS ORIGINAL (105ºC MIN.)

WARNING
-CABINET MUST BE PERMANENTLY GROUNDED AND CONFORM TO I.E.C., N.E.C., C.E.C., NATIONAL WIRING REGULATIONS, AND LOCAL CODES AS APPLICABLE.

NOTES

1. CONNECTORS SUITABLE FOR USE WITH COPPER CONDUCTORS ONLY.
2. CONNECT FIELD WIRING IN GROUNDED RAIN TIGHT CONDUIT TO FUSED DISCONNECT.
3. CONNECT FIELD WIRE TO COMPRESSOR CONTACTOR (CC1).
4. REMOVE J3 AT (CC1) TO INSTALL LOW AMBIENT ACCESSORY.
5. IF REQUIRED, ATTACH CRANKCASE HEATER ACCESSORY TO CC1 (L1) AND CC1 (L2).
6. COMPRESSOR MOTOR THERMALLY PROTECTED. ALL 3 PHASE MODELS ARE PROTECTED UNDER PRIMARY SINGLE PHASE CONDITIONS.
7. TRANSFORMER FACTORY WIRED AS SHOWN BELOW. CHANGE PRIMARY VOLTAGE CONNECTIONS FOR ALTERNATE VOLTAGES, IF REQUIRED.

UNIT VOLTAGES - HZ	TRANSFORMER TERM.
200-220 - 50HZ	200
208 - 60HZ	230
230 - 60HZ	230
380 - 60HZ	400
380-415 - 50HZ	400
460 - 60HZ	460
575 - 60HZ	230

8. LOW VOLTAGE CIRCUIT IS N.E.C. CLASS 2 WITH A CLASS 2 TRANSFORMER, 24VAC, 50/60 HZ SUPPLIED.
9. MOTOR FACTORY WIRED FOR CORRECT VOLTAGE.
10. REMOVE PL36 FOR ECONOMIZER ACCESSORY. PL34 AND PL36 LOCATED IN RETURN AIR SECTION.

COMPONENT CODES

BC	BLOWER CONTACTOR
CA	COMFORT ALERT MODULE
CC	COMPRESSOR CONTACTOR
CCH	CRANKCASE HEATER
CDS	CLOGGED DRAIN SENSOR
CFS	CLOGGED FILTER SWITCH
COMP	COMPRESSOR
CT	CONTROL TRANSFORMER
DAT	DISCHARGE AIR SENSOR
DISC	DISCONNECT SWITCH
FLMS	FLAME SENSOR
FP	FAN PROVING
FS	FREEZE SENSOR
GFCO	GROUND FAULT CONVENIENCE OUTLET
GL	GROUND LUG
GND	GROUND
HPC	HIGH PRESSURE CONTROL
IBM	INDOOR BLOWER MOTOR
IDM	INDUCED DRAFT MOTOR
IFC	INTEGRATED FURNACE CONTROL
LAC	LOW AMBIENT CONTROL
LPC	LOW PRESSURE CONTROL
MAS	MIXED AIR SENSOR
MLC	MAIN LIMIT CONTROL
MRLC	MANUAL RESET LIMIT CONTROL
NPC	NEGATIVE PRESSURE SWITCH
OAT	OUTSIDE AIR SENSOR
OFM	OUTDOOR FAN MOTOR
PL	PLUG
PT	POWER TRANSFORMER
RAT	RETURN AIR SENSOR
RC	RUN CAPACITOR
RTU-C	ROOFTOP UNIT CONTROL
SE	SPARK ELECTRODE
US	UNLOADER SOLENOID

WIRE COLOR CODE

BK.....BLACK	G.....GREEN	PR.....PURPLE
BR.....BROWN	GY.....GRAY	R.....RED
BL.....BLUE	O.....ORANGE	W .....WHITE
		Y.....YELLOW

ELECTRICAL WIRING SCHEMATIC

GE NON DDC 2-STG 150
208/230/380/460V 3PH 60 Hz.
GE NON DDC 2-STG 120
380-415V 3PH 50 Hz

APPROVED:	CHECKED:	ORIGINAL RELEASE NO.:
MODELED BY: JHB	DATE: 3-19-2018	R-1071S208
PART NO.: 90-106178-07		REV: 00

FIGURE 35

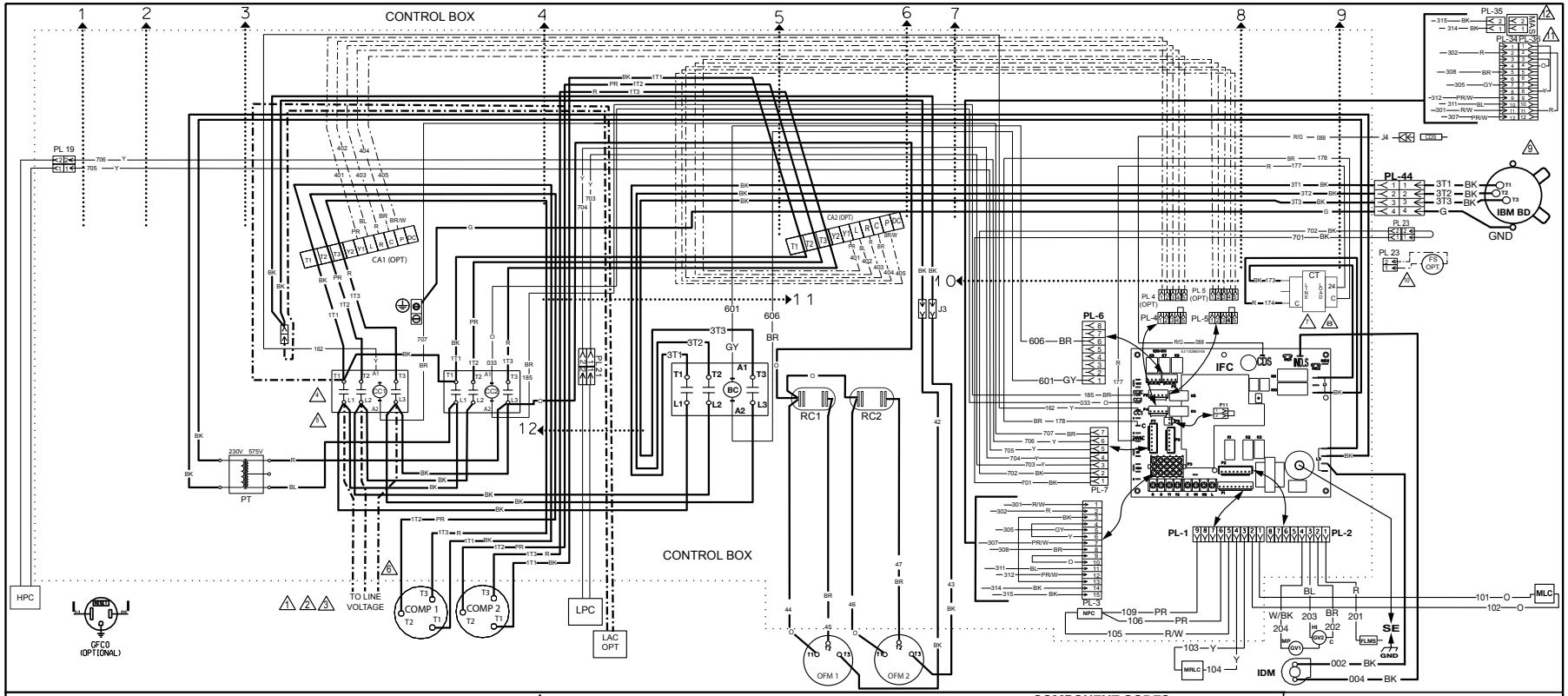

WIRING INFORMATION

LINE VOLTAGE
- -FACTORY STANDARD
- -FACTORY OPTION
- -FIELD INSTALLED

LOW VOLTAGE
- -FACTORY STANDARD
- -FACTORY OPTION
- -FIELD INSTALLED

REPLACEMENT WIRE
-MUST BE THE SAME SIZE AND TYPE OF INSULATION AS ORIGINAL (105C. MIN.)

WARNING
-CABINET MUST BE PER MANENTLY GROUNDED AND CONFORM TO I.E.C., N.E.C., C.E.C., NATIONAL WIRING REGULATIONS,AND LOCAL CODES A'S APPLICABLE

NOTES

1. CONNECTORS SUITABLE FOR USE WITH COPPER CONDUCTORS ONLY.
2. CONNECT FIELD WIRING IN GROUNDED RAIN TIGHT CONDUIT TO FUSED DISCONNECT.
3. CONNECT FIELD WIRE TO COMPRESSOR CONTACTOR (CC1).
4. REMOVE J3 AT (CC1) TO INSTALL LOW AMBIENT ACCESSORY.
5. IF REQUIRED, ATTACH CRANKCASE HEATER ACCESSORY TO CC1 (L1) AND CC1 (L2).
6. COMPRESSOR MOTOR THERMALLY PROTECTED. ALL 3 PHASE MODELS ARE PROTECTED UNDER PRIMARY SINGLE PHASE CONDITIONS.
7. TRANSFORMER FACTORY WIRED AS SHOWN BELOW. CHANGE PRIMARY VOLTAGE CONNECTIONFOR ALTERNATE VOLTAGES, IF REQUIRED.

UNIT VOLTAGES –HZ	TRANSFORMER TERM.
200-220 –50 HZ	200
208 –60 HZ	230
230 –60 HZ	230
380 –60 HZ	400
380-415 -50 HZ	400
460 –60 HZ	460
575 –60 HZ	575

8. LOW VOLTAGE CIRCUIT IS N.E.C. CLASS 2 WITH A CLASS 2 TRANSFORMER, 24VAC 50/60 HZ SUPPLIED.
9. MOTOR FACTORY WIRED FOR CORRECT VOLTAGE.
10. REMOVE PL23 JUMPER FOR OPTIONAL FT LOCATED IN BLOWER COMPARTMENT.
11. REMOVE PL36 FOR ECONOMIZER ACCESSORY. PL34 AND PL36 LOCATED IN RETURN AIR SECTION.
12. MAS ACCESSORY PROVIDED WITH ECONOMIZER. PL35 LOCATED IN BLOWER COMPARTMENT.

COMPONENT CODES

BC	BLOWER CONTACTOR
CA	COMFORT ALERT MODULE
CC	COMPRESSOR CONTACTOR
CCH	CRANKCASE HEATER
CDS	CLOGGED DRAIN SENSOR
CFS	CLOGGED FILTER SWITCH
COMP	COMPRESSOR
CT	CONTROL TRANSFORMER
DAT	DISCHARGE AIR SENSOR
DISC	DISCONNECT SWITCH
FLMS	FLAME SENSOR
FP	FAN PROVING
FS	FREEZE SENSOR
GFCO	GROUND FAULT CONVENIENCE OUTLET
GL	GROUND LUG
GND	GROUND
HPC	HIGH PRESSURE CONTROL
IBM BD	INDOOR BLOWER MOTOR BELT DRIVE
IDM	INDUCED DRAFT MOTOR
IFC	INTEGRATED FURNACE CONTROL
J	JUMPER
LAC	LOW AMBIENT CONTROL
LPC	LOW PRESSURE CONTROL
MRLC	MANUAL RESET LIMIT CONTROL
NPC	NEGATIVE PRESSURE SWITCH
OAT	OUTSIDE AIR SENSOR
OFM	OUTDOOR FAN MOTOR
PL	PLUG
PT	POWER TRANSFORMER
RAT	RETURN AIR SENSOR
RC	RUN CAPACITIOR
RTU-C	ROOTOP UNIT CONTROL
SE	SPARK ELECTRODE

WIRE NUT

WIRE TIES

WIRE COLOR CODE

BK.....BLACK	G.....GREEN	PR.....PURPLE
BR.....BROWN	GY.....GRAY	R.....RED
BL.....BLUE	O.....ORANGE	W.....WHITE
		Y.....YELLOW

ELECTRICAL WIRING DIAGRAM

GE NON DDC 2-STG 150
575V 3 PH 60 Hz

APPROVED:	CHECKED:	ORIGINAL RELEASE NO.:
MODELED BY: TCJW	DATE: 03-01-18	R-1071S208
PART NO.: 90-106177-08		REV: 00

FIGURE 36

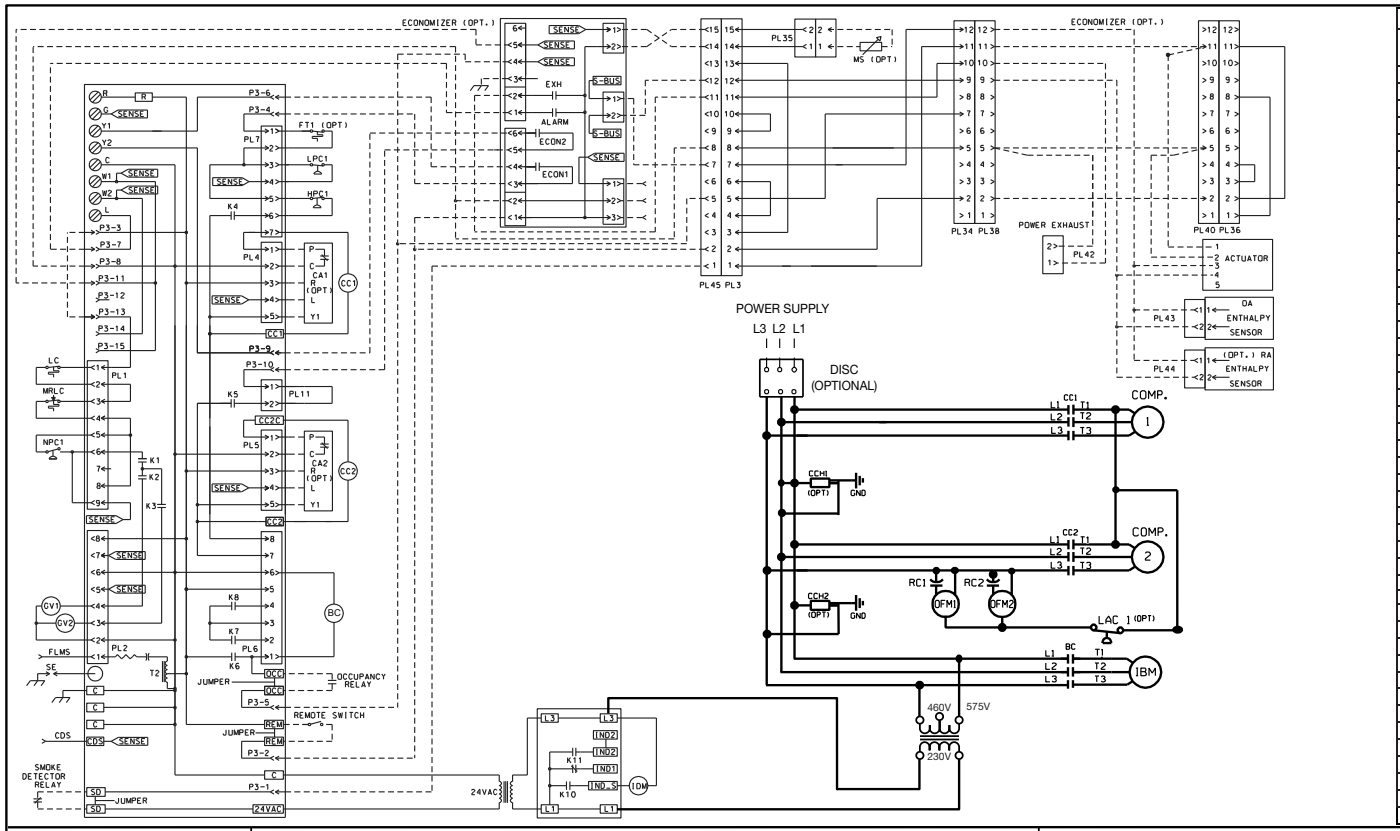

ALARM CODES

CODE	Description	FAULT LEVEL –0,1,2,3*
0	STANDBY	0
c	COMPRESSOR ON – Low (Flashing if in time delay)	0
C	COMPRESSOR ON – High (Flashing if in time delay)	0
E	Economizer Cooling – No Compressor	0
F	CONTINUOUS FAN	0
h	HEAT ON – Low Stage	0
H	GAS HEAT ON – High Stage	0
4	Comfort Alert Code 4 for Compressor Circuit 1	3
5	Comfort Alert Code 5 for Compressor Circuit 1	3
6	Comfort Alert Code 6 for Compressor Circuit 1	3
7	Comfort Alert Code 7 for Compressor Circuit 1	3
8	Comfort Alert Code 8 for Compressor Circuit 1	3
9	Comfort Alert Code 9 for Compressor Circuit 1	3
11	FAILED IGNITION	2
12	LO FLAME SENSE	1
13	FLAME LOST	2
14	UNEXPECTED FLAME	3
15	2nd Stage Gas valve improper voltage	2
20	REFRIGERANT LOW PRESSURE SWITCH OPEN – CIRCUIT 1	2
21	REFRIGERANT LOW PRESSURE SWITCH OPEN – CIRCUIT 2	2
22	MAIN LIMIT OPEN	2
29	REFRIGERANT HIGH PRESSURE SWITCH OPEN – CIRCUIT 1	2
30	REFRIGERANT HIGH PRESSURE SWITCH OPEN – CIRCUIT 2	2
33	MRLC (Rollout Limit) OPEN	2
34	Comfort Alert Code 4 for Compressor Circuit 2	3
35	Comfort Alert Code 5 for Compressor Circuit 2	3
36	Comfort Alert Code 6 for Compressor Circuit 2	3
37	Comfort Alert Code 7 for Compressor Circuit 2	3
38	Comfort Alert Code 8 for Compressor Circuit 2	3
39	Comfort Alert Code 9 for Compressor Circuit 2	3
42	Invalid Thermostat Selection	1
44	1st Stage COMBUSTION PRESS SWITCH CLOSED	2
46	1st Stage COMBUSTION PRESS SWITCH OPEN	2
49	FREEZE SWITCH OPEN – CIRCUIT 1	2
50	FREEZE SWITCH OPEN -CIRCUIT 2	2
55	2nd Stage COMBUSTION PRESS SWITCH CLOSED	2
57	2nd Stage COMBUSTION PRESS SWITCH OPEN	2,3
59	Condensate Drain Plugged	3
61	Blower Fault – NO RUN	3
83	Condenser Coil Temp Sensor Fail-OCT	2
84	Outdoor Air Temperature Sensor Fail-OAT	2
88	Emergency Stop Fault	3
93	CONTROL Fault	3
97	Smoke Detection	3

*Fault levels:0 = none, 1=warning, 2= problem, 3=shutdown

WIRING INFORMATION

LINE VOLTAGE
- FACTORY STANDARD
- FACTORY OPTION
- FIELD INST ALLED

LOW VOLTAGE
- FACTORY STANDARD
- FACTORY OPTION
- FIELD INST ALLED

REPLACEMENT WIRE
-MUST BE THE SAME SIZE AND TYPE OF INSULATION AS ORIG INAL(105°C MIN.)

WARNING
-CABINET MUST BE PERMANENTLY GROUNDED AND CONFORM TO I.E.C., N.E.C., C.E.C., NATIONAL WIRING REGULATIONS, AND LOCAL CODES AS APPLICABLE.

NOTES

1. CONNECTORS SUITABLE FOR USE WITH COPPER CONDUCTORS ONLY.
2. CONNECT FIELD WIRING IN GROUNDED RAIN TIGHT CONDUIT TO FUSED DISCONNECT.
3. CONNECT FIELD WIRE TO COMPRESSOR CONTACTOR (CC1).
4. REMOVE J3 AT (CC1) TO INSTALL LOW AMBIENT ACCESSORY.
5. IF REQUIRED, ATTACH CRANKCASE HEATER ACCESSORY TO CC1 (L1) AND CC1 (L2).
6. COMPRESSOR MOTOR THERMALLY PROTECTED. ALL 3 PHASE MODELS ARE PROTECTED UNDER PRIMARY SINGLE PHASE CONDITIONS.
7. TRANSFORMER FACTORY WIRED AS SHOWN BELOW. CHANGE PRIMARY VOLTAGE CONNECTIONS FOR ALTERNATE VOLTAGES, IF REQUIRED.

UNIT VOLTAGES - HZ	TRANSFORMER TERM.
200-220 - 50HZ	200
208 - 60HZ	230
230 - 60HZ	230
380 - 60HZ	400
380-415 - 50HZ	400
460 - 60HZ	460
575 - 60HZ	230

8. LOW VOLTAGE CIRCUIT IS N.E.C. CLASS 2 WITH A CLASS 2 TRANSFORMER, 24VAC 50/60 HZ SUPPLIED.
9. MOTOR FACTORY WIRED FOR CORRECT VOLTAGE.
10. REMOVE PL36 FOR ECOMOMIZER ACCESSORY. PL34 AND PL36 LOCATED IN RETURN AIR SECTION.
11. CONNECT TO ECONOMIZER LOGIC MODULE.

COMPONENT CODES

BC	BLOWER CONTACTOR
CA	COMFORT ALERT MODULE
CC	COMPRESSOR CONTACTOR
CCH	CRANKCASE HEATER
CDS	CLOG DRAIN SENSOR
CFS	CLOGGED FILTER SWITCH
COMP	COMPRESSOR
CT	CONTROL TRANSFORMER
DAT	DISCHARGE AIR ESENSOR
DISC	DISCONNECT SWITCH
ELM	ECONOMIZER LOGIC MODULE
FLMS	FLAME SENSOR
FP	FAN PROVING
FS	FREEZE SENSOR
FT	FREEZE STAT
GFCO	GROUND FAULT CONVENIENCE OUTLET
GL	GROUND LUG
GND	GROUND
HPC	HIGH PRESSURE CONTROL
IBM	INDOOR BLOWER MOTOR
IDM	INDUCED DRAFT MOTOR
IFC	INTEGRATED FURNACE CONTROL
LAC	LOW AMBIENT CONTROL
LPC	LOW PRESSURE CONTROL
MRLC	MANUAL RESET LIMIT CONTROL
NPC	NEGATIVE PRESSURE SWITCH
OAT	OUTSIDE AIR SENSOR
OFM	OUTDOOR FAN MOTOR
PL	PLUG
PT	POWER TRANSFORMER
RAT	RETURN AIR SENSOR
RC	RUN CAPACITOR
RTU-C	ROOFTOP UNIT CONTROL
SE	SPARK ELECTRODE
TB	TERMINAL BLOCK
US	UNLOADER SOLENOID

WIRE COLOR CODE

BK.....BLACK	G.....GREEN	PR.....PURPLE
BR.....BROWN	GY.....GRAY	R.....RED
BL.....BLUE	O.....ORANGE	W .....WHITE
		Y.....YELLOW

ELECTRICAL WIRING SCHEMATIC

GE NON DDC 2-STG 150
575V 3PH 60Hz

APPROVED:	CHECKED:	ORIGINAL RELEASE NO.: R-1071S208
MODELED BY: JHB	DATE: 3/19/2018	
PART NO.: 90-106178-08		REV: 00

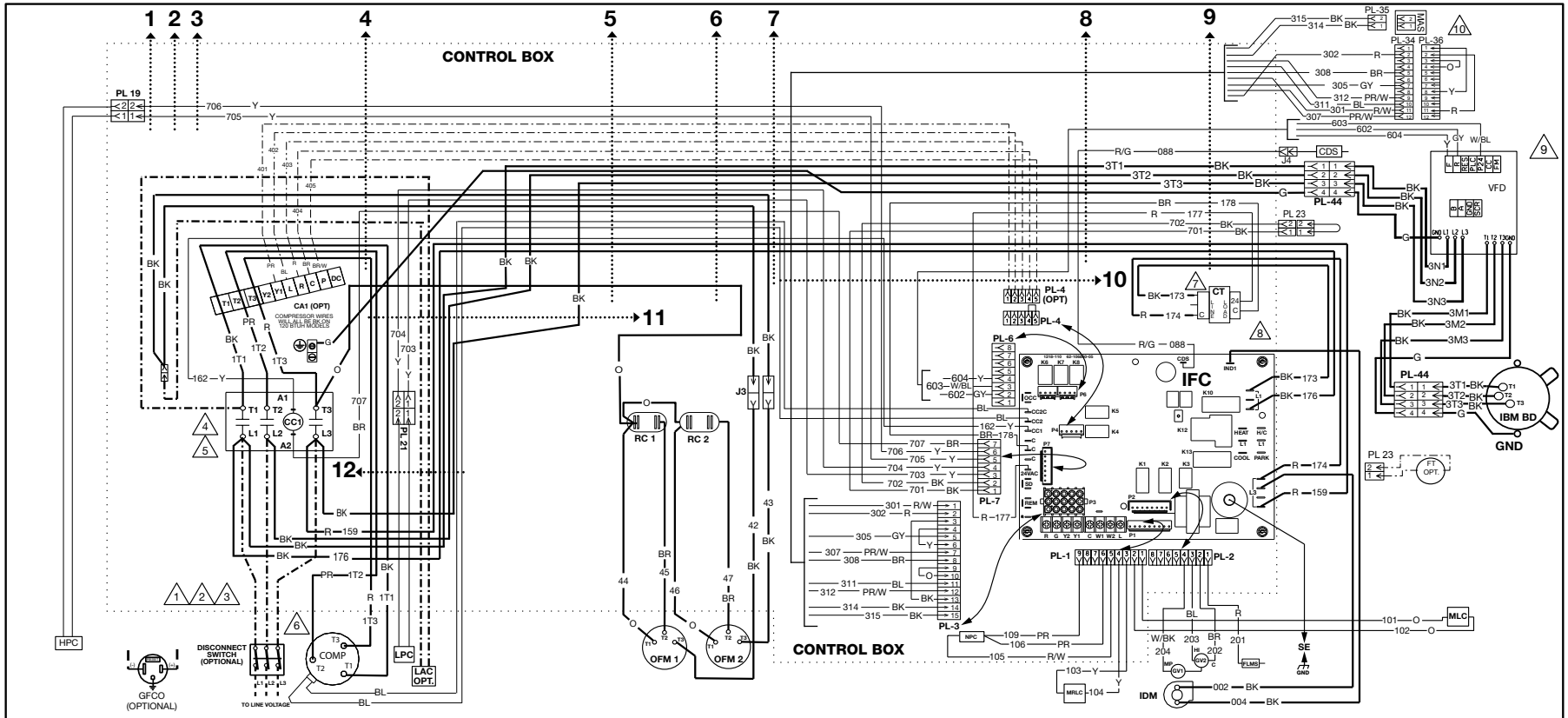

WIRING INFORMATION

LINE VOLTAGE
- -FACTORY STANDARD
- -FACTORY OPTION
- -FIELD INSTALLED

LOW VOLTAGE
- -FACTORY STANDARD
- -FACTORY OPTION
- -FIELD INSTALLED

REPLACEMENT WIRE
-MUST BE THE SAME SIZE AND TYPE OF I NSULATION AS ORIGINAL (105ºC MIN.)

WARNING
-CABINET MUST BE PERMANE NTLY GROUNDED AND CONFORM TO I.E.C., N.E.C., C.E.C., NATIONAL WIRING REGULATIONS, AND LOCAL CODES A S APPLICABLE.

NOTES

1. CONNECTORS SUITABLE FOR USE WITH COPPER CONDUCTORS ONLY.
2. CONNECT FIELD WIRING IN GROUNDED RAIN TIGHT CONDUIT TO FUSED DISCONNECT.
3. CONNECT FIELD WIRE TO COMPRESSOR CONTACTOR (CC1).
4. REMOVE J3 AT (CC1) TO INSTALL LOW AMBIENT ACCESSORY.
5. IF REQUIRED, ATTACH CRANKCASE HEATER ACCESSORY TO CC1 (L1) AND CC1 (L2).
6. COMPRESSOR MOTOR THERMALLY PROTECTED. ALL 3 PHASE MODELS ARE PROTECTED UNDER PRIMARY SINGLE PHASE CONDITIONS.
7. TRANSFORMER FACTORY WIRED AS SHOWN BELOW. CHANGE PRIMARY VOLTAGE CONNECTIONS FOR ALTERNATE VOLTAGES, IF REQUIRED.

UNIT VOLTAGES - HZ	TRANSFORMER TERM.
200-220 - 50-HZ	200
208 - 60-HZ	230
230 - 60-HZ	230
380 - 60-HZ	400
380-415 - 50-HZ	400
460 - 60-HZ	460
575 - 60-HZ	230

8. LOW VOLTAGE CIRCUIT IS N.E.C. CLASS 2 WITH A CLASS 2 TRANSFORMER, 24VAC, 50/60 HZ SUPPLIED.
9. MOTOR FACTORY WIRED FOR CORRECT VOLTAGE.
10. REMOVE PL36 FOR ECONOMIZER ACCESSORY. PL34 AND PL36 LOCATED IN RETURN AIR SECTION.

COMPONENT CODES

BC	BLOWER CONTACTOR
CA	COMFORT ALERT MODULE
CC	COMPRESSOR CONTACTOR
CCH	CRANKCASE HEATER
CDS	CLOGGED DRAIN SENSOR
CFS	CLOGGED FILTER SWITCH
COMP	COMPRESSOR
CT	CONTROL TRANSFORMER
DAT	DISCHARGE AIR SENSOR
DISC	DISCONNECT SWITCH
FLMS	FLAME SENSOR
FP	FAN PROVING
FS	FREEZE SENSOR
GFCO	GROUND FAULT CONVENIENCE OUTLET
GL	GROUND LUG
GND	GROUND
HPC	HIGH PRESSURE CONTROL
IBM	INDOOR BLOWER MOTOR
IDM	INDUCED DRAFT MOTOR
IFC	INTEGRATED FURNACE CONTROL
LAC	LOW AMBIENT CONTROL
LPC	LOW PRESSURE CONTROL
MAS	MIXED AIR SENSOR
MLC	MAIN LIMIT CONTROL
MRLC	MANUAL RESET LIMIT CONTROL
NPC	NEGATIVE PRESSURE SWITCH
OAT	OUTSIDE AIR SENSOR
OFM	OUTDOOR FAN MOTOR
PL	PLUG
PT	POWER TRANSFORMER
RAT	RETURN AIR SENSOR
RC	RUN CAPACITOR
RTU-C	ROOFTOP UNIT CONTROL
SE	SPARK ELECTRODE
VFD	VARIABLE FREQUENCY DRIVE
	WIRE NUT
##	WIRE TIE

WIRE COLOR CODE

BK.....BLACK	G.....GREEN	PR.....PURPLE
BR.....BROWN	GY .....GRAY	R.....RED
BL.....BLUE	O.....ORANGE	W .....WHITE
		Y.....YELLOW

ELECTRICAL WIRING DIAGRAM

GE NON DDC 2-STG VFD 090/102/120
208/230/460V 3 PH 60 Hz

APPROVED:	CHECKED:	ORIGINAL RELEASE NO.:
MODELED BY: TCJW	DATE: 12-05-17	R-1071S126
PART NO.: 90-106177-09		REV: 01

FIGURE 38

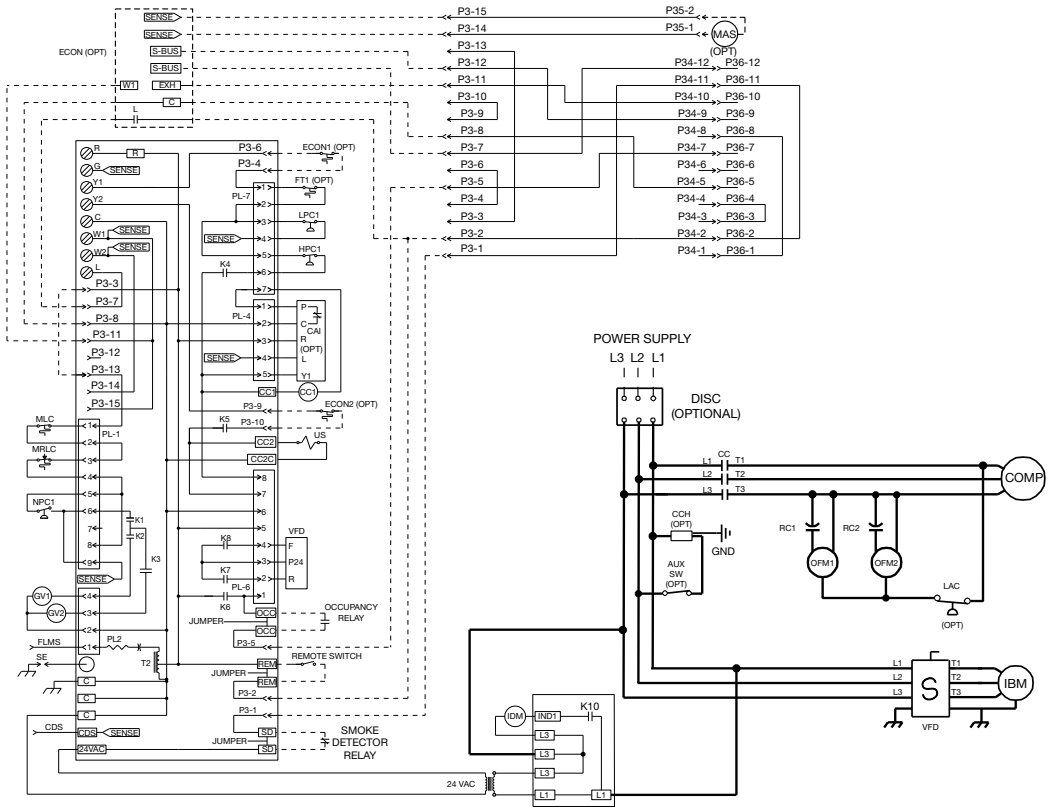

ALARM CODES

CODE	Description	FAULT LEVEL –0,1,2,3*
0	STANDBY	0
c	COMPRESSOR ON – Low (Flashing if in time delay)	0
C	COMPRESSOR ON – High (Flashing if in time delay)	0
E	Economizer Cooling – No Compressor	0
F	CONTINUOUS FAN	0
h	HEAT ON – Low Stage	0
H	GAS HEAT ON – High Stage	0
4	Comfort Alert Code 4 for Compressor Circuit 1	3
5	Comfort Alert Code 5 for Compressor Circuit 1	3
6	Comfort Alert Code 6 for Compressor Circuit 1	3
7	Comfort Alert Code 7 for Compressor Circuit 1	3
8	Comfort Alert Code 8 for Compressor Circuit 1	3
9	Comfort Alert Code 9 for Compressor Circuit 1	3
11	FAILED IGNITION	2
12	LO FLAME SENSE	1
13	FLAME LOST	2
14	UNEXPECTED FLAME	3
15	2nd Stage Gas valve improper voltage	2
20	REFRIGERANT LOW PRESSURE SWITCH OPEN – CIRCUIT 1	2
21	REFRIGERANT LOW PRESSURE SWITCH OPEN – CIRCUIT 2	2
22	MAIN LIMIT OPEN	2
29	REFRIGERANT HIGH PRESSURE SWITCH OPEN – CIRCUIT 1	2
30	REFRIGERANT HIGH PRESSURE SWITCH OPEN – CIRCUIT 2	2
33	MRLC (Rollout Limit) OPEN	2
34	Comfort Alert Code 4 for Compressor Circuit 2	3
35	Comfort Alert Code 5 for Compressor Circuit 2	3
36	Comfort Alert Code 6 for Compressor Circuit 2	3
37	Comfort Alert Code 7 for Compressor Circuit 2	3
38	Comfort Alert Code 8 for Compressor Circuit 2	3
39	Comfort Alert Code 9 for Compressor Circuit 2	3
42	Invalid Thermostat selection	1
44	1st Stage COMBUSTION PRESS SWITCH CLOSED	2
46	1st Stage COMBUSTION PRESS SWITCH OPEN	2
49	FREEZE SWITCH OPEN – CIRCUIT 1	2
50	FREEZE SWITCH OPEN -CIRCUIT 2	2
55	2nd Stage COMBUSTION PRESS SWITCH CLOSED	2
57	2nd Stage COMBUSTION PRESS SWITCH OPEN	2,3
59	Condensate Drain Plugged	3
61	Blower Fault – NO RUN	3
83	Condenser Coil Temp Sensor Fail-OCT	2
84	Outdoor Air Temperature Sensor Fail-OAT	2
88	Emergency Stop Fault	3
93	CONTROL Fault	3
97	Smoke Detection	3

*Fault levels:0 = none, 1=warning, 2= problem, 3=shutdown

WIRING INFORMATION

LINE VOLTAGE
-FACTORY STANDARD
-FACTORY OPTION
-FIELD INSTALLED

LOW VOLTAGE
-FACTORY STANDARD
-FACTORY OPTION
-FIELD INSTALLED

REPLACEMENT WIRE
-MUST BE THE SAME SIZE AND TYPE OF INSULATION AS ORIGINAL (105°C MIN.)

WARNING
-CABINET MUST BE PERMANENTLY GROUNDED AND CONFORM TO I.E.C., N.E.C., C.E.C., NATIONAL WIRING REGULATIONS, AND LOCAL CODES AS APPLICABLE.

NOTES

1. CONNECTORS SUITABLE FOR USE WITH COPPER CONDUCTORS ONLY.
2. CONNECT FIELD WIRING IN GROUNDED RAIN TIGHT CONDUIT TO FUSED DISCONNECT.
3. CONNECT FIELD WIRE TO COMPRESSOR CONTACTOR (CC1).
4. REMOVE J3 AT (CC1) TO INSTALL LOW AMBIENT ACCESSORY.
5. IF REQUIRED, ATTACH CRANKCASE HEATER ACCESSORY TO CC1 (L1) AND CC1 (L2).
6. COMPRESSOR MOTOR THERMALLY PROTECTED. ALL 3 PHASE MODELS ARE PROTECTED UNDER PRIMARY SINGLE PHASE CONDITIONS.
7. TRANSFORMER FACTORY WIRED AS SHOWN BELOW. CHANGE PRIMARY VOLTAGE CONNECTIONS FOR ALTERNATE VOLTAGES, IF REQUIRED.

UNIT VOLTAGES - HZ	TRANSFORMER TERM.
200-220 - 50HZ	200
208 - 60HZ	230
230 - 60HZ	230
380 - 60HZ	400
380-415 - 50HZ	400
460 - 60HZ	460
575 - 60HZ	230

8. LOW VOLTAGE CIRCUIT IS N.E.C. CLASS 2 WITH A CLASS 2 TRANSFORMER, 24VAC, 50/60 HZ SUPPLIED.
9. MOTOR FACTORY WIRED FOR CORRECT VOLTAGE.
10. REMOVE PL36 FOR ECONOMIZER ACCESSORY. PL34 AND PL36 LOCATED IN RETURN AIR SECTION.

COMPONENT CODES

CA	COMFORT ALERT MODULE	LPC	LOW PRESSURE CONTROL
CC	COMPRESSOR CONTACTOR	MAS	MIXED AIR SENSOR
CCH	CRANKCASE HEATER	MLC	MAIN LIMIT CONTROL
CDS	CLOGGED DRAIN SENSOR	MRLC	MANUAL RESET LIMIT CONTROL
CFS	CLOGGED FILTER SWITCH	NPC	NEGATIVE PRESSURE SWITCH
COMP	COMPRESSOR	OAT	OUTSIDE AIR SENSOR
CT	CONTROL TRANSFORMER	OFM	OUTDOOR FAN MOTOR
DAT	DISCHARGE AIR SENSOR	PL	PLUG
DISC	DISCONNECT SWITCH	PT	POWER TRANSFORMER
FLMS	FLAME SENSOR	RAT	RETURN AIR SENSOR
FP	FAN PROVING	RC	RUN CAPACITOR
FS	FREEZE SENSOR	RTU-C	ROOFTOP UNIT CONTROL
GFCO	GROUND FAULT CONVENIENCE OUTLET	SE	SPARK ELECTRODE
GL	GROUND LUG	US	UNLOADER SOLENOID
GND	GROUND	VFD	VARIABLE FREQUENCY DRIVE
HPC	HIGH PRESSURE CONTROL		
IBM	INDOOR BLOWER MOTOR		
IDM	INDUCED DRAFT MOTOR		
IFC	INTEGRATED FURNACE CONTROL		
LAC	LOW AMBIENT CONTROL		

WIRE COLOR CODE

BK.....BLACK	G.....GREEN	PR.....PURPLE
BR.....BROWN	GY.....GRAY	R.....RED
BL.....BLUE	O.....ORANGE	W .....WHITE
		Y.....YELLOW

ELECTRICAL WIRING SCHEMATIC

GE NON DDC 2-STG VFD 090/102/120
208/230/460V 3 PH 60 Hz

APPROVED:	CHECKED:	ORIGINAL RELEASE NO.:
MODELED BY: TEW	DATE: 12-06-17	R-1071S126
PART NO.: 90-106178-09		REV: 02

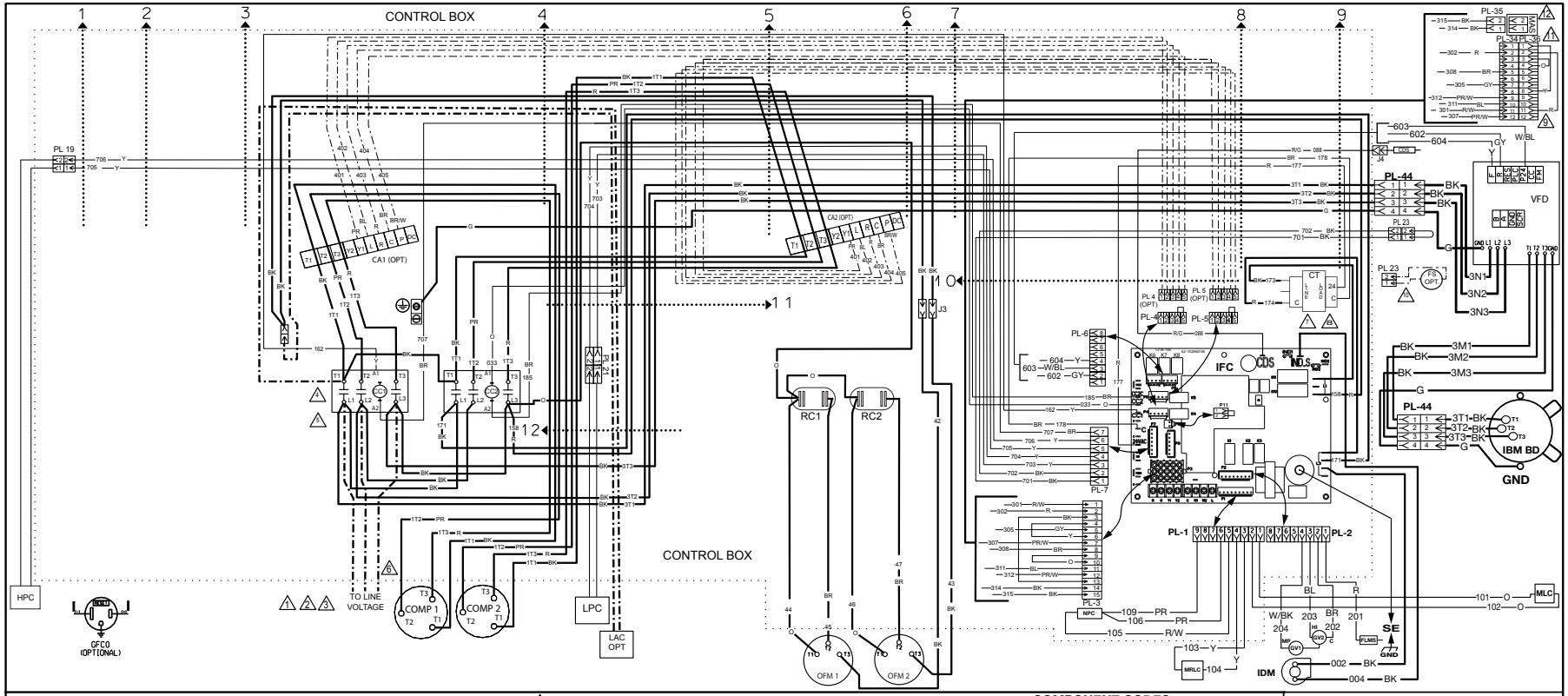

WIRING INFORMATION

LINE VOLTAGE
- -FACTORY STANDARD
- -FACTORY OPTION
- -FIELD INSTALLED

LOW VOLTAGE
- -FACTORY STANDARD
- -FACTORY OPTION
- -FIELD INSTALLED

REPLACEMENT WIRE
-MUST BE THE SAME SIZE AND TYPE OF INSULATION AS ORIGINAL (105C. MIN.)

WARNING
-CABINET MUST BE PER MANENTLY GROUNDED AND CONFORM TO I.E.C., N.E.C., C.E.C., NATIONAL WIRING REGULATIONS, AND LOCAL CODES A'S APPLICABLE

NOTES

1. CONNECTORS SUITABLE FOR USE WITH COPPER CONDUCTORS ONLY.
2. CONNECT FIELD WIRING IN GROUNDED RAIN TIGHT CONDUIT TO FUSED DISCONNECT.
3. CONNECT FIELD WIRE TO COMPRESSOR CONTACTOR (CC1).
4. REMOVE J3 AT (CC1) TO INSTALL LOW AMBIENT ACCESSORY.
5. IF REQUIRED, ATTACH CRANKCASE HEATER ACCESSORY TO CC1 (L1) AND CC1 (L2).
6. COMPRESSOR MOTOR THERMALLY PROTECTED. ALL 3 PHASE MODELS ARE PROTECTED UNDER PRIMARY SINGLE PHASE CONDITIONS.
7. TRANSFORMER FACTORY WIRED AS SHOWN BELOW. CHANGE PRIMARY VOLTAGE CONNECTIONFOR ALTERNATE VOLTAGES, IF REQUIRED.

UNIT VOLTAGES –HZ	TRANSFORMER TERM.
200-220 –50 HZ	200
208 –60 HZ	230
230 –60 HZ	230
380 –60 HZ	400
380-415 -50 HZ	400
460 –60 HZ	460
575 –60 HZ	575

8. LOW VOLTAGE CIRCUIT IS N.E.C. CLASS 2 WITH A CLASS 2 TRANSFORMER, 24VAC 50/60 HZ SUPPLIED.
9. MOTOR FACTORY WIRED FOR CORRECT VOLTAGE.
10. REMOVE PL23 JUMPER FOR OPTIONAL FT LOCATED IN BLOWER COMPARTMENT.
11. REMOVE PL36 FOR ECONOMIZER ACCESSORY. PL34 AND PL36 LOCATED IN RETURN AIR SECTION.
12. MAS ACCESSORY PROVIDED WITH ECONOMIZER. PL35 LOCATED IN BLOWER COMPARTMENT.

COMPONENT CODES

BC	BLOWER CONTACTOR
CA	COMFORT ALERT MODULE
CC	COMPRESSOR CONTACTOR
CCH	CRANKCASE HEATER
CDS	CLOGGED DRAIN SENSOR
CFS	CLOGGED FILTER SWITCH
COMP	COMPRESSOR
CT	CONTROL TRANSFORMER
DAT	DISCHARGE AIR SENSOR
DISC	DISCONNECT SWITCH
FLMS	FLAME SENSOR
FP	FAN PROVING
FS	FREEZE SENSOR
GFCO	GROUND FAULT CONVENIENCE OUTLET
GL	GROUND LUG
GND	GROUND
HPC	HIGH PRESSURE CONTROL
IBM BD	INDOOR BLOWER MOTOR BELT DRIVE
IDM	INDUCED DRAFT MOTOR
IFC	INTEGRATED FURNACE CONTROL
J	JUMPER
LAC	LOW AMBIENT CONTROL
LPC	LOW PRESSURE CONTROL
MRLC	MANUAL RESET LIMIT CONTROL
NPC	NEGATIVE PRESSURE SWITCH
OAT	OUTSIDE AIR SENSOR
OFM	OUTDOOR FAN MOTOR
PL	PLUG
PT	POWER TRANSFORMER
RAT	RETURN AIR SENSOR
RC	RUN CAPACITOR
RTU-C	ROOTOP UNIT CONTROL
SE	SPARK ELECTRODE
VFD	VARIABLE FREQUENCY DRIVE
	WIRE NUT
##	WIRE TIES

WIRE COLOR CODE

BK.....BLACK	G.....GREEN	PR.....PURPLE
BR.....BROWN	GY.....GRAY	R.....RED
BL.....BLUE	O.....ORANGE	W.....WHITE
		Y.....YELLOW

ELECTRICAL WIRING DIAGRAM

GE NON DDC 2-STG VFD 150
208/230/460V 3 PH 60 Hz

APPROVED:	CHECKED:	ORIGINAL RELEASE NO.:
MODELED BY: TCJW	DATE: 02-13-18	R-1071S208
PART NO.: 90-106177-11		REV: 00

FIGURE 40

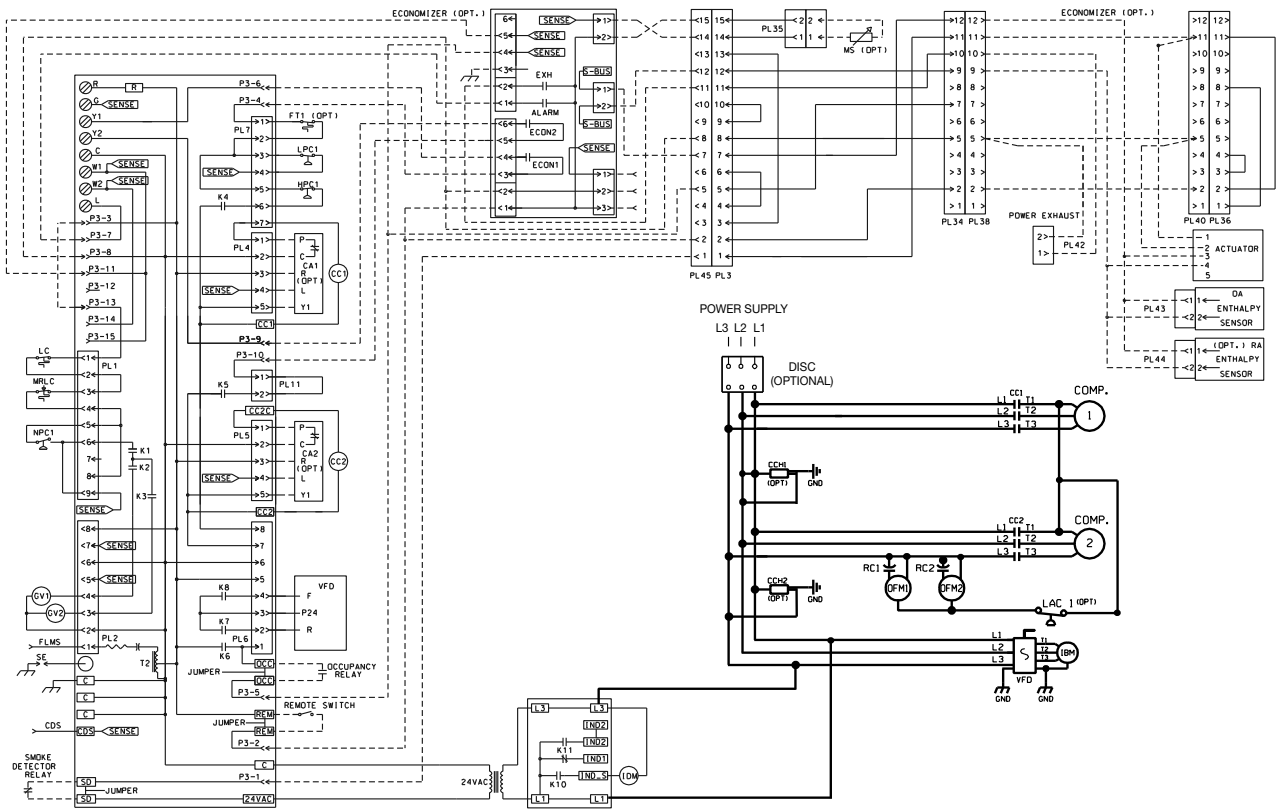

ALARM CODES

CODE	Description	FAULT LEVEL –0,1,2,3*
0	STANDBY	0
c	COMPRESSOR ON – Low (Flashing if in time delay)	0
C	COMPRESSOR ON – High (Flashing if in time delay)	0
E	Economizer Cooling – No Compressor	0
F	CONTINUOUS FAN	0
h	HEAT ON – Low Stage	0
H	GAS HEAT ON – High Stage	0
4	Comfort Alert Code 4 for Compressor Circuit 1	3
5	Comfort Alert Code 5 for Compressor Circuit 1	3
6	Comfort Alert Code 6 for Compressor Circuit 1	3
7	Comfort Alert Code 7 for Compressor Circuit 1	3
8	Comfort Alert Code 8 for Compressor Circuit 1	3
9	Comfort Alert Code 9 for Compressor Circuit 1	3
11	FAILED IGNITION	2
12	LO FLAME SENSE	1
13	FLAME LOST	2
14	UNEXPECTED FLAME	3
15	2nd Stage Gas valve improper voltage	2
20	REFRIGERANT LOW PRESSURE SWITCH OPEN – CIRCUIT 1	2
21	REFRIGERANT LOW PRESSURE SWITCH OPEN – CIRCUIT 2	2
22	MAIN LIMIT OPEN	2
29	REFRIGERANT HIGH PRESSURE SWITCH OPEN – CIRCUIT 1	2
30	REFRIGERANT HIGH PRESSURE SWITCH OPEN – CIRCUIT 2	2
33	MRLC (Rollout Limit) OPEN	2
34	Comfort Alert Code 4 for Compressor Circuit 2	3
35	Comfort Alert Code 5 for Compressor Circuit 2	3
36	Comfort Alert Code 6 for Compressor Circuit 2	3
37	Comfort Alert Code 7 for Compressor Circuit 2	3
38	Comfort Alert Code 8 for Compressor Circuit 2	3
39	Comfort Alert Code 9 for Compressor Circuit 2	3
42	Invalid Thermostat selection	1
44	1st Stage COMBUSTION PRESS SWITCH CLOSED	2
46	1st Stage COMBUSTION PRESS SWITCH OPEN	2
49	FREEZE SWITCH OPEN – CIRCUIT 1	2
50	FREEZE SWITCH OPEN -CIRCUIT 2	2
55	2nd Stage COMBUSTION PRESS SWITCH CLOSED	2
57	2nd Stage COMBUSTION PRESS SWITCH OPEN	2,3
59	Condensate Drain Plugged	3
61	Blower Fault – NO RUN	3
83	Condenser Coil Temp Sensor Fail-OCT	2
84	Outdoor Air Temperature Sensor Fail-OAT	2
88	Emergency Stop Fault	3
93	CONTROL Fault	3
97	Smoke Detection	3

*Fault levels:0 = none, 1=warning, 2= problem, 3=shutdown

WIRING INFORMATION

LINE VOLTAGE
- -FACTORY STANDARD
- -FACTORY OPTION
- -FIELD INST ALLED

LOW VOLTAGE
- -FACTORY STANDARD
- -FACTORY OPTION
- -FIELD INST ALLED

REPLACEMENT WIRE
-MUST BE THE SAME SIZE AND TYPE OF INSULATION AS ORIG INAL (105ºC MIN.)

WARNING
-CABINET MUST BE PERMANE NTLY GROUNDED AND CONFORM TO I.E.C., N.E.C., C.E.C., NATIONAL WIRING REGULATIONS, AND LOCAL CODES AS APPLICABLE.

NOTES

1. CONNECTORS SUITABLE FOR USE WITH COPPER CONDUCTORS ONLY.
2. CONNECT FIELD WIRING IN GROUNDED RAIN TIGHT CONDUIT TO FUSED DISCONNECT.
3. CONNECT FIELD WIRE TO COMPRESSOR CONTACTOR (CC1).
4. REMOVE J3 AT (CC1) TO INSTALL LOW AMBIENT ACCESSORY.
5. IF REQUIRED, ATTACH CRANKCASE HEATER ACCESSORY TO CC1 (L1) AND CC1 (L2).
6. COMPRESSOR MOTOR THERMALLY PROTECTED. ALL 3 PHASE MODELS ARE PROTECTED UNDER PRIMARY SINGLE PHASE CONDITIONS.
7. TRANSFORMER FACTORY WIRED AS SHOWN BELOW. CHANGE PRIMARY VOLTAGE CONNECTIONS FOR ALTERNATE VOLTAGES, IF REQUIRED.

UNIT VOLTAGES - HZ	TRANSFORMER TERM.
200-220 - 50HZ	200
208 - 60HZ	230
230 - 60HZ	230
380 - 60HZ	400
380-415 - 50HZ	400
460 - 60HZ	460
575 - 60HZ	230

8. LOW VOLTAGE CIRCUIT IS N.E.C. CLASS 2 WITH A CLASS 2 TRANSFORMER, 24VAC, 50/60 HZ SUPPLIED.
9. MOTOR FACTORY WIRED FOR CORRECT VOLTAGE.
10. REMOVE PL36 FOR ECONOMIZER ACCESSORY. PL34 AND PL36 LOCATED IN RETURN AIR SECTION.

COMPONENT CODES

CA	COMFORT ALERT MODULE	LPC	LOW PRESSURE CONTROL
CC	COMPRESSOR CONTACTOR	MAS	MIXED AIR SENSOR
CCH	CRANKCASE HEATER	MLC	MAIN LIMIT CONTROL
CDS	CLOGGED DRAIN SENSOR	MRLC	MANUAL RESET LIMIT CONTROL
CFS	CLOGGED FILTER SWITCH	NPC	NEGATIVE PRESSURE SWITCH
COMP	COMPRESSOR	OAT	OUTSIDE AIR SENSOR
CT	CONTROL TRANSFORMER	OFM	OUTDOOR FAN MOTOR
DAT	DISCHARGE AIR SENSOR	PL	PLUG
DISC	DISCONNECT SWITCH	PT	POWER TRANSFORMER
FLMS	FLAME SENSOR	RAT	RETURN AIR SENSOR
FP	FAN PROVING	RC	RUN CAPACITOR
FS	FREEZE SENSOR	RTU-C	ROOFTOP UNIT CONTROL
GFCO	GROUND FAULT CONVENIENCE OUTLET	SE	SPARK ELECTRODE
GL	GROUND LUG	US	UNLOADER SOLENOID
GND	GROUND	VFD	VARIABLE FREQUENCY DRIVE
HPC	HIGH PRESSURE CONTROL		
IBM	INDOOR BLOWER MOTOR		
IDM	INDUCED DRAFT MOTOR		
IFC	INTEGRATED FURNACE CONTROL		
LAC	LOW AMBIENT CONTROL		

WIRE COLOR CODE

BK.....BLACK	G.....GREEN	PR.....PURPLE
BR.....BROWN	GY.....GRAY	R.....RED
BL.....BLUE	O.....ORANGE	W .....WHITE
		Y.....YELLOW

ELECTRICAL WIRING SCHEMATIC

GE NON DDC 2-STG VFD 150
208/230/460V 3 PH 60 Hz

APPROVED:	CHECKED:	ORIGINAL RELEASE NO.:
MODELED BY: JHB	DATE: 3-19-18	R-1071S208
PART NO.: 90-106178-11		REV: 00

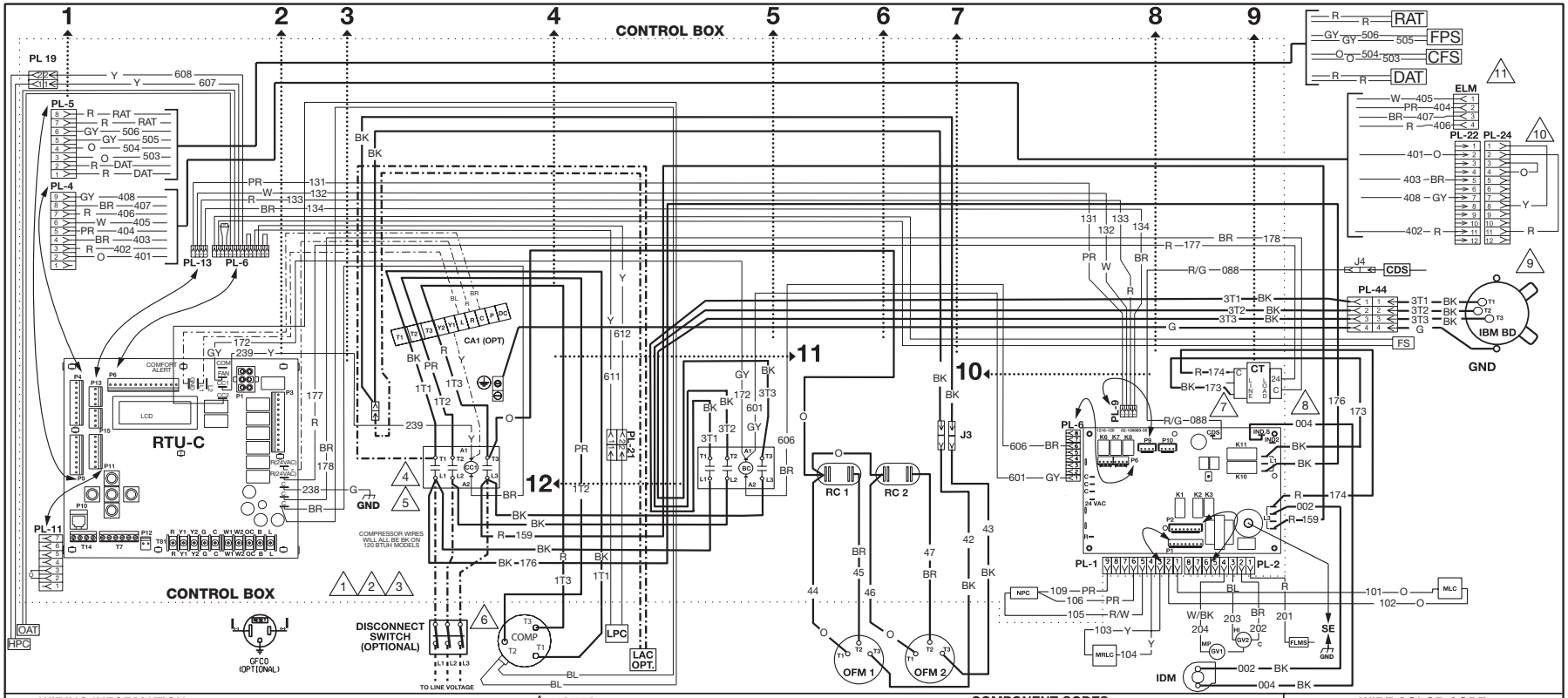

WIRING INFORMATION

LINE VOLTAGE
- -FACTORY STANDARD
- -FACTORY OPTION
- -FIELD INSTALLED

LOW VOLTAGE
- -FACTORY STANDARD
- -FACTORY OPTION
- -FIELD INSTALLED

REPLACEMENT WIRE
-MUST BE THE SAME SIZE AND TYPE OF INSULATION AS ORIGINAL (105°C.MIN.)

WARNING
-CABINET MUST BE PERMANENTLY GROUNDED AND CONFORM TO I.E.C., N.E.C., C.E.C., NATIONAL WIRING REGULATIONS, AND LOCAL CODES A S APPLICABLE.

NOTES

1. CONNECTORS SUITABLE FOR USE WITH COPPER CONDUCTORS ONLY.
2. CONNECT FIELD WIRING IN GROUNDED RAIN TIGHT CONDUIT TO FUSED DISCONNECT.
3. CONNECT FIELD WIRE TO COMPRESSOR CONTACTOR (CC1).
4. REMOVE J3 AT (CC1) TO INSTALL LOW AMBIENT ACCESSORY.
5. IF REQUIRED, ATTACH CRANKCASE HEATER ACCESSORY TO CC1 (L1) AND CC1 (L2).
6. COMPRESSOR MOTOR THERMALLY PROTECTED. ALL 3 PHASE MODELS ARE PROTECTED UNDER PRIMARY SINGLE PHASE CONDITIONS.
7. TRANSFORMER FACTORY WIRED AS SHOWN BELOW. CHANGE PRIMARY VOLTAGE CONNECTION FOR ALTERNATE VOLTAGES, IF REQUIRED.

UNIT VOLTAGES –HZ	TRANSFORMER TERM.
200-220 –50 HZ	200
208 –60 HZ	230
230 –60 HZ	230
380 –60 HZ	400
380-415 -50 HZ	400
460 –60 HZ	460
575 –60 HZ	230

8. LOW VOLTAGE CIRCUIT IS N.E.C. CLASS 2 WITH A CLASS 2 TRANSFORMER, 24VAC 50/60 HZ SUPPLIED.
9. MOTOR FACTORY WIRED FOR CORRECT VOLTAGE.
10. REMOVE PL24 FOR ECONOMIZER ACCESSORY. PL22 AND PL24 LOCATED IN RETURN AIR SECTION.
11. CONNECT TO ECONOMIZER LOGIC MODULE.

COMPONENT CODES

BC	BLOWER CONTACTOR
CA	COMFORT ALERT MODULE
CC	COMPRESSOR CONTACTOR
CCH	CRANKCASE HEATER
CDS	CLOG DRAIN SENSOR
CFS	CLOGGED FILTER SWITCH
COMP	COMPRESSOR
CT	CONTROL TRANSFORMER
DAT	DISCHARGE AIR SENSOR
DISC	DISCONNECT SWITCH
ELM	ECONOMIZER LOGIC MODULE
FLMS	FLAME SENSOR
FP	FAN PROVING SWITCH
FS	FREEZE SENSOR
FT	FREEZE STAT
GFCO	GROUND FAULT CONVENIENCE OUTLET
GL	GROUND LUG
GND	GROUND
GV	GAS VALVE
HPC	HIGH PRESSURE CONTROL
IBM	INDOOR BLOWER MOTOR
IDM	INDUCED DRAFT MOTOR
IFC	INTEGRATED FURNACE CONTROL
J	JUMPER
LAC	LOW AMBIENT CONTROL
LPC	LOW PRESSURE CONTROL
MLC	MAIN LIMIT CONTROL
MRLC	MANUAL RESET LIMIT CONTROL
NPC	NEGATIVE PRESSURE SWITCH
OAT	OUTSIDE AIR SENSOR
OFM	OUTDOOR FAN MOTOR
PL	PLUG
PT	POWER TRANSFORMER
RAT	RETURN AIR SENSOR
RC	RUN CAPACITOR
RTU-C	ROOFTOP UNIT CONTROL
SE	SPARK ELECTRODE
US	UNLOADER SOLENOID
##	WIRE TIES

WIRE COLOR CODE

BK.....BLACK	G.....GREEN	PR.....PURPLE
BR.....BROWN	GY.....GRAY	R.....RED
BL.....BLUE	O.....ORANGE	W.....WHITE
		Y.....YELLOW

ELECTRICAL WIRING DIAGRAM

GE DDC 2-STG 090/102/120
208/230/380/460V, 3PH, 60HZ

GE DDC 2-STG 072/090/102
380-415V, 3PH, 50HZ

APPROVED:	CHECKED:	ORIGINAL RELEASE NO.:
MODELED BY: TCJW	DATE: 11-13-17	R-1071S126
PART NO.: 90-106177-13		REV: 00

FIGURE 42

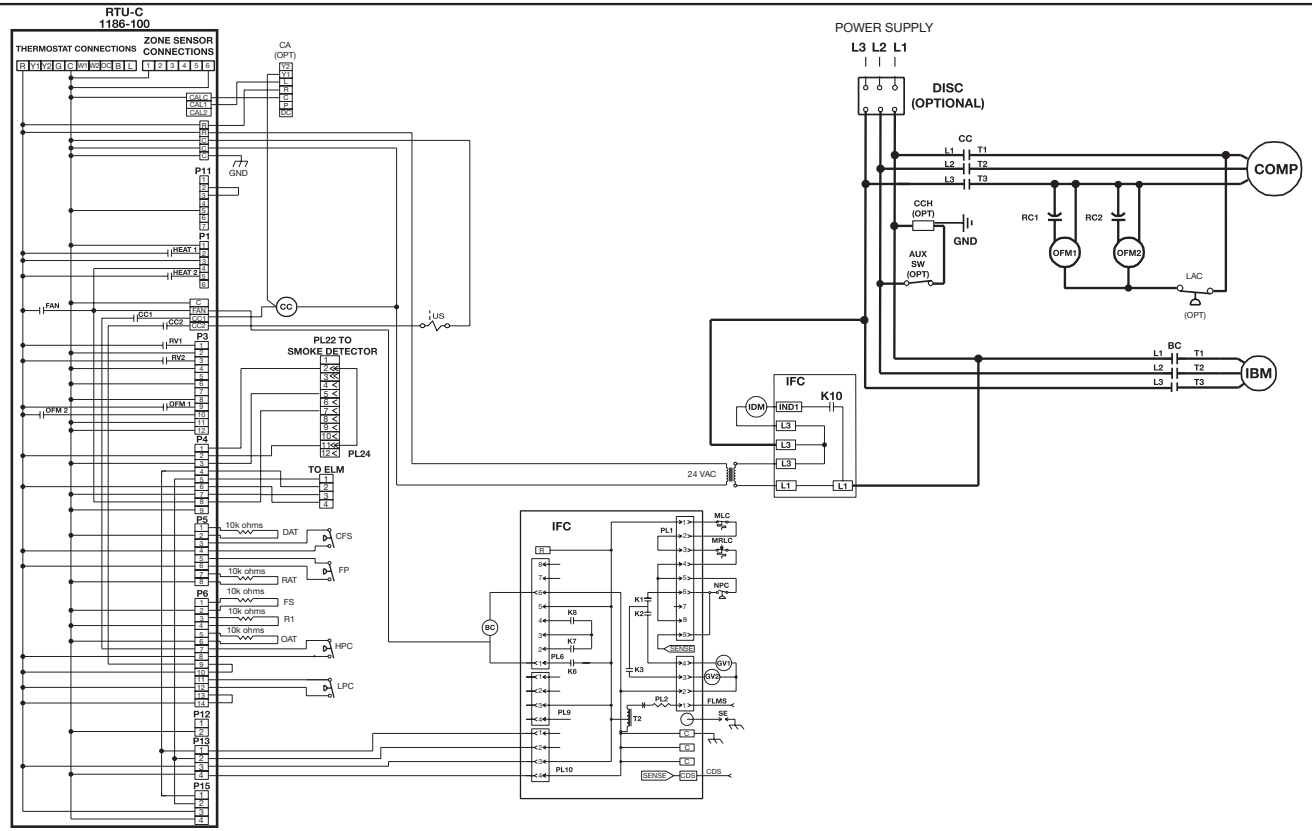

ALARM CODES

CODE	Description	FAULT LEVEL –0,1,2,3*
0	STANDBY	0
c	COMPRESSOR ON – Low (Flashing if in time delay)	0
C	COMPRESSOR ON – High (Flashing if in time delay)	0
E	Economizer Cooling – No Compressor	0
F	CONTINUOUS FAN	0
h	HEAT ON – Low Stage	0
H	GAS HEAT ON – High Stage	0
4	Comfort Alert Code 4 for Compressor Circuit 1	3
5	Comfort Alert Code 5 for Compressor Circuit 1	3
6	Comfort Alert Code 6 for Compressor Circuit 1	3
7	Comfort Alert Code 7 for Compressor Circuit 1	3
8	Comfort Alert Code 8 for Compressor Circuit 1	3
9	Comfort Alert Code 9 for Compressor Circuit 1	3
11	FAILED IGNITION	2
12	LO FLAME SENSE	1
13	FLAME LOST	2
14	UNEXPECTED FLAME	3
15	2nd Stage Gas valve improper voltage	2
20	REFRIGERANT LOW PRESSURE SWITCH OPEN – CIRCUIT 1	2
21	REFRIGERANT LOW PRESSURE SWITCH OPEN – CIRCUIT 2	2
22	MAIN LIMIT OPEN	2
29	REFRIGERANT HIGH PRESSURE SWITCH OPEN – CIRCUIT 1	2
30	REFRIGERANT HIGH PRESSURE SWITCH OPEN – CIRCUIT 2	2
33	MRLC (Rollout Limit) OPEN	2
34	Comfort Alert Code 4 for Compressor Circuit 2	3
35	Comfort Alert Code 5 for Compressor Circuit 2	3
36	Comfort Alert Code 6 for Compressor Circuit 2	3
37	Comfort Alert Code 7 for Compressor Circuit 2	3
38	Comfort Alert Code 8 for Compressor Circuit 2	3
39	Comfort Alert Code 9 for Compressor Circuit 2	3
42	Invalid Thermostat Selection	1
44	1st Stage COMBUSTION PRESS SWITCH CLOSED	2
46	1st Stage COMBUSTION PRESS SWITCH OPEN	2
49	FREEZE SWITCH OPEN – CIRCUIT 1	2
50	FREEZE SWITCH OPEN -CIRCUIT 2	2
55	2nd Stage COMBUSTION PRESS SWITCH CLOSED	2
57	2nd Stage COMBUSTION PRESS SWITCH OPEN	2,3
59	Condensate Drain Plugged	3
61	Blower Fault – NO RUN	3
83	Condenser Coil Temp Sensor Fail-OCT	2
84	Outdoor Air Temperature Sensor Fail-OAT	2
88	Emergency Stop Fault	3
93	CONTROL Fault	3
97	Smoke Detection	3

*Fault levels:0 = none, 1=warning, 2= problem, 3=shutdown

WIRING INFORMATION

LINE VOLTAGE
- -FACTORY STANDARD
- -FACTORY OPTION
- -FIELD INSTALLED

LOW VOLTAGE
- -FACTORY STANDARD
- -FACTORY OPTION
- -FIELD INSTALLED

REPLACEMENT WIRE
-MUST BE THE SAME SIZE AND TYPE OF I NSULATION AS ORIGINAL (105°C MIN.)

WARNING
-CABINET MUST BE PERMANE NTLY GROUNDED AND CONFORM TO I.E.C., N.E.C., C.E.C., NATIONAL WIRING REGULATIONS, AND LOCAL CODES A S APPLICABLE.

NOTES

1. CONNECTORS SUITABLE FOR USE WITH COPPER CONDUCTORS ONLY.
2. CONNECT FIELD WIRING IN GROUNDED RAIN TIGHT CONDUIT TO FUSED DISCONNECT.
3. CONNECT FIELD WIRE TO COMPRESSOR CONTACTOR (CC1).
4. REMOVE J3 AT (CC1) TO INSTALL LOW AMBIENT ACCESSORY.
5. IF REQUIRED, ATTACH CRANKCASE HEATER ACCESSORY TO CC1 (L1) AND CC1 (L2).
6. COMPRESSOR MOTOR THERMALLY PROTECTED. ALL 3 PHASE MODELS ARE PROTECTED UNDER PRIMARY SINGLE PHASE CONDITIONS.
7. TRANSFORMER FACTORY WIRED AS SHOWN BELOW. CHANGE PRIMARY VOLTAGE CONNECTIONS FOR ALTERNATE VOLTAGES, IF REQUIRED.

UNIT VOLTAGES - HZ	TRANSFORMER TERM.
200-220 - 50HZ	200
208 - 60HZ	230
230 - 60HZ	230
380 - 60HZ	400
380-415 - 50HZ	400
460 - 60HZ	460
575 - 60HZ	575

8. LOW VOLTAGE CIRCUIT IS N.E.C. CLASS 2 WITH A CLASS 2 TRANSFORMER, 24VAC, 50/60 HZ SUPPLIED.
9. MOTOR FACTORY WIRED FOR CORRECT VOLTAGE.
10. REMOVE PL24 FOR ECONOMIZER ACCESSORY. PL22 AND PL24 LOCATED IN RETURN AIR SECTION.

COMPONENT CODES

BC	BLOWER CONTACTOR
CA	COMFORT ALERT MODULE
CC	COMPRESSOR CONTACTOR
CCH	CRANKCASE HEATER
CDS	CLOGGED DRAIN SENSOR
CFS	CLOGGED FILTER SWITCH
COMP	COMPRESSOR
CT	CONTROL TRANSFORMER
DAT	DISCHARGE AIR SENSOR
DISC	DISCONNECT SWITCH
FLMS	FLAME SENSOR
FP	FAN PROVING
FS	FREEZE SENSOR
GFCO	GROUND FAULT CONVENIENCE OUTLET
GL	GROUND LUG
GND	GROUND
GV	GAS VALVE
HPC	HIGH PRESSURE CONTROL
IBM	INDOOR BLOWER MOTOR
IDM	INDUCED DRAFT MOTOR
IFC	INTEGRATED FURNACE CONTROL
LAC	LOW AMBIENT CONTROL
LPC	LOW PRESSURE CONTROL
MAS	MIXED AIR SENSOR
MLC	MAIN LIMIT CONTROL
MRLC	MANUAL RESET LIMIT CONTROL
NPC	NEGATIVE PRESSURE SWITCH
OAT	OUTSIDE AIR SENSOR
OFM	OUTDOOR FAN MOTOR
PL	PLUG
PT	POWER TRANSFORMER
RAT	RETURN AIR SENSOR
RC	RUN CAPACITOR
RTU-C	ROOFTOP UNIT CONTROL
SE	SPARK ELECTRODE
US	UNLOADER SOLENOID

WIRE COLOR CODE

BK.....BLACK	G.....GREEN	PR.....PURPLE
BR.....BROWN	G Y .....GRAY	R.....RED
BL.....BLUE	O.....ORANGE	W .....WHITE
		Y .....YELLOW

ELECTRICAL WIRING SCHEMATIC

GE DDC 2 STG 090/102/120
208/230/380/460V, 3PH, 60HZ

GE DDC 2 STG 072/090/102
380-415V, 3PH, 50HZ

APPROVED:	CHECKED:	ORIGINAL RELEASE NO.:
MODELED BY: TCJW	DATE: 11-14-17	R-1071S126
PART NO.: 90-106178-13		REV: 01

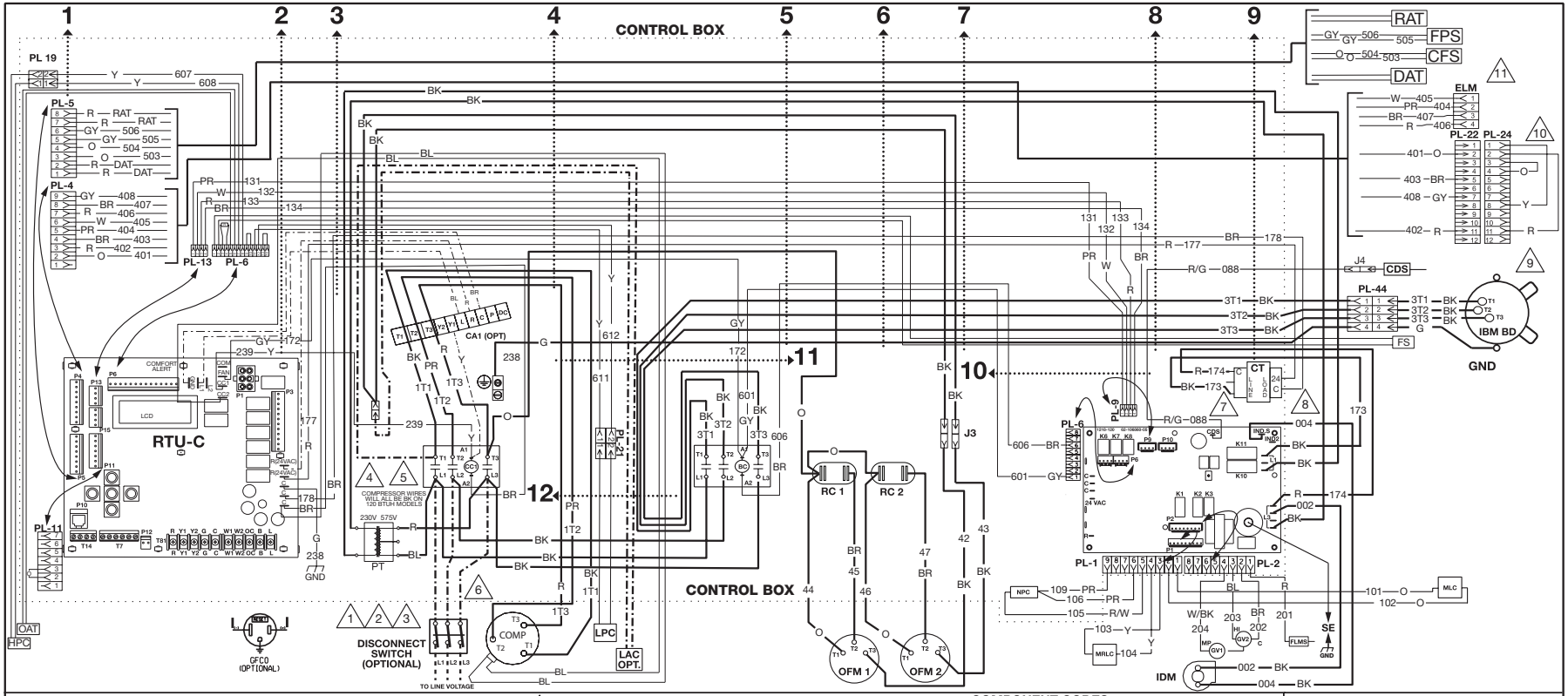

WIRING INFORMATION

LINE VOLTAGE
- -FACTORY STANDARD
- -FACTORY OPTION
- -FIELD INSTALLED

LOW VOLTAGE
- -FACTORY STANDARD
- -FACTORY OPTION
- -FIELD INSTALLED

REPLACEMENT WIRE
-MUST BE THE SAME SIZE AND TYPE OF INSULATION AS ORIGINAL (105°C.MIN.)

WARNING
-CABINET MUST BE PERMANENTLY GROUNDED AND CONFORM TO I.E.C., N.E.C., C.E.C., NATIONAL WIRING REGULATIONS, AND LOCAL CODES A S APPLICABLE.

△ NOTES

1. CONNECTORS SUITABLE FOR USE WITH COPPER CONDUCTORS ONLY.
2. CONNECT FIELD WIRING IN GROUNDED RAIN TIGHT CONDUIT TO FUSED DISCONNECT.
3. CONNECT FIELD WIRE TO COMPRESSOR CONTACTOR (CC1).
4. REMOVE J3 AT (CC1) TO INSTALL LOW AMBIENT ACCESSORY.
5. IF REQUIRED, ATTACH CRANKCASE HEATER ACCESSORY TO CC1 (L1) AND CC1 (L2).
6. COMPRESSOR MOTOR THERMALLY PROTECTED. ALL 3 PHASE MODELS ARE PROTECTED UNDER PRIMARY SINGLE PHASE CONDITIONS.
7. TRANSFORMER FACTORY WIRED AS SHOWN BELOW. CHANGE PRIMARY VOLTAGE CONNECTION FOR ALTERNATE VOLTAGES, IF REQUIRED.

UNIT VOLTAGES –HZ	TRANSFORMER TERM.
200-220 –50 HZ	200
208 –60 HZ	230
230 –60 HZ	230
380 –60 HZ	400
380-415 -50 HZ	400
460 –60 HZ	460
575 –60 HZ	230

8. LOW VOLTAGE CIRCUIT IS N.E.C. CLASS 2 WITH A CLASS 2 TRANSFORMER, 24VAC 50/60 HZ SUPPLIED.
9. MOTOR FACTORY WIRED FOR CORRECT VOLTAGE.
10. REMOVE PL24 FOR ECONOMIZER ACCESSORY. PL22 AND PL24 LOCATED IN RETURN AIR SECTION.
11. CONNECT TO ECONOMIZER LOGIC MODULE.

COMPONENT CODES

BC	BLOWER CONTACTOR
CA	COMFORT ALERT MODULE
CC	COMPRESSOR CONTACTOR
CCH	CRANKCASE HEATER
CDS	CLOG DRAIN SENSOR
CFS	CLOGGED FILTER SWITCH
COMP	COMPRESSOR
CT	CONTROL TRANSFORMER
DAT	DISCHARGE AIR SENSOR
DISC	DISCONNECT SWITCH
ELM	ECONOMIZER LOGIC MODULE
FLMS	FLAME SENSOR
FP	FAN PROVING SWITCH
FS	FREEZE SENSOR
FT	FREEZE STAT
GFCO	GROUND FAULT CONVENIENCE OUTLET
GL	GROUND LUG
GND	GROUND
GV	GAS VALVE
HPC	HIGH PRESSURE CONTROL
IBM	INDOOR BLOWER MOTOR
IDM	INDUCED DRAFT MOTOR
IFC	INTEGRATED FURNACE CONTROL
J	JUMPER
LAC	LOW AMBIENT CONTROL
LPC	LOW PRESSURE CONTROL
MLC	MAIN LIMIT CONTROL
MRLC	MANUAL RESET LIMIT CONTROL
NPC	NEGATIVE PRESSURE SWITCH
OAT	OUTSIDE AIR SENSOR
OFM	OUTDOOR FAN MOTOR
PL	PLUG
PT	POWER TRANSFORMER
RAT	RETURN AIR SENSOR
RC	RUN CAPACITOR
RTU-C	ROOFTOP UNIT CONTROL
SE	SPARK ELECTRODE
US	UNLOADER SOLENOID
##	WIRE TIES

WIRE COLOR CODE

BK.....BLACK	G.....GREEN	PR.....PURPLE
BR.....BROWN	GY.....GRAY	R.....RED
BL.....BLUE	O.....ORANGE	W.....WHITE
		Y.....YELLOW

ELECTRICAL WIRING DIAGRAM

GE DDC 2-STG 090/102/120
575V, 3PH, 60HZ

APPROVED:	CHECKED:	ORIGINAL RELEASE NO.:
MODELED BY: TCJW	DATE: 11-15-17	R-1071S126
PART NO.: 90-106177-14		REV: 00

FIGURE 44

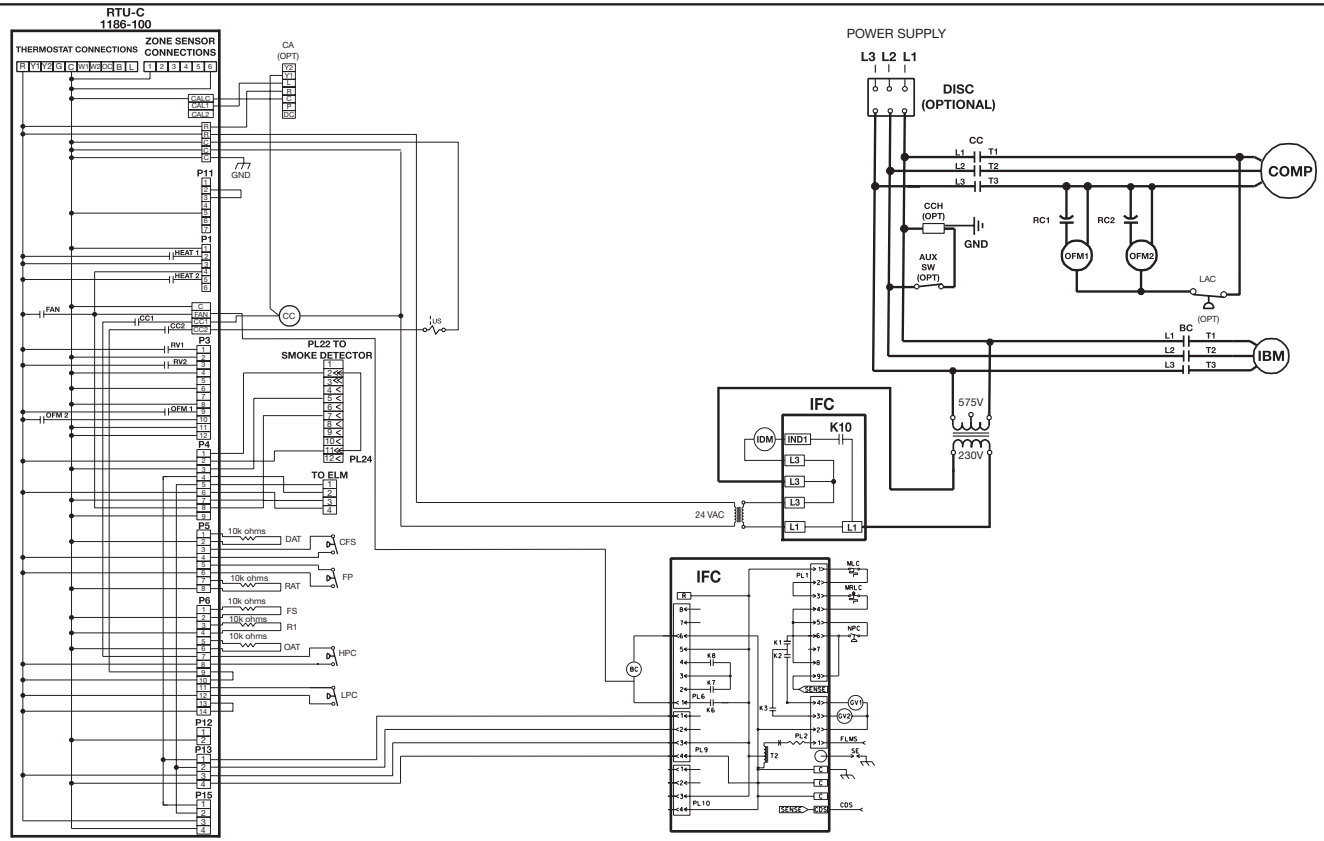

ALARM CODES

CODE	Description	FAULT LEVEL – 0,1,2,3*
0	STANDBY	0
c	COMPRESSOR ON – Low (Flashing if in time delay)	0
C	COMPRESSOR ON – High (Flashing if in time delay)	0
E	Economizer Cooling – No Compressor	0
F	CONTINUOUS FAN	0
h	HEAT ON – Low Stage	0
H	GAS HEAT ON – High Stage	0
4	Comfort Alert Code 4 for Compressor Circuit 1	3
5	Comfort Alert Code 5 for Compressor Circuit 1	3
6	Comfort Alert Code 6 for Compressor Circuit 1	3
7	Comfort Alert Code 7 for Compressor Circuit 1	3
8	Comfort Alert Code 8 for Compressor Circuit 1	3
9	Comfort Alert Code 9 for Compressor Circuit 1	3
11	FAILED IGNITION	2
12	LO FLAME SENSE	1
13	FLAME LOST	2
14	UNEXPECTED FLAME	3
15	2nd Stage Gas valve improper voltage	2
20	REFRIGERANT LOW PRESSURE SWITCH OPEN – CIRCUIT 1	2
21	REFRIGERANT LOW PRESSURE SWITCH OPEN – CIRCUIT 2	2
22	MAIN LIMIT OPEN	2
29	REFRIGERANT HIGH PRESSURE SWITCH OPEN – CIRCUIT 1	2
30	REFRIGERANT HIGH PRESSURE SWITCH OPEN – CIRCUIT 2	2
33	MRLC (Rollout Limit) OPEN	2
34	Comfort Alert Code 4 for Compressor Circuit 2	3
35	Comfort Alert Code 5 for Compressor Circuit 2	3
36	Comfort Alert Code 6 for Compressor Circuit 2	3
37	Comfort Alert Code 7 for Compressor Circuit 2	3
38	Comfort Alert Code 8 for Compressor Circuit 2	3
39	Comfort Alert Code 9 for Compressor Circuit 2	3
42	Invalid Thermostat selection	1
44	1st Stage COMBUSTION PRESS SWITCH CLOSED	2
46	1st Stage COMBUSTION PRESS SWITCH OPEN	2
49	FREEZE SWITCH OPEN – CIRCUIT 1	2
50	FREEZE SWITCH OPEN -CIRCUIT 2	2
55	2nd Stage COMBUSTION PRESS SWITCH CLOSED	2
57	2nd Stage COMBUSTION PRESS SWITCH OPEN	2,3
59	Condensate Drain Plugged	3
61	Blower Fault – NO RUN	3
83	Condenser Coil Temp Sensor Fail-OCT	2
84	Outdoor Air Temperature Sensor Fail-OAT	2
88	Emergency Stop Fault	3
93	CONTROL Fault	3
97	Smoke Detection	3

*Fault levels:0 = none, 1=warning, 2= problem, 3=shutdown

WIRING INFORMATION

LINE VOLTAGE
- -FACTORY STANDARD
- -FACTORY OPTION
- -FIELD INSTALLED

LOW VOLTAGE
- -FACTORY STANDARD
- -FACTORY OPTION
- -FIELD INSTALLED

REPLACEMENT WIRE
-MUST BE THE SAME SIZE AND TYPE OF I NSULATION AS ORIGINAL (105°C MIN.)

WARNING
-CABINET MUST BE PERMANE NTLY GROUNDED AND CONFORM TO I.E.C., N.E.C., C.E.C., NATIONAL WIRING REGULATIONS, AND LOCAL CODES A S APPLICABLE.

NOTES

1. CONNECTORS SUITABLE FOR USE WITH COPPER CONDUCTORS ONLY.
2. CONNECT FIELD WIRING IN GROUNDED RAIN TIGHT CONDUIT TO FUSED DISCONNECT.
3. CONNECT FIELD WIRE TO COMPRESSOR CONTACTOR (CC1).
4. REMOVE J3 AT (CC1) TO INSTALL LOW AMBIENT ACCESSORY.
5. IF REQUIRED, ATTACH CRANKCASE HEATER ACCESSORY TO CC1 (L1) AND CC1 (L2).
6. COMPRESSOR MOTOR THERMALLY PROTECTED. ALL 3 PHASE MODELS ARE PROTECTED UNDER PRIMARY SINGLE PHASE CONDITIONS.
7. TRANSFORMER FACTORY WIRED AS SHOWN BELOW. CHANGE PRIMARY VOLTAGE CONNECTIONS FOR ALTERNATE VOLTAGES, IF REQUIRED.

UNIT VOLTAGES - HZ	TRANSFORMER TERM.
200-220 - 50HZ	200
208 - 60HZ	230
230 - 60HZ	230
380 - 60HZ	400
380-415 - 50HZ	400
460 - 60HZ	460
575 - 60HZ	230

8. LOW VOLTAGE CIRCUIT IS N.E.C. CLASS 2 WITH A CLASS 2 TRANSFORMER, 24VAC, 50/60 HZ SUPPLIED.
9. MOTOR FACTORY WIRED FOR CORRECT VOLTAGE.
10. REMOVE PL24 FOR ECONOMIZER ACCESSORY. PL22 AND PL24 LOCATED IN RETURN AIR SECTION.

COMPONENT CODES

BC	BLOWER CONTACTOR
CA	COMFORT ALERT MODULE
CC	COMPRESSOR CONTACTOR
CCH	CRANKCASE HEATER
CDS	CLOGGED DRAIN SENSOR
CFS	CLOGGED FILTER SWITCH
COMP	COMPRESSOR
CT	CONTROL TRANSFORMER
DAT	DISCHARGE AIR SENSOR
DISC	DISCONNECT SWITCH
FLMS	FLAME SENSOR
FP	FAN PROVING
FS	FREEZE SENSOR
GFCO	GROUND FAULT CONVENIENCE OUTLET
GL	GROUND LUG
GND	GROUND
GV	GAS VALVE
HPC	HIGH PRESSURE CONTROL
IBM	INDOOR BLOWER MOTOR
IDM	INDUCED DRAFT MOTOR
IFC	INTEGRATED FURNACE CONTROL
LAC	LOW AMBIENT CONTROL
LPC	LOW PRESSURE CONTROL
MAS	MIXED AIR SENSOR
MLC	MAIN LIMIT CONTROL
MRLC	MANUAL RESET LIMIT CONTROL
NPC	NEGATIVE PRESSURE SWITCH
OAT	OUTSIDE AIR SENSOR
OFM	OUTDOOR FAN MOTOR
PL	PLUG
PT	POWER TRANSFORMER
RAT	RETURN AIR SENSOR
RC	RUN CAPACITOR
RTU-C	ROOFTOP UNIT CONTROL
SE	SPARK ELECTRODE
US	UNLOADER SOLENOID

WIRE COLOR CODE

BK.....BLACK	G.....GREEN	PR.....PURPLE
BR.....BROWN	GY .....GRAY	R.....RED
BL.....BLUE	O.....ORANGE	W .....WHITE
		Y.....YELLOW

ELECTRICAL WIRING SCHEMATIC

GE DDC 2-STG 090/102/120
575V, 3PH, 60HZ

APPROVED:	CHECKED:	ORIGINAL RELEASE NO.:
MODELED BY: TCJW	DATE: 11-20-17	R-1071S126
PART NO.: 90-106178-14		REV: 01

FIGURE 45

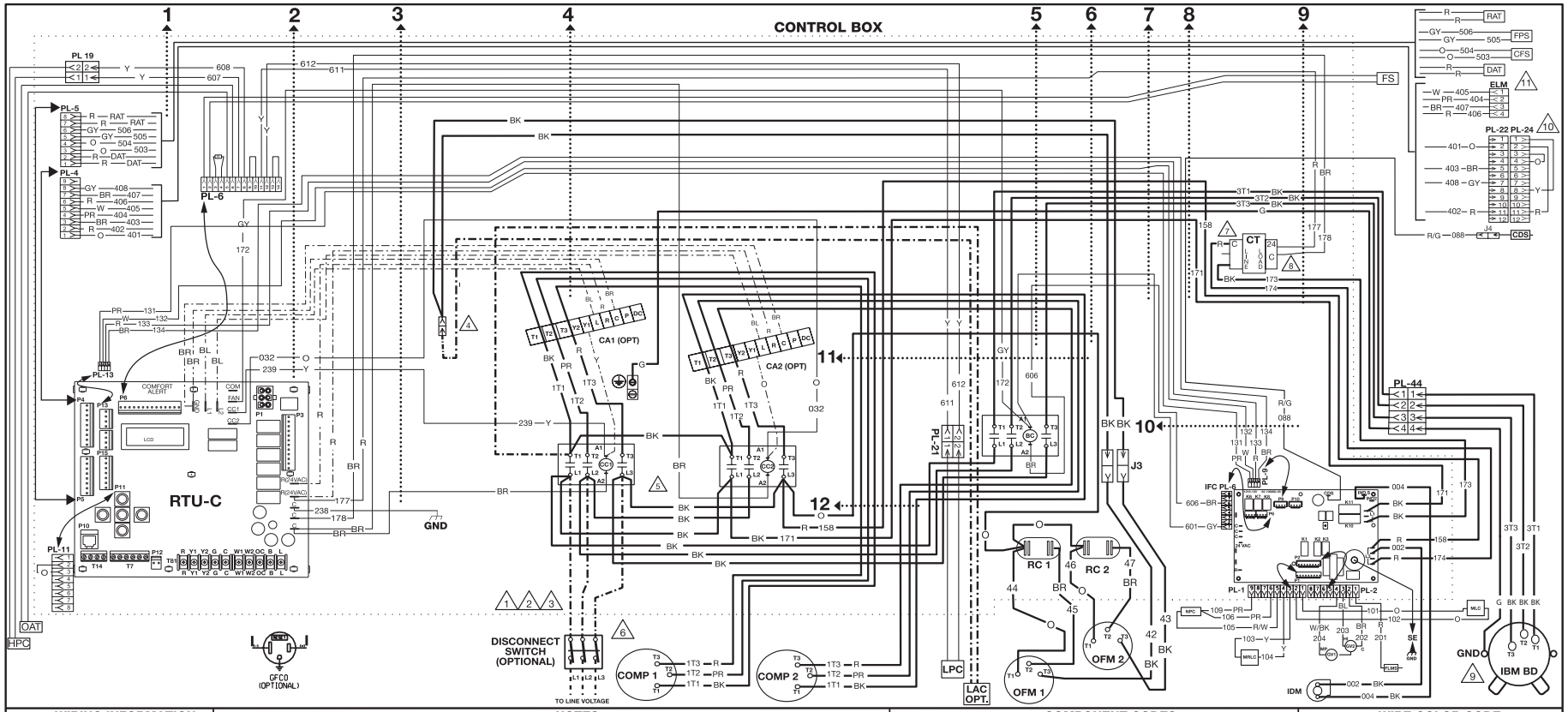

WIRING INFORMATION

LINE VOLTAGE
- -FACTORY STANDARD
- -FACTORY OPTION
- -FIELD INSTALLED

LOW VOLTAGE
- -FACTORY STANDARD
- -FACTORY OPTION
- -FIELD INSTALLED

REPLACEMENT WIRE
-MUST BE THE SAME SIZE AND TYPE OF INSULATION AS ORIGINAL (105°C MIN.)

WARNING
-CABINET MUST BE PERMANENTLY GROUNDED AND CONFORM TO I.E.C., N.E.C., C.E.C., NATIONAL WIRING REGULATIONS, AND LOCAL CODES AS APPLICABLE.

NOTES

1. CONNECTORS SUITABLE FOR USE WITH COPPER CONDUCTORS ONLY.
2. CONNECT FIELD WIRING IN GROUNDED RAIN TIGHT CONDUIT TO FUSED DISCONNECT.
3. CONNECT FIELD WIRE TO COMPRESSOR CONTACTOR (CC1).
4. REMOVE J3 AT CC1 (T1) TO INSTALL LOW AMBIENT ACCESSORY.
5. IF REQUIRED, ATTACH CRANKCASE HEATER ACCESSORY TO CC1 (L1) AND CC1 (L2).
6. COMPRESSOR MOTOR THERMALLY PROTECTED. ALL 3 PHASE MODELS ARE PROTECTED UNDER PRIMARY SINGLE PHASE CONDITIONS.
7. TRANSFORMER FACTORY WIRED AS SHOWN BELOW. CHANGE PRIMARY VOLTAGE CONNECTIONS FOR ALTERNATE VOLTAGES, IF REQUIRED.

UNIT VOLTAGES - HZ	TRANSFORMER TERM.
200-220 - 50HZ	200
208 - 60HZ	230
230 - 60HZ	230
380 - 60HZ	400
380-415 - 50HZ	400
460 - 60HZ	460
575 - 60HZ	230

8. LOW VOLTAGE CIRCUIT IS N.E.C. CLASS 2 WITH A CLASS 2 TRANSFORMER, 24VAC, 50/60 HZ SUPPLIED.
9. MOTOR FACTORY WIRED FOR CORRECT VOLTAGE.
10. REMOVE PL24 FOR ECONOMIZER ACCESSORY. PL22 AND PL24 LOCATED IN RETURN AIR SECTION.
11. CONNECT TO ECONOMIZER LOGIC MODULE.

COMPONENT CODES

AR	ACCESSORY RELAY	LLS	LIQUID LINE SENSOR
BC	BLOWER CONTACTOR	LPC	LOW PRESSURE CONTROL
CA	COMFORT ALERT MODULE	MAS	MIXED AIR SENSOR
CC	COMPRESSOR CONTACTOR	MRLC	MANUAL RESET LIMIT CONTROL
CCH	CRANKCASE HEATER	NPC	NEGATIVE PRESSURE SWITCH
CDS	CLOGGED DRAIN SENSOR	OAT	OUTSIDE AIR SENSOR
CFS	CLOGGED FILTER SWITCH	OFM	OUTDOOR FAN MOTOR
COMP	COMPRESSOR	OFMC	OUTDOOR FAN MOTOR CONTROL
CT	CONTROL TRANSFORMER	PL	PLUG
DAT	DISCHARGE AIR SENSOR	PT	POWER TRANSFORMER
DISC	DISCONNECT SWITCH	RAT	RETURN AIR SENSOR
FLMS	FLAME SENSOR	RC	RUN CAPACITOR
FP	FAN PROVING	RTU-C	ROOFTOP UNIT CONTROL
FS	FREEZE SENSOR	SE	SPARK ELECTRODE
FT	FREEZE STAT	TB	TERMINAL BLOCK
GFCO	GROUND FAULT CONVENIENCE OUTLET	VFD	VARIBALE FREQUENCY DRIVE
GL	GROUND LUG	##	WIRE TIE
GND	GROUND		
HPC	HIGH PRESSURE CONTROL		
IBM	INDOOR BLOWER MOTOR		
IDM	INDUCED DRAFT MOTOR		
IFC	INTEGRATED FURNACE CONTROL		
LAC	LOW AMBIENT CONTROL		

WIRE COLOR CODE

BK.....BLACK	G.....GREEN	PR.....PURPLE
BR.....BROWN	GY.....GRAY	R.....RED
BL.....BLUE	O.....ORANGE	W .....WHITE
		Y.....YELLOW

ELECTRICAL WIRING DIAGRAM

GE DDC 2 STG, 150
208/230/380/460 V, 3PH, 60HZ

GE DDC 2 STG,, 120
380-415V, 3PH, 50HZ

APPROVED:	CHECKED:	ORIGINAL RELEASE NO.:
MODELED BY: JHB	DATE: 3/25/18	R-1071S211
PART NO.: 90-106177-15		REV: 00

FIGURE 46

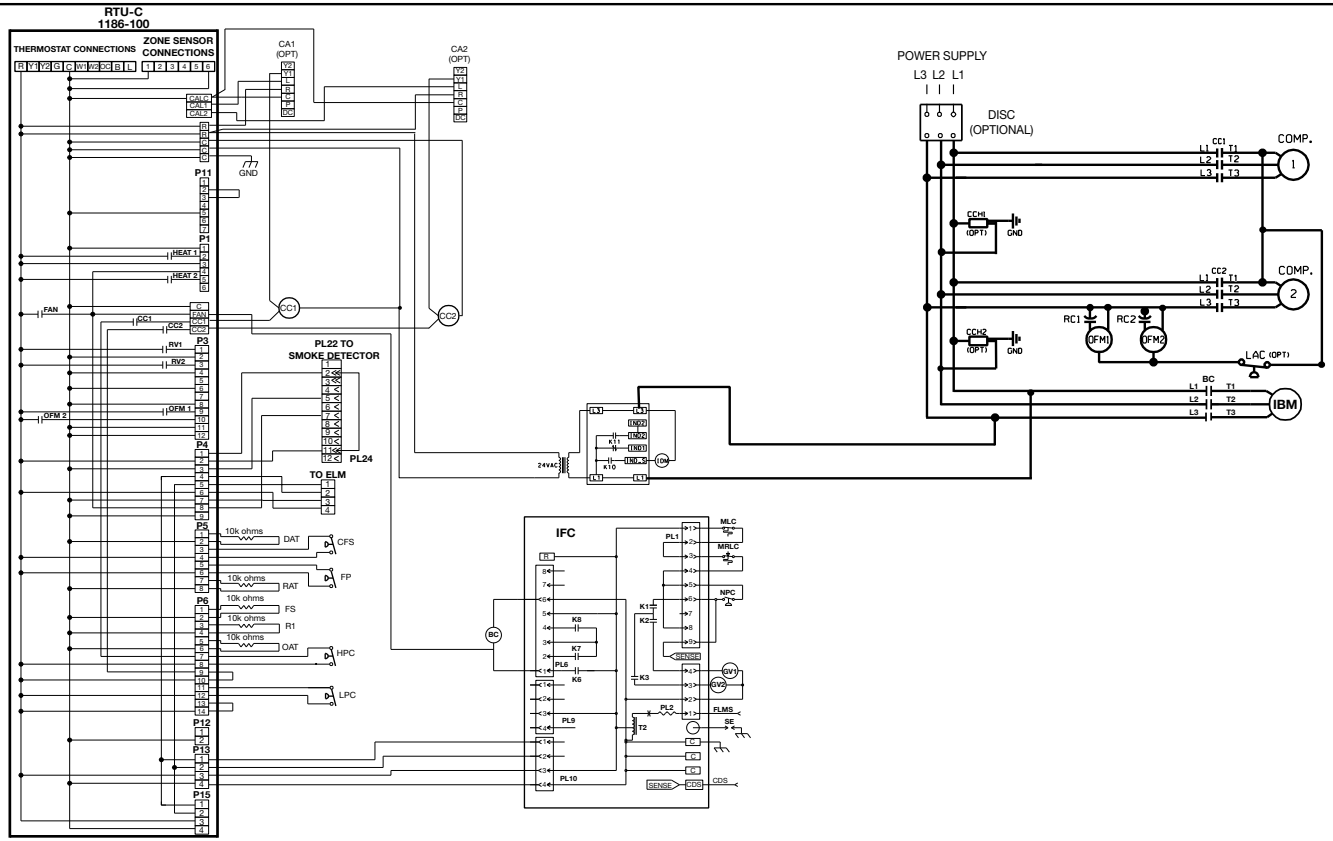

ALARM CODES

CODE	Description	FAULT LEVEL –0,1,2,3*
0	STANDBY	0
c	COMPRESSOR ON – Low (Flashing if in time delay)	0
C	COMPRESSOR ON – High (Flashing if in time delay)	0
E	Economizer Cooling – No Compressor	0
F	CONTINUOUS FAN	0
h	HEAT ON – Low Stage	0
H	GAS HEAT ON – High Stage	0
4	Comfort Alert Code 4 for Compressor Circuit 1	3
5	Comfort Alert Code 5 for Compressor Circuit 1	3
6	Comfort Alert Code 6 for Compressor Circuit 1	3
7	Comfort Alert Code 7 for Compressor Circuit 1	3
8	Comfort Alert Code 8 for Compressor Circuit 1	3
9	Comfort Alert Code 9 for Compressor Circuit 1	3
11	FAILED IGNITION	2
12	LO FLAME SENSE	1
13	FLAME LOST	2
14	UNEXPECTED FLAME	3
15	2nd Stage Gas valve improper voltage	2
20	REFRIGERANT LOW PRESSURE SWITCH OPEN – CIRCUIT 1	2
21	REFRIGERANT LOW PRESSURE SWITCH OPEN – CIRCUIT 2	2
22	MAIN LIMIT OPEN	2
29	REFRIGERANT HIGH PRESSURE SWITCH OPEN – CIRCUIT 1	2
30	REFRIGERANT HIGH PRESSURE SWITCH OPEN – CIRCUIT 2	2
33	MRLC (Rollout Limit) OPEN	2
34	Comfort Alert Code 4 for Compressor Circuit 2	3
35	Comfort Alert Code 5 for Compressor Circuit 2	3
36	Comfort Alert Code 6 for Compressor Circuit 2	3
37	Comfort Alert Code 7 for Compressor Circuit 2	3
38	Comfort Alert Code 8 for Compressor Circuit 2	3
39	Comfort Alert Code 9 for Compressor Circuit 2	3
42	Invalid Thermostat Selection	1
44	1st Stage COMBUSTION PRESS SWITCH CLOSED	2
46	1st Stage COMBUSTION PRESS SWITCH OPEN	2
49	FREEZE SWITCH OPEN – CIRCUIT 1	2
50	FREEZE SWITCH OPEN -CIRCUIT 2	2
55	2nd Stage COMBUSTION PRESS SWITCH CLOSED	2
57	2nd Stage COMBUSTION PRESS SWITCH OPEN	2,3
59	Condensate Drain Plugged	3
61	Blower Fault – NO RUN	3
83	Condenser Coil Temp Sensor Fail-OCT	2
84	Outdoor Air Temperature Sensor Fail-OAT	2
88	Emergency Stop Fault	3
93	CONTROL Fault	3
97	Smoke Detection	3

*Fault levels:0 = none, 1=warning, 2= problem, 3=shutdown

WIRING INFORMATION

LINE VOLTAGE
- -FACTORY STANDARD
- -FACTORY OPTION
- -FIELD INST ALLED

LOW VOLTAGE
- -FACTORY STANDARD
- -FACTORY OPTION
- -FIELD INST ALLED

REPLACEMENT WIRE
-MUST BE THE SAME SIZE AND TYPE OF INSULATION AS ORIG INAL (105ºC MIN.)

WARNING
-CABINET MUST BE PERMANE NTLY GROUNDED AND CONFORM TO I.E.C., N.E.C., C.E.C., NATIONAL WIRING REGULATIONS, AND LOCAL CODES A S APPLICABLE.

NOTES

1. CONNECTORS SUITABLE FOR USE WITH COPPER CONDUCTORS ONLY.
2. CONNECT FIELD WIRING IN GROUNDED RAIN TIGHT CONDUIT TO FUSED DISCONNECT.
3. CONNECT FIELD WIRE TO COMPRESSOR CONTACTOR (CC1).
4. REMOVE J3 AT (CC1) TO INSTALL LOW AMBIENT ACCESSORY.
5. IF REQUIRED, ATTACH CRANKCASE HEATER ACCESSORY TO CC1 (L1) AND CC1 (L2).
6. COMPRESSOR MOTOR THERMALLY PROTECTED. ALL 3 PHASE MODELS ARE PROTECTED UNDER PRIMARY SINGLE PHASE CONDITIONS.
7. TRANSFORMER FACTORY WIRED AS SHOWN BELOW. CHANGE PRIMARY VOLTAGE CONNECTIONS FOR ALTERNATE VOLTAGES, IF REQUIRED.

UNIT VOLTAGES - HZ	TRANSFORMER TERM.
200-220 - 50HZ	200
208 - 60HZ	230
230 - 60HZ	230
380 - 60HZ	400
380-415 - 50HZ	400
460 - 60HZ	460
575 - 60HZ	575

8. LOW VOLTAGE CIRCUIT IS N.E.C. CLASS 2 WITH A CLASS 2 TRANSFORMER, 24VAC, 50/60 HZ SUPPLIED.
9. MOTOR FACTORY WIRED FOR CORRECT VOLTAGE.
10. REMOVE PL24 FOR ECONOMIZER ACCESSORY. PL22 AND PL24 LOCATED IN RETURN AIR SECTION.

COMPONENT CODES

BC	BLOWER CONTACTOR
CA	COMFORT ALERT MODULE
CC	COMPRESSOR CONTACTOR
CCH	CRANKCASE HEATER
CDS	CLOGGED DRAIN SENSOR
CFS	CLOGGED FILTER SWITCH
COMP	COMPRESSOR
CT	CONTROL TRANSFORMER
DAT	DISCHARGE AIR SENSOR
DISC	DISCONNECT SWITCH
FLMS	FLAME SENSOR
FP	FAN PROVING
FS	FREEZE SENSOR
GFCO	GROUND FAULT CONVENIENCE OUTLET
GL	GROUND LUG
GND	GROUND
GV	GAS VALVE
HPC	HIGH PRESSURE CONTROL
IBM	INDOOR BLOWER MOTOR
IDM	INDUCED DRAFT MOTOR
IFC	INTEGRATED FURNACE CONTROL
LAC	LOW AMBIENT CONTROL
LPC	LOW PRESSURE CONTROL
MAS	MIXED AIR SENSOR
MLC	MAIN LIMIT CONTROL
MRLC	MANUAL RESET LIMIT CONTROL
NPC	NEGATIVE PRESSURE SWITCH
OAT	OUTSIDE AIR SENSOR
OFM	OUTDOOR FAN MOTOR
PL	PLUG
PT	POWER TRANSFORMER
RAT	RETURN AIR SENSOR
RC	RUN CAPACITOR
RTU-C	ROOFTOP UNIT CONTROL
SE	SPARK ELECTRODE
US	UNLOADER SOLENOID

WIRE COLOR CODE

BK.....BLACK	G.....GREEN	PR.....PURPLE
BR.....BROWN	G Y .....GRAY	R.....RED
BL.....BLUE	O.....ORANGE	W .....WHITE
		Y.....YELLOW

ELECTRICAL WIRING SCHEMATIC

GE DDC 2 STG 150
208/230/380/460V, 3PH, 60HZ

GE DDC 2 STG 150
380-415V, 3PH, 50HZ

APPROVED:	CHECKED:	ORIGINAL RELEASE NO.:
MODELED BY: JHB	DATE: 03-19-18	R-1071S208
PART NO.: 90-106178-15		REV: 00

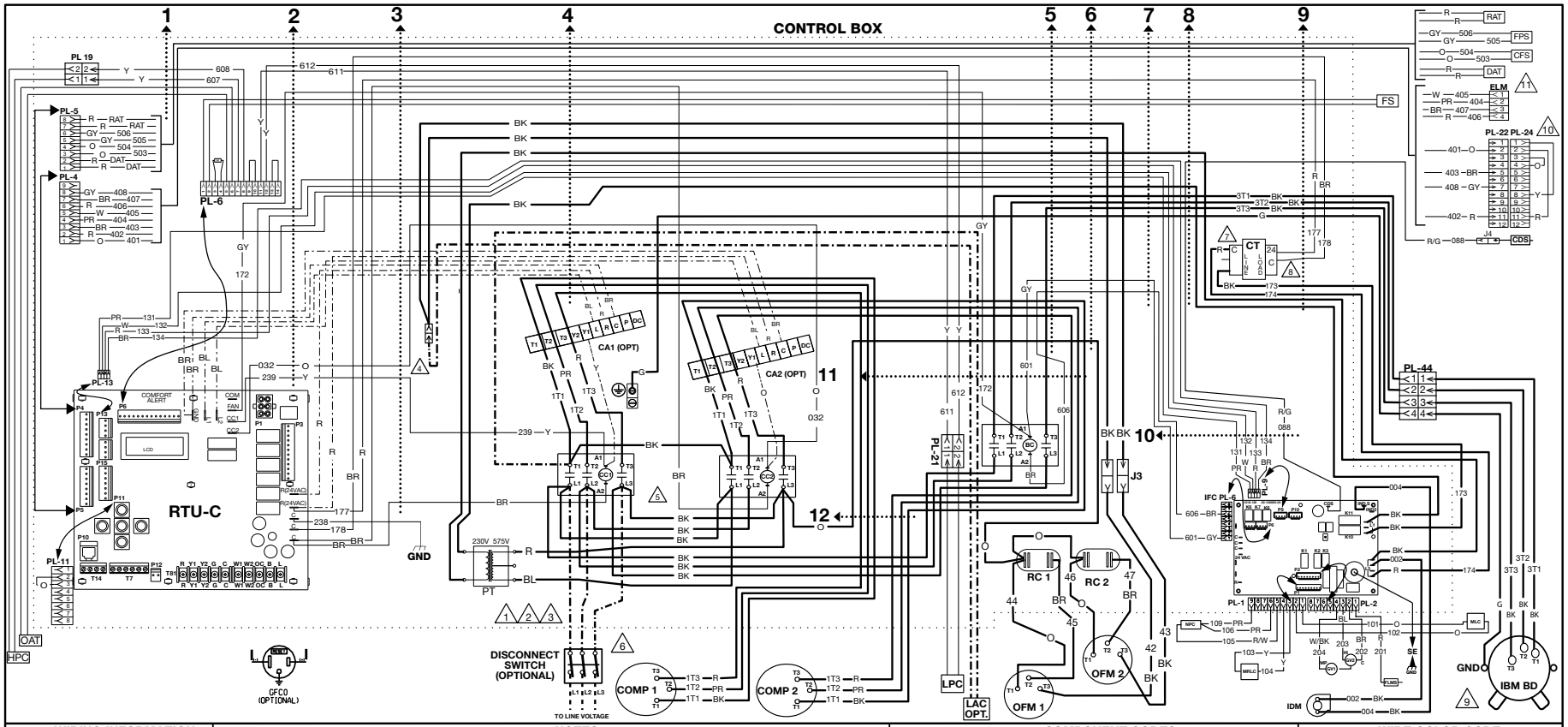

WIRING INFORMATION

LINE VOLTAGE
- -FACTORY STANDARD
- -FACTORY OPTION
- -FIELD INSTALLED

LOW VOLTAGE
- -FACTORY STANDARD
- -FACTORY OPTION
- -FIELD INSTALLED

REPLACEMENT WIRE
-MUST BE THE SAME SIZE AND TYPE OF I NSULATION AS ORIGINAL (105ºC MIN.)

WARNING
-CABINET MUST BE PERMANENTLY GROUNDED AND CONFORM TO I.E.C., N.E.C., C.E.C., NATIONAL WIRING REGULATIONS, AND LOCAL CODES A S APPLICABLE.

NOTES

1. CONNECTORS SUITABLE FOR USE WITH COPPER CONDUCTORS ONLY.
2. CONNECT FIELD WIRING IN GROUNDED RAIN TIGHT CONDUIT TO FUSED DISCONNECT.
3. CONNECT FIELD WIRE TO COMPRESSOR CONTACTOR (CC1).
4. REMOVE J3 AT CC1 (T1) TO INSTALL LOW AMBIENT ACCESSORY.
5. IF REQUIRED, ATTACH CRANKCASE HEATER ACCESSORY TO CC1 (L1) AND CC1 (L2).
6. COMPRESSOR MOTOR THERMALLY PROTECTED. ALL 3 PHASE MODELS ARE PROTECTED UNDER PRIMARY SINGLE PHASE CONDITIONS.
7. TRANSFORMER FACTORY WIRED AS SHOWN BELOW. CHANGE PRIMARY VOLTAGE CONNECTIONS FOR ALTERNATE VOLTAGES, IF REQUIRED.

UNIT VOLTAGES - HZ	TRANSFORMER TERM.
200-220 - 50HZ	200
208 - 60HZ	230
230 - 60HZ	230
380 - 60HZ	400
380-415 - 50HZ	400
460 - 60HZ	460
575 - 60HZ	230

8. LOW VOLTAGE CIRCUIT IS N.E.C. CLASS 2 WITH A CLASS 2 TRANSFORMER, 24VAC, 50/60 HZ SUPPLIED.
9. MOTOR FACTORY WIRED FOR CORRECT VOLTAGE.
10. REMOVE PL24 FOR ECONOMIZER ACCESSORY. PL22 AND PL24 LOCATED IN RETURN AIR SECTION.
11. CONNECT TO ECONOMIZER LOGIC MODULE.

COMPONENT CODES

AR	ACCESSORY RELAY
BC	BLOWER CONTACTOR
CA	COMFORT ALERT MODULE
CC	COMPRESSOR CONTACTOR
CCH	CRANKCASE HEATER
CDS	CLOGGED DRAIN SENSOR
CFS	CLOGGED FILTER SWITCH
COMP	COMPRESSOR
CT	CONTROL TRANSFORMER
DAT	DISCHARGE AIR SENSOR
DISC	DISCONNECT SWITCH
FLMS	FLAME SENSOR
FP	FAN PROVING
FS	FREEZE SENSOR
FT	FREEZE STAT
GFCO	GROUND FAULT CONVENIENCE OUTLET
GL	GROUND LUG
GND	GROUND
HPC	HIGH PRESSURE CONTROL
IBM	INDOOR BLOWER MOTOR
IDM	INDUCED DRAFT MOTOR
IFC	INTEGRATED FURNACE CONTROL
LAC	LOW AMBIENT CONTROL
LLS	LIQUID LINE SENSOR
LPC	LOW PRESSURE CONTROL
MAS	MIXED AIR SENSOR
MRLC	MANUAL RESET LIMIT CONTROL
NPC	NEGATIVE PRESSURE SWITCH
OAT	OUTSIDE AIR SENSOR
OFM	OUTDOOR FAN MOTOR
OFMC	OUTDOOR FAN MOTOR CONTROL
PL	PLUG
PT	POWER TRANSFORMER
RAT	RETURN AIR SENSOR
RC	RUN CAPACITOR
RTU-C	ROOFTOP UNIT CONTROL
SE	SPARK ELECTRODE
TB	TERMINAL BLOCK
VFD	VARIABLE FREQUENCY DRIVE
##	WIRE TIE

WIRE COLOR CODE

BK.....BLACK	G.....GREEN	PR.....PURPLE
BR.....BROWN	GY.....GRAY	R.....RED
BL.....BLUE	O.....ORANGE	W .....WHITE
		Y .....YELLOW

ELECTRICAL WIRING DIAGRAM

GE DDC 2 STG, 575 V, 3PH, 60HZ

APPROVED:	CHECKED:	ORIGINAL RELEASE NO.:
MODELED BY: JHB	DATE: 3/25/18	R-1071S211
PART NO.: 90-106177-16		REV: 00

FIGURE 48

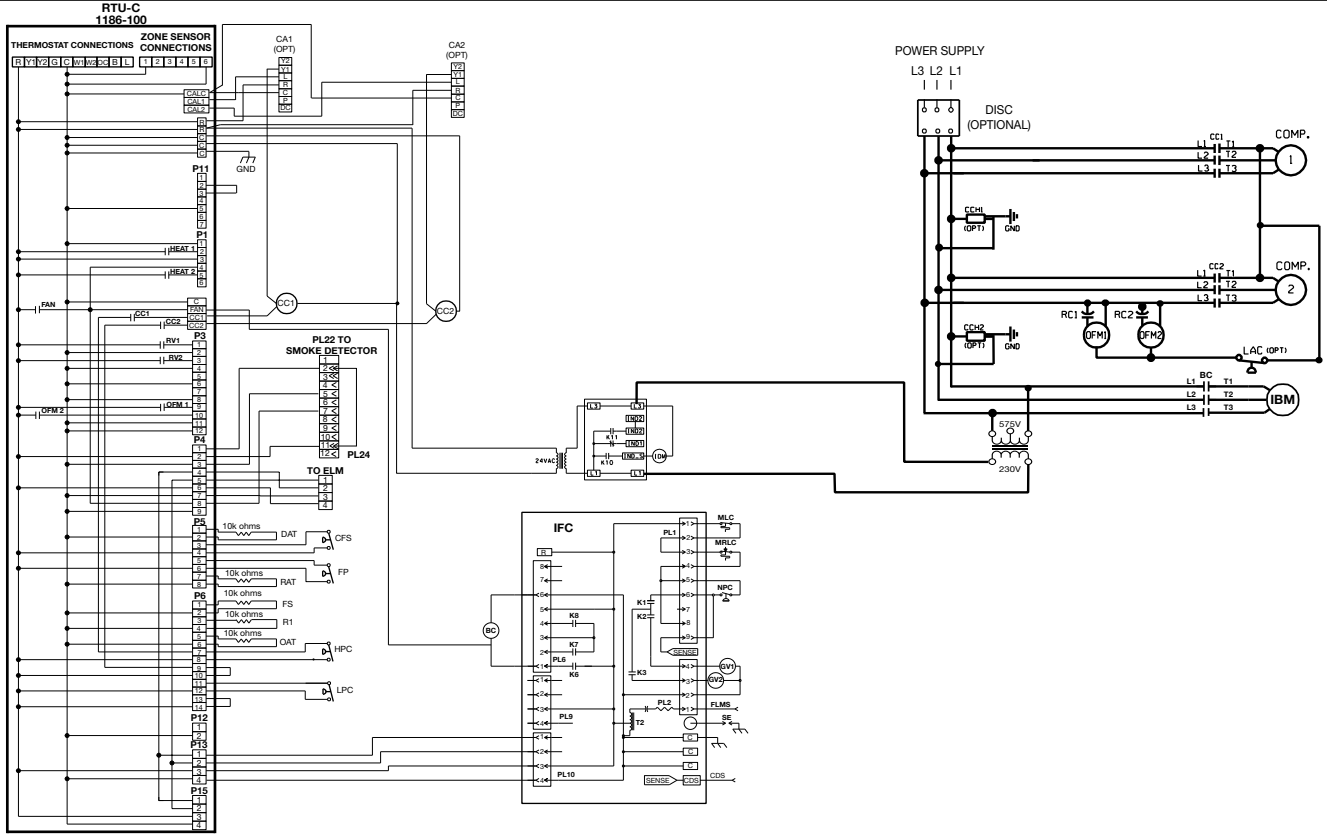

ALARM CODES

CODE	Description	FAULT LEVEL – 0,1,2,3*
0	STANDBY	0
c	COMPRESSOR ON – Low (Flashing if in time delay)	0
C	COMPRESSOR ON – High (Flashing if in time delay)	0
E	Economizer Cooling – No Compressor	0
F	CONTINUOUS FAN	0
h	HEAT ON – Low Stage	0
H	GAS HEAT ON – High Stage	0
4	Comfort Alert Code 4 for Compressor Circuit 1	3
5	Comfort Alert Code 5 for Compressor Circuit 1	3
6	Comfort Alert Code 6 for Compressor Circuit 1	3
7	Comfort Alert Code 7 for Compressor Circuit 1	3
8	Comfort Alert Code 8 for Compressor Circuit 1	3
9	Comfort Alert Code 9 for Compressor Circuit 1	3
11	FAILED IGNITION	2
12	LO FLAME SENSE	1
13	FLAME LOST	2
14	UNEXPECTED FLAME	3
15	2nd Stage Gas valve improper voltage	2
20	REFRIGERANT LOW PRESSURE SWITCH OPEN – CIRCUIT 1	2
21	REFRIGERANT LOW PRESSURE SWITCH OPEN – CIRCUIT 2	2
22	MAIN LIMIT OPEN	2
29	REFRIGERANT HIGH PRESSURE SWITCH OPEN – CIRCUIT 1	2
30	REFRIGERANT HIGH PRESSURE SWITCH OPEN – CIRCUIT 2	2
33	MRLC (Rollout Limit) OPEN	2
34	Comfort Alert Code 4 for Compressor Circuit 2	3
35	Comfort Alert Code 5 for Compressor Circuit 2	3
36	Comfort Alert Code 6 for Compressor Circuit 2	3
37	Comfort Alert Code 7 for Compressor Circuit 2	3
38	Comfort Alert Code 8 for Compressor Circuit 2	3
39	Comfort Alert Code 9 for Compressor Circuit 2	3
42	Invalid Thermostat Selection	1
44	1st Stage COMBUSTION PRESS SWITCH CLOSED	2
46	1st Stage COMBUSTION PRESS SWITCH OPEN	2
49	FREEZE SWITCH OPEN – CIRCUIT 1	2
50	FREEZE SWITCH OPEN -CIRCUIT 2	2
55	2nd Stage COMBUSTION PRESS SWITCH CLOSED	2
57	2nd Stage COMBUSTION PRESS SWITCH OPEN	2,3
59	Condensate Drain Plugged	3
61	Blower Fault – NO RUN	3
83	Condenser Coil Temp Sensor Fail-OCT	2
84	Outdoor Air Temperature Sensor Fail-OAT	2
88	Emergency Stop Fault	3
93	CONTROL Fault	3
97	Smoke Detection	3

*Fault levels:0 = none, 1=warning, 2= problem, 3=shutdown

WIRING INFORMATION

LINE VOLTAGE
- -FACTORY STANDARD
- -FACTORY OPTION
- -FIELD INSTALLED

LOW VOLTAGE
- -FACTORY STANDARD
- -FACTORY OPTION
- -FIELD INSTALLED

REPLACEMENT WIRE
-MUST BE THE SAME SIZE AND TYPE OF INSULATION AS ORIGINAL (105ºC MIN.)

WARNING
-CABINET MUST BE PERMANENTLY GROUNDED AND CONFORM TO I.E.C., N.E.C., C.E.C., NATIONAL WIRING REGULATIONS, AND LOCAL CODES AS APPLICABLE.

NOTES

1. CONNECTORS SUITABLE FOR USE WITH COPPER CONDUCTORS ONLY.
2. CONNECT FIELD WIRING IN GROUNDED RAIN TIGHT CONDUIT TO FUSED DISCONNECT.
3. CONNECT FIELD WIRE TO COMPRESSOR CONTACTOR (CC1).
4. REMOVE J3 AT (CC1) TO INSTALL LOW AMBIENT ACCESSORY.
5. IF REQUIRED, ATTACH CRANKCASE HEATER ACCESSORY TO CC1 (L1) AND CC1 (L2).
6. COMPRESSOR MOTOR THERMALLY PROTECTED. ALL 3 PHASE MODELS ARE PROTECTED UNDER PRIMARY SINGLE PHASE CONDITIONS.
7. TRANSFORMER FACTORY WIRED AS SHOWN BELOW. CHANGE PRIMARY VOLTAGE CONNECTIONS FOR ALTERNATE VOLTAGES, IF REQUIRED.

UNIT VOLTAGES - HZ	TRANSFORMER TERM.
200-220 - 50HZ	200
208 - 60HZ	230
230 - 60HZ	230
380 - 60HZ	400
380-415 - 50HZ	400
460 - 60HZ	460
575 - 60HZ	575

8. LOW VOLTAGE CIRCUIT IS N.E.C. CLASS 2 WITH A CLASS 2 TRANSFORMER, 24VAC, 50/60 HZ SUPPLIED.
9. MOTOR FACTORY WIRED FOR CORRECT VOLTAGE.
10. REMOVE PL24 FOR ECONOMIZER ACCESSORY. PL22 AND PL24 LOCATED IN RETURN AIR SECTION.

COMPONENT CODES

BC	BLOWER CONTACTOR
CA	COMFORT ALERT MODULE
CC	COMPRESSOR CONTACTOR
CCH	CRANKCASE HEATER
CDS	CLOGGED DRAIN SENSOR
CFS	CLOGGED FILTER SWITCH
COMP	COMPRESSOR
CT	CONTROL TRANSFORMER
DAT	DISCHARGE AIR SENSOR
DISC	DISCONNECT SWITCH
FLMS	FLAME SENSOR
FP	FAN PROVING
FS	FREEZE SENSOR
GFCO	GROUND FAULT CONVENIENCE OUTLET
GL	GROUND LUG
GND	GROUND
GV	GAS VALVE
HPC	HIGH PRESSURE CONTROL
IBM	INDOOR BLOWER MOTOR
IDM	INDUCED DRAFT MOTOR
IFC	INTEGRATED FURNACE CONTROL
LAC	LOW AMBIENT CONTROL
LPC	LOW PRESSURE CONTROL
MAS	MIXED AIR SENSOR
MLC	MAIN LIMIT CONTROL
MRLC	MANUAL RESET LIMIT CONTROL
NPC	NEGATIVE PRESSURE SWITCH
OAT	OUTSIDE AIR SENSOR
OFM	OUTDOOR FAN MOTOR
PL	PLUG
PT	POWER TRANSFORMER
RAT	RETURN AIR SENSOR
RC	RUN CAPACITOR
RTU-C	ROOFTOP UNIT CONTROL
SE	SPARK ELECTRODE
US	UNLOADER SOLENOID

WIRE COLOR CODE

BK.....BLACK	G.....GREEN	PR.....PURPLE
BR.....BROWN	G Y .....GRAY	R.....RED
BL.....BLUE	O.....ORANGE	W .....WHITE
		Y.....YELLOW

ELECTRICAL WIRING SCHEMATIC

GE DDC 2 STG 150
575V 3PH, 60HZ

APPROVED:	CHECKED:	ORIGINAL RELEASE NO.:
MODELED BY: JHB	DATE: 03-19-18	R-1071S208
PART NO.: 90-106178-16		REV: 00

FIGURE 49

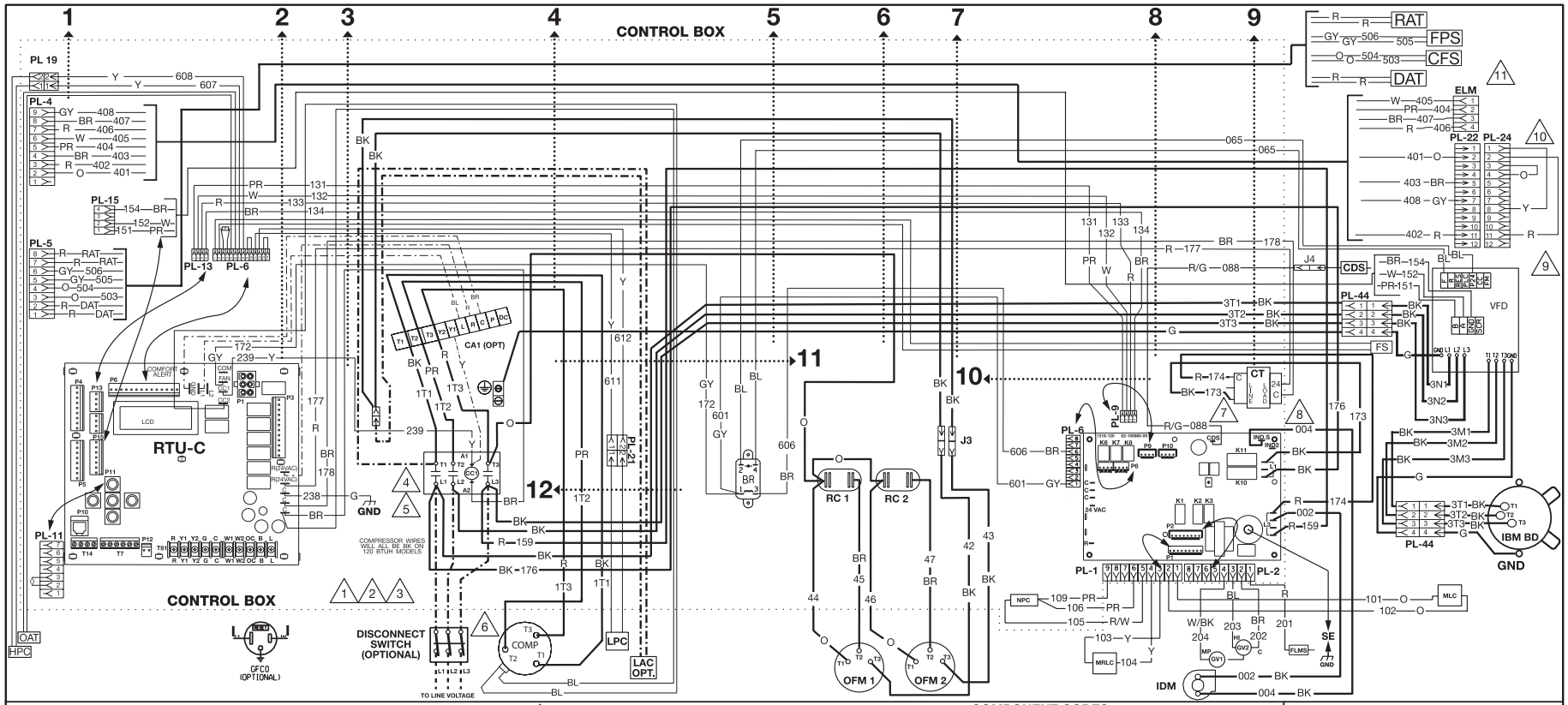

WIRING INFORMATION

LINE VOLTAGE
-FACTORY STANDARD
-FACTORY OPTION
-FIELD INSTALLED

LOW VOLTAGE
-FACTORY STANDARD
-FACTORY OPTION
-FIELD INSTALLED

REPLACEMENT WIRE
-MUST BE THE SAME SIZE AND TYPE OF INSULATION AS ORIGINAL (105°C.MIN.)

WARNING
-CABINET MUST BE PERMANENTLY GROUNDED AND CONFORM TO I.E.C., N.E.C., C.E.C., NATIONAL WIRING REGULATIONS, AND LOCAL CODES AS APPLICABLE.

△ NOTES

1. CONNECTORS SUITABLE FOR USE WITH COPPER CONDUCTORS ONLY.
2. CONNECT FIELD WIRING IN GROUNDED RAIN TIGHT CONDUIT TO FUSED DISCONNECT.
3. CONNECT FIELD WIRE TO COMPRESSOR CONTACTOR (CC1).
4. REMOVE J3 AT (CC1) TO INSTALL LOW AMBIENT ACCESSORY.
5. IF REQUIRED, ATTACH CRANKCASE HEATER ACCESSORY TO CC1 (L1) AND CC1 (L2).
6. COMPRESSOR MOTOR THERMALLY PROTECTED. ALL 3 PHASE MODELS ARE PROTECTED UNDER PRIMARY SINGLE PHASE CONDITIONS.
7. TRANSFORMER FACTORY WIRED AS SHOWN BELOW. CHANGE PRIMARY VOLTAGE CONNECTION FOR ALTERNATE VOLTAGES, IF REQUIRED.

UNIT VOLTAGES –HZ	TRANSFORMER TERM.
200-220 –50 HZ	200
208 –60 HZ	230
230 –60 HZ	230
380 –60 HZ	400
380-415 -50 HZ	400
460 –60 HZ	460
575 -60 HZ	230

8. LOW VOLTAGE CIRCUIT IS N.E.C. CLASS 2 WITH A CLASS 2 TRANSFORMER, 24VAC 50/60 HZ SUPPLIED.
9. MOTOR FACTORY WIRED FOR CORRECT VOLTAGE.
10. REMOVE PL24 FOR ECONOMIZER ACCESSORY. PL22 AND PL24 LOCATED IN RETURN AIR SECTION.
11. CONNECT TO ECONOMIZER LOGIC MODULE.

COMPONENT CODES

BC	BLOWER CONTACTOR
CA	COMFORT ALERT MODULE
CC	COMPRESSOR CONTACTOR
CCH	CRANKCASE HEATER
CDS	CLOG DRAIN SENSOR
CFS	CLOGGED FILTER SWITCH
COMP	COMPRESSOR
CT	CONTROL TRANSFORMER
DAT	DISCHARGE AIR SENSOR
DISC	DISCONNECT SWITCH
ELM	ECONOMIZER LOGIC MODULE
FLMS	FLAME SENSOR
FP	FAN PROVING SWITCH
FS	FREEZE SENSOR
FT	FREEZE STAT
GFCO	GROUND FAULT CONVENIENCE OUTLET
GL	GROUND LUG
GND	GROUND
GV	GAS VALVE
HPC	HIGH PRESSURE CONTROL
IBM	INDOOR BLOWER MOTOR
IDM	INDUCED DRAFT MOTOR
IFC	INTEGRATED FURNACE CONTROL
J	JUMPER
LAC	LOW AMBIENT CONTROL
LPC	LOW PRESSURE CONTROL
MLC	MAIN LIMIT CONTROL
MRLC	MANUAL RESET LIMIT CONTROL
NPC	NEGATIVE PRESSURE SWITCH
OAT	OUTSIDE AIR SENSOR
OFM	OUTDOOR FAN MOTOR
PL	PLUG
PT	POWER TRANSFORMER
RAT	RETURN AIR SENSOR
RC	RUN CAPACITOR
RTU-C	ROOFTOP UNIT CONTROL
SE	SPARK ELECTRODE
US	UNLOADER SOLENOID
VFD	VARIABLE FREQUENCY DRIVE
##	WIRE TIES

WIRE COLOR CODE

BK.....BLACK	G.....GREEN	PR.....PURPLE
BR.....BROWN	GY.....GRAY	R.....RED
BL.....BLUE	O.....ORANGE	W.....WHITE
		Y.....YELLOW

ELECTRICAL WIRING DIAGRAM

GE DDC 2-STG VFD 090/102/120
208/230/380/460V, 3PH, 60HZ

GE DDC 2-STG VFD 072/090/102
380-415V, 3PH, 50HZ

APPROVED:	CHECKED:	ORIGINAL RELEASE NO.:
MODELED BY: TCJW	DATE: 12-04-17	R-1071S126
PART NO.: 90-106177-17		REV: 00

FIGURE 50

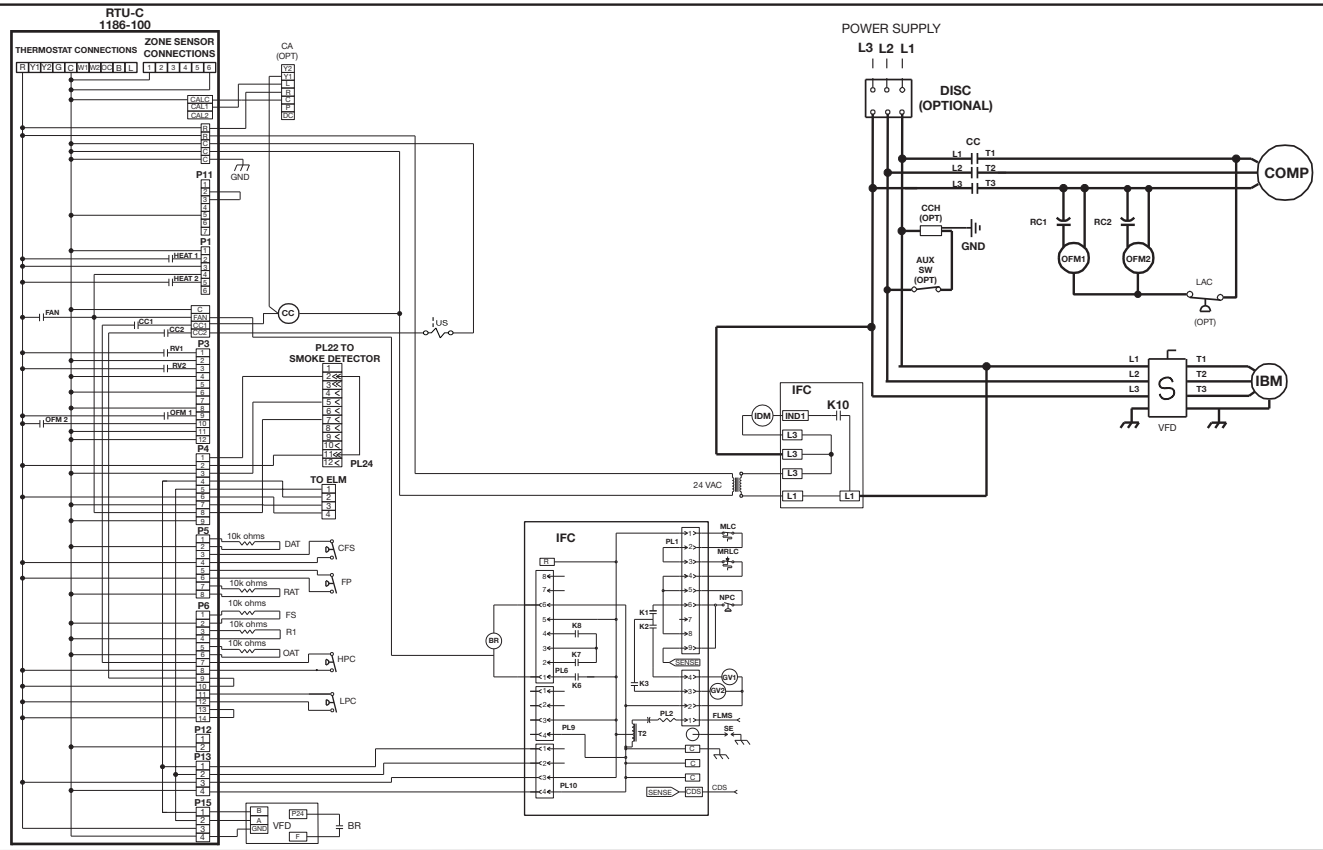

ALARM CODES

CODE	Description	FAULT LEVEL – 0,1,2,3*
0	STANDBY	0
c	COMPRESSOR ON – Low (Flashing if in time delay)	0
C	COMPRESSOR ON – High (Flashing if in time delay)	0
E	Economizer Cooling – No Compressor	0
F	CONTINUOUS FAN	0
h	HEAT ON – Low Stage	0
H	GAS HEAT ON – High Stage	0
4	Comfort Alert Code 4 for Compressor Circuit 1	3
5	Comfort Alert Code 5 for Compressor Circuit 1	3
6	Comfort Alert Code 6 for Compressor Circuit 1	3
7	Comfort Alert Code 7 for Compressor Circuit 1	3
8	Comfort Alert Code 8 for Compressor Circuit 1	3
9	Comfort Alert Code 9 for Compressor Circuit 1	3
11	FAILED IGNITION	2
12	LO FLAME SENSE	1
13	FLAME LOST	2
14	UNEXPECTED FLAME	3
15	2nd Stage Gas valve improper voltage	2
20	REFRIGERANT LOW PRESSURE SWITCH OPEN – CIRCUIT 1	2
21	REFRIGERANT LOW PRESSURE SWITCH OPEN – CIRCUIT 2	2
22	MAIN LIMIT OPEN	2
29	REFRIGERANT HIGH PRESSURE SWITCH OPEN – CIRCUIT 1	2
30	REFRIGERANT HIGH PRESSURE SWITCH OPEN – CIRCUIT 2	2
33	MRLC (Rollout Limit) OPEN	2
34	Comfort Alert Code 4 for Compressor Circuit 2	3
35	Comfort Alert Code 5 for Compressor Circuit 2	3
36	Comfort Alert Code 6 for Compressor Circuit 2	3
37	Comfort Alert Code 7 for Compressor Circuit 2	3
38	Comfort Alert Code 8 for Compressor Circuit 2	3
39	Comfort Alert Code 9 for Compressor Circuit 2	3
42	Invalid Thermostat Selection	1
44	1st Stage COMBUSTION PRESS SWITCH CLOSED	2
46	1st Stage COMBUSTION PRESS SWITCH OPEN	2
49	FREEZE SWITCH OPEN – CIRCUIT 1	2
50	FREEZE SWITCH OPEN -CIRCUIT 2	2
55	2nd Stage COMBUSTION PRESS SWITCH CLOSED	2
57	2nd Stage COMBUSTION PRESS SWITCH OPEN	2,3
59	Condensate Drain Plugged	3
61	Blower Fault – NO RUN	3
83	Condenser Coil Temp Sensor Fail-OCT	2
84	Outdoor Air Temperature Sensor Fail-OAT	2
88	Emergency Stop Fault	3
93	CONTROL Fault	3
97	Smoke Detection	3

*Fault levels:0 = none, 1=warning, 2= problem, 3=shutdown

WIRING INFORMATION

LINE VOLTAGE
-FACTORY STANDARD
-FACTORY OPTION
-FIELD INSTALLED

LOW VOLTAGE
-FACTORY STANDARD
-FACTORY OPTION
-FIELD INSTALLED

REPLACEMENT WIRE
-MUST BE THE SAME SIZE AND TYPE OF INSULATION AS ORIGINAL (105ºC MIN.)

WARNING
-CABINET MUST BE PERMANENTLY GROUNDED AND CONFORM TO I.E.C., N.E.C., C.E.C., NATIONAL WIRING REGULATIONS, AND LOCAL CODES AS APPLICABLE.

NOTES

1. CONNECTORS SUITABLE FOR USE WITH COPPER CONDUCTORS ONLY.
2. CONNECT FIELD WIRING IN GROUNDED RAIN TIGHT CONDUIT TO FUSED DISCONNECT.
3. CONNECT FIELD WIRE TO COMPRESSOR CONTACTOR (CC1).
4. REMOVE J3 AT (CC1) TO INSTALL LOW AMBIENT ACCESSORY.
5. IF REQUIRED, ATTACH CRANKCASE HEATER ACCESSORY TO CC1 (L1) AND CC1 (L2).
6. COMPRESSOR MOTOR THERMALLY PROTECTED. ALL 3 PHASE MODELS ARE PROTECTED UNDER PRIMARY SINGLE PHASE CONDITIONS.
7. TRANSFORMER FACTORY WIRED AS SHOWN BELOW. CHANGE PRIMARY VOLTAGE CONNECTIONS FOR ALTERNATE VOLTAGES, IF REQUIRED.

UNIT VOLTAGES - HZ	TRANSFORMER TERM.
200-220 - 50HZ	200
208 - 60HZ	230
230 - 60HZ	230
380 - 60HZ	400
380-415 - 50HZ	400
460 - 60HZ	460
575 - 60HZ	230

8. LOW VOLTAGE CIRCUIT IS N.E.C. CLASS 2 WITH A CLASS 2 TRANSFORMER, 24VAC, 50/60 HZ SUPPLIED.
9. MOTOR FACTORY WIRED FOR CORRECT VOLTAGE.
10. REMOVE PL24 FOR ECONOMIZER ACCESSORY. PL22 AND PL24 LOCATED IN RETURN AIR SECTION.

COMPONENT CODES

BR	BLOWER RELAY
CA	COMFORT ALERT MODULE
CC	COMPRESSOR CONTACTOR
CCH	CRANKCASE HEATER
CDS	CLOGGED DRAIN SENSOR
CFS	CLOGGED FILTER SWITCH
COMP	COMPRESSOR
CT	CONTROL TRANSFORMER
DAT	DISCHARGE AIR SENSOR
DISC	DISCONNECT SWITCH
FLMS	FLAME SENSOR
FP	FAN PROVING
FS	FREEZE SENSOR
GFCO	GROUND FAULT CONVENIENCE OUTLET
GL	GROUND LUG
GND	GROUND
GV	GAS VALVE
HPC	HIGH PRESSURE CONTROL
IBM	INDOOR BLOWER MOTOR
IDM	INDUCED DRAFT MOTOR
IFC	INTEGRATED FURNACE CONTROL
LAC	LOW AMBIENT CONTROL
LPC	LOW PRESSURE CONTROL
MAS	MIXED AIR SENSOR
MLC	MAIN LIMIT CONTROL
MRLC	MANUAL RESET LIMIT CONTROL
NPC	NEGATIVE PRESSURE SWITCH
OAT	OUTSIDE AIR SENSOR
OFM	OUTDOOR FAN MOTOR
PL	PLUG
PT	POWER TRANSFORMER
RAT	RETURN AIR SENSOR
RC	RUN CAPACITOR
RTU-C	ROOFTOP UNIT CONTROL
SE	SPARK ELECTRODE
US	UNLOADER SOLENOID
VFD	VARIABLE FREQUENCY DRIVE

WIRE COLOR CODE

BK.....BLACK	G.....GREEN	PR.....PURPLE
BR.....BROWN	GY.....GRAY	R.....RED
BL.....BLUE	O.....ORANGE	W .....WHITE
		Y.....YELLOW

ELECTRICAL WIRING SCHEMATIC

GE DDC 2 STG VFD 090/102/120
208/230/380/460V, 3PH, 60HZ

GE DDC 2 STG 072/090/102
380-415V, 3PH, 50HZ

APPROVED:	CHECKED:	ORIGINAL RELEASE NO.:
MODELED BY: TEW	DATE: 12-06-17	R-1071S126
PART NO.: 90-106178-17		REV: 01

FIGURE 51

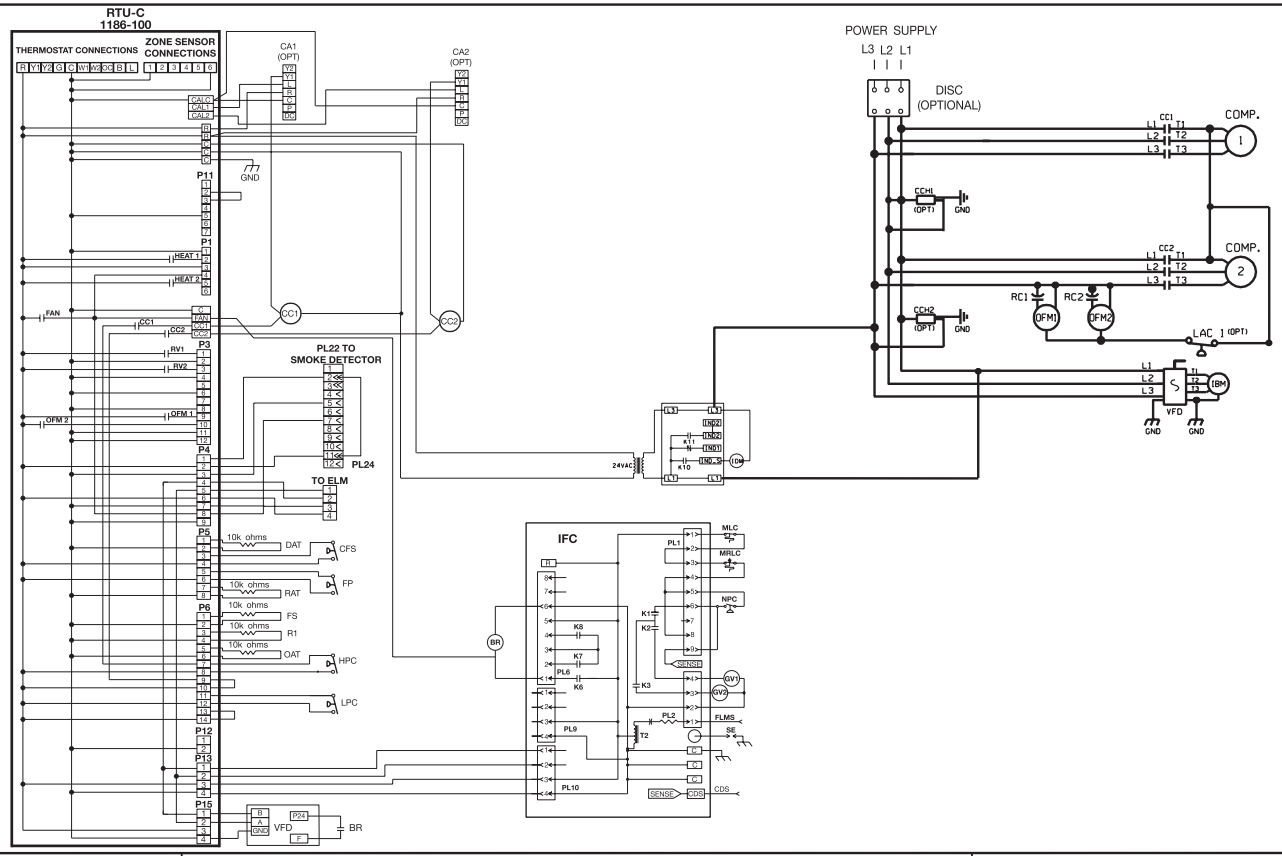

ALARM CODES

CODE	Description	FAULT LEVEL –0,1,2,3*
0	STANDBY	0
c	COMPRESSOR ON – Low (Flashing if in time delay)	0
C	COMPRESSOR ON – High (Flashing if in time delay)	0
E	Economizer Cooling – No Compressor	0
F	CONTINUOUS FAN	0
h	HEAT ON – Low Stage	0
H	GAS HEAT ON – High Stage	0
4	Comfort Alert Code 4 for Compressor Circuit 1	3
5	Comfort Alert Code 5 for Compressor Circuit 1	3
6	Comfort Alert Code 6 for Compressor Circuit 1	3
7	Comfort Alert Code 7 for Compressor Circuit 1	3
8	Comfort Alert Code 8 for Compressor Circuit 1	3
9	Comfort Alert Code 9 for Compressor Circuit 1	3
11	FAILED IGNITION	2
12	LO FLAME SENSE	1
13	FLAME LOST	2
14	UNEXPECTED FLAME	3
15	2nd Stage Gas valve improper voltage	2
20	REFRIGERANT LOW PRESSURE SWITCH OPEN – CIRCUIT 1	2
21	REFRIGERANT LOW PRESSURE SWITCH OPEN – CIRCUIT 2	2
22	MAIN LIMIT OPEN	2
29	REFRIGERANT HIGH PRESSURE SWITCH OPEN – CIRCUIT 1	2
30	REFRIGERANT HIGH PRESSURE SWITCH OPEN – CIRCUIT 2	2
33	MRLC (Rollout Limit) OPEN	2
34	Comfort Alert Code 4 for Compressor Circuit 2	3
35	Comfort Alert Code 5 for Compressor Circuit 2	3
36	Comfort Alert Code 6 for Compressor Circuit 2	3
37	Comfort Alert Code 7 for Compressor Circuit 2	3
38	Comfort Alert Code 8 for Compressor Circuit 2	3
39	Comfort Alert Code 9 for Compressor Circuit 2	3
42	Invalid Thermostat Selection	1
44	1st Stage COMBUSTION PRESS SWITCH CLOSED	2
46	1st Stage COMBUSTION PRESS SWITCH OPEN	2
49	FREEZE SWITCH OPEN – CIRCUIT 1	2
50	FREEZE SWITCH OPEN -CIRCUIT 2	2
55	2nd Stage COMBUSTION PRESS SWITCH CLOSED	2
57	2nd Stage COMBUSTION PRESS SWITCH OPEN	2,3
59	Condensate Drain Plugged	3
61	Blower Fault – NO RUN	3
83	Condenser Coil Temp Sensor Fail-OCT	2
84	Outdoor Air Temperature Sensor Fail-OAT	2
88	Emergency Stop Fault	3
93	CONTROL Fault	3
97	Smoke Detection	3

*Fault levels:0 = none, 1=warning, 2= problem, 3=shutdown

WIRING INFORMATION

LINE VOLTAGE
- -FACTORY STANDARD
- -FACTORY OPTION
- -FIELD INSTALLED

LOW VOLTAGE
- -FACTORY STANDARD
- -FACTORY OPTION
- -FIELD INSTALLED

REPLACEMENT WIRE
-MUST BE THE SAME SIZE AND TYPE OF INSULATION AS ORIGINAL (105°C MIN.)

WARNING
-CABINET MUST BE PERMANENTLY GROUNDED AND CONFORM TO I.E.C., N.E.C., C.E.C., NATIONAL WIRING REGULATIONS, AND LOCAL CODES AS APPLICABLE.

NOTES

1. CONNECTORS SUITABLE FOR USE WITH COPPER CONDUCTORS ONLY.
2. CONNECT FIELD WIRING IN GROUNDED RAIN TIGHT CONDUIT TO FUSED DISCONNECT.
3. CONNECT FIELD WIRE TO COMPRESSOR CONTACTOR (CC1).
4. REMOVE J3 AT (CC1) TO INSTALL LOW AMBIENT ACCESSORY.
5. IF REQUIRED, ATTACH CRANKCASE HEATER ACCESSORY TO CC1 (L1) AND CC1 (L2).
6. COMPRESSOR MOTOR THERMALLY PROTECTED. ALL 3 PHASE MODELS ARE PROTECTED UNDER PRIMARY SINGLE PHASE CONDITIONS.
7. TRANSFORMER FACTORY WIRED AS SHOWN BELOW. CHANGE PRIMARY VOLTAGE CONNECTIONS FOR ALTERNATE VOLTAGES, IF REQUIRED.

UNIT VOLTAGES - HZ	TRANSFORMER TERM.
200-220 - 50HZ	200
208 - 60HZ	230
230 - 60HZ	230
380 - 60HZ	400
380-415 - 50HZ	400
460 - 60HZ	460
575 - 60HZ	230

8. LOW VOLTAGE CIRCUIT IS N.E.C. CLASS 2 WITH A CLASS 2 TRANSFORMER, 24VAC, 50/60 HZ SUPPLIED.
9. MOTOR FACTORY WIRED FOR CORRECT VOLTAGE.
10. REMOVE PL24 FOR ECONOMIZER ACCESSORY. PL22 AND PL24 LOCATED IN RETURN AIR SECTION.

COMPONENT CODES

BR	BLOWER RELAY
CA	COMFORT ALERT MODULE
CC	COMPRESSOR CONTACTOR
CCH	CRANKCASE HEATER
CDS	CLOGGED DRAIN SENSOR
CFS	CLOGGED FILTER SWITCH
COMP	COMPRESSOR
CT	CONTROL TRANSFORMER
DAT	DISCHARGE AIR SENSOR
DISC	DISCONNECT SWITCH
FLMS	FLAME SENSOR
FP	FAN PROVING
FS	FREEZE SENSOR
GFCO	GROUND FAULT CONVENIENCE OUTLET
GL	GROUND LUG
GND	GROUND
GV	GAS VALVE
HPC	HIGH PRESSURE CONTROL
IBM	INDOOR BLOWER MOTOR
IDM	INDUCED DRAFT MOTOR
IFC	INTEGRATED FURNACE CONTROL
LAC	LOW AMBIENT CONTROL
LPC	LOW PRESSURE CONTROL
MAS	MIXED AIR SENSOR
MLC	MAIN LIMIT CONTROL
MRLC	MANUAL RESET LIMIT CONTROL
NPC	NEGATIVE PRESSURE SWITCH
OAT	OUTSIDE AIR SENSOR
OFM	OUTDOOR FAN MOTOR
PL	PLUG
PT	POWER TRANSFORMER
RAT	RETURN AIR SENSOR
RC	RUN CAPACITOR
RTU-C	ROOFTOP UNIT CONTROL
SE	SPARK ELECTRODE
US	UNLOADER SOLENOID
VFD	VARIABLE FREQUENCY DRIVE

WIRE COLOR CODE

BK.....BLACK	G.....GREEN	PR.....PURPLE
BR.....BROWN	GY.....GRAY	R.....RED
BL.....BLUE	O.....ORANGE	W .....WHITE
		Y.....YELLOW

ELECTRICAL WIRING SCHEMATIC

GE DDC 2 STG VFD 150
208/230/380/460V, 3PH, 60HZ

GE DDC 2 STG 120
380-415V, 3PH, 50HZ

APPROVED:	CHECKED:	ORIGINAL RELEASE NO.:
MODELED BY: JHB	DATE: 3-19-18	R-1071S208
PART NO.: 90-106178-19		REV: 00

FIGURE 52

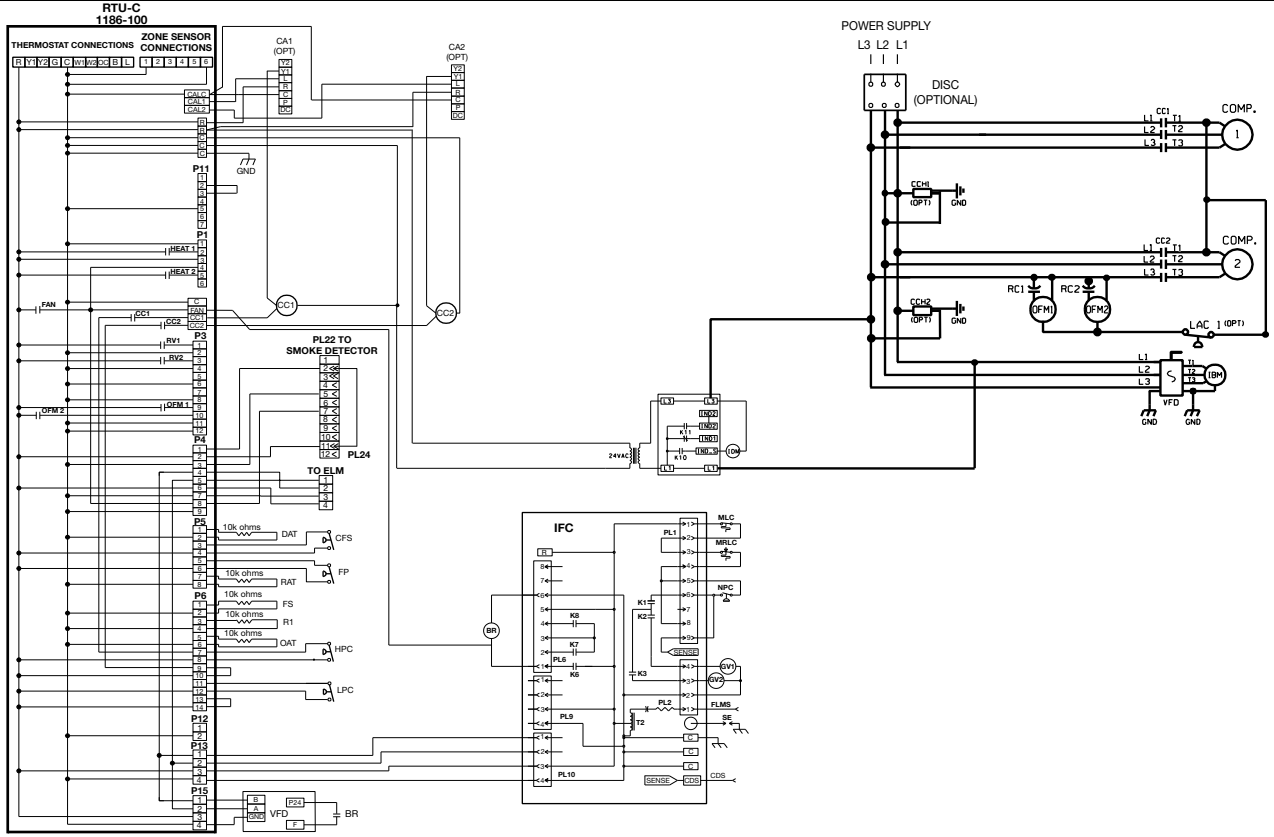

ALARM CODES

CODE	Description	FAULT LEVEL – 0,1,2,3*
0	STANDBY	0
c	COMPRESSOR ON – Low (Flashing if in time delay)	0
C	COMPRESSOR ON – High (Flashing if in time delay)	0
E	Economizer Cooling – No Compressor	0
F	CONTINUOUS FAN	0
h	HEAT ON – Low Stage	0
H	GAS HEAT ON – High Stage	0
4	Comfort Alert Code 4 for Compressor Circuit 1	3
5	Comfort Alert Code 5 for Compressor Circuit 1	3
6	Comfort Alert Code 6 for Compressor Circuit 1	3
7	Comfort Alert Code 7 for Compressor Circuit 1	3
8	Comfort Alert Code 8 for Compressor Circuit 1	3
9	Comfort Alert Code 9 for Compressor Circuit 1	3
11	FAILED IGNITION	2
12	LO FLAME SENSE	1
13	FLAME LOST	2
14	UNEXPECTED FLAME	3
15	2nd Stage Gas valve improper voltage	2
20	REFRIGERANT LOW PRESSURE SWITCH OPEN – CIRCUIT 1	2
21	REFRIGERANT LOW PRESSURE SWITCH OPEN – CIRCUIT 2	2
22	MAIN LIMIT OPEN	2
29	REFRIGERANT HIGH PRESSURE SWITCH OPEN – CIRCUIT 1	2
30	REFRIGERANT HIGH PRESSURE SWITCH OPEN – CIRCUIT 2	2
33	MRLC (Rollout Limit) OPEN	2
34	Comfort Alert Code 4 for Compressor Circuit 2	3
35	Comfort Alert Code 5 for Compressor Circuit 2	3
36	Comfort Alert Code 6 for Compressor Circuit 2	3
37	Comfort Alert Code 7 for Compressor Circuit 2	3
38	Comfort Alert Code 8 for Compressor Circuit 2	3
39	Comfort Alert Code 9 for Compressor Circuit 2	3
42	Invalid Thermostat Selection	1
44	1st Stage COMBUSTION PRESS SWITCH CLOSED	2
46	1st Stage COMBUSTION PRESS SWITCH OPEN	2
49	FREEZE SWITCH OPEN – CIRCUIT 1	2
50	FREEZE SWITCH OPEN -CIRCUIT 2	2
55	2nd Stage COMBUSTION PRESS SWITCH CLOSED	2
57	2nd Stage COMBUSTION PRESS SWITCH OPEN	2,3
59	Condensate Drain Plugged	3
61	Blower Fault – NO RUN	3
83	Condenser Coil Temp Sensor Fail-OCT	2
84	Outdoor Air Temperature Sensor Fail-OAT	2
88	Emergency Stop Fault	3
93	CONTROL Fault	3
97	Smoke Detection	3

*Fault levels:0 = none, 1=warning, 2= problem, 3=shutdown

WIRING INFORMATION

LINE VOLTAGE
- -FACTORY STANDARD
- -FACTORY OPTION
- -FIELD INST ALLED

LOW VOLTAGE
- -FACTORY STANDARD
- -FACTORY OPTION
- -FIELD INST ALLED

REPLACEMENT WIRE
-MUST BE THE SAME SIZE AND TYPE OF INSULATION AS ORIG INAL (105ºC MIN.)

WARNING
-CABINET MUST BE PERMANE NTLY GROUNDED AND CONFORM TO I.E.C., N.E.C., C.E.C., NATIONAL WIRING REGULATIONS, AND LOCAL CODES AS APPLICABLE.

NOTES

1. CONNECTORS SUITABLE FOR USE WITH COPPER CONDUCTORS ONLY.
2. CONNECT FIELD WIRING IN GROUNDED RAIN TIGHT CONDUIT TO FUSED DISCONNECT.
3. CONNECT FIELD WIRE TO COMPRESSOR CONTACTOR (CC1).
4. REMOVE J3 AT (CC1) TO INSTALL LOW AMBIENT ACCESSORY.
5. IF REQUIRED, ATTACH CRANKCASE HEATER ACCESSORY TO CC1 (L1) AND CC1 (L2).
6. COMPRESSOR MOTOR THERMALLY PROTECTED. ALL 3 PHASE MODELS ARE PROTECTED UNDER PRIMARY SINGLE PHASE CONDITIONS.
7. TRANSFORMER FACTORY WIRED AS SHOWN BELOW. CHANGE PRIMARY VOLTAGE CONNECTIONS FOR ALTERNATE VOLTAGES, IF REQUIRED.

UNIT VOLTAGES - HZ	TRANSFORMER TERM.
200-220 - 50HZ	200
208 - 60HZ	230
230 - 60HZ	230
380 - 60HZ	400
380-415 - 50HZ	400
460 - 60HZ	460
575 - 60HZ	230

8. LOW VOLTAGE CIRCUIT IS N.E.C. CLASS 2 WITH A CLASS 2 TRANSFORMER, 24VAC, 50/60 HZ SUPPLIED.
9. MOTOR FACTORY WIRED FOR CORRECT VOLTAGE.
10. REMOVE PL24 FOR ECONOMIZER ACCESSORY. PL22 AND PL24 LOCATED IN RETURN AIR SECTION.

COMPONENT CODES

BR	BLOWER RELAY
CA	COMFORT ALERT MODULE
CC	COMPRESSOR CONTACTOR
CCH	CRANKCASE HEATER
CDS	CLOGGED DRAIN SENSOR
CFS	CLOGGED FILTER SWITCH
COMP	COMPRESSOR
CT	CONTROL TRANSFORMER
DAT	DISCHARGE AIR SENSOR
DISC	DISCONNECT SWITCH
FLMS	FLAME SENSOR
FP	FAN PROVING
FS	FREEZE SENSOR
GFCO	GROUND FAULT CONVENIENCE OUTLET
GL	GROUND LUG
GND	GROUND
GV	GAS VALVE
HPC	HIGH PRESSURE CONTROL
IBM	INDOOR BLOWER MOTOR
IDM	INDUCED DRAFT MOTOR
IFC	INTEGRATED FURNACE CONTROL
LAC	LOW AMBIENT CONTROL
LPC	LOW PRESSURE CONTROL
MAS	MIXED AIR SENSOR
MLC	MAIN LIMIT CONTROL
MRLC	MANUAL RESET LIMIT CONTROL
NPC	NEGATIVE PRESSURE SWITCH
OAT	OUTSIDE AIR SENSOR
OFM	OUTDOOR FAN MOTOR
PL	PLUG
PT	POWER TRANSFORMER
RAT	RETURN AIR SENSOR
RC	RUN CAPACITOR
RTU-C	ROOFTOP UNIT CONTROL
SE	SPARK ELECTRODE
US	UNLOADER SOLENOID
VFD	VARIABLE FREQUENCY DRIVE

WIRE COLOR CODE

BK.....BLACK	G.....GREEN	PR.....PURPLE
BR.....BROWN	GY.....GRAY	R.....RED
BL.....BLUE	O.....ORANGE	W .....WHITE
		Y.....YELLOW

ELECTRICAL WIRING SCHEMATIC

GE DDC 2 STG VFD 150
208/230/380/460V, 3PH, 60HZ

GE DDC 2 STG 120
380-415V, 3PH, 50HZ

APPROVED:	CHECKED:	ORIGINAL RELEASE NO.:
MODELED BY: JHB	DATE: 3-19-18	R-1071S208
PART NO.: 90-106178-19		REV: 00