WIRING DIAGRAM

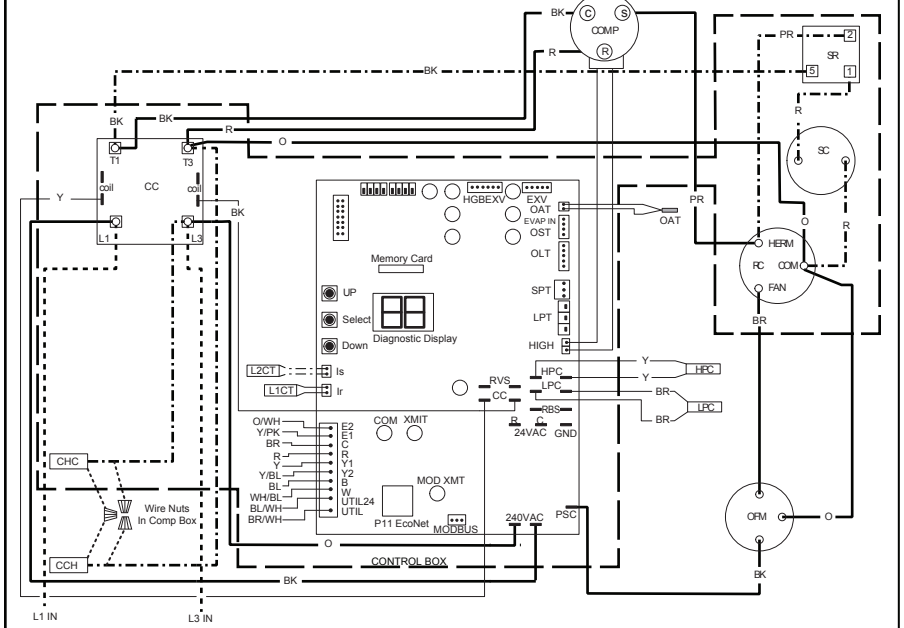

SCHEMATIC DIAGRAM

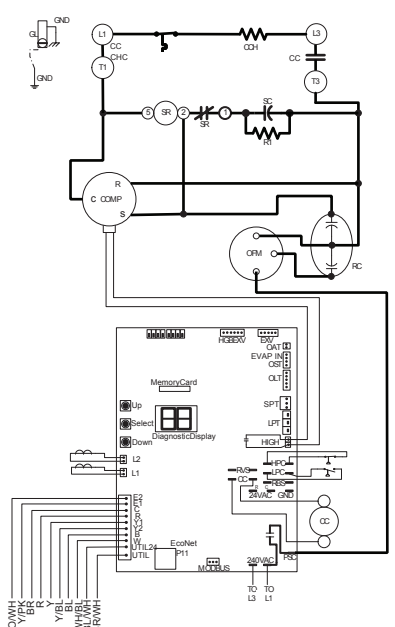

NOTES

1.... CONNECTORS SUITABLE FOR USE WITH COPPER CONDUCTORS ONLY.

2.... COMPRESSOR MOTOR THERMALLY PROTECTED.

3.... CONNECT FIELD WIRING IN GROUNDED RAINTIGHT CONDUIT TO FUSED DISCONNECT, VOLTAGE, HERTZ AND PHASE PER RATING, AND PER NATIONAL AND LOCAL CODES.

4.... LOW VOLTAGE CIRCUIT TO BE N.E.C. CLASS 2 WITH A CLASS 2 TRANSFORMAER 24 VOLT, 50 OR 60 HZ. MIN 18 AWG.

5.... TO THERMOSTAT, REFER TO SYSTEM SCHEMATICS OR SCHEMATICS ON INDOOR SECTION FOR LOW VOLTAGE CONTROL WIRING.

6.... UP, SELECT, AND DOWN, PUSH BUTTONS USED FOR TEST AND DIAGNOSTIC RECALL , SEE PUSH BUTTON LABEL FOR DETAILS.

7.... DUAL 7-SEGMENT LED DISPLAY TO DISPLAY DIAGNOSTIC CODES, SEE DIAGNOSTIC LABEL FOR DETAILS.

8.... SOLID ON INDICATES Y1 CALL PRESET AT ICC CONTROL

9.... LPC AND HPC ARE AUTOMATIC RESETSWITCHES.

WIRING INFORMATION

LINE VOLTAGE
- -FACTORY STANDARD
- -FACTORY OPTION
- -FIELD INSTALLED

LOW VOLTAGE
- -FACTORY STANDARD
- -FIELD INSTALLED
- REPLACEMENT WIRE
- -MUST BE THE SAME SIZE AND TYPE OF INSULATION AS ORIGINAL (105C. MIN.)

WARNING
-CABINET MUST BE PERMANENTLY GROUNDED AND CONFORM TO I.E.C., N.E.C., C.E.C., NATIONAL WIRING REGULATIONS, AND LOCAL CODES AS APPLICABLE.

COMPONENT CODES

CC.....COMPRESSOR CONTACTOR
CCH.....CRANK CASE HEATER
CHC.....C C H THERMISTOR
COM.....COMMON CONNECTION
COMP.....COMPRESSOR
EVAP.....COIL TEMP
EXV (5 PIN)....ELEC. TX VALVE
EXV (2 PIN)....ELEC. TX THERMISTOR
FAN.....OUTDOOR FAN CONNECTION
GND.....GROUND
HGBEXV..... - - FOR FUTURE USE - -
HIGH.....HIGH STAGE CONNECTION
HPC.....HIGH PRESS. CONT.
L1CT.....RUN CURRENT SENS. TRANS.
L2CT.....START CURRENT SENS. TRANS.
LPC.....LOW PRESSURE CONTROL
LPT..... - - FOR FUTURE USE - -
OAT.....OUTDOOR AIR TEMP.
OFM.....OUTDOOR FAN MOTOR
OLT..... - - FOR FUTURE USE - -
OST.....SUCTION TEMP CONN.
P11.....RJ 14 COM TAP
PSC..... PSC MTR. CONN.
RBS..... - - FOR FUTURE USE - -
RC.....RUN CAPACITOR
RVS.....REVERSING VALVE CONN.
SC.....START CAPACITOR
SPT.....JUNCTION PRESS. TRANS CONN.
SR.....START RELAY
.....WIRE NUT
24 VAC.....24 VAC INPUT

WIRE COLOR CODE

BK.....BLACK	G.....GREEN	PR.....PURPLE
BR.....BROWN	G Y .....GRAY	R.....RED
BL.....BLUE	O.....ORANGE	W .....WHITE
		Y.....YELLOW

ELECTRICAL WIRING DIAGRAM

2 STAGE ECO NET
DEFORST CONTROL
(AC ONLY)
W/ PSC OUTDOOR FAN MOTOR

PART NO.: 90-101229-33 REV: 02