MITSUBISHI ELECTRIC

SPLIT-TYPE, HEAT PUMP AIR CONDITIONERS
SPLIT-TYPE, AIR CONDITIONERS

January 2019

TECHNICAL DATA BOOK R410A

No. M-E0680
REVISED EDITION-C for METUS

NON-INVERTER / INVERTER / HYPER HEATING INVERTER

SINGLE-USE

<Indoor unit>
[Model names]

MS-A09/12WA
MSZ-GL09/12/15/18/24NA
MSY-GL09/12/15/18/24NA
MSZ-HM09/12/15/18/24NA
MSZ-FH06/09/12/15NA
MSZ-FH18NA2
MSZ-FE09/12NA
MSZ-D30/36NA
MSY-D30/36NA
SEZ-KD09/12/15/18NA4
SLZ-KA09/12/15NA
PEAD-A09/12/15/18AA7
SVZ-KP12/18NA
MFZ-KJ09/12/15/18/NA

<Outdoor unit>
[Model names]

MU-A09/12WA
MUZ-GL09/12/15/18/24NA
MUZ-GL09/12/15/18/24NAH
MUY-GL09/12/15/18/24NA
MUZ-HM09/12/15/18/24NA2
MUZ-FH06/09/12/15NA
MUZ-FH18NA2
MUZ-FH06/09/12/15NAH
MUZ-FH18NAH2
MUZ-FE09/12NAH
MUZ-D30/36NA
MUY-D30/36NA
SUZ-KA09/12/15/18NA
MUFZ-KJ09/12/15/18/NAHZ

MULTI-USE

<Outdoor unit>
[Model names]

MXZ-2C20NA2
MXZ-3C24NA2
MXZ-3C30NA2
MXZ-4C36NA2
MXZ-5C42NA2
MXZ-8C48NA
MXZ-8C60NA
MXZ-2C20NAHZ2
MXZ-3C24NAHZ2
MXZ-3C30NAHZ2
MXZ-4C36NAHZ
MXZ-5C42NAHZ
MXZ-8C48NAHZ

<Branch box>
[Model names]

PAC-MKA51BC
PAC-MKA31BC
(Indispensable optional parts for MXZ-8C48/8C60NA and MXZ-4C36/5C42/8C48NAHZ)

<Indoor unit>
[Model names]

MSZ-GL06NA (for MXZ connection only)
MVZ-A12/18/24/30/36AA7 (for MXZ connection only)
MSZ-EF09/12/15/18NAW (for MXZ connection only)
MSZ-EF09/12/15/18NAB
MSZ-EF09/12/15/18NAS
MLZ-KP09/12/18NA (for MXZ connection only)

CONTENTS

A. SINGLE-USE

B. MULTI-USE

MXZ-2C20NA2 MXZ-3C24NA2 MXZ-3C30NA2 MXZ-4C36NA2 MXZ-5C42NA2 MXZ-2C20NAHZ2 MXZ-3C24NAHZ2 MXZ-3C30NAHZ2

MXZ-8C48NA MXZ-8C60NA MXZ-4C36NAHZ MXZ-5C42NAHZ MXZ-8C48NAHZ

MSZ-EF09NAW MSZ-EF09NAB MSZ-EF09NAS
MSZ-EF12NAW MSZ-EF12NAB MSZ-EF12NAS
MSZ-EF15NAW MSZ-EF15NAB MSZ-EF15NAS
MSZ-EF18NAW MSZ-EF18NAB MSZ-EF18NAS
(for MXZ connection only.)

MLZ-KP09NA MLZ-KP12NA MLZ-KP18NA
(for MXZ connection only.)

MVZ-A12AA7 MVZ-A18AA7 MVZ-A24AA7 MVZ-A30AA7 MVZ-A36AA7
(for MXZ connection only.)

A. SINGLE-USE

1 REFERENCE SERVICE MANUAL

For information on service, please refer to the service manual as follows.

1-1. INDOOR UNIT

Model name	Service Ref.	Service Manual No.
MS-A09/12WA	MS-A09/12WA-1	OB448C
MSZ-GL06/09/12/15/18/24NA MSY-GL09/12/15/18/24NA	MSZ-GL06※/09/12/15/18/24NA-U1 MSY-GL09/12/15/18/24NA-U1	OBH732C OBB732C
MSZ-HM09/12/15/18/24NA	MSZ-HM09/12/15/18/24NA-U1	OBH746B OBB746C
MSZ-FH06/09/12/15NA MSZ-FH18NA2	MSZ-FH06/09/12/15NA MSZ-FH18NA2	OBH683D OBB683D
MSZ-FE09/12NA	MSZ-FE09/12NA-8	OBH542B OBB542D
MSZ-D30/36NA MSY-D30/36NA	MSZ-D30/36NA-8 MSY-D30/36NA-8	OBH501C OBB501C
SEZ-KD09/12/15/18NA4	SEZ-KD09/12/15/18NA4R1.TH	HWE0802B BWE1147B
SLZ-KA09/12/15NA	SLZ-KA09/12/15NAR1.TH	OCH487B OCB487B
PEAD-A09/12/15/18AA7	PEAD-A09/12/15/18AA7	HWE1608A BWE01629A
SVZ-KP12/18NA	SVZ-KP12/18NA	MD-1404-K019 MD-1404-K018
MFZ-KJ09/12/15/18NA	MFZ-KJ09/12/15/18NA-U1	OBH752B OBB752

※ For MXZ connection only.

1-2. OUTDOOR UNIT

Model name	Service Ref.	Service Manual No.
MU-A09/12/WA	MU-A09WA MU-A12WA-1	OB449A
MUZ-GL09/12/15/18/24NA MUZ-GL09/12/15/18/24NAH	MUZ-GL09NA-U1 MUZ-GL09NA-U8 MUZ-GL12/15/18/24NA-U1 MUZ-GL09NAH-U1 MUZ-GL09NAH-U8 MUZ-GL12/15/18/24NAH-U1 MUY-GL09/12/15/18/24NA-U1	OBH733E OBB733E
MUZ-HM09/12/15/18/24NA2	MUZ-HM09/12/15/18/24NA2-U1 MUZ-HM09/12NA2-U8	OBH747D OBB747B
MUZ-FH06/09/12/15NA MUZ-FH18NA2 MUZ-FH06/09/12/15NAH MUZ-FH18NAH2	MUZ-FH06/15NA MUZ-FH09/12NA-1 MUZ-FH18NA2 MUZ-FH06/15NAH MUZ-FH09/12NAH-1 MUZ-FH18NAH2	OBH684D OBB684B
MUZ-FE09/12NAH	MUZ-FE09/12NAH	OBH543F OBB543D
MUZ-D30/36NA MUY-D30/36NA	MUZ-D30/36NA-1 MUY-D30/36NA-1	OBH502E OBB502B
SUZ-KA09/12/15/18NA	SUZ-KA09/12/15/18NA.TH	OCH467C OCB467B
MUFZ-KJ09/12/15/18NAHZ	MUFZ-KJ09/12/15/18NAHZ-U1	OBH753B OBB753

2 SPECIFICATIONS

MS-A09WA MS-A12WA

Indoor unit model			MS-A09WA	MS-A12WA
External finish			White	
Power supply	V, phase, Hz		115, 1, 60	
Disconnect switch	A		15	
Min. circuit ampacity	A		1.2	
Fan motor	F.L.A		0.95	
Airflow Low–Med.–High–Powerful	COOL Dry (Wet)	CFM	183 - 261 - 335 - 367 (162 - 233 - 300 - 328)	222 - 286 - 406 - 446 (198 - 254 - 363 - 399)
Moisture removal	pt./h		2.7	3.2
Sound level Low–Med.–High–Powerful	dB(A)		26 - 32 - 40 - 42	33 - 38 - 45 - 47
Cond. drain connection O.D.	in.		5/8	
Dimensions	W	in.	30-11/16	
	D		8-1/4	
	H		11/-3/4	
Weight	lb.		23	
Remote controller			Wireless type	
Control voltage (by built-in transformer)			115 VAC	

NOTE : Test conditions are based on ARI 210/240
❊1 : Rating conditions (cooling) — Indoor : 80˚FDB, 67˚FWB, Outdoor : 95˚FDB, (75˚FWB) Rated frequency : 60Hz

Operating Range

		Indoor intake air temperature	Outdoor intake air temperature
Cooling	Maximum	95˚FDB, 71˚FWB	115˚FDB
	Minimum	67˚FDB, 57˚FWB	67˚FDB

MU-A09WA MU-A12WA

Outdoor unit model			MU-A09WA	MU-A12WA
Capacity Rated(Minimum~Maximum)	Cooling ※1	Btu/h	9,500	12,000
Power consumption Rated(Minimum~Maximum)	Cooling ※1	W	870	1,070
EER ※1 [SEER] ※2	Cooling		10.9 [13.0]	11.2 [13.0]
External finish			Munsell 3Y 7.8/1.1	
Power factor	Cooling (208/230)	%	99	
Power supply		V, phase, Hz	115, 1, 60	
Max. fuse size (time delay)		A	15	20
Min. circuit ampacity		A	14	16
Fan motor		F.L.A	0.63	0.926
Compressor	Model		RN092WHDHT	RN110WHDHT
	Winding resistance (at 68°F) Ω		C-R 0.81 C-S 1.49	C-R 0.66 C-S 1.23
		R.L.A	9.30	10.82
		L.R.A	47	56
Refrigerant control			Capillary tube	
Sound level		dB(A)	47	52
Dimensions	W	in.	31-1/2	33-7/16
	D	in.	11-1/4	11-7/16
	H	in.	21-5/8	23-13/16
Weight		lb.	78	96
REMOTE CONTROLLER			Wireless type	
REFRIGERANT PIPING			Not supplied	
Refrigerant pipe size (Min. wall thickness)	Liquid	in.	1/4 (0.0315)	
	Gas	in.	3/8 (0.0315)	1/2 (0.0315)
Connection method	Indoor		Flared	
	Outdoor		Flared	
Between the indoor & outdoor units	Height difference	ft.	35	
	Piping length	ft.	65	
Refrigerant charge (R410A)			2lb.5oz.	3lb. 1oz.
Refrigerating oil (Model)		fl oz. (L)	11.8 (0.35)/(NE022)	

NOTE : Test conditions are based on ARI 210/240.
※1 : Rating conditions (cooling) — Indoor : 80˚FDB, 67˚FWB, Outdoor : 95˚FDB, (75˚FWB)

※2 (Unit : [°F])

	Mode	Test	Indoor air condition		Outdoor air condition	
			Dry bulb	Wet bulb	Dry bulb	Wet bulb
ARI	SEER (Cooling)	"A" Cooling Steady State at rated compressor Speed	80	67	95	(75)
		"B-2" Cooling Steady State at rated compressor Speed	80	67	82	(65)
		"B-1" Cooling Steady State at minimum compressor Speed	80	67	82	(65)
		Low ambient Cooling Steady State at minimum compressor Speed	80	67	67	(53.5)
		Intermediate Cooling Steady State At Intermediate compressor Speed	80	67	87	(69)

OPERATING RANGE

(1) POWER SUPPLY

	Rating	Guaranteed Voltage
Outdoor unit	115V 60Hz 1ϕ	Min. 103V 115V Max. 127V

(2) OPERATION

Function	Intake air temperature / Condition	Indoor		Outdoor	
		DB (°F)	WB (°F)	DB (°F)	WB (°F)
Cooling	Standard temperature	80	67	95	—
	Maximum temperature	95	71	115	—
	Minimum temperature	67	57	67	—
	Maximum humidity	78%		—	

MSZ-GL06NA MSZ-GL09NA MSZ-GL12NA MSZ-GL15NA MSZ-GL18NA MSZ-GL24NA
MSY-GL09NA MSY-GL12NA MSY-GL15NA MSY-GL18NA MSY-GL24NA

Indoor model			**MSZ-GL06NA**	**MSZ-GL09NA** **MSY-GL09NA**	**MSZ-GL12NA** **MSY-GL12NA**
Power supply	V, phase, Hz		208/230, 1, 60		
Max. fuse size (time delay)/ Disconnect switch		A	15		
Min. circuit ampacity		A	1.0		
Fan motor		F.L.A	0.76		
Airflow Super High - High - Med. - Low - Quiet	COOL Dry (Wet)	CFM	399 - 321 - 237 - 170 - 145 (364 - 286 - 201 - 134 - 109)		
	HEAT Dry	CFM	406 - 321 - 237 - 170 - 145		
Moisture removal		pt./h	–	1.5	2.5
Sound level Super High - High - Med. - Low - Quiet	Cooling	dB(A)	43 - 37 - 30 - 22 - 19		45 - 37 - 30 - 22 - 19
	Heating (**MSZ**)	dB(A)			43 - 37 - 30 - 22 - 19
Fan speed Super High - High - Med. - Low - Quiet	Cooling	rpm	1,020 - 860 - 670 - 530 - 470		
	Heating (**MSZ**)	rpm	1,040 - 860 - 670 - 530 - 470		
Cond. drain connection O.D.		in.	5/8		
Dimensions	W	in.	31-7/16		
	D		9-1/8		
	H		11-5/8		
Weight		lb.	22		
External finish			Munsell 1.0Y 9.2/0.2		
Control voltage (by built-in transformer)			12 - 24 VDC		

Indoor model			**MSZ-GL15NA** **MSY-GL15NA**	**MSZ-GL18NA** **MSY-GL18NA**	**MSZ-GL24NA** **MSY-GL24NA**
Power supply	V, phase, Hz		208/230, 1, 60		
Max. fuse size (time delay)/ Disconnect switch		A	15		20/15
Min. circuit ampacity		A	1.0		
Fan motor		F.L.A	0.76	0.67	0.76
Airflow Super High - High - Med. - Low - Quiet (**GL15/18**) Powerful - Super High - High - Med. - Low (**GL24**)	COOL Dry (Wet)	CFM	533 - 420 - 335 - 272 - 205 (498 - 385 - 300 - 237 - 170)	646 - 522 - 417 - 332 - 258 (581 - 470 - 375 - 299 - 232)	738 - 628 - 544 - 469 - 388 (661 - 562 - 487 - 420 - 347)
	HEAT Dry (**MSZ**)	CFM	463 - 367 - 304 - 247 - 205	646 - 565 - 469 - 385 - 297	738 - 628 - 544 - 469 - 388
Moisture removal		pt./h	2.7	2.1	5.1
Sound level Super High - High - Med. - Low - Quiet (**GL15/18**) Powerful - Super High - High - Med. - Low (**GL24**)	Cooling	dB(A)	49 - 44 - 38 - 32 - 26	49 - 44 - 38 - 33 - 28	53 - 49 - 45 - 41 - 34
	Heating (**MSZ**)	dB(A)	46 - 40 - 35 - 30 - 26	48 - 43 - 38 - 33 - 28	52 - 49 - 45 - 41 - 32
Fan speed Super High - High - Med. - Low - Quiet (**GL15/18**) Powerful - Super High - High - Med. - Low (**GL24**)	Cooling	rpm	1,280 - 1,060 - 880 - 740 - 600	1,170 - 990 - 830 - 700 - 580	1,300 - 1,140 - 1,010 - 900 - 770
	Heating (**MSZ**)	rpm	1,140 - 950 - 810 - 690 - 600	1,170 - 1,050 - 910 - 780 - 640	1,300 - 1,140 - 1,010 - 900 - 730
Cond. drain connection O.D.		in.	5/8		
Dimensions	W	in.	31-7/16	36-5/16	43-5/16
	D		9-1/8	9-13/16	9-3/8
	H		11-5/8	12	12-13/16
Weight		lb.	22	28	37
External finish			Munsell 1.0Y 9.2/0.2		
Control voltage (by built-in transformer)			12 - 24 VDC		

NOTE: Test conditions are based on AHRI 210/240.

OPERATING RANGE

(1) POWER SUPPLY

	Rated voltage	Guaranteed voltage (V)
Indoor unit	208/230 V 1 phase 60 Hz	Min. 187 208 230 Max. 253

(2) OPERATION

Mode	Condition	Intake air temperature (°F)			
		Indoor		Outdoor	
		DB	WB	DB	WB
Cooling	Standard temperature	80	67	95	—
	Maximum temperature	90	73	115	—
	Minimum temperature	67	57	14	—
	Maximum humidity	78%		—	
Heating	Standard temperature	70	60	47	43
	Maximum temperature	80	67	75	65
	Minimum temperature	70	60	-4	-5

OUTLET AIR SPEED AND COVERAGE

Model	Mode	Function	Airflow (CFM)	Air speed (ft./s.)	Coverage (ft.)
MSZ-GL06NA	HEAT	Dry	406	20.6	29.5
	COOL	Dry	321	16.3	23.5
		Wet	286	14.5	21.0
MSZ-GL09NA **MSY-GL09NA**	HEAT	Dry	406	20.6	29.5
	COOL	Dry	321	16.3	23.5
		Wet	286	14.5	21.0
MSZ-GL12NA **MSY-GL12NA**	HEAT	Dry	406	20.6	29.5
	COOL	Dry	321	16.3	23.5
		Wet	286	14.5	21.0
MSZ-GL15NA **MSY-GL15NA**	HEAT	Dry	463	23.4	33.5
	COOL	Dry	420	21.3	30.5
		Wet	385	19.5	28.0
MSZ-GL18NA **MSY-GL18NA**	HEAT	Dry	646	29.5	44.0
	COOL	Dry	646	29.5	44.0
		Wet	581	26.5	39.7
MSZ-GL24NA **MSY-GL24NA**	HEAT	Dry	738	18.0	36.9
	COOL	Dry	738	18.0	36.9
		Wet	661	16.1	33.2

- The air coverage is the figure up to the position where the air speed is 1 ft./s., when air is blown out horizontally from the unit properly at the High speed position.
  The coverage should be used only as a general guideline since it varies according to the size of the room and furniture arranged inside the room.

MUZ-GL09NA MUZ-GL09NAH MUY-GL09NA MUZ-GL12NA MUZ-GL12NAH MUY-GL12NA

Outdoor unit model			MUZ-GL09NA- U1 MUZ-GL09NAH- U1	MUZ-GL09NA- U8 MUZ-GL09NAH- U8	MUY-GL09NA	MUZ-GL12NA MUZ-GL12NAH	MUY-GL12NA
Capacity Rated (Minimum~Maximum)	Cooling ❊1	Btu/h	9,000 (3,600 - 12,200)			12,000 (1,500 - 13,600)	
	Heating 47 ❊1 (**MUZ**)	Btu/h	10,900 (4,500 - 15,900)	10,900 (4,500 - 14,100)	–	14,400 (2,000 - 18,100)	–
Capacity Rated (Maximum)	Heating 17 ❊2 (**MUZ**)	Btu/h	6,700 (10,200)	7,000 (9,400)	–	9,200 (12,000)	–
Power consumption Rated (Minimum~Maximum)	Cooling ❊1	W	585 (240 - 1,050)			920 (100 - 1,300)	
	Heating 47 ❊1 (**MUZ**)	W	720 (230 - 1,250)	720 (230 - 1,070)	–	1,100 (110 - 1,620)	–
Power consumption Rated (Maximum)	Heating 17 ❊2 (**MUZ**)	W	630 (1,060)	620 (790)	–	870 (1,240)	–
EER ❊1 [SEER] ❊3	Cooling		15.4 [24.6]			13.0 [23.1]	
HSPF IV ❊4	Heating (**MUZ**)		**NA:** 12.8		–	**NA:** 12.5	–
			NAH: 11.8		–	**NAH:** 11.5	–
COP	Heating ❊1 (**MUZ**)		4.44		–	3.84	–
Power factor	Cooling (208/230)	%	86/86	92/92	87/87	95/95	
	Heating (**MUZ**) (208/230)	%	90/90	95/95	–	96/96	
Power supply	V , phase , Hz		208/230, 1 , 60				
Max. fuse size (time delay)		A	15				
Min. circuit ampacity		A	9		7	9	7
Fan motor	F.L.A	A	0.50				
Compressor	Model		KNB073FRVMC	SNB092FQAMT	KNB073FRVMC	SNB092FQAMT	
	R.L.A	A	6.2		4.9	6.6	4.9
	L.R.A	A	7.7		6.1	8.2	6.1
	Refrigeration oil	fl oz. (L) (Model)	9.1 (0.27)/(FV50S)	11.8 (0.35)/(FV50S)	9.1 (0.27)/(FV50S)	11.8 (0.35)/(FV50S)	
Refrigerant control			Linear expansion valve				
Sound level ❊1	Cooling	dB(A)	48			49	49
	Heating (**MUZ**)	dB(A)	50		–	51	–
Airflow High - Med. - Low	Cooling	CFM	1,102 - 639				
	Heating (**MUZ**)	CFM	1,186 - 1,116 - 1,045		–	1,186 - 1,116 - 1,045	–
Fan speed High - Med. - Low	Cooling	rpm	810 - 490				
	Heating (**MUZ**)	rpm	870 - 820 - 770		–	870 - 820 - 770	–
Defrost method			Reverse cycle				
Dimensions	W	in.	31-1/2				
	D	in.	11-1/4				
	H	in.	21-5/8				
Weight		lb.	81				
External finish			Munsell 3Y 7.8/1.1				
Remote controller			Wireless type				
Control voltage (by built-in transformer)		VDC	12 - 24				
Refrigerant piping			Not supplied				
Refrigerant pipe size (Min. wall thickness)	Liquid	in.	1/4 (0.0315)				
	Gas	in.	3/8 (0.0315)				
Connection method	Indoor		Flared				
	Outdoor		Flared				
Between the indoor & outdoor units	Height difference	ft.	40				
	Piping length	ft.	65				
Refrigerant charge (R410A)			2 lb. 5 oz.			2 lb. 9 oz.	

NOTE: Test conditions are based on AHRI 210/240.

❊1: Rating conditions (Cooling) — Indoor: 80˚FDB, 67˚FWB, Outdoor: 95˚FDB, (75˚FWB)
(Heating) — Indoor: 70˚FDB, 60˚FWB, Outdoor: 47˚FDB, 43˚FWB

❊2: (Heating) — Indoor: 70˚FDB, 60˚FWB, Outdoor: 17˚FDB, 15˚FWB

❊3: Test condition (Refer to page 12.)

❊4: Test condition (Refer to page 12.)

MUZ-GL15NA MUZ-GL15NAH MUY-GL15NA MUZ-GL18NA MUZ-GL18NAH MUY-GL18NA MUZ-GL24NA MUZ-GL24NAH MUY-GL24NA

Outdoor unit model			MUZ-GL15NA MUZ-GL15NAH	MUY-GL15NA	MUZ-GL18NA MUZ-GL18NAH	MUY-GL18NA	MUZ-GL24NA MUZ-GL24NAH	MUY-GL24NA
Capacity Rated (Minimum~Maximum)	Cooling ❊1	Btu/h	14,000 (3,100 - 18,200)		18,000 (5,800 - 22,000)		22,500 (8,200 - 31,400)	
	Heating 47 ❊1 (**MUZ**)	Btu/h	18,000 (4,800 - 20,900)	-	21,600 (5,400 - 25,000)	-	27,600 (7,500 - 36,900)	–
Capacity Rated (Maximum)	Heating 17 ❊2 (**MUZ**)	Btu/h	12,200 (16,400)	-	13,800 (18,200)	-	16,000 (24,600)	–
Power consumption Rated (Minimum~Maximum)	Cooling ❊1	W	1,080 (210 - 2,000)		1,340 (330 - 2,150)		1,800 (570 - 3,580)	
	Heating 47 ❊1 (**MUZ**)	W	1,600 (200 - 2,010)	–	1,680 (320 - 2,500)		2,340 (520 - 3,650)	
Power consumption Rated (Maximum)	Heating 17 ❊2 (**MUZ**)	W	1,190 (1,850)	–	1,480 (2,150)	–	1,700 (3,290)	–
EER ❊1 [SEER] ❊3	Cooling		13.0 [21.6]		13.4 [20.5]		12.5 [20.5]	
HSPF IV ❊4	Heating (**MUZ**)		**NA:** 11.7	–	**NA:** 11.2	–	**NA:** 10.0	–
			NAH: 10.8	–	**NAH:** 10.2	–	**NAH:** 10.0	–
COP	Heating ❊1 (**MUZ**)		3.30	–	3.77	–	3.46	–
Power factor	Cooling (208/230)	%	97/97		99/99		99/99	
	Heating (**MUZ**) (208/230)	%	98/98		99/99	–	99/99	–
Power supply	V , phase , Hz		208/230, 1 , 60					
Max. fuse size (time delay)		A	15				20	
Min. circuit ampacity		A	10	9	14		17.1	
Fan motor		F.L.A	0.50		0.93		0.93	
Compressor	Model		SNB130FQBMT		SNB130FQBMT		SNB172FQKMT	
	R.L.A	A	7.4	6.8	10		12.9	
	L.R.A	A	9.3	8.5	12.5		16.1	
	Refrigeration oil	fl oz. (L) (Model)	11.8 (0.35)/(FV50S)		11.8 (0.35)/(FV50S)	11.8 (0.35)/(FV50S)	13.5 (0.40)/(FV50S)	
Refrigerant control			Linear expansion valve					
Sound level ❊1	Cooling	dB(A)	49	49	54		55	
	Heating (**MUZ**)	dB(A)	51	–	55	–	55	–
Airflow High - Med. - Low	COOL	CFM	1,102-639		1,742 - 922		2,016 - 1,769 - 890	
	HEAT	CFM	1,186 - 1,045 - 1,045	–	1,691 - 1,691 - 1,372	–	1,701 - 1,701 - 1,341	–
Fan speed High - Med. - Low	Cooling	rpm	810 - 490		840 - 450		950 - 840 - 450	
	Heating (**MUZ**)	rpm	870 - 770 - 770	–	810 - 810 - 650	–	810 - 810 - 650	–
Defrost method			Reverse cycle					
Dimensions	W	in.	31-1/2		33-1/16			
	D	in.	11-1/4		13			
	H	in.	21-5/8		34-5/8			
Weight		lb.	81		121		119	
External finish			Munsell 3Y 7.8/1.1					
Remote controller			Wireless type					
Control voltage (by built-in transformer)		VDC	12 - 24					
Refrigerant piping			Not supplied					
Refrigerant pipe size (Min. wall thickness)	Liquid	in.	1/4 (0.0315)				3/8 (0.0315)	
	Gas	in.	1/2 (0.0315)				5/8 (0.0315)	
Connection method	Indoor		Flared					
	Outdoor		Flared					
Between the indoor & outdoor units	Height difference	ft.	40		50			
	Piping length	ft.	65		100			
Refrigerant charge (R410A)			2 lb. 9 oz.		3 lb. 9 oz.		4 lb. 3 oz.	

NOTE: Test conditions are based on AHRI 210/240.

❊1: Rating conditions (Cooling) — Indoor: 80˚FDB, 67˚FWB, Outdoor: 95˚FDB, (75˚FWB)
(Heating) — Indoor: 70˚FDB, 60˚FWB, Outdoor: 47˚FDB, 43˚FWB

❊2: (Heating) — Indoor: 70˚FDB, 60˚FWB, Outdoor: 17˚FDB, 15˚FWB

Test condition

⁕3,⁕4

ARI	Mode	Test	Indoor air condition (°F)		Outdoor air condition (°F)	
			Dry bulb	Wet bulb	Dry bulb	Wet bulb
	SEER (Cooling)	"A-2" Cooling Steady State at rated compressor Speed	80	67	95	(75)
		"B-2" Cooling Steady State at rated compressor Speed	80	67	82	(65)
		"B-1" Cooling Steady State at minimum compressor Speed	80	67	82	(65)
		"F-1" Cooling Steady State at minimum compressor Speed	80	67	67	(53.5)
		"E-V" Cooling Steady State at Intermediate compressor Speed ⁕5	80	67	87	(69)
	HSPF (Heating)	"H1-2" Heating Steady State at rated compressor Speed	70	60	47	43
		"H3-2" Heating at rated compressor Speed	70	60	17	15
		"H0-1" Heating Steady State at minimum compressor Speed	70	60	62	56.5
		"H1-1" Heating Steady State at minimum compressor Speed	70	60	47	43
		"H2-V" Heating at Intermediate compressor Speed ⁕5	70	60	35	33

⁕5: At Intermediate compressor Speed
= ("Rated compressor speed" - "minimum compressor speed") / 3 + "minimum compressor speed".

OPERATING RANGE

(1) POWER SUPPLY

	Rated voltage	Guaranteed voltage (V)
Outdoor unit	208/230 V 1 phase 60 Hz	Min. 187 — 208 — 230 — Max. 253

(2) OPERATION

Mode	Condition	Intake air temperature (°F)			
		Indoor		Outdoor	
		DB	WB	DB	WB
Cooling	Standard temperature	80	67	95	—
	Maximum temperature	90	73	115	—
	Minimum temperature	67	57	14	—
	Maximum humidity	78 %		—	
Heating	Standard temperature	70	60	47	43
	Maximum temperature	80	67	75	65
	Minimum temperature	70	60	-4	-5

MSZ-HM09NA MSZ-HM12NA MSZ-HM15NA MSZ-HM18NA MSZ-HM24NA

Indoor model			MSZ-HM09NA	MSZ-HM12NA	MSZ-HM15NA
Power supply	V, phase, Hz		208/230, 1, 60		
Max. fuse size (time delay)/ Disconnect switch		A	15		
Min. circuit ampacity		A	1.0		
Fan motor		F.L.A	0.76		
Airflow Super High - High - Med. - Low	COOL Dry (Wet)	CFM	399 - 321 - 237 - 170 (364 - 286 - 201 - 134)		533 - 420 - 335 - 272 (498 - 385 - 300 - 237)
	HEAT Dry	CFM	406 - 321 - 237 - 170		463 - 367 - 304 - 247
Moisture removal		pt./h	1.5	2.5	2.7
Sound level Super High - High - Med. - Low	Cooling	dB(A)	43 - 37 - 30 - 22	45 - 37 - 30 - 22	49 - 44 - 38 - 32
	Heating	dB(A)	43 - 37 - 30 - 22		46 - 40 - 35 - 30
Fan speed Super High - High - Med. - Low	Cooling	rpm	1,020 - 860 - 670 - 530		1,280 - 1,060 - 880 - 740
	Heating	rpm	1,040 - 860 - 670 - 530		1,140 - 950 - 810 - 690
Cond. drain connection O.D.		in.	5/8		
Dimensions	W	in.	31-7/16		
	D		9-1/8		
	H		11-5/8		
Weight		lb.	22		
External finish			Munsell 1.0Y 9.2/0.2		
Control voltage (by built-in transformer)			12 - 24 VDC		

NOTE: Test conditions are based on AHRI 210/240.

Indoor model			MSZ-HM18NA	MSZ-HM24NA
Power supply	V, phase, Hz		208/230, 1, 60	
Max. fuse size (time delay)/ Disconnect switch		A	15	
Min. circuit ampacity		A	1.0	
Fan motor		F.L.A	0.67	
Airflow Super High - High - Med. - Low	COOL Dry (Wet)	CFM	625 - 530 - 431 - 328 (562 - 477 - 388 - 295)	702 - 530 - 431 - 353 (632 - 477 - 388 - 318)
	HEAT Dry	CFM	625 - 530 - 431 - 307	702 - 579 - 448 - 346
Moisture removal		pt./h	2.1	2.3
Sound level Super High - High - Med. - Low	Cooling	dB(A)	47 - 42 - 37 - 30	50 - 44 - 38 - 33
	Heating	dB(A)	47 - 42 - 37 - 30	50 - 44 - 38 - 32
Fan speed Super High - High - Med. - Low	Cooling	rpm	1,140 - 1,000 - 850 - 690	1,250 - 1,000 - 850 - 730
	Heating	rpm	1,140 - 1,000 - 850 - 660	1,250 - 1,070 - 880 - 720
Cond. drain connection O.D.		in.	5/8	
Dimensions	W	in.	36-5/16	
	D		9-13/16	
	H		12	
Weight		lb.	28	
External finish			Munsell 1.0Y 9.2/0.2	
Control voltage (by built-in transformer)			12 - 24 VDC	

NOTE: Test conditions are based on AHRI 210/240.

OPERATING RANGE

(1) POWER SUPPLY

	Rated voltage	Guaranteed voltage (V)
Indoor unit	208/230 V 1 phase 60 Hz	Min. 187 208 230 Max. 253

(2) OPERATION

Mode	Condition	Intake air temperature (°F)			
		Indoor		Outdoor	
		DB	WB	DB	WB
Cooling	Standard temperature	80	67	95	—
	Maximum temperature	90	73	115	—
	Minimum temperature	67	57	14	—
	Maximum humidity	78%		—	
Heating	Standard temperature	70	60	47	43
	Maximum temperature	80	67	75	65
	Minimum temperature	70	60	5	4

OUTLET AIR SPEED AND COVERAGE

Model	Mode	Function	Airflow (CFM)	Air speed (ft./s.)	Coverage (ft.)
MSZ-HM09NA	HEAT	Dry	406	20.6	29.5
	COOL	Dry	321	16.3	23.5
		Wet	286	14.5	21.0
MSZ-HM12NA	HEAT	Dry	406	20.6	29.5
	COOL	Dry	321	16.3	23.5
		Wet	286	14.5	21.0
MSZ-HM15NA	HEAT	Dry	463	23.4	33.5
	COOL	Dry	420	21.3	30.5
		Wet	385	19.5	28.0
MSZ-HM18NA	HEAT	Dry	625	28.5	42.6
	COOL	Dry	625	28.5	42.6
		Wet	562	25.6	38.4
MSZ-HM24NA	HEAT	Dry	702	32.0	47.7
	COOL	Dry	702	32.0	47.7
		Wet	632	28.8	43.1

- The air coverage is the figure up to the position where the air speed is 1 ft./s., when air is blown out horizontally from the unit properly at the High speed position.
  The coverage should be used only as a general guideline since it varies according to the size of the room and furniture arranged inside the room.

MUZ-HM09NA2

Outdoor unit model			MUZ-HM09NA - U1	MUZ-HM09NA - U8
Capacity Rated (Minimum~Maximum)	Cooling ❊1	Btu/h	9,000 (3,800 ~ 10,000)	
	Heating 47 ❊1	Btu/h	10,900 (4,500 ~ 11,800)	
Capacity Rated (Maximum)	Heating 17 ❊2	Btu/h	6,700 (7,200)	
Power consumption Rated (Minimum~Maximum)	Cooling ❊1	W	750 (240 - 850)	750 (205 - 850)
	Heating 47 ❊1	W	900 (240 - 1,000)	900 (255 - 1,000)
Power consumption Rated (Maximum)	Heating 17 ❊2	W	700 (780)	
EER ❊1 [SEER] ❊3	Cooling		12.0 [18.0]	
HSPF IV ❊4	Heating		10.0	
COP	Heating ❊1		3.55	
Power factor	Cooling (208/230)	%	87/87	84/84
	Heating (208/230)	%	90/90	90/89
Power supply	V , phase , Hz		208/230 , 1 , 60	
Max. fuse size (time delay)		A	15	
Min. circuit ampacity		A	9	12
Fan motor	F.L.A	A	0.50	
Compressor	Model		KNB073FRVMC	KNB073FQDHC
	R.L.A	A	6.2	6.6
	L.R.A	A	7.7	8.2
	Refrigeration oil	fl oz. (L) (Model)	9.1 (0.27) (FV50S)	10.8 (0.32) (NEO22)
Refrigerant control			Linear expansion valve	
Sound level ❊1	Cooling	dB(A)	46	
	Heating	dB(A)	50	
Airflow High - Med. - Low	Cooling	CFM	1,063	
	Heating	CFM	1,282 - 1,105	1,240 - 1,105
Fan speed High - Med. - Low	Cooling	rpm	740	
	Heating	rpm	890 - 770	860 - 770
Defrost method			Reverse cycle	
Dimensions	W	in.	31-1/2	
	D	in.	11-1/4	
	H	in.	21-5/8	
Weight		lb.	73	
External finish			Munsell 3Y 7.8/1.1	
Refrigerant piping			Not supplied	
Refrigerant pipe size (Min. wall thickness)	Liquid	in.	1/4 (0.0315)	
	Gas	in.	3/8 (0.0315)	
Connection method	Indoor		Flared	
	Outdoor		Flared	
Between the indoor & outdoor units	Height difference	ft.	40	
	Piping length	ft.	65	
Refrigerant charge (R410A)			1 lb. 12 oz.	

NOTE: Test conditions are based on AHRI 210/240.

❊1: Rating conditions (Cooling) — Indoor: 80˚FDB, 67˚FWB, Outdoor: 95˚FDB, (75˚FWB)
(Heating) — Indoor: 70˚FDB, 60˚FWB, Outdoor: 47˚FDB, 43˚FWB

❊2: (Heating) — Indoor: 70˚FDB, 60˚FWB, Outdoor: 17˚FDB, 15˚FWB

❊3: Test condition (Refer to page 19.)

❊4: Test condition (Refer to page 19.)

MUZ-HM12NA2

Outdoor unit model			MUZ-HM12NA - U1	MUZ-HM12NA - U8
Capacity Rated (Minimum~Maximum)	Cooling ❊1	Btu/h	12,000 (3,800 ~ 12,200)	
	Heating 47 ❊1	Btu/h	12,200 (4,500 ~ 14,500)	12,200 (5,500 ~ 14,500)
Capacity Rated (Maximum)	Heating 17 ❊2	Btu/h	7,600 (9,000)	
Power consumption Rated (Minimum~Maximum)	Cooling ❊1	W	1,210 (240 - 1,300)	1,210 (205 - 1,300)
	Heating 47 ❊1	W	990 (240 - 1,220)	990 (340 - 1,660)
Power consumption Rated (Maximum)	Heating 17 ❊2	W	800 (990)	
EER ❊1 [SEER] ❊3	Cooling		9.9 [18.0]	
HSPF IV ❊4	Heating		10.0	
COP	Heating ❊1		3.61	
Power factor	Cooling (208/230)	%	95/95	94/94
	Heating (208/230)	%	93/93	95/96
Power supply	V , phase , Hz		208/230 , 1 , 60	
Max. fuse size (time delay)		A	15	
Min. circuit ampacity		A	9	12
Fan motor	F.L.A	A	0.50	
Compressor	Model		KNB073FRVMC	KNB092FQAHC
	R.L.A	A	6.2	6.6
	L.R.A	A	7.7	8.2
	Refrigeration oil	fl oz. (L) (Model)	9.1 (0.27) (FV50S)	10.8 (0.32) (NEO22)
Refrigerant control			Linear expansion valve	
Sound level ❊1	Cooling	dB(A)	49	
	Heating	dB(A)	51	
Airflow High - Med. - Low	Cooling	CFM	1,063	1,102 - 639
	Heating	CFM	1,282 - 1,105	1,186 - 1,116 - 1,045
Fan speed High - Med. - Low	Cooling	rpm	740	810 - 490
	Heating	rpm	890 - 770	870 - 820 - 770
Defrost method			Reverse cycle	
Dimensions	W	in.	31-1/2	
	D	in.	11-1/4	
	H	in.	21-5/8	
Weight		lb.	73	
External finish			Munsell 3Y 7.8/1.1	
Refrigerant piping			Not supplied	
Refrigerant pipe size (Min. wall thickness)	Liquid	in.	1/4 (0.0315)	
	Gas	in.	3/8 (0.0315)	
Connection method	Indoor		Flared	
	Outdoor		Flared	
Between the indoor & outdoor units	Height difference	ft.	40	
	Piping length	ft.	65	
Refrigerant charge (R410A)			1 lb. 12 oz.	2 lb. 9 oz.

NOTE: Test conditions are based on AHRI 210/240.

❊1: Rating conditions (Cooling) — Indoor: 80˚FDB, 67˚FWB, Outdoor: 95˚FDB, (75˚FWB)
(Heating) — Indoor: 70˚FDB, 60˚FWB, Outdoor: 47˚FDB, 43˚FWB

❊2: (Heating) — Indoor: 70˚FDB, 60˚FWB, Outdoor: 17˚FDB, 15˚FWB

❊3: Test condition (Refer to page 19.)

❊4: Test condition (Refer to page 19.)

MUZ-HM15NA2 MUZ-HM18NA2

Outdoor unit model			MUZ-HM15NA	MUZ-HM18NA
Capacity Rated (Minimum~Maximum)	Cooling ❊1	Btu/h	14,000 (3,100 - 16,000)	17,200 (5,800 - 18,000)
	Heating 47 ❊1	Btu/h	18,000 (4,800 - 18,500)	18,000 (5,400 - 20,900)
Capacity Rated (Maximum)	Heating 17 ❊2	Btu/h	11,500 (14,000)	11,500 (15,000)
Power consumption Rated (Minimum~Maximum)	Cooling ❊1	W	1,170 (230 - 2,000)	1,640 (350 - 2,070)
	Heating 47 ❊1	W	1,600 (220 - 2,010)	1,590 (320 - 2,250)
Power consumption Rated (Maximum)	Heating 17 ❊2	W	1,320 (1,850)	1,300 (1,950)
EER ❊1 [SEER] ❊3	Cooling		12.0 [18.0]	10.5 [18.0]
HSPF IV ❊4	Heating		10.0	
COP	Heating ❊1		3.30	3.32
Power factor	Cooling (208/230)	%	98/98	98/98
	Heating (208/230)	%	98/98	97/97
Power supply	V , phase , Hz		208/230, 1 , 60	208/230, 1 , 60
Max. fuse size (time delay)		A	15	15
Min. circuit ampacity		A	10	10
Fan motor	F.L.A	A	0.50	0.50
Compressor	Model		SNB130FQBMT	SNB130FQBMT
	R.L.A	A	7.4	7.4
	L.R.A	A	9.3	9.3
	Refrigeration oil	fl oz. (L) (Model)	11.8 (0.35) (FV50S)	11.8 (0.35) (FV50S)
Refrigerant control			Linear expansion valve	
Sound level ❊1	Cooling	dB(A)	49	49
	Heating	dB(A)	51	51
Airflow High - Med. - Low	Cooling	CFM	1,102 - 639	1,102 - 639
	Heating	CFM	1,186 - 1,045 - 1,045	1,186 - 1,045 - 1,045
Fan speed High - Med. - Low	Cooling	rpm	810 - 490	810 - 490
	Heating	rpm	870 - 770 - 770	870 - 770 - 770
Defrost method			Reverse cycle	
Dimensions	W	in.	31-1/2	31-1/2
	D	in.	11-1/4	11-1/4
	H	in.	21-5/8	21-5/8
Weight		lb.	81	81
External finish			Munsell 3Y 7.8/1.1	
Refrigerant piping			Not supplied	
Refrigerant pipe size (Min. wall thickness)	Liquid	in.	1/4 (0.0315)	1/4 (0.0315)
	Gas	in.	1/2 (0.0315)	1/2 (0.0315)
Connection method	Indoor		Flared	Flared
	Outdoor		Flared	Flared
Between the indoor & outdoor units	Height difference	ft.	40	40
	Piping length	ft.	65	65
Refrigerant charge (R410A)			2 lb. 9 oz.	2 lb. 10 oz.

NOTE: Test conditions are based on AHRI 210/240.

❊1: Rating conditions (Cooling) — Indoor: 80˚FDB, 67˚FWB, Outdoor: 95˚FDB, (75˚FWB)
(Heating) — Indoor: 70˚FDB, 60˚FWB, Outdoor: 47˚FDB, 43˚FWB

❊2: (Heating) — Indoor: 70˚FDB, 60˚FWB, Outdoor: 17˚FDB, 15˚FWB

❊3: Test condition (Refer to page 19.)

❊4: Test condition (Refer to page 19.)

MUZ-HM24NA2

Outdoor unit model			MUZ-HM24NA
Capacity Rated (Minimum~Maximum)	Cooling ⁕1	Btu/h	22,500 (5,800 - 22,500)
	Heating 47 ⁕1	Btu/h	26,000 (5,400 - 26,000)
Capacity Rated (Maximum)	Heating 17 ⁕2	Btu/h	18,500 (18,500)
Power consumption Rated (Minimum~Maximum)	Cooling ⁕1	W	2,630 (320 - 2,630)
	Heating 47 ⁕1	W	2,500 (320 - 2,500)
Power consumption Rated (Maximum)	Heating 17 ⁕2	W	2,300 (2,300)
EER ⁕1 [SEER] ⁕3	Cooling		8.6 [18.0]
HSPF IV ⁕4	Heating		9.5
COP	Heating ⁕1		3.05
Power factor	Cooling (208/230)	%	99/99
	Heating (208/230)	%	99/99
Power supply	V , phase , Hz		208/230, 1 , 60
Max. fuse size (time delay)		A	15
Min. circuit ampacity		A	14
Fan motor		F.L.A	0.93
Compressor	Model		SNB130FQBMT
		R.L.A	10
		L.R.A	12.5
	Refrigeration oil	fl oz. (L) (Model)	11.8 (0.35) (FV50S)
Refrigerant control			Linear expansion valve
Sound level ⁕1	Cooling	dB(A)	54
	Heating	dB(A)	55
Airflow High - Med. - Low	COOL	CFM	1,742 - 922
	HEAT	CFM	1,691 - 1,691 - 1,372
Fan speed High - Med. - Low	Cooling	rpm	840 - 450
	Heating	rpm	810 - 810 - 650
Defrost method			Reverse cycle
Dimensions	W	in.	33-1/16
	D	in.	13
	H	in.	34-5/8
Weight		lb.	121
External finish			Munsell 3Y 7.8/1.1
Refrigerant piping			Not supplied
Refrigerant pipe size (Min. wall thickness)	Liquid	in.	3/8 (0.0315)
	Gas	in.	5/8 (0.0315)
Connection method	Indoor		Flared
	Outdoor		Flared
Between the indoor & outdoor units	Height difference	ft.	50
	Piping length	ft.	100
Refrigerant charge (R410A)			3 lb. 9 oz.

NOTE: Test conditions are based on AHRI 210/240.

⁕1: Rating conditions (Cooling) — Indoor: 80˚FDB, 67˚FWB, Outdoor: 95˚FDB, (75˚FWB)
(Heating) — Indoor: 70˚FDB, 60˚FWB, Outdoor: 47˚FDB, 43˚FWB

⁕2: (Heating) — Indoor: 70˚FDB, 60˚FWB, Outdoor: 17˚FDB, 15˚FWB

Test condition

❊3,❊4

ARI	Mode	Test	Indoor air condition (°F)		Outdoor air condition (°F)	
			Dry bulb	Wet bulb	Dry bulb	Wet bulb
	SEER (Cooling)	"A-2" Cooling Steady State at rated compressor Speed	80	67	95	(75)
		"B-2" Cooling Steady State at rated compressor Speed	80	67	82	(65)
		"B-1" Cooling Steady State at minimum compressor Speed	80	67	82	(65)
		"F-1" Cooling Steady State at minimum compressor Speed	80	67	67	(53.5)
		"E-V" Cooling Steady State at Intermediate compressor Speed ❊5	80	67	87	(69)
	HSPF (Heating)	"H1-2" Heating Steady State at rated compressor Speed	70	60	47	43
		"H3-2" Heating at rated compressor Speed	70	60	17	15
		"H0-1" Heating Steady State at minimum compressor Speed	70	60	62	56.5
		"H1-1" Heating Steady State at minimum compressor Speed	70	60	47	43
		"H2-V" Heating at Intermediate compressor Speed ❊5	70	60	35	33

❊5: At Intermediate compressor Speed
= ("Rated compressor speed" - "minimum compressor speed") / 3 + "minimum compressor speed".

OPERATING RANGE

(1) POWER SUPPLY

	Rated voltage	Guaranteed voltage (V)
Outdoor unit	208/230 V 1 phase 60 Hz	Min. 187 — 208 — 230 — Max. 253

(2) OPERATION

Mode	Condition	Intake air temperature (°F)			
		Indoor		Outdoor	
		DB	WB	DB	WB
Cooling	Standard temperature	80	67	95	—
	Maximum temperature	90	73	115	—
	Minimum temperature	67	57	14	—
	Maximum humidity	78 %		—	
Heating	Standard temperature	70	60	47	43
	Maximum temperature	80	67	75	65
	Minimum temperature	70	60	5	4

MSZ-FH06NA MSZ-FH09NA MSZ-FH12NA MSZ-FH15NA MSZ-FH18NA2

Indoor unit model			MSZ-FH06NA	MSZ-FH09NA	MSZ-FH12NA	MSZ-FH15NA	MSZ-FH18NA2
Power supply	V, phase, Hz		208/230 , 1 , 60				
Disconnect switch		A	15				
Min. circuit ampacity		A	1.0				
Fan motor		F.L.A	0.67				
Airflow Super high - High - Med. - Low - Quiet	COOL Dry (Wet)	CFM	381- 304 - 221 - 167 - 137 (328 - 261 - 190 - 143 - 117)	381- 304 - 221 - 167 - 137 (328 - 261 - 190 - 143 - 117)	398 - 304 - 221 - 167 - 137 (342 - 261 - 190 - 143 - 117)	411 - 355 - 304 - 262 - 225 (354 - 305 - 261 - 225 - 194)	459 - 355 - 304 - 262 - 225 (395 - 305 - 261 - 225 - 194)
	HEAT Dry	CFM	437 - 325 - 225 - 167 - 140	437 - 325 - 225 - 167 - 140	454 - 325 - 225 - 167 - 140	497 - 394 - 317 - 254 - 201	514 - 394 - 317 - 254 - 201
Moisture removal		pt./h	0.2	0.6	1.9	4.0	4.8
Sound level Super high - High - Med. - Low - Quiet	Cooling	dB(A)	40 - 36 - 29 - 23 - 20	40 - 36 - 29 - 23 - 20	41 - 36 - 29 - 24 - 21	44 - 39 - 35 - 31 - 27	47 - 39 - 35 - 31 - 27
	Heating	dB(A)	42 - 36 - 29 - 24 - 20	42 - 36 - 29 - 24 - 20	42 - 36 - 29 - 24 - 21	46 - 39 - 34 - 29 - 25	46 - 39 - 34 - 29 - 25
Cond. drain connection O.D.		in.	5/8				
Dimensions	W	in.	36-7/16				
	D		9-3/16				
	H		12 (+ 11/16)				
Weight		lb.	29				
External finish			Munsell 1.0Y 9.2/0.2				
Remote controller			Wireless type				
Control voltage (by built-in transformer)			12 - 24 VDC				

NOTE: Test conditions are based on AHRI 210/240.

OUTLET AIR SPEED AND COVERAGE

Model	Mode	Function	Airflow (CFM)	Air speed (ft./s)	Coverage (ft.)
MSZ-FH06NA	HEAT	Dry	437	19.5	29.8
	COOL	Dry	381	17.0	26.1
		Wet	328	14.6	22.5
MSZ-FH09NA	HEAT	Dry	437	19.5	29.8
	COOL	Dry	381	17.0	26.1
		Wet	328	14.6	22.5
MSZ-FH12NA	HEAT	Dry	454	20.3	31.0
	COOL	Dry	398	17.8	27.3
		Wet	342	15.3	23.5
MSZ-FH15NA	HEAT	Dry	497	22.2	33.8
	COOL	Dry	411	18.3	28.0
		Wet	354	15.7	24.1
MSZ-FH18NA2	HEAT	Dry	514	23.0	34.9
	COOL	Dry	459	20.5	31.2
		Wet	395	17.6	27.0

- The air coverage is the figure up to the position where the air speed is 1 ft./s, when air is blown out horizontally from the unit properly at the High speed position.
  The coverage should be used only as a general guideline since it varies according to the size of the room and furniture arranged inside the room.

MUZ-FH06NA MUZ-FH06NAH MUZ-FH09NA MUZ-FH09NAH MUZ-FH12NA MUZ-FH12NAH MUZ-FH15NA MUZ-FH15NAH MUZ-FH18NA2 MUZ-FH18NAH2

Outdoor unit model			MUZ-FH06NA MUZ-FH06NAH	MUZ-FH09NA MUZ-FH09NAH	MUZ-FH12NA MUZ-FH12NAH	MUZ-FH15NA MUZ-FH15NAH	MUZ-FH18NA2 MUZ-FH18NAH2
Capacity Rated (Minimum~Maximum)	Cooling ❊1	Btu/h	6,000 (1,700 ~ 9,000)	9,000 (1,700 ~ 12,000)	12,000 (2,500 ~ 13,600)	15,000 (6,450 ~ 19,000)	17,200 (6,450 ~ 21,000)
	Heating 47 ❊1	Btu/h	8,700 (1,600 ~ 14,000)	10,900 (1,600 ~ 18,000)	13,600 (3,700 ~ 21,000)	18,000 (5,150 ~ 24,000)	20,300 (5,150 ~ 30,000)
Capacity Rated (Maximum)	Heating 17 ❊2	Btu/h	5,900 (10,700)	6,700 (12,200)	8,000(13,600)	11,000 (18,000)	13,700 (20,300)
Power consumption Rated (Minimum~Maximum)	Cooling ❊1	W	315 (100 ~ 560)	560 (100 ~ 1,000)	870 (170 ~ 1,150)	1,200 (410 ~ 2,200)	1,375 (410 ~ 2,220)
	Heating 47 ❊1	W	545 (110 ~ 1,270)	710 (110 ~ 1,470)	950 (280 ~ 2,300)	1,300 (430 ~ 3,360)	1,720 (430 ~ 3,390)
Power consumption Rated (Maximum)	Heating 17 ❊2	W	500 (1,000)	600 (1,440)	720 (1,900)	1,020 (2,480)	1,320 (2,800)
EER ❊1 [SEER] ❊3	Cooling		19.1 [33.1]	16.1 [30.5]	13.8 [26.1]	12.5 [22.0]	12.5 [21.0]
HSPF IV ❊4	Heating		**NA:** 13.5	**NA:** 13.5	**NA:** 12.5	**NA:** 12.0	**NA2:** 12.0
			NAH: 12.5	**NAH:** 12.5	**NAH:** 11.5	**NAH:** 11.0	**NAH2:** 11.0
COP	Heating ❊1		4.68	4.50	4.20	4.06	3.46
Power factor	Cooling (208/230)	%	80/81	90/90	97/97	97/97	93/93
	Heating (208/230)	%	87/88	94/94	96/96	97/97	96/96
Power supply	V , phase , Hz		208/230, 1 , 60				
Max. fuse size (time delay)		A	15			20	
Min. circuit ampacity		A	11			16	
Fan motor		F.L.A	0.50			0.93	
Compressor	Model		SNB092FQAMT		SNB140FQUMT	SNB172FQKMT	
		R.L.A	8.2			12.0	
		L.R.A	10.3			15.0	
	Refrigeration oil	fl oz. (L) (Model)	11.8 (0.35)/(FV50S)		11.8 (0.35)/(FV50S)	13.5(0.40)/(FV50S)	
Refrigerant control			Linear expansion valve				
Sound level ❊1	Cooling	dB(A)	47	48	49	51	52
	Heating	dB(A)	48	49	51	55	55
Defrost method			Reverse cycle				
Dimensions	W	in.	31-1/2			33-1/16	
	D	in.	11-1/4			13	
	H	in.	21-5/8			34-5/8	
Weight		lb.	81		83	124	
External finish			Munsell 3Y 7.8/1.1				
Remote controller			Wireless type				
Control voltage (by built-in transformer)		VDC	12 - 24				
Refrigerant piping			Not supplied				
Refrigerant pipe size (Min. wall thickness)	Liquid	in.	1/4 (0.0315)				
	Gas	in.	3/8 (0.0315)			1/2 (0.0315)	
Connection method	Indoor		Flared				
	Outdoor		Flared				
Between the indoor & outdoor units	Height difference	ft.	40			50	
	Piping length	ft.	65			100	
Refrigerant charge (R410A)			2 lb. 9 oz.			3 lb. 7 oz.	

NOTE: Test conditions are based on AHRI 210/240.

❊1: Rating conditions (Cooling) — Indoor: 80˚FDB, 67˚FWB, Outdoor: 95˚FDB, (75˚FWB)
(Heating) — Indoor: 70˚FDB, 60˚FWB, Outdoor: 47˚FDB, 43˚FWB

❊2: (Heating) — Indoor: 70˚FDB, 60˚FWB, Outdoor: 17˚FDB, 15˚FWB

Test condition

❊3,❊4

ARI	Mode	Test	Indoor air condition (°F)		Outdoor air condition (°F)	
			Dry bulb	Wet bulb	Dry bulb	Wet bulb
	SEER (Cooling)	"A-2" Cooling Steady State at rated compressor Speed	80	67	95	(75)
		"B-2" Cooling Steady State at rated compressor Speed	80	67	82	(65)
		"B-1" Cooling Steady State at minimum compressor Speed	80	67	82	(65)
		"F-1" Cooling Steady State at minimum compressor Speed	80	67	67	(53.5)
		"E-V" Cooling Steady State at Intermediate compressor Speed ❊5	80	67	87	(69)
	HSPF (Heating)	"H1-2" Heating Steady State at rated compressor Speed	70	60	47	43
		"H3-2" Heating at rated compressor Speed	70	60	17	15
		"H0-1" Heating Steady State at minimum compressor Speed	70	60	62	56.5
		"H1-1" Heating Steady State at minimum compressor Speed	70	60	47	43
		"H2-V" Heating at Intermediate compressor Speed ❊5	70	60	35	33

❊5: At Intermediate compressor Speed
= ("Rated compressor speed" - "minimum compressor speed") / 3 + "minimum compressor speed".

OPERATING RANGE

(1) POWER SUPPLY

	Rated voltage	Guaranteed voltage (V)
Outdoor unit	208/230 V 1 phase 60 Hz	Min. 187 — 208 — 230 — Max. 253

(2) OPERATION

Mode	Condition	Intake air temperature (°F)			
		Indoor		Outdoor	
		DB	WB	DB	WB
Cooling	Standard temperature	80	67	95	—
	Maximum temperature	90	73	115	—
	Minimum temperature	67	57	14	—
	Maximum humidity	78 %		—	
Heating	Standard temperature	70	60	47	43
	Maximum temperature	80	67	75	65
	Minimum temperature	70	60	-13	-14

MSZ-FE09NA MSZ-FE12NA

Indoor unit model			MSZ-FE09NA	MSZ-FE12NA
Power supply	V, phase, Hz		208/230 , 1 , 60	
Disconnect switch		A	15	
Min. circuit ampacity		A	1.0	
Fan motor		F.L.A	0.76	
Airflow Powerful - High - Med. - Low	COOL Dry (Wet)	CFM	381 - 339 - 226 - 162 (343 - 307 - 202 - 144)	410 - 381 - 226 - 162 (367 - 350 - 202 - 144)
	HEAT Dry	CFM	381 - 367 - 240 - 166	420 - 399 - 240 - 166
Moisture removal		pt./h	2.1	2.9
Sound level Powerful - High - Med. - Low	Cooling	dB(A)	42 - 39 - 31 - 22	45 - 43 - 33 - 22
	Heating	dB(A)	42 - 40 - 31 - 22	44 - 43 - 33 - 22
Cond. drain connection O.D.		in.	5/8	
Dimensions	W	in.	31-3/8	
	D		10-1/8	
	H		11-5/8	
Weight		lb.	27	
External finish			Munsell 1.0Y 9.2/0.2	
Remote controller			Wireless type	
Control voltage (by built-in transformer)			12 - 24 VDC	

NOTE: Test conditions are based on AHRI 210/240.

OUTLET AIR SPEED AND COVERAGE

Model	Mode	Function	Airflow (CFM)	Air speed (ft./s)	Coverage (ft.)
MSZ-FE09NA	HEAT	Dry	381	19.2	27.7
	COOL	Dry	339	17.1	24.7
		Wet	307	15.5	22.4
MSZ-FE12NA	HEAT	Dry	420	21.2	30.4
	COOL	Dry	381	19.2	27.7
		Wet	350	17.6	25.4

- The air coverage is the figure up to the position where the air speed is 1 ft./s, when air is blown out horizontally from the unit properly at the High speed position.
  The coverage should be used only as a general guideline since it varies according to the size of the room and furniture arranged inside the room.

MUZ-FE09NAH MUZ-FE12NAH

Outdoor unit model			MUZ-FE09NAH	MUZ-FE12NAH
Capacity Rated (Minimum~Maximum)	Cooling ❊1	Btu/h	9,000 (2,800~9,000)	12,000 (2,800~12,000)
	Heating 47 ❊1	Btu/h	10,900 (3,000~18,000)	13,600 (3,000~21,000)
Capacity Rated (Maximum)	Heating 17 ❊2	Btu/h	6,700 (12,500)	7,900(13,600)
Power consumption Rated (Minimum~Maximum)	Cooling ❊1	W	580 (160~650)	930 (160~960)
	Heating 47 ❊1	W	710 (150~2,250)	950 (150~2,250)
Power consumption Rated (Maximum)	Heating 17 ❊2	W	650 (1,730)	750(1,780)
EER ❊1 [SEER] ❊3	Cooling		15.5 [26.0]	12.9 [23.0]
HSPF IV ❊4	Heating		10.0	10.1
COP	Heating ❊1		4.50	4.20
Power factor	Cooling (208/230)	%	99/98	99/98
	Heating (208/230)	%	98/99	99/99
Power supply	V , phase , Hz		208/230, 1 , 60	
Max. fuse size (time delay)		A	15	
Min. circuit ampacity		A	12	
Fan motor		F.L.A	0.56	
Compressor	Model		SNB130FQBHT	
		R.L.A	8.6	
		L.R.A	10.8	
	Refrigeration oil	fl oz. (L) (Model)	15.2 (0.45)/(NEO22)	
Refrigerant control			Linear expansion valve	
Sound level ❊1	Cooling	dB(A)	48	48
	Heating	dB(A)	49	49
Defrost method			Reverse cycle	
Dimensions	W	in.	31-1/2	
	D	in.	11-1/4	
	H	in.	21-5/8	
Weight		lb.	80	
External finish			Munsell 3Y 7.8/1.1	
Remote controller			Wireless type	
Control voltage (by built-in transformer)		VDC	12 - 24	
Refrigerant piping			Not supplied	
Refrigerant pipe size (Min. wall thickness)	Liquid	in.	1/4 (0.0315)	
	Gas	in.	3/8 (0.0315)	
Connection method	Indoor		Flared	
	Outdoor		Flared	
Between the indoor & outdoor units	Height difference	ft.	40	
	Piping length	ft.	65	
Refrigerant charge (R410A)			2 lb. 9 oz.	

NOTE: Test conditions are based on AHRI 210/240.

❊1: Rating conditions (Cooling) — Indoor: 80˚FDB, 67˚FWB, Outdoor: 95˚FDB, (75˚FWB)
(Heating) — Indoor: 70˚FDB, 60˚FWB, Outdoor: 47˚FDB, 43˚FWB

❊2: (Heating) — Indoor: 70˚FDB, 60˚FWB, Outdoor: 17˚FDB, 15˚FWB

Test condition

❊3,❊4

ARI	Mode	Test	Indoor air condition (°F)		Outdoor air condition (°F)	
			Dry bulb	Wet bulb	Dry bulb	Wet bulb
	SEER (Cooling)	"A-2" Cooling Steady State at rated compressor Speed	80	67	95	(75)
		"B-2" Cooling Steady State at rated compressor Speed	80	67	82	(65)
		"B-1" Cooling Steady State at minimum compressor Speed	80	67	82	(65)
		"F-1" Cooling Steady State at minimum compressor Speed	80	67	67	(53.5)
		"E-V" Cooling Steady State at Intermediate compressor Speed ❊5	80	67	87	(69)
	HSPF (Heating)	"H1-2" Heating Steady State at rated compressor Speed	70	60	47	43
		"H3-2" Heating at rated compressor Speed	70	60	17	15
		"H0-1" Heating Steady State at minimum compressor Speed	70	60	62	56.5
		"H1-1" Heating Steady State at minimum compressor Speed	70	60	47	43
		"H2-V" Heating at Intermediate compressor Speed ❊5	70	60	35	33

❊5: At Intermediate compressor Speed
= ("Cooling rated compressor speed" - "minimum compressor speed") / 3 + "minimum compressor speed".

OPERATING RANGE

(1) POWER SUPPLY

	Rated voltage	Guaranteed voltage (V)
Outdoor unit	208/230 V 1 phase 60 Hz	Min. 187 — 208 — 230 — Max. 253

(2) OPERATION

Mode	Condition	Intake air temperature (°F)			
		Indoor		Outdoor	
		DB	WB	DB	WB
Cooling	Standard temperature	80	67	95	—
	Maximum temperature	90	73	115	—
	Minimum temperature	67	57	14	—
	Maximum humidity	78 %		—	
Heating	Standard temperature	70	60	47	43
	Maximum temperature	80	67	75	65
	Minimum temperature	70	60	-13	-15

MSZ-D30NA MSY-D30NA MSZ-D36NA MSY-D36NA

Indoor unit model			MSZ-D30NA	MSY-D30NA	MSZ-D36NA	MSY-D36NA
Power supply	V, phase, Hz		208/230 , 1 , 60			
Disconnect switch		A	15			
Min. circuit ampacity		A	1.0			
Fan motor		F.L.A	0.76			
Airflow Low - Med. - High - Powerful	COOL Dry (Wet)	CFM	389 - 639 - 848 - 887 (350 - 576 -763 - 798)			
	HEAT Dry		445 - 639 - 848 - 887	—	445 - 639 - 848 - 887	—
Moisture removal		pt./h	9.9		11.3	11.9
Sound level Low - Med. - High - Powerful	Cooling	dB(A)	32 - 42 - 49 -51			
	Heating		34 - 42 - 49 - 50	—	34 - 42 - 49 - 50	—
Cond. drain connection O.D.		in.	5/8			
Dimensions	W	in.	46-1/16			
	D		11-5/8			
	H		14-3/8			
Weight		lb.	40			
External finish			Munsell 1.0Y 9.2/0.2			
Remote controller			Wireless type			
Control voltage (by built-in transformer)			12-24 VDC			

NOTE : Test conditions are based on ARI 210/240.

OUTLET AIR SPEED AND COVERAGE RANGE

Model name	Mode	Function	Air low (CFM)	Air speed (ft./sec.)	Coverage range (ft.)
MSZ-D30NA MSZ-D36NA	HEAT	Dry	848	23.6	45.0
MSZ-D30NA MSZ-D36NA MSY-D30NA MSY-D36NA	COOL	Dry	848	23.6	45.0
		Wet	763	21.3	40.7

- The air coverage range is the figure up to the position where the air speed is 1 ft./sec., when air is blown out horizontally from the unit properly at the High speed position.
  The coverage range should be used only as a general guideline since it varies according to the size of the room and furniture arranged inside the room.

MUZ-D30NA MUY-D30NA MUZ-D36NA MUY-D36NA

Outdoor unit model			MUZ-D30NA	MUY-D30NA	MUZ-D36NA	MUY-D36NA
Capacity Rated (Minimum ~ Maximum)	Cooling ❊1	Btu/h	30,700 (9,800 ~ 30,700)	30,700 (9,800 ~ 30,700)	32,000/33,200 (9,800 ~ 32,000) / (9,800 ~ 33,200)	33,200/34,600 (9,800 ~ 33,200) / (9,800 ~ 34,600)
	Heating 47 ❊1		32,600 (8,700 ~ 34,000)	—	35,200 (8,700 ~ 36,000)	—
Capacity	Heating 17 ❊2	Btu/h	20,800	—	22,800	—
Power consumption Rated (Minimum ~ Maximum) (TOTAL)	Cooling ❊1	W	3,850 (620 ~ 3,850)	3,380 (620 ~ 3,380)	4,140/4,360 (620 ~ 4,140) / (620 ~ 4,360)	4,210/4,240 (620 ~ 4,210) / (620 ~ 4,240)
	Heating 47 ❊1		3,360 (520 ~ 3,600)	—	3,840 (520 ~ 4,100)	—
Power consumption	Heating 17 ❊2	W	2,620	—	3,000	—
EER ❊1 [SEER] ❊3	Cooling		8.0 [14.5]	9.1 [16.0]	7.7/7.6 [14.5]	7.9/8.2 [15.1]
HSPF IV(V) ❊4	Heating		8.2 (6.7)	—	8.2 (6.7)	—
COP	Heating ❊1		2.84	—	2.69	—
Power factor	Cooling (208/230)	%	99/99			
	Heating (**MUZ**) (208/230)	%	99/99			
Power supply	V , phase , Hz		208/230 , 1 , 60			
Max. fuse size (time delay)		A	25			
Min. circuit ampacity		A	21			
Fan motor		F.L.A	0.93			
Compressor	Model		TNB220FMCHT			
		R.L.A	16			
		L.R.A	20			
	Refrigeration oil	fl oz. (L) (Model)	29.4 (0.87)/(NEO22)			
Refrigerant control			Linear expansion valve			
Sound level ❊1	Cooling	dB(A)	55	55	56	56
	Heating		57	—	57	—
Defrost method			Reverse cycle	—	Reverse cycle	—
Dimensions	W	in.	33-1/16			
	D		13			
	H		33-7/16			
Weight		lb.	141	126	141	126
External finish			Munsell 3Y 7.8/1.1			
Remote controller			Wireless type			
Control voltage (by built-in transformer)			12 - 24 VDC			
Refrigerant piping			Not supplied			
Refrigerant pipe size (Min. wall thickness)	Liquid	in.	3/8 (0.0315)			
	Gas		5/8 (0.0394)			
Connection method	Indoor		Flared			
	Outdoor					
Between the indoor & outdoor units	Height difference	ft.	50			
	Piping length		100			
Refrigerant charge (R410A)			4 lb. 10 oz.	4 lb.	4 lb. 10 oz.	4 lb.

NOTE: Test conditions are based on ARI 210/240.

❊1: Rating conditions (Cooling) — Indoor: 80˚FDB, 67˚FWB, Outdoor: 95˚FDB, (75˚FWB) Rated frequency
(Heating) — Indoor: 70˚FDB, 60˚FWB, Outdoor: 47˚FDB, 43˚FWB Rated frequency

❊2: (Heating) — Indoor: 70˚FDB, 60˚FWB, Outdoor: 17˚FDB, 15˚FWB Maximum frequency

Test condition

※3,※4

ARI	Mode	Test	Indoor air condition (°F)		Outdoor air condition (°F)	
			Dry bulb	Wet bulb	Dry bulb	Wet bulb
	SEER (Cooling)	"A" Cooling Steady State at rated compressor Speed	80	67	95	(75)
		"B-2" Cooling Steady State at rated compressor Speed	80	67	82	(65)
		"B-1" Cooling Steady State at minimum compressor Speed	80	67	82	(65)
		Low ambient Cooling Steady State at minimum compressor Speed	80	67	67	(53.5)
		Intermediate Cooling Steady State at Intermediate compressor Speed ※5	80	67	87	(69)
	HSPF (Heating)	Standard Rating-Heating at rated compressor Speed	70	60	47	43
		Low temperature Heating at rated compressor Speed	70	60	17	15
		Max temperature Heating at minimum compressor Speed	70	60	62	56.5
		High temperature Heating at minimum compressor Speed	70	60	47	43
		Frost Accumulation at rated compressor Speed	70	60	35	33
		Frost Accumulation at Intermediate compressor Speed ※5	70	60	35	33

※5: At Intermediate compressor Speed
=("Cooling rated compressor speed" - "minimum compressor speed") / 3 + "minimum compressor speed".

OPERATING RANGE

(1) POWER SUPPLY

	Rated voltage	Guaranteed voltage (V)
Outdoor unit	208/230 V 1 phase 60 Hz	Min. 187 — 208 — 230 — Max. 253

(2) OPERATION

Mode	Condition	Intake air temperature (°F)			
		Indoor		Outdoor	
		DB	WB	DB	WB
Cooling	Standard temperature	80	67	95	—
	Maximum temperature	90	73	115	—
	Minimum temperature	67	57	14	—
	Maximum humidity	78%		—	
Heating	Standard temperature	70	60	47	43
	Maximum temperature	80	67	75	65
	Minimum temperature	70	60	14	13

SEZ-KD09NA4 SEZ-KD12NA4

Model Name			SEZ-KD09NA4		SEZ-KD12NA4	
Capacity			Cooling	Heating	Cooling	Heating
		BTU/h	8100	10900	11500	13600
Power source			208/230V (60Hz)		208/230V (60Hz)	
Power input		kW	0.06	0.04	0.07	0.05
Current		A	0.51	0.39	0.57	0.46
Temperature set range Remote controller		˚F(˚C)	67 to 86 (19 to 30)	63 to 83 (17 to 28)	67 to 86 (19 to 30)	63 to 83 (17 to 28)
Airflow direction			-		-	
Fan	Type x Quantity		Sirocco fan x 2		Sirocco fan x 2	
	External static press	in.WG(Pa)	0.02-0.06-0.14-0.20 (5-15-35-50)		0.02-0.06-0.14-0.20 (5-15-35-50)	
	Motor type		DC brushless motor		DC brushless motor	
	Motor output	kW	0.096		0.096	
	Driving mechanism		Direct-driven		Direct-driven	
	Airflow rate(Low-Mid-High)	m^3/min	5.5-7.0-9.0		7.0-9.0-11.0	
	Airflow rate(Low-Mid-High)	CFM	194-247-317		247-317-388	
	Airflow rate(Low-Mid-High)	L/S	91-116-150		116-150-183	
External finish			Galvanized		Galvanized	
External dimension H x W x D		mm	200 x 790 x 700		200 x 990 x 700	
		In.	7-7/8 x 31-1/8 x 27-9/16		7-7/8 x 39 x 27-9/16	
Net weight		kg	18		21	
Wiring	Min.size of wire	in.(mm)	1/8 (1.6)		1/8 (1.6)	
	Amperage of wire breaker	A	15		15	
Refrigerant piping diameter	Liquid R410A	in.(mm)	ø1/4 (ø6.35) Flare		ø1/4 (ø6.35) Flare	
	Gas R410A	in.(mm)	ø3/8 (ø9.52) Flare		ø3/8 (ø9.52) Flare	
Drain piping diameter		in.(mm)	O.D. 1-1/4 (32)		O.D. 1-1/4 (32)	
Sound level (Low-Mid-High) (measured in anechoic room)		dB<A>	23-26-30		23-28-33	
Insulation material			Polystyrene foam, Polyethylene foam, Urethane foam		Polystyrene foam, Polyethylene foam, Urethane foam	
Air filter			PP Honeycomb fabric (washable)		PP Honeycomb fabric (washable)	
Refrigerant control device			-		-	
Protection devices			Fuse (250V 6.3A)		Fuse (250V 6.3A)	
Heat exchanger			Cross fin (Aluminum fin and copper tube)		Cross fin (Aluminum fin and copper tube)	
Varistor			ERZV10D471		ERZV10D471	
Terminal block			To outdoor unit : 3P To wired remote controller : 2P		To outdoor unit : 3P To wired remote controller : 2P	
Power outlet		A	10		10	
Standard attachment	Document		Installation Manual, Instruction Book		Installation Manual, Instruction Book	
	Accessory		Drain hose (flexible joint), <Wired Remote Controller>		Drain hose (flexible joint), <Wired Remote Controller>	
Remark						
Note	1.Cooling/Heating capacity indicates the maximum value at operation under the following condition. <Cooling> Indoor:80˚FD.B. / 67˚FW.B. (26.7˚CD.B. / 19.4˚CW.B.) Outdoor:95˚FD.B. (35˚CD.B.) <Heating> Indoor:70˚FD.B. (21.1˚CD.B.) Outdoor:47˚FD.B. / 43˚FW.B. (8.3˚CD.B. / 6.1˚CW.B.) Pipe length:24-9/16ft (7.5m) Height difference:0ft (0m) 2.Power consumption. Run current at 0.06[in.WG] (15Pa) (external static pressure) 3.Cooling capacity value at 1:1system Heating capacity value at 1:1system 4. < > SEZ-KD・NA only					

SEZ-KD15NA4 SEZ-KD18NA4

Model Name			SEZ-KD15NA4		SEZ-KD18NA4	
Capacity			Cooling	Heating	Cooling	Heating
		BTU/h	14100	18000	17200	21600
Power source			208/230V (60Hz)		208/230V (60Hz)	
Power input		kW	0.09	0.07	0.09	0.07
Current		A	0.74	0.63	0.74	0.63
Temperature set range Remote controller		˚F(˚C)	67 to 86 (19 to 30)	63 to 83 (17 to 28)	67 to 86 (19 to 30)	63 to 83 (17 to 28)
Airflow direction			-		-	
Fan	Type x Quantity		Sirocco fan x 3		Sirocco fan x 4	
	External static press	in.WG(Pa)	0.02-0.06-0.14-0.20 (5-15-35-50)		0.02-0.06-0.14-0.20 (5-15-35-50)	
	Motor type		DC brushless motor		DC brushless motor	
	Motor output	kW	0.096		0.096	
	Driving mechanism		Direct-driven		Direct-driven	
	Airflow rate(Low-Mid-High)	m^3/min	10.0-12.5-15.0		12.0-15.0-18.0	
	Airflow rate(Low-Mid-High)	CFM	353-441-529		423-529-635	
	Airflow rate(Low-Mid-High)	L/S	167-208-250		200-250-300	
External finish			Galvanized		Galvanized	
External dimension H x W x D		mm	200 x 990 x 700		200 x 1190 x 700	
		In.	7-7/8 x 39 x 27-9/16		7-7/8 x 46-7/8 x 27-9/16	
Net weight		kg	23		27	
Wiring	Min.size of wire	in.(mm)	1/8 (1.6)		1/8 (1.6)	
	Amperage of wire breaker	A	15		15	
Refrigerant piping diameter	Liquid R410A	in.(mm)	ø1/4 (ø6.35) Flare		ø1/4 (ø6.35) Flare	
	Gas R410A	in.(mm)	ø1/2 (ø12.7) Flare		ø1/2 (ø12.7) Flare	
Drain piping diameter		in.(mm)	O.D. 1-1/4 (32)		O.D. 1-1/4 (32)	
Sound level (Low-Mid-High) (measured in anechoic room)		dB<A>	30-34-37		30-34-38	
Insulation material			Polystyrene foam, Polyethylene foam, Urethane foam		Polystyrene foam, Polyethylene foam, Urethane foam	
Air filter			PP Honeycomb fabric (washable)		PP Honeycomb fabric (washable)	
Refrigerant control device			-		-	
Protection devices			Fuse (250V 6.3A)		Fuse (250V 6.3A)	
Heat exchanger			Cross fin (Aluminum fin and copper tube)		Cross fin (Aluminum fin and copper tube)	
Varistor			ERZV10D471		ERZV10D471	
Terminal block			To outdoor unit : 3P To wired remote controller : 2P		To outdoor unit : 3P To wired remote controller : 2P	
Power outlet		A	20		20	
Standard attachment	Document		Installation Manual, Instruction Book		Installation Manual, Instruction Book	
	Accessory		Drain hose (flexible joint), <Wired Remote Controller>		Drain hose (flexible joint), <Wired Remote Controller>	
Remark						
Note	1.Cooling/Heating capacity indicates the maximum value at operation under the following condition. <Cooling> Indoor:80˚FD.B. / 67˚FW.B. (26.7˚CD.B. / 19.4˚CW.B.) Outdoor:95˚FD.B. (35˚CD.B.) <Heating> Indoor:70˚FD.B. (21.1˚CD.B.) Outdoor:47˚FD.B. / 43˚FW.B. (8.3˚CD.B. / 6.1˚CW.B.) Pipe length:24-9/16ft (7.5m) Height difference:0ft (0m) 2.Power consumption. Run current at 0.06[in.WG] (15Pa) (external static pressure) 3.Cooling capacity value at 1:1system Heating capacity value at 1:1system 4. < > SEZ-KD・NA only					

SUZ-KA09NA SUZ-KA12NA SUZ-KA15NA SUZ-KA18NA (SEZ Combination)

Model name	Indoor unit		**SEZ-KD09NA4**	**SEZ-KD12NA4**	**SEZ-KD15NA4**	**SEZ-KD18NA4**
	Outdoor unit		**SUZ-KA09NA**	**SUZ-KA12NA**	**SUZ-KA15NA**	**SUZ-KA18NA**
Cooling	Max. Capacity	Btu/h	10,900	13,300	17,000	19,000
	Rated Capacity	Btu/h	8,100	11,500	14,100	17,200
	Min. Capacity	Btu/h	3,800	3,800	3,800	3,800
	Total input	W	670	920	1,170	1,380
	EER	Btu/h	12	12.5	12	12.5
	SEER	Btu/h	15	16	15.5	17.5
	Moisture Removal	Pints/h	1.5	2.4	2.6	3.4
	SHF		0.80	0.76	0.80	0.79
Heating	Max. Capacity	Btu/h	14,100	16,400	21,100	24,900
	Rated Capacity	Btu/h	10,900	13,600	18,000	21,600
	Min. Capacity	Btu/h	4,800	4,800	4,800	4,800
	Total input	W	1,020	1,140	1,500	1,700
	COP	W/W	3.13	3.50	3.52	3.72
	HSPF(IV)	Btu/h/W	10.0	10.0	10.0	10.0
Heating at low ambient	Capacity	Btu/h	7,300	9,800	13,700	15,000
	Total input	W	1,000	1,180	1,650	1,830
	COP	W/W	2.14	2.43	2.43	2.40
Power factor	Cooling (208/230)	%				
	Heating (208/230)	%				
Power supply	Phase,Cycle,Voltage		1phase, 60Hz, 208/230V			
	Breaker size	A	15			
Voltage	Indoor - Outdoor S1-S2		AC208 / 230V			
	Indoor - Outdoor S2-S3		DC 12 - 24V			
	Indoor - Remote controller		DC 12V			
Indoor unit	MCA	A	1			
	MOCP	A	15			
	Fan Motor	F.L.A	0.51	0.57	0.74	
	Fan Motor Output	W	96			
	Air flow (Lo-Mid-Hi) DRY	CMM	5.5 - 7 - 9	7 - 9 - 11	10 - 12.5 - 15	12 - 15 - 18
	Air flow (Lo-Mid-Hi) WET	CMM	4.9 - 6 - 8	6 - 8 - 10	9 - 11.2 - 14	11 - 14 - 17
	Air flow (Lo-Mid-Hi) DRY	CFM	194 - 247 - 317	247 - 317 - 388	353 - 441 - 529	423 - 529 - 635
	Air flow (Lo-Mid-Hi) WET	CFM	174 - 222 - 285	222 - 285 - 349	317 - 396 - 476	381 - 476 - 572
	External pressure	in.WG [Pa]	0.02 / 0.06 / 0.14 / 0.20 [5/15/35/50]			
	Sound level(Lo-Mid-Hi)	dB (A)	23 - 26 - 30	23 - 28 - 33	30 - 34 - 37	30 - 34 - 38
	External finish		Galvanized			
	Dimension Unit (Panel)	W: mm [inch]	790 [31-1/8]	990 [39]		1190 [46-7/8]
		D: mm [inch]	700 [27-9/16]			
		H: mm [inch]	200 [7-7/8]			
	Weight Unit	kg	19	22	24	28
		lbs	42	50	54	62
	Field Drain pipe seize O.D.	mm [inch]	32 [1-1/4]			
Remote Controller			Optional parts			
Outdoor unit	MCA	A	12			14
	MOCP	A	15			
	Fan Motor	F.L.A.	0.50			0.93
	Fan Motor Output	W	55			77
	Compressor		KNB073FQDHC	KNB092FQAHC	SNB130FQBH	
		R.L.A.	6.6		7.4	10
		L.R.A.	8.2		9.3	12.5
	Air flow (Cooling/Heating)	CMM	32.6 / 34.7	34.8 / 33.2	35.2 / 34.8	49 / 47
		CFM	1,151 / 1,225	1,229 / 1,172	1,243 / 1,229	1,730 / 1,659
	Refrigerant Control		Linear Expansion Valve			
	Defrost Method		Reverse Cycle			
	Sound level at cooling	dB (A)	46	49	49	54
	Sound level at heating	dB (A)	50	51	51	56
	External finish		Ivory Munsell 3Y 7.8/1.1			
	Dimension	W: mm [inch]	800 [31-1/2]			840 [33-1/16]
		D: mm [inch]	285 [11-1/4]			330 [13]
		H: mm [inch]	550 [21-5/8]			850 [33-7/16]
	Weight	kg [lbs]	30 [66]	35 [77]	36 [80]	54 [119]
Refrigerant	Type		R410A			
	Charge	kg [lbs,oz]	0.9 [1 lb 16 oz]	1.15 [2 lb 9 oz]		1.80 [3 lb 16 oz]
	Oil	L [fl oz]	0.32 (NEO 22) [10.8]		0.45 (NEO 22) [15.2]	
Refrigerant pipe size	Gas side O.D.	mm [inch]	9.52 [3/8]		12.7 [1/2]	
	Liquid side O.D.	mm [inch]	6.35 [1/4]			
Refrigerant pipe length	Height difference		Max. 12 m [Max. 40 ft]			Max. 15 m [Max. 50 ft]
	Length		Max. 20 m [Max. 65 ft]			Max. 30 m [Max. 100 ft]
Refrigerant Piping			Not Supplied			
Connection Method			Flared			

NOTES : *1.Rating conditions (cooling)-Indoor : D.B. 26.7°C(80°F), W.B. 19.4°C(67°F) Outdoor : D.B. 35°C(95°F), W.B. 23.9°C(75°F)
(heating)-Indoor : D.B. 21.1°C(70°F), W.B. 15.6°C(60°F) Outdoor : D.B. 8.3°C(47°F), W.B. 6.1°C(43°F)
*2.Rating conditions(heating)-Indoor : D.B. 21.1°C(70°F), W.B. 15.6°C(60°F) Outdoor : D.B. -8.3°C(17°F), W.B. -9.4°C(15°F)

Operating range

		Indoor intake air temperature	Outdoor intake air temperature
Cooling	Maximum	D.B. 35°C(95°F), W.B. 21.7°C(71°F)	D.B. 46°C(115°F)
	Minimum	D.B. 19.4°C(67°F), W.B. 13.9°C(57°F)	D.B. -10°C(14°F)
Heating	Maximum	D.B. 26.7°C(80°F), W.B. 19.4°C(67°F)	D.B. 24°C(75°F), W.B. 18°C(65°F)
	Minimum	D.B. 21.1°C(70°F), W.B. 15.6°C(60°F)	D.B. -20°C(-4°F), W.B. -21°C(-5°F)

SLZ-KA09NA SLZ-KA12NA SLZ-KA15NA

Indoor unit model			SLZ-KA09NA	SLZ-KA12NA	SLZ-KA15NA
Power supply		V, phase, Hz	208/230, 1, 60		
Max. fuse size (time delay)/Disconnect switch		A	15		
Min. circuit ampacity		A	1.0		
Fan motor		F.L.A	0.23	0.28	0.28
Airflow (Low - Med. - High)	Dry	CFM	280-320-350	280-320-390	280-320-390
	Wet	CFM	250-290-320	250-290-350	250-290-350
Moisture removal		pt/h	1.2	2.3	4.5
Sound pressure level (Low - Med. - High)		dB(A)	29-32-38	30-34-39	31-35-40
External finish color			Unit: Galvanized sheets with gray heat insulation Grille: ABS resin Munsell 6.4Y 8.9/0.4		
Dimensions unit <Grille>	W	in.	22-7/16 <25-19/32>		
	D	in.	22-7/16 <25-19/32>		
	H	in.	8-3/16 <25/32>		
Weight unit <Grille>		lb.	36 <7>		
Field drainpipe O.D.		in.	1-1/4		
Control voltage (by buit-in transformer)			12 - 24 VDC		

NOTE : Test conditions are based on AHRI 210/240.

OUTLET AIR SPEED AND COVERAGE

Model	Function	Airflow (CFM)	Air speed (ft./s.)	Coverage (ft.)
SLZ-KA09NA	Dry	350	11.2	12.1
	Wet	320	10.2	11.1
SLZ-KA12NA	Dry	390	12.1	13.5
	Wet	350	10.9	12.1
SLZ-KA15NA	Dry	390	12.1	13.5
	Wet	350	10.9	12.1

- The air coverage is the figure up to the position where the air speed is 1 ft./s., when air is blown out horizontally from the unit properly at the High speed position.
  The coverage should be used only as a general guideline since it varies according to the size of the room and furniture arranged inside the room.

SUZ-KA09NA SUZ-KA12NA SUZ-KA15NA (SLZ Combination)

Model name	Indoor unit		SLZ-KA09NA	SLZ-KA12NA	SLZ-KA15NA
	Outdoor unit		SUZ-KA09NA	SUZ-KA12NA	SUZ-KA15NA
Cooling	Max. Capacity	Btu/h	10,900	13,300	17,700
	Rated Capacity	Btu/h	8,400	11,100	15,000
	Min. Capacity	Btu/h	3,100	3,400	3,800
	Total input	W	700	920	1,460
	EER	Btu/h	12	12	10.2
	SEER	Btu/h	15	15.4	16
	Moisture Removal	Pints/h	1.2	2.3	4.5
*1	SHF		0.84	0.77	0.67
Heating	Max. Capacity	Btu/h	14,100	17,100	22,200
	Rated Capacity	Btu/h	10,900	13,600	18,000
	Min. Capacity	Btu/h	3,100	3,100	3,100
	Total input	W	930	1,180	1,950
	COP	W/W	3.44	3.38	2.71
*1	HSPF(IV)	Btu/h/W	9.6	9.6	9.6
Heating at low ambient	Capacity	Btu/h	8,300	10,200	13,400
	Total input	W	1,040	1,310	1,970
*2	COP	W/W	2.33	2.28	1.99
Power factor	Cooling (208/230)	%			
	Heating (208/230)	%			
Power supply	Phase,Cycle,Voltage		1phase, 60Hz, 208/230V		
	Breaker size	A	15		
Voltage	Indoor - Outdoor S1-S2		AC208 / 230V		
	Indoor - Outdoor S2-S3		DC 12 - 24V		
	Indoor - Remote controller		DC 12V		
Indoor unit	MCA	A	1		
	MOCP	A	15		
	Fan Motor	F.L.A	0.23	0.28	0.28
	Fan Motor Output	W	15	20	20
	Air flow DRY	CMM	8 - 9 - 10	8 - 9 - 11	8 - 9 - 11
	(Lo-Mid-Hi) WET	CMM	7 - 8 - 9	7 - 8 - 10	7 - 8 - 10
	Air flow DRY	CFM	280 - 320 - 350	280 - 320 - 390	280 - 320 - 390
	(Lo-Mid-Hi) WET	CFM	250 - 290 - 320	250 - 290 - 350	250 - 290 - 350
	Sound level (Lo-Mid-Hi)	dB (A)	29 - 32 - 38	30 - 34 - 39	31 - 35 - 40
	External finish		Unit: Galvanized sheets with gray heat insulation Grille: ABS resin Munsell 6.4Y 8.9/0.4		
	Dimension	W:mm [inch]	570 <650> [22-7/16 <25-19/32>]		
	Unit <Grille>	D:mm [inch]	570 <650> [22-7/16 <25-19/32>]		
		H:mm [inch]	235 <20> [9-1/4 <25/32>]		
	Weight	kg	16.5 <3>		
	Unit <Grille>	lbs	36 <7>		
	Field Drain pipe seize O.D.	mm [inch]	32 [1-1/4]		
Remote Controller			Optional parts		
Outdoor unit	MCA	A	12		
	MOCP	A	15		
	Fan Motor	F.L.A.	0.50		
	Fan Motor Output	W	55		
	Compressor		KNB073FQDHC	KNB092FQAHC	SNB130FQBH
		R.L.A.	6.6		7.4
		L.R.A.	8.2		9.3
	Air flow	CMM	32.6 / 34.7	34.8 / 33.2	35.2 / 34.8
	(Cooling/Heating)	CFM	1,151 / 1,225	1,229 / 1,172	1,243 / 1,229
	Refrigerant Control		Linear Expansion Valve		
	Defrost Method		Reverse Cycle		
	Sound level at cooling	dB (A)	46	49	49
	Sound level at heating	dB (A)	50	51	51
	External finish		Ivory Munsell 3Y 7.8/1.1		
	Dimension	W:mm [inch]	800 [31-1/2]		
		D:mm [inch]	285 [11-1/4]		
		H:mm [inch]	550 [21-5/8]		
	Weight	kg [lbs]	30 [66]	35 [77]	36 [80]
Refrigerant	Type		R410A		
	Charge	kg [lbs,oz]	0.9 [1 lb 16 oz]	1.15 [2 lb 9 oz]	
	Oil	L [fl oz]	0.32 (NEO 22) [10.8]		0.45 (NEO 22) [15.2]
Refrigerant pipe size	Gas side O.D.	mm [inch]	9.52 [3/8]		12.7 [1/2]
	Liquid side O.D.	mm [inch]	6.35 [1/4]		
Refrigerant pipe length	Height difference		Max. 12 m [Max. 40 ft]		
	Length		Max. 20 m [Max. 65 ft]		
Refrigerant Piping			Not Supplied		
Connection Method			Flared		

NOTES : *1.Rating conditions (cooling)-Indoor : D.B. 26.7℃(80°F), W.B. 19.4℃(67°F) Outdoor : D.B. 35℃(95°F), W.B. 23.9℃(75°F)
(heating)-Indoor : D.B. 21.1℃(70°F), W.B. 15.6℃(60°F) Outdoor : D.B. 8.3℃(47°F), W.B. 6.1℃(43°F)
*2.Rating conditions(heating)-Indoor : D.B. 21.1℃(70°F), W.B. 15.6℃(60°F) Outdoor : D.B. -8.3℃(17°F), W.B. -9.4℃(15°F)

Operating range

		Indoor intake air temperature	Outdoor intake air temperature
Cooling	Maximum	D.B. 35℃(95°F), W.B. 21.7℃(71°F)	D.B. 46℃(115°F)
	Minimum	D.B. 19.4℃(67°F), W.B. 13.9℃(57°F)	D.B. -10℃(14°F)
Heating	Maximum	D.B. 26.7℃(80°F), W.B. 19.4℃(67°F)	D.B. 24℃(75°F), W.B. 18℃(65°F)
	Minimum	D.B. 21.1℃(70°F), W.B. 15.6℃(60°F)	D.B. -20℃(-4°F), W.B. -21℃(-5°F)

PEAD-A09AA7 PEAD-A12AA7

INDOOR UNIT	Service Ref.			**PEAD-A09AA7**
	Power supply (phase, cycle, voltage)			1 phase, 60Hz, 208/230V
		Max. Fuse Size	A	15
		Min. Circuit Ampacity	A	1.45
	External finish			Galvanized sheets
	Heat exchanger			Plate fin coil
	Fan	Fan (drive) × No.		Sirocco fan × 1
		Fan motor output	kW	0.085
		Fan motor	F.L.A	1.16
		Air flow (Low-Mid-High)	m^3/min (CFM)	8.0-9.0-10.0 (282-318-353)
		External static pressure	Pa (in.WG)	35-50-70-100-150 (0.14-0.20-0.28-0.40-0.60)
	Operation control & Thermostat			Remote controller & built-in
	Sound pressure level (Low-Mid-High)	35Pa (0.14 in.WG)	dB (A)	23-25-27
		50Pa (0.20 in.WG)		24-26-28
		70Pa (0.28 in.WG)		27-29-31
		100Pa (0.40 in.WG)		29-32-35
		150Pa (0.60 in.WG)		32-35-39
	Field drain pipe O.D		mm (in.)	32 (1-1/4)
	Dimensions	W	mm (in.)	900 (35-7/16)
		D	mm (in.)	732 (28-7/8)
		H	mm (in.)	250 (9-7/8)
	Weight		kg (lbs)	26 (58)

INDOOR UNIT	Service Ref.			**PEAD-A12AA7**
	Power supply (phase, cycle, voltage)			1 phase, 60Hz, 208/230V
		Max. Fuse Size	A	15
		Min. Circuit Ampacity	A	1.45
	External finish			Galvanized sheets
	Heat exchanger			Plate fin coil
	Fan	Fan (drive) × No.		Sirocco fan × 1
		Fan motor output	kW	0.085
		Fan motor	F.L.A	1.16
		Air flow (Low-Mid-High)	m^3/min (CFM)	10.0-12.0-14.0 (353-424-494)
		External static pressure	Pa (in.WG)	35-50-70-100-150 (0.14-0.20-0.28-0.40-0.60)
	Operation control & Thermostat			Remote controller & built-in
	Sound pressure level (Low-Mid-High)	35Pa (0.14 in.WG)	dB (A)	28-30-34
		50Pa (0.20 in.WG)		28-30-34
		70Pa (0.28 in.WG)		29-32-36
		100Pa (0.40 in.WG)		29-33-37
		150Pa (0.60 in.WG)		32-36-40
	Field drain pipe O.D		mm (in.)	32 (1-1/4)
	Dimensions	W	mm (in.)	900 (35-7/16)
		D	mm (in.)	732 (28-7/8)
		H	mm (in.)	250 (9-7/8)
	Weight		kg (lbs)	26 (58)

PEAD-A15AA7 PEAD-A18AA7

INDOOR UNIT	Service Ref.			PEAD-A15AA7
	Power supply (phase, cycle, voltage)			1 phase, 60Hz, 208/230V
		Max. Fuse Size	A	15
		Min. Circuit Ampacity	A	1.69
	External finish			Galvanized sheets
	Heat exchanger			Plate fin coil
	Fan	Fan (drive) × No.		Sirocco fan × 1
		Fan motor output	kW	0.085
		Fan motor	F.L.A	1.35
		Air flow (Low-Mid-High)	m^3/min (CFM)	12.0-14.5-17.0 (424-512-600)
		External static pressure	Pa (in.WG)	35-50-70-100-150 (0.14-0.20-0.28-0.40-0.60)
	Operation control & Thermostat			Remote controller & built-in
	Sound pressure level (Low-Mid-High)	35Pa (0.14 in.WG)	dB (A)	29-32-36
		50Pa (0.20 in.WG)		30-33-37
		70Pa (0.28 in.WG)		30-34-38
		100Pa (0.40 in.WG)		31-35-39
		150Pa (0.60 in.WG)		33-38-42
	Field drain pipe O.D		mm (in.)	32 (1-1/4)
	Dimensions	W	mm (in.)	900 (35-7/16)
		D	mm (in.)	732 (28-7/8)
		H	mm (in.)	250 (9-7/8)
	Weight		kg (lbs)	28 (62)

INDOOR UNIT	Service Ref.			PEAD-A18AA7
	Power supply (phase, cycle, voltage)			1 phase, 60Hz, 208/230V
		Max. Fuse Size	A	15
		Min. Circuit Ampacity	A	1.69
	External finish			Galvanized sheets
	Heat exchanger			Plate fin coil
	Fan	Fan (drive) × No.		Sirocco fan × 1
		Fan motor output	kW	0.085
		Fan motor	F.L.A	1.35
		Air flow (Low-Mid-High)	m^3/min (CFM)	12.0-14.5-17.0 (424-512-600)
		External static pressure	Pa (in.WG)	35-50-70-100-150 (0.14-0.20-0.28-0.40-0.60)
	Operation control & Thermostat			Remote controller & built-in
	Sound pressure level (Low-Mid-High)	35Pa (0.14 in.WG)	dB (A)	29-32-36
		50Pa (0.20 in.WG)		30-33-37
		70Pa (0.28 in.WG)		30-34-38
		100Pa (0.40 in.WG)		31-35-39
		150Pa (0.60 in.WG)		33-38-42
	Field drain pipe O.D		mm (in.)	32 (1-1/4)
	Dimensions	W	mm (in.)	900 (35-7/16)
		D	mm (in.)	732 (28-7/8)
		H	mm (in.)	250 (9-7/8)
	Weight		kg (lbs)	28 (62)

SVZ-KP12NA SVZ-KP18NA

			Small Cabinet	
Item / Model			**SVZ-KP12NA**	**SVZ-KP18NA**
Power Source			208/230V, 1-phase, 60hZ	
Cooling capacity/ Heating capacity	Btu/h	Btu/h	12,000/13,500	18,000/22,900
	kW	kW	3.5/4.0	5.3/6.7
Tonnage			1	1.5
Dimensions	Height	mm [in]	1,011 [39-13/16]	
	Width	mm [in]	432 [17]	
	Depth	mm [in]	548 [21-5/8]	
Net weight		kg [lb]	42 [93]	
Fan	Airflow rate (Low-Mid-High)	CFM	278 - 381 - 448	471 - 573 - 675
	External static pressure	in. WG	0.30 - 0.50 - 0.80	
		[Pa]	[75 - 125 - 200]	
Sound Pressure (Low - Mid - High)		dB(A)	TBD	TBD

Notes:

1. Rating conditions (cooling)
   Indoor : 80 °F [26.7 °C] D.B., 67 °F [19.4 °C] W.B.
   Outdoor : 95 °F [35 °C] D.B.
2. Rating conditions (heating)
   Indoor : 70 °F [21.1 °C] D.B.
   Outdoor : 47 °F [8.3 °C] D.B., 43 °F [6.1 °C] W.B.
3. The indicated capacity is the value when one indoor unit is connected to the outdoor unit.
4. Specifications subject to change without notice.
5. The external static pressure is set to 0.50 in. WG (125 Pa) at factory shipment.

SUZ-KA09NA SUZ-KA12NA SUZ-KA15NA SUZ-KA18NA (PEAD Combination)

Model name	Indoor Unit		PEAD-A09AA7	PEAD-A12AA7	PEAD-A15AA7	PEAD-A18AA7
	Outdoor Unit		SUZ-KA09NAR1	SUZ-KA12NAR1	SUZ-KA15NAR1	SUZ-KA18NAR1
Cooling	Rated Capacity	Btu/h	9000	12000	15000	18000
	Capacity Range	Btu/h	3800-9000	5200-12000	6300-15000	7500-18000
	Total Input	W	720	950	1200	1440
	Energy Efficiency	EER	12.5	12.6	12.5	12.5
		SEER	19.4	18.6	18.6	18.8
	Moisture Removal	Pints/h	0.8	1.7	1.5	3.2
	Sensible Heat Factor		0.90	0.84	0.89	0.80
Heating at 47F	Rated Capacity	Btu/h	11400	16300	21000	24700
	Capacity Range	Btu/h	4300-11400	5700-16300	7700-21000	10900-24700
	Total Input	W	900	1240	1780	2200
	HSPF(Region IV)	Btu/h/W	11.5	10.9	12.1	11.5
Heating at 17F	Rated Capacity	Btu/h	6400	8200	13800	14000
	Rated Total Input	W	720	900	1410	1650
	Maximum Capacity	Btu/h	6400	8200	13800	14000
	Maximum Total Input	W	720	900	1410	1650
Power Supply	Phase,Cycle,Voltage		1-phase, 60Hz, 208/230V			
Voltage	Indoor-Outdoor S1-S2		AC 208/230V			
	Indoor-Outdoor S2-S3		DC12-24V			
	Indoor-Remote controller		DC12V			
Indoor Unit	MCA	A	1.45		1.69	
	Fan Motor	F.L.A.	1.16		1.35	
	Fan Motor Output	W	85			
	Air flow (Lo-Mid-Hi)	DRY(CFM)	282-318-353	353-424-494	424-512-600	424-512-600
		WET(CFM)	254-286-318	318-382-445	382-461-540	382-461-540
	External Static Pressure	In. WG	0.14-0.20-0.28-0.40-0.60			
	Sound Pressure Level (Lo-Mid-Hi)	dB(A)	24-26-28	28-30-34	30-33-37	
	External Finish Color		Galvanized sheets			
	Dimensions	W: In.	35-7/16			
		D: In.	28-7/8			
		H: In.	9-7/8			
	Weight Unit	Lbs	58		62	
	Field Drainpipe O.D.	In.	O.D. 1-1/4			
	Refrigerant pipe Gas	In.	3/8	1/2		
	Refrigerant pipe Liquid	In.	1/4			
Outdoor Unit	MCA	A	12			14
	MOCP	A	15			
	Fan Motor	F.L.A	0.50			0.93
	Compressor	Model(Type)	DC INVERTER-driven		DC INVERTER-driven Twin Rotary	
		R.L.A	6.6		7.4	10
		L.R.A	8.2		9.3	12.5
	Airflow(Cooling/Heating)	CFM	(1,151/1,225)	(1,229/1,172)	(1,243/1,229)	(1,730/1,659)
	Refrigerant Control		Linear Expansion Valve			
	Defrost Method		Reverse Cycle			
	SPL(Cooling)	dB(A)	46	49		54
	SPL(Heating)	dB(A)	50	51		56
	External Finish Color		Munsell No.3Y 7.8/1.1			
	Dimensions	W: In.	31-1/2			33-1/16
		D: In.	11-1/4			13
		H: In.	21-5/8			33-7/16
	Weight	Lbs.	66	77	80	119
Remote Controller	Type		Wired Remote Controller			
Refrigerant	Type		R410A			
	Charge	Lbs,Oz	1,16	2,9		3,16
	Oil	Type(Fl.Oz.)	NEO22(10.8)		NEO22(15.2)	
Refrigerant Pipe	Gas Side O.D.	In.	3/8		1/2	
	Liquid Side O.D		1/4			
	Height Difference (Max)	Ft	40			50
	Length (Max.)		65			100
Connection Method	Indoor/Outdoor		Flared/Flared			
Operation Guarantee	Cooling	°F	14 - 115			
	Heating		12 - 75			

NOTES : *1.Rating conditions (cooling)-Indoor : D.B. 26.7°C(80°F), W.B. 19.4°C(67°F) Outdoor : D.B. 35°C(95°F), W.B. 23.9°C(75°F)
(heating)-Indoor : D.B. 21.1°C(70°F), W.B. 15.6°C(60°F) Outdoor : D.B. 8.3°C(47°F), W.B. 6.1°C(43°F)
*2.Rating conditions(heating)-Indoor : D.B. 21.1°C(70°F), W.B. 15.6°C(60°F) Outdoor : D.B. -8.3°C(17°F), W.B. -9.4°C(15°F)

Operating range

		Indoor intake air temperature	Outdoor intake air temperature
Cooling	Maximum	D.B. 35°C(95°F), W.B. 21.7°C(71°F)	D.B. 46°C(115°F)
	Minimum	D.B. 19.4°C(67°F), W.B. 13.9°C(57°F)	D.B. -10°C(14°F)
Heating	Maximum	D.B. 26.7°C(80°F), W.B. 19.4°C(67°F)	D.B. 24°C(75°F), W.B. 18°C(65°F)
	Minimum	D.B. 21.1°C(70°F), W.B. 15.6°C(60°F)	D.B. -20°C(-4°F), W.B. -21°C(-5°F)

SUZ-KA12NA SUZ-KA18NA (SVZ Combination)

Model name	Indoor Unit		SVZ-KP12NA	SVZ-KP18NA
	Outdoor Unit		SUZ-KA12NAR1	SUZ-KA18NAR1
Cooling	Rated Capacity	Btu/h	12000	18000
	Capacity Range	Btu/h	3700-12000	4300-18000
	Total Input	W	960	1440
	Energy Efficiency	EER	12.5	12.5
		SEER	17.0	17.6
	Moisture Removal	Pints/h	1.8	2.3
	Sensible Heat Factor		0.83	0.86
Heating at 47F	Rated Capacity	Btu/h	13500	22900
	Capacity Range	Btu/h	5000-13500	7700-22900
	Total Input	W	1210	1890
	HSPF(Region IV)	Btu/h/W	10.0	10.4
Heating at 17F	Rated Capacity	Btu/h	8800	11600
	Rated Total Input	W	1060	1470
	Maximum Capacity	Btu/h	8800	11600
	Maximum Total Input	W	1060	1470
Power Supply	Phase,Cycle,Voltage		1-phase, 60Hz, 208/230V	
Voltage	Indoor-Outdoor S1-S2		AC 208/230V	
	Indoor-Outdoor S2-S3		DC12-24V	
	Indoor-Remote controller		DC12V	
Indoor Unit	MCA	A	3	
	Fan Motor	F.L.A.	2.4	
	Fan Motor Output	W	121	
	Air flow (Lo-Mid-Hi)	DRY(CFM)	278-381-448	471-573-675
		WET(CFM)	278-381-448	471-573-675
	External Static Pressure	In. WG	0.3 - 0.5 - 0.8	
	Sound Pressure Level (Lo-Mid-Hi)	dB(A)	29-36-39	33-36-41
	External Finish Color		BLACK	BLACK
	Dimensions	W: In.	17	
		D: In.	21-5/8	
		H: In.	39-13/16	
	Weight Unit	Lbs	93	
	Field Drainpipe O.D.	In.	O.D. 3/4	
	Refrigerant pipe Gas	In.	3/8	1/2
	Refrigerant pipe Liquid	In.	1/4	
Outdoor Unit	MCA	A	12	14
	MOCP	A	15	15
	Fan Motor	F.L.A	0.50	0.93
	Compressor	Model(Type)	DC INVERTER-driven	DC INVERTER-driven Twin Rotary
		R.L.A	6.6	10
		L.R.A	8.2	12.5
	Airflow(Cooling/Heating)	CFM	(1,229/1,172)	(1,730/1,659)
	Refrigerant Control		Linear Expansion Valve	
	Defrost Method		Reverse Cycle	
	SPL(Cooling)	dB(A)	49	54
	SPL(Heating)	dB(A)	51	56
	External Finish Color		Munsell No.3Y 7.8/1.1	
	Dimensions	W: In.	31-1/2	33-1/16
		D: In.	11-1/4	13
		H: In.	21-5/8	33-7/16
	Weight	Lbs.	77	119
Remote Controller	Type		Wired Remote Controller	
Refrigerant	Type		R410A	
	Charge	Lbs,Oz	2,9	3,16
	Oil	Type(Fl.Oz.)	NEO22(10.8)	NEO22(15.2)
Refrigerant Pipe	Gas Side O.D.	In.	3/8	1/2
	Liquid Side O.D		1/4	
	Height Difference (Max)	Ft	40	50
	Length (Max.)		65	100
Connection Method	Indoor/Outdoor		Flared/Flared	
Operation Guarantee	Cooling	°F	14 - 115	
	Heating		12 - 75	

MFZ-KJ09NA MFZ-KJ12NA MFZ-KJ15NA MFZ-KJ18NA

1. Single connection

Indoor model			MFZ-KJ09NA	MFZ-KJ12NA	MFZ-KJ15NA	MFZ-KJ18NA
Power supply	V, phase, Hz		208/230, 1, 60			
Max. fuse size (time delay)/ Disconnect switch		A	15		20	
Airflow Super High - High - Med. - Low - Quiet	COOL Dry (Wet)	CFM	417 - 360 - 272 - 198 - 138 (354 - 306 - 231 - 168 - 117)		431 - 392 - 311 - 254 - 198 (366 - 333 - 264 - 216 - 168)	491 - 420 - 328 - 254 - 198 (417 - 357 - 279 - 216 - 168)
	HEAT Dry	CFM	417 - 328 - 254 - 191 - 138		470 - 399 - 328 - 268 - 212	
Sound level Super High - High - Med. - Low - Quiet	Cooling	dB (A)	46 - 41 - 34 - 27 - 21		47 - 43 - 38 - 33 - 28	50 - 45 - 39 - 33 - 28
	Heating	dB (A)	46 - 40 - 34 - 27 - 21		49 - 45 - 40 - 35 - 29	49 - 45 - 40 - 35 - 29
Cond. drain connection O.D.		in.	5/8			
Dimensions	W	in.	29-17/32			
	D		8-15/32			
	H		23-5/8			
Weight		lb.	33			
External finish			White			
Control voltage (by built-in transformer)			12 - 24 VDC			

NOTE: Test conditions are based on ARI 210/240.

2. Multi connection

Indoor model			MFZ-KJ09NA	MFZ-KJ12NA	MFZ-KJ15NA	MFZ-KJ18NA
Power supply	V, phase, Hz		208/230, 1, 60			
Max. fuse size (time delay)/ Disconnect switch		A	15		20	
Airflow Super High - High - Med. - Low - Quiet	COOL Dry (Wet)	CFM	275 - 251 - 208 173 - 138 (234 - 213 - 177 - 147 - 117)		374 - 328 - 282 - 237 - 198 (318 - 279 - 240 - 201 - 168)	
	HEAT Dry	CFM	343 - 219 - 180 - 159 - 138		470 - 325 - 290 - 254 - 212	
Sound level Super High - High - Med. - Low - Quiet	Cooling	dB (A)	38 - 34 - 30 - 25 - 21		43 - 40 - 36 - 31 - 28	
	Heating	dB (A)	41 - 32 - 27 - 24 - 21		49 - 39 - 36 - 34 - 29	
Cond. drain connection O.D.		in.	5/8			
Dimensions	W	in.	29-17/32			
	D		8-15/32			
	H		23-5/8			
Weight		lb.	33			
External finish			White			
Control voltage (by built-in transformer)			12 - 24 VDC			

NOTE: Test conditions are based on ARI 210/240.

OPERATING RANGE

(1) POWER SUPPLY

	Rated voltage	Guaranteed voltage (V)
Indoor unit	208/230 V 1 phase 60 Hz	Min. 187 208 230 Max. 253

(2) OPERATION

Mode	Condition	Intake air temperature (°F)			
		Indoor		Outdoor	
		DB	WB	DB	WB
Cooling	Standard temperature	80	67	95	—
	Maximum temperature	90	73	115	—
	Minimum temperature	67	57	14	—
	Maximum humidity	78%		—	
Heating	Standard temperature	70	60	47	43
	Maximum temperature	80	67	75	65
	Minimum temperature	70	60	-13	-14

OUTLET AIR SPEED AND COVERAGE

1. Single connection

Model	Mode	Function	Airflow (CFM)	Air speed (ft./s.)	Coverage (ft.)
MFZ-KJ09NA MFZ-KJ12NA	HEAT	Dry	417	20.3	29.6
	COOL	Dry	417	20.3	29.6
		Wet	354	17.2	25.3
MFZ-KJ15NA	HEAT	Dry	470	22.9	33.3
	COOL	Dry	431	21.0	30.6
		Wet	366	17.8	26.2
MFZ-KJ18NA	HEAT	Dry	470	22.9	33.3
	COOL	Dry	491	23.9	34.8
		Wet	417	20.3	29.7

- The air coverage is the figure up to the position where the air speed is 1 ft./s., when air is blown out horizontally from the unit properly at the High speed position.
  The coverage should be used only as a general guideline since it varies according to the size of the room and furniture arranged inside the room.

2. Multi connection

Model	Mode	Function	Airflow (CFM)	Air speed (ft./s.)	Coverage (ft.)
MFZ-KJ09NA MFZ-KJ12NA	HEAT	Dry	343	16.7	24.5
	COOL	Dry	275	13.4	19.8
		Wet	234	11.4	16.9
MFZ-KJ15NA MFZ-KJ18NA	HEAT	Dry	470	22.9	33.3
	COOL	Dry	374	18.2	26.7
		Wet	318	15.5	22.8

MUFZ-KJ09NAHZ MUFZ-KJ12NAHZ MUFZ-KJ15NAHZ MUFZ-KJ18NAHZ

Outdoor unit model			MUFZ-KJ09NAHZ	MUFZ-KJ12NAHZ	MUFZ-KJ15NAHZ	MUFZ-KJ18NAHZ
Capacity Rated (Minimum~Maximum)	Cooling ❊1	Btu/h	9,000 (2,300 - 14,000)	12,000 (2,300 - 15,000)	15,000 (5,300 - 19,000)	17,000 (5,300 - 22,500)
	Heating 47 ❊1	Btu/h	11,000 (2,900 - 19,000)	13,000 (2,900 - 22,800)	18,000 (5,700 - 25,000)	21,000 (5,700 - 29,000)
Capacity Rated (Maximum)	Heating 17 ❊2	Btu/h	7,500 (13,400)	8,800(14,800)	12,000 (20,500)	12,800 (23,000)
Power consumption Rated (Minimum~Maximum)	Cooling ❊1	W	570 (180 - 1,250)	890 (180 - 1,380)	1,120 (420 - 1,850)	1,350 (420 - 2,320)
	Heating 47 ❊1	W	750 (270 - 2,370)	900 (270 - 2,390)	1,410 (480 - 3,410)	1,730 (480 - 3,430)
Power consumption Rated (Maximum)	Heating 17 ❊2	W	810 (1,860)	930 (1,890)	1,300 (3,190)	1,430 (3,210)
EER ❊1 [SEER] ❊3	Cooling		15.8 [28.2]	13.6 [25.5]	13.5 [21.8]	12.6 [21.0]
HSPF IV ❊4	Heating		13.0	12.0	11.6	11.3
COP	Heating ❊1		4.3	4.2	3.7	3.5
Power supply	V , phase , Hz		208/230, 1 , 60			
Max. fuse size (time delay)		A	15		20	
Min. circuit ampacity		A	11		16	
Fan motor		F.L.A	0.50		0.93	
Compressor	Model		SNB140FQUMT		SNB172FQKMT	
		R.L.A	8.2		12.0	
		L.R.A	10.3		15.0	
	Refrigeration oil	fl oz. (L) (Model)	11.8 (0.35)/(FV50S)		13.5 (0.40)/(FV50S)	
Refrigerant control			Linear expansion valve			
Sound level ❊1	Cooling	dB(A)	48	48	51	51
	Heating	dB(A)	50	50	55	55
Defrost method			Reverse cycle			
Dimensions	W	in.	31-1/2		33-1/16	
	D	in.	11-1/4		13	
	H	in.	21-5/8		34-5/8	
Weight		lb.	83		124	
External finish			Munsell 3Y 7.8/1.1			
Remote controller			Wireless type			
Control voltage (by built-in transformer)		VDC	12 - 24			
Refrigerant piping			Not supplied			
Refrigerant pipe size (Min. wall thickness)	Liquid	in.	1/4 (0.0315)			
	Gas	in.	3/8 (0.0315)		1/2 (0.0315)	
Connection method	Indoor		Flared			
	Outdoor		Flared			
Between the indoor & outdoor units	Height difference	ft.	40		50	
	Piping length	ft.	65		100	
Refrigerant charge (R410A)			2 lb. 10 oz.		3 lb. 5 oz.	

NOTE: Test conditions are based on AHRI 210/240.

❊1: Rating conditions (Cooling) — Indoor: 80˚FDB, 67˚FWB, Outdoor: 95˚FDB, (75˚FWB)
(Heating) — Indoor: 70˚FDB, 60˚FWB, Outdoor: 47˚FDB, 43˚FWB

❊2: (Heating) — Indoor: 70˚FDB, 60˚FWB, Outdoor: 17˚FDB, 15˚FWB

Test condition

❊3,❊4

ARI	Mode	Test	Indoor air condition (°F)		Outdoor air condition (°F)	
			Dry bulb	Wet bulb	Dry bulb	Wet bulb
	SEER (Cooling)	"A-2" Cooling Steady State at rated compressor Speed	80	67	95	(75)
		"B-2" Cooling Steady State at rated compressor Speed	80	67	82	(65)
		"B-1" Cooling Steady State at minimum compressor Speed	80	67	82	(65)
		"F-1" Cooling Steady State at minimum compressor Speed	80	67	67	(53.5)
		"E-V" Cooling Steady State at Intermediate compressor Speed ❊5	80	67	87	(69)
	HSPF (Heating)	"H1-2" Heating Steady State at rated compressor Speed	70	60	47	43
		"H3-2" Heating at rated compressor Speed	70	60	17	15
		"H0-1" Heating Steady State at minimum compressor Speed	70	60	62	56.5
		"H1-1" Heating Steady State at minimum compressor Speed	70	60	47	43
		"H2-V" Heating at Intermediate compressor Speed ❊5	70	60	35	33

❊5: At Intermediate compressor Speed
= ("Rated compressor speed" - "minimum compressor speed") / 3 + "minimum compressor speed".

OPERATING RANGE

(1) POWER SUPPLY

	Rated voltage	Guaranteed voltage (V)
Outdoor unit	208/230 V 1 phase 60 Hz	Min. 187 — 208 — 230 — Max. 253

(2) OPERATION

Mode	Condition	Intake air temperature (°F)			
		Indoor		Outdoor	
		DB	WB	DB	WB
Cooling	Standard temperature	80	67	95	—
	Maximum temperature	90	73	115	—
	Minimum temperature	67	57	14	—
	Maximum humidity	78 %		—	
Heating	Standard temperature	70	60	47	43
	Maximum temperature	80	67	75	65
	Minimum temperature	70	60	-13	-14

3 OUTLINES AND DIMENSIONS

3-1. INDOOR UNIT

Unit: inch

MS-A09WA MS-A12WA

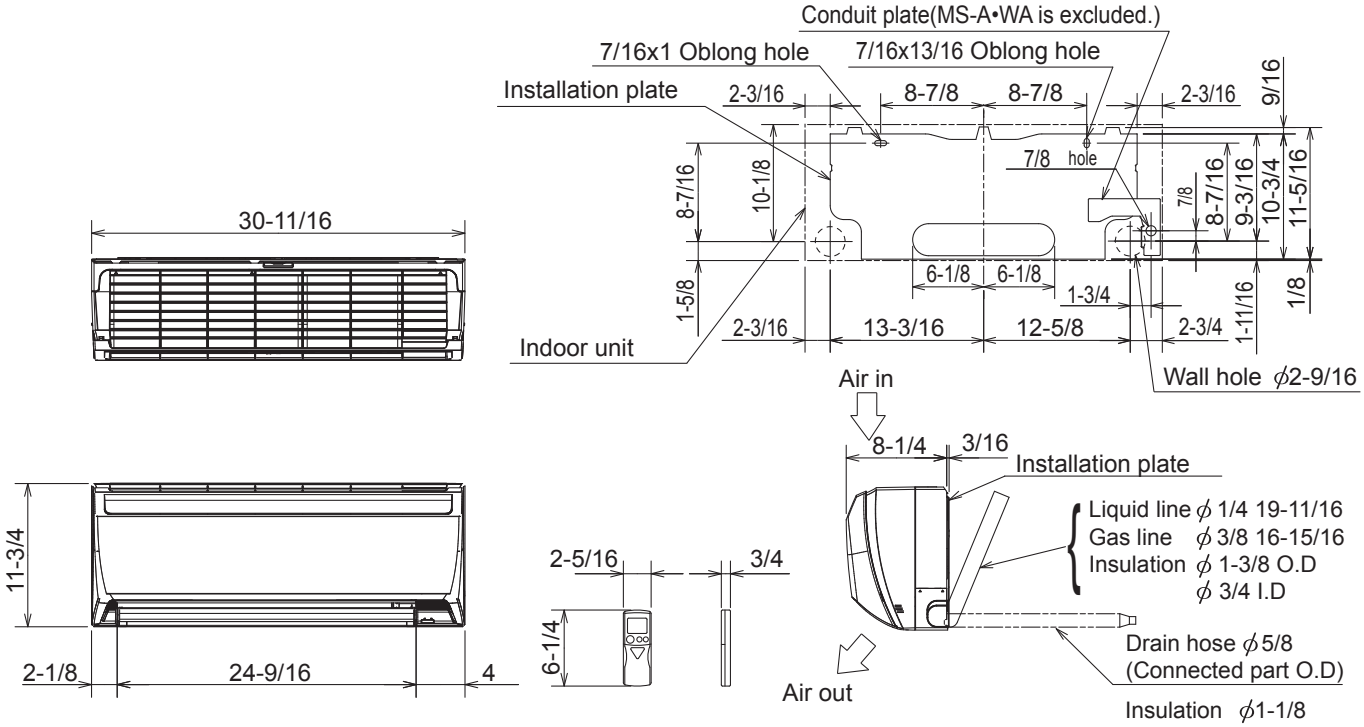

MSZ-GL06NA MSZ-GL09NA MSZ-GL12NA MSZ-GL15NA
MSY-GL09NA MSY-GL12NA MSY-GL15NA

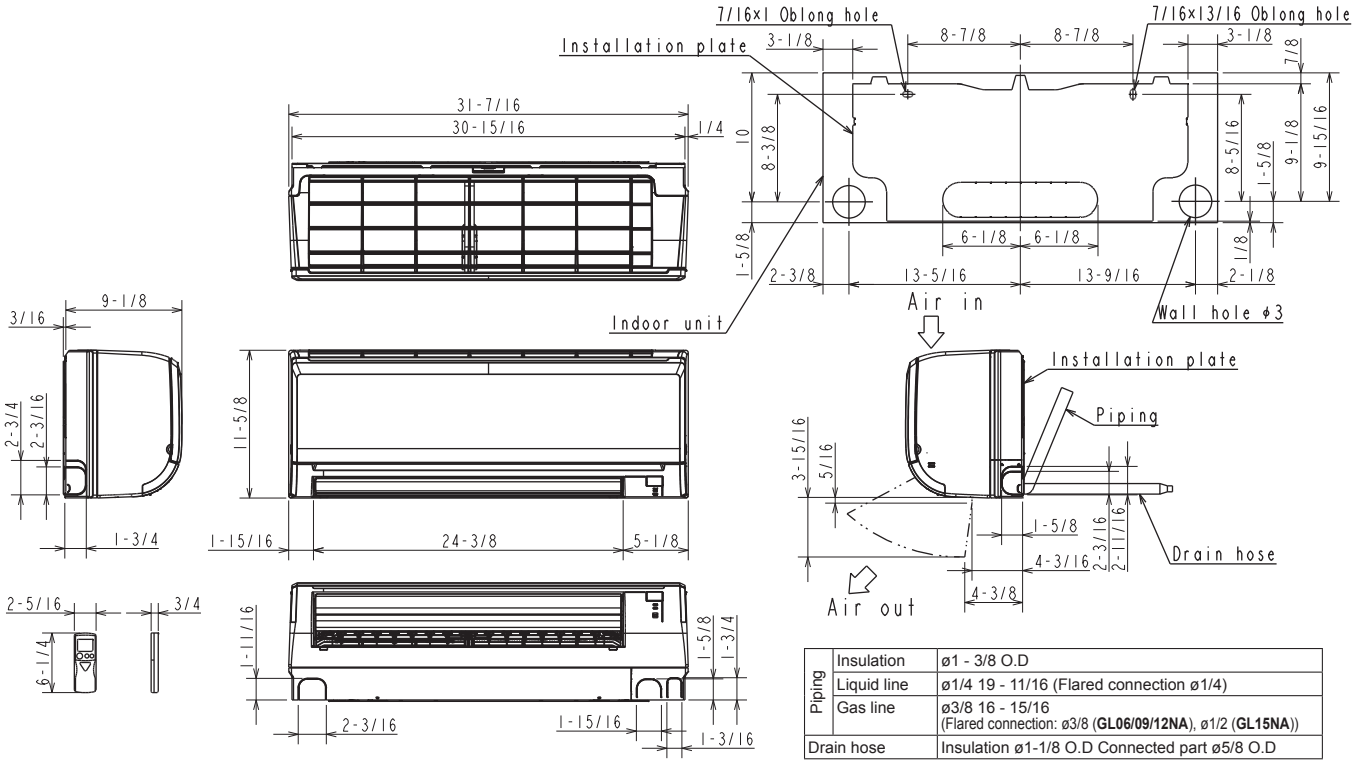

Piping	Insulation	ø1 - 3/8 O.D
	Liquid line	ø1/4 19 - 11/16 (Flared connection ø1/4)
	Gas line	ø3/8 16 - 15/16 (Flared connection: ø3/8 (**GL06/09/12NA**), ø1/2 (**GL15NA**))
Drain hose		Insulation ø1-1/8 O.D Connected part ø5/8 O.D

MSZ-GL18NA
MSY-GL18NA

Unit: inch

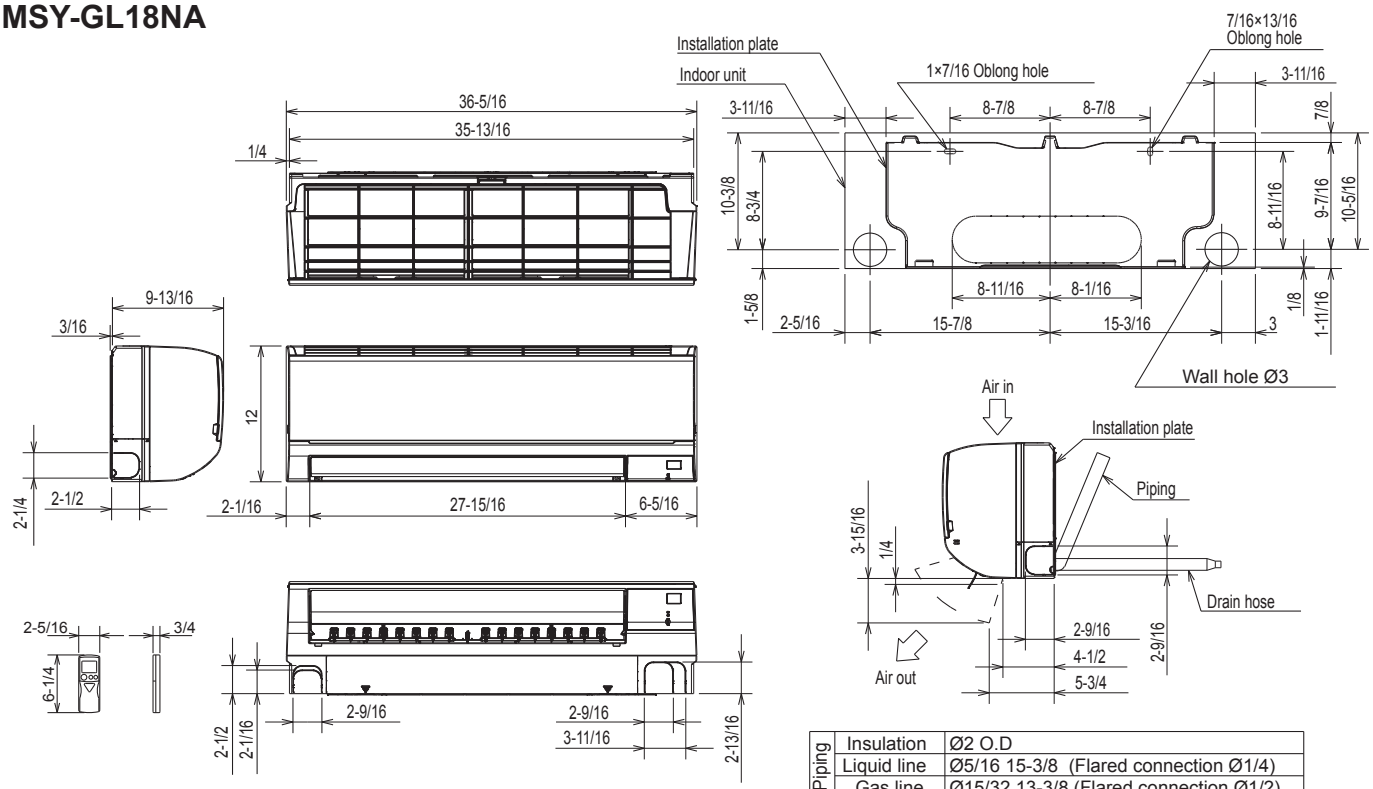

Piping	Insulation	Ø2 O.D
	Liquid line	Ø5/16 15-3/8 (Flared connection Ø1/4)
	Gas line	Ø15/32 13-3/8 (Flared connection Ø1/2)
Drain hose		Insulation Ø1-1/8 Connected part Ø5/8 O.D

MSZ-GL24NA
MSY-GL24NA

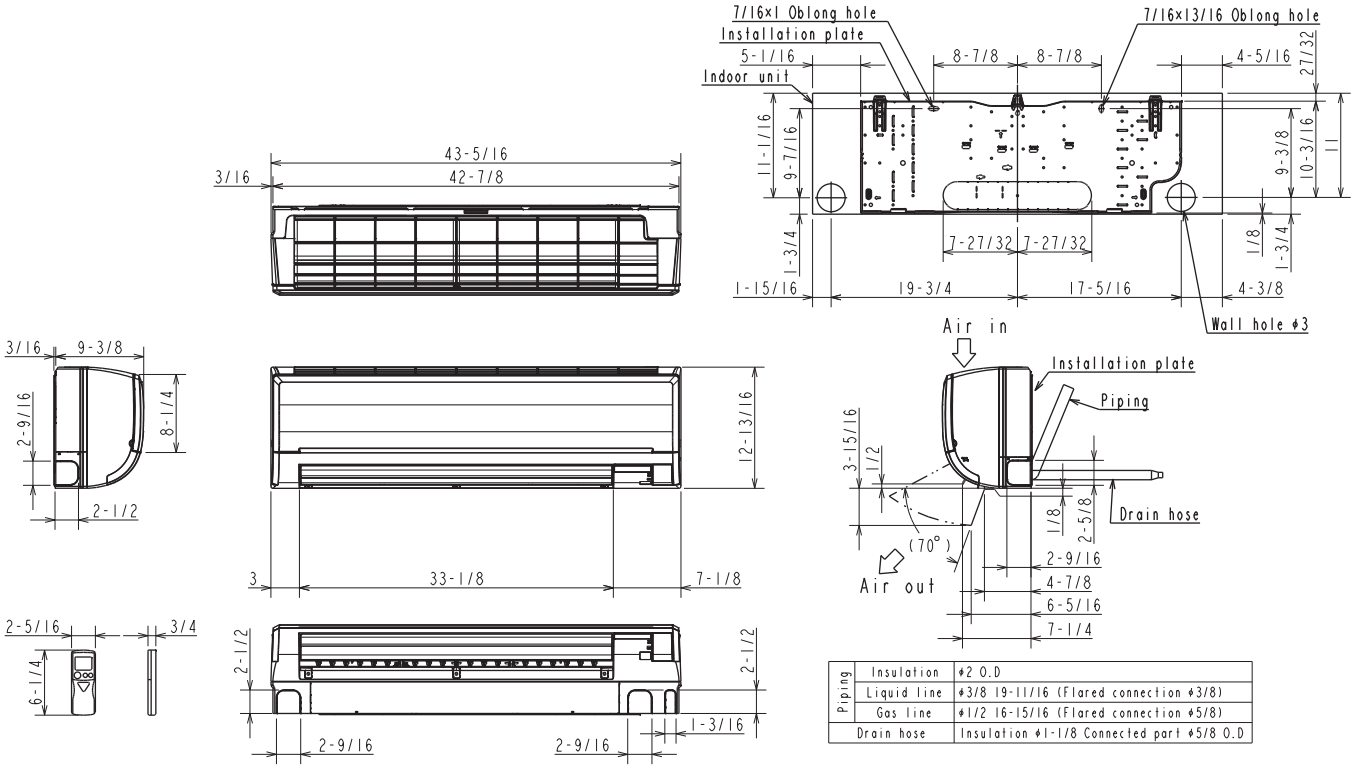

Piping	Insulation	ϕ2 O.D
	Liquid line	ϕ3/8 19-11/16 (Flared connection ϕ3/8)
	Gas line	ϕ1/2 16-15/16 (Flared connection ϕ5/8)
Drain hose		Insulation ϕ1-1/8 Connected part ϕ5/8 O.D

MSZ-HM09NA MSZ-HM12NA MSZ-HM15NA

Unit: inch

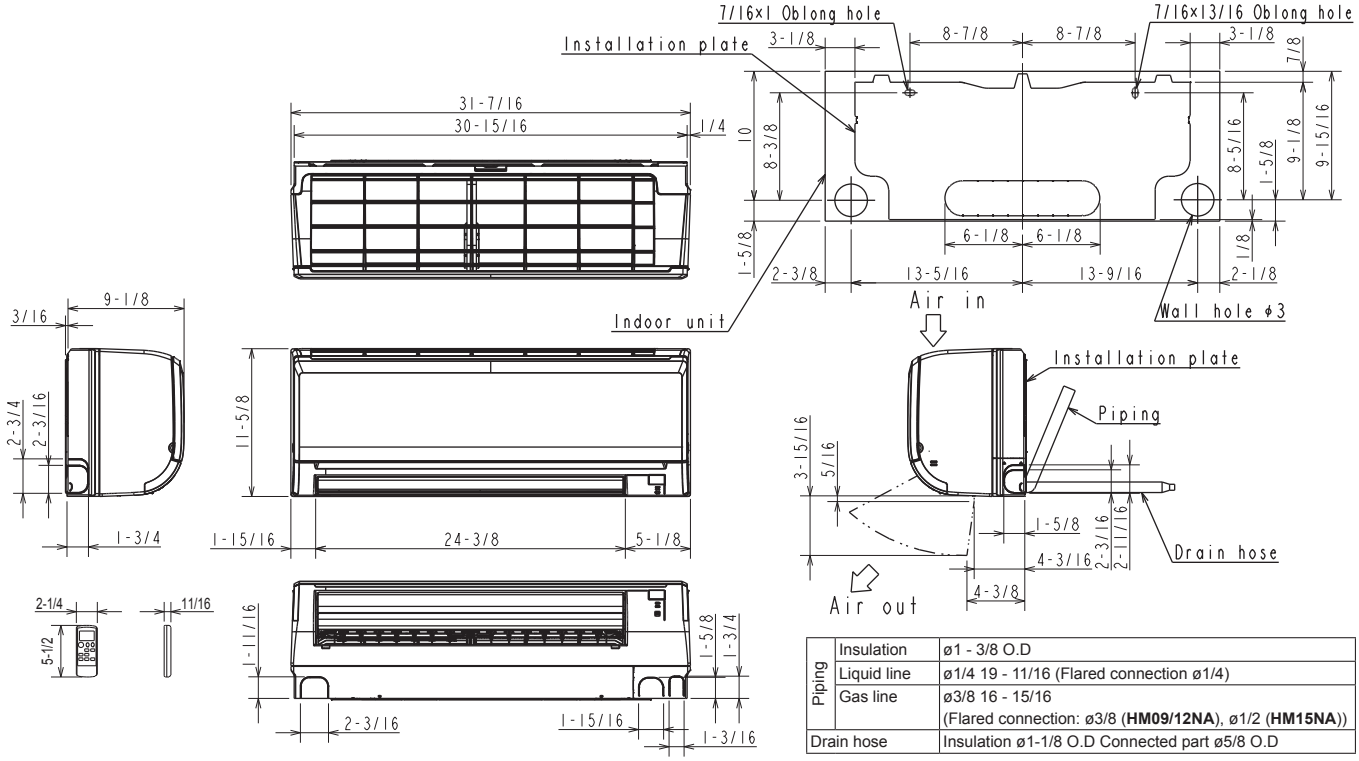

Piping	Insulation	ø1 - 3/8 O.D
	Liquid line	ø1/4 19 - 11/16 (Flared connection ø1/4)
	Gas line	ø3/8 16 - 15/16 (Flared connection: ø3/8 (**HM09/12NA**), ø1/2 (**HM15NA**))
Drain hose		Insulation ø1-1/8 O.D Connected part ø5/8 O.D

MSZ-HM18NA MSZ-HM24NA

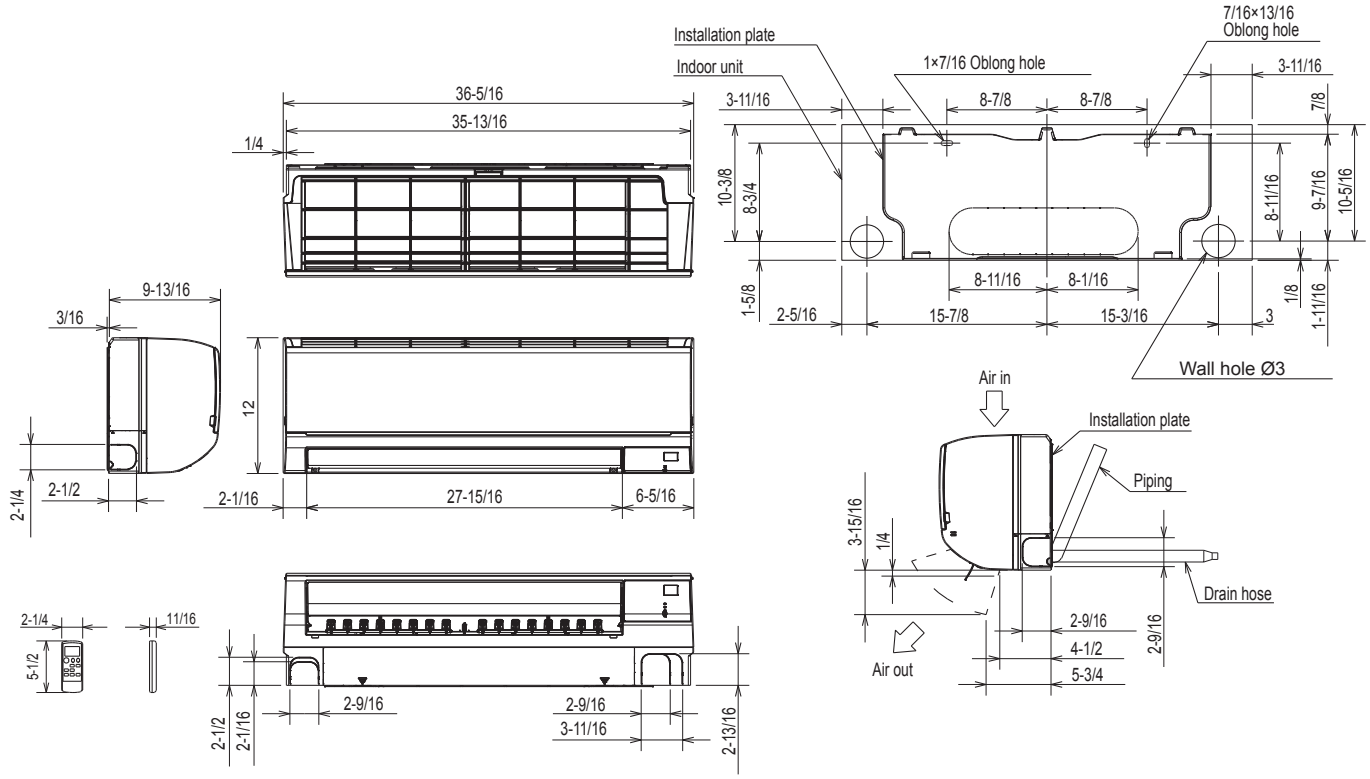

MSY-HM18NA

Piping	Insulation	Ø2 O.D
	Liquid line	Ø5/16 15-3/8 (Flared connection Ø1/4)
	Gas line	Ø15/32 13-3/8 (Flared connection Ø1/2)
Drain hose		Insulation Ø1-1/8 Connected part Ø5/8 O.D

MSY-HM24NA

Piping	Insulation	Ø2 O.D
	Liquid line	Ø5/16 15-3/8 (Flared connection Ø3/8)
	Gas line	Ø15/32 13-3/8 (Flared connection Ø5/8)
Drain hose		Insulation Ø1-1/8 Connected part Ø5/8 O.D

MSZ-FH06NA MSZ-FH09NA MSZ-FH12NA MSZ-FH15NA MSZ-FH18NA2

Unit: inch

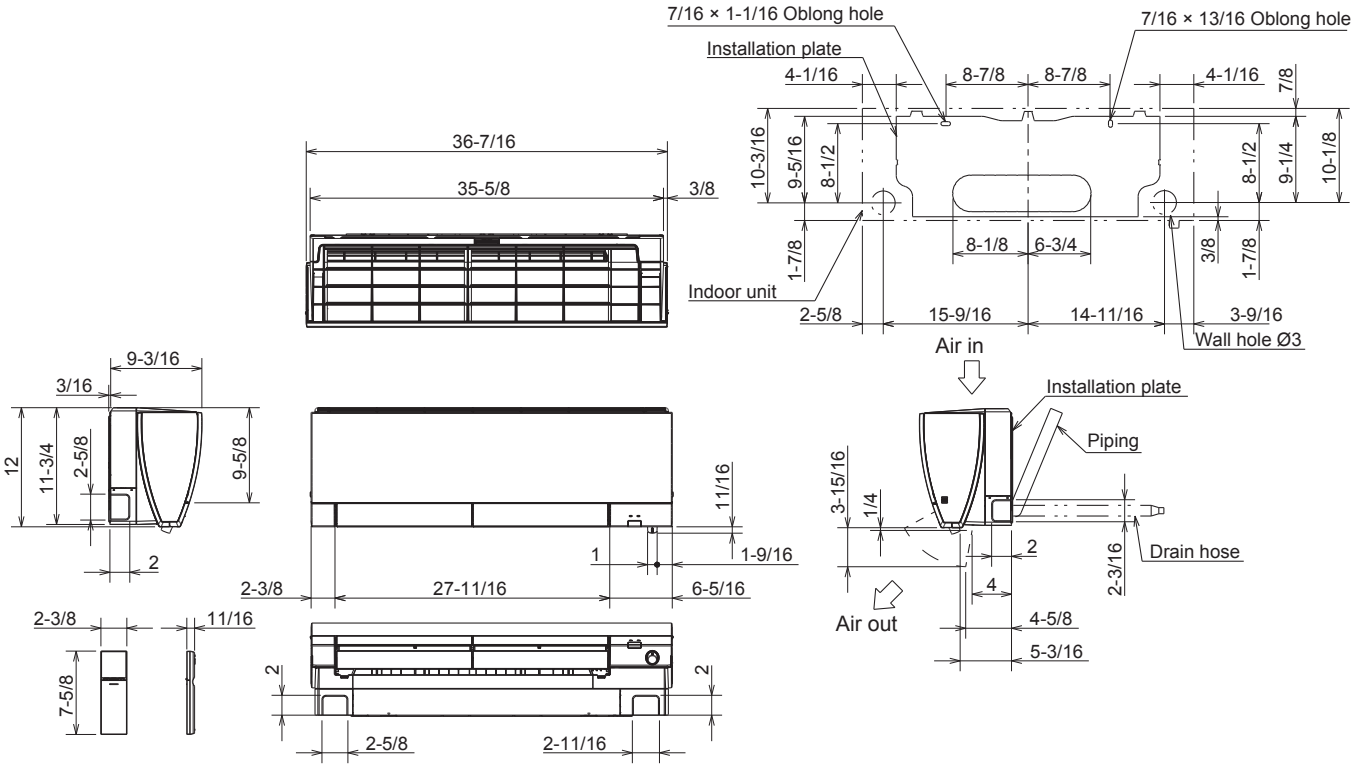

(MSZ-FH06/09/12NA)

Piping	Insulation	Ø1-7/16 O.D
	Liquid line	Ø1/4 19-11/16 (Flared connection Ø1/4)
	Gas line	Ø3/8 16-15/16 (Flared connection Ø3/8)
Drain hose		Insulation Ø1-1/8 Connected part Ø5/8 O.D

(MSZ-FH15NA, MSZ-FH18NA2)

Piping	Insulation	Ø1-7/16 O.D
	Liquid line	Ø1/4 19-11/16 (Flared connection Ø1/4)
	Gas line	Ø3/8 16-15/16 (Flared connection Ø1/2)
Drain hose		Insulation Ø1-1/8 Connected part Ø5/8 O.D

MSZ-FE09NA MSZ-FE12NA

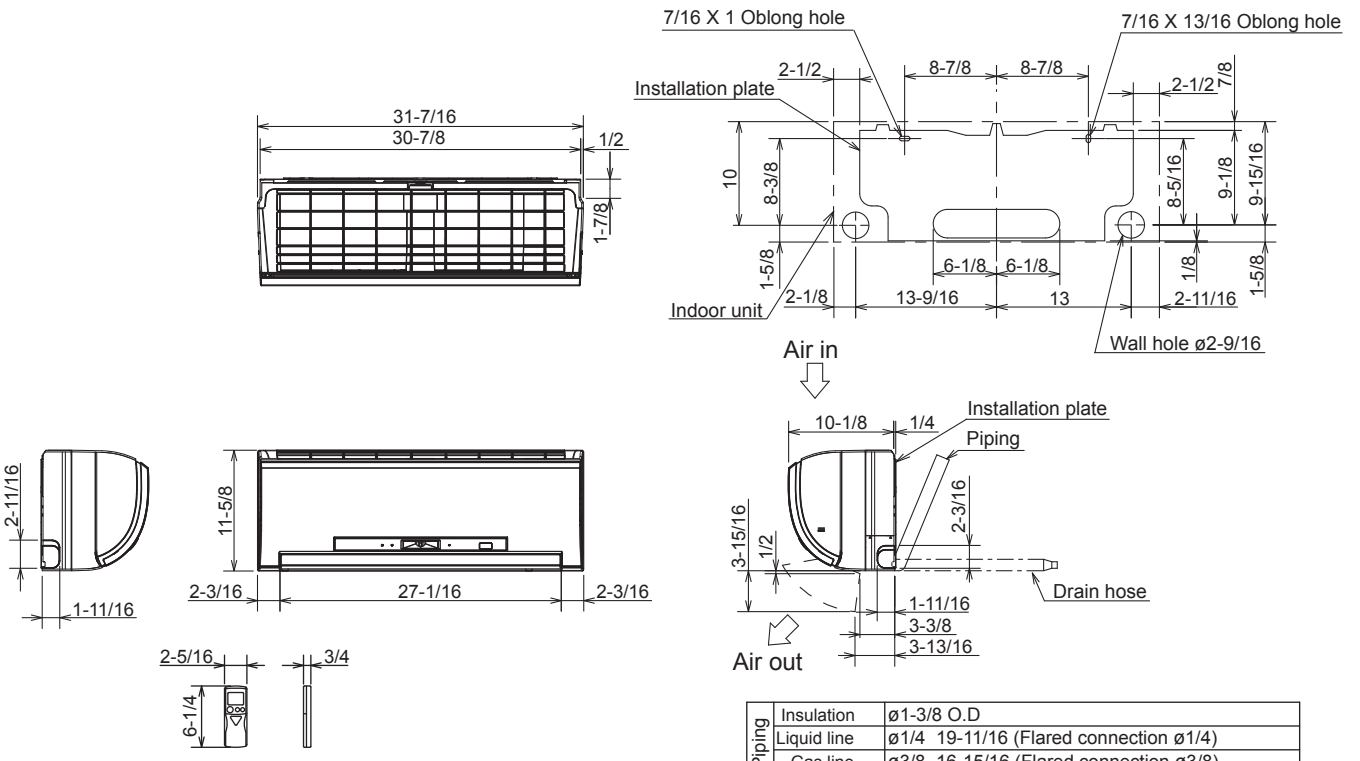

Piping	Insulation	ø1-3/8 O.D
	Liquid line	ø1/4 19-11/16 (Flared connection ø1/4)
	Gas line	ø3/8 16-15/16 (Flared connection ø3/8)
Drain hose		Insulation ø1-1/8 O.D Connected part ø5/8 O.D

MSZ-D30NA MSZ-D36NA MSY-D30NA MSY-D36NA

Unit: inch

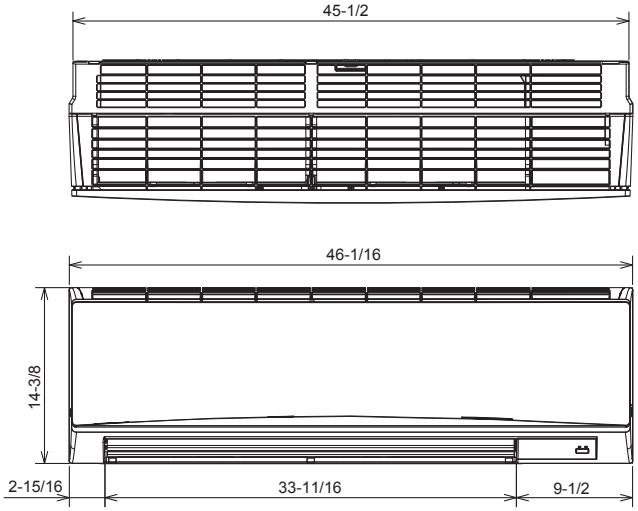

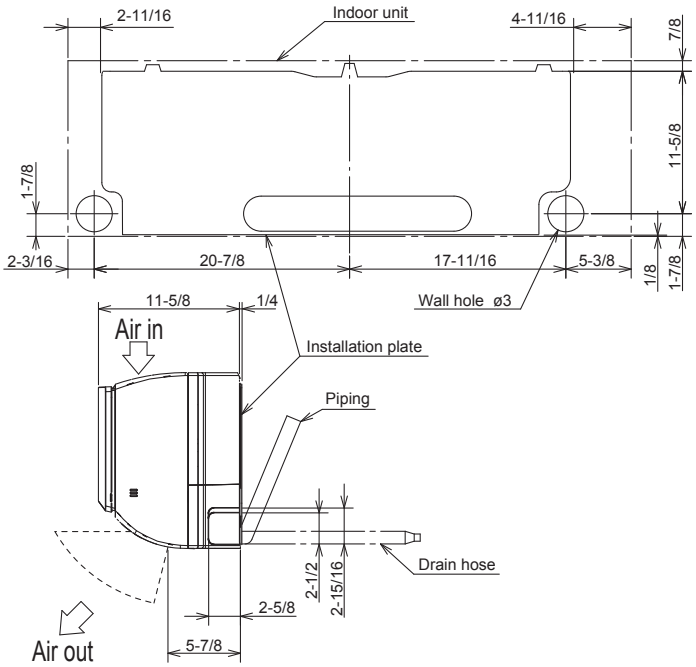

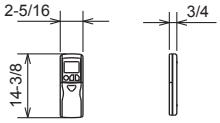

Wireless remote controller

	Piping	Insulation
Liquid line	ø3/8 19-11/16 (Flared connection ø3/8)	ø1-1/4 O.D ø9/16 I.D
Gas line	ø5/8 16-7/8 (Joint connection ø5/8)	ø1-15/16 O.D ø1-1/4 I.D
Joint	ø5/8 (Flared connection ø5/8)	ø1-15/16 O.D ø1-1/4 I.D
Drain hose	Insulation ø1-1/8 Connected part ø5/8 O.D	

Required Space (Indoor Unit)

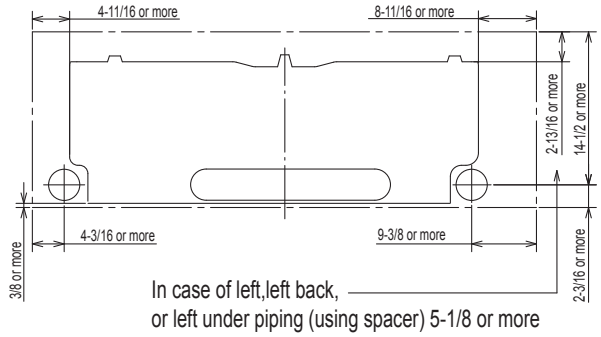

SEZ-KD09NA4 SEZ-KD12NA4 SEZ-KD15NA4 SEZ-KD18NA4

Unit: mm (inch)

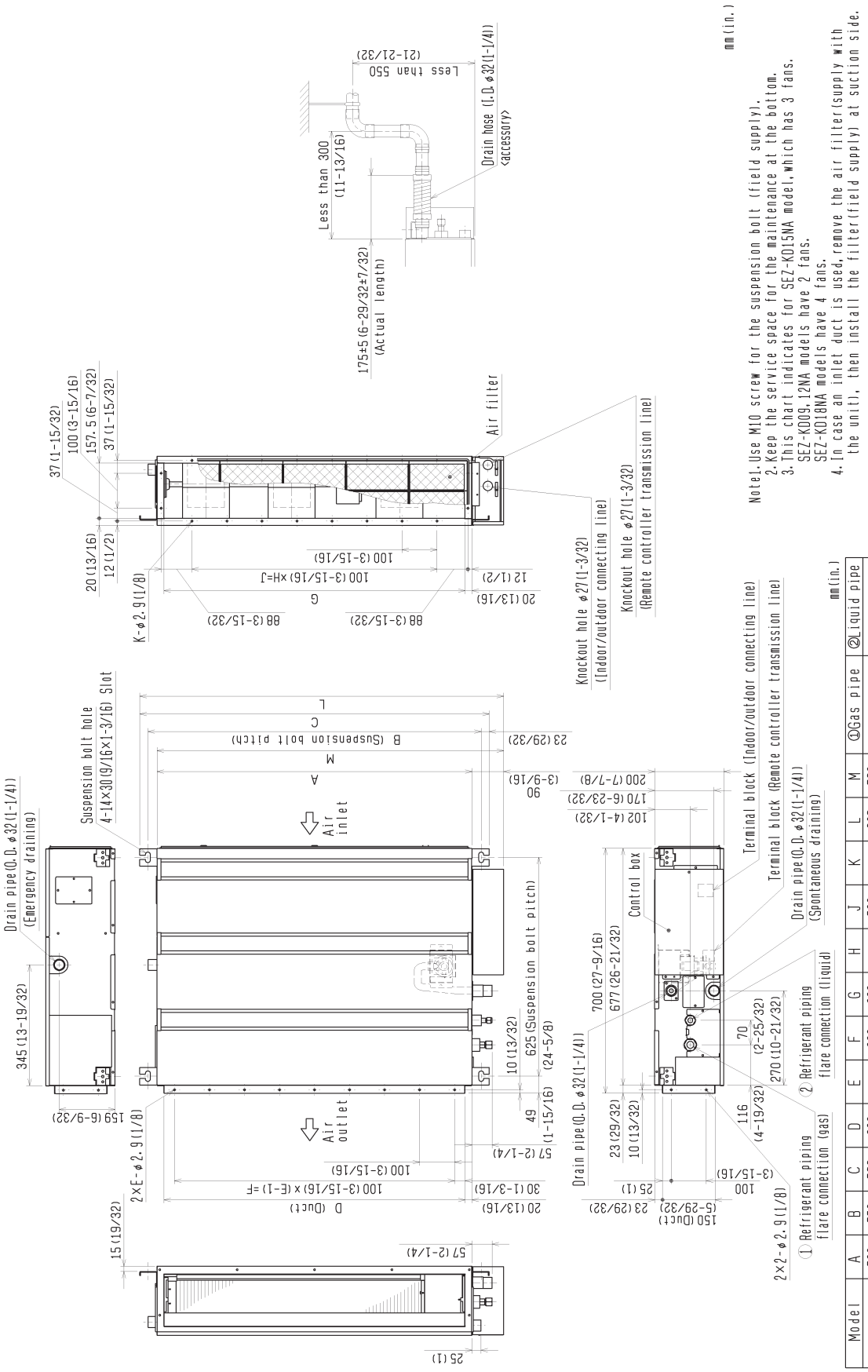

Note1. Use M10 screw for the suspension bolt (field supply).
2. Keep the service space for the maintenance at the bottom.
3. This chart indicates for SEZ-KD15NA model, which has 3 fans.
SEZ-KD09, 12NA models have 2 fans.
SEZ-KD18NA models have 4 fans.
4. In case an inlet duct is used, remove the air filter(supply with the unit), then install the filter(field supply) at suction side.

mm(in.)

Model	A	B	C	D	E	F	G	H	J	K	L	M	①Gas pipe	②Liquid pipe
SEZ-KD09NA4	700 (27-9/16)	752 (29-5/8)	798 (31-7/16)	660 (26)	7	600 (23-5/8)	660 (26)	5	500 (19-11/16)	16	839 (33-1/16)	790 (31-1/8)	φ9.52(3/8)	φ6.35(1/4)
SEZ-KD12NA4	900 (35-7/16)	952 (37-1/2)	998 (39-5/16)	860 (33-7/8)	9	800 (31-1/2)	860 (33-7/8)	7	700 (27-9/16)	20	1039 (40-29/32)	990 (39)	φ12.7(1/2)	
SEZ-KD15NA4														
SEZ-KD18NA4	1100 (43-5/16)	1152 (45-3/8)	1198 (47-3/16)	1060 (41-3/4)	11	1000 (39-3/8)	1060 (41-3/4)	9	900 (35-7/16)	24	1239 (48-25/32)	1190 (46-7/8)		

(Maintenance access space)
Secure enough access space to allow for the maintenance, inspection, and replacement of the motor, fan, drain pump, heat exchanger, and electric box in one of the following ways.
Select an installation site for the indoor unit so that its maintenance access space will not be obstructed by beams or other objects.

(1) When a space of 300mm(11-13/16) or more is available below the unit between the unit and the ceiling. (Fig.1)
- Create access door 1 and 2 (450x450mm(17-23/32×17-23/32) each) as shown in Fig.2.
  (Access door 2 is not required if enough space is available below the unit for a maintenance worker to work in.)

(2) When a space of less than 300mm(11-13/16) is available below the unit between the unit and the ceiling.
(At least 20mm(13/16) of space should be left below the unit as shown in Fig.3.)
- Create access door 1 diagonally below the electric box and access door 3 below the unit as shown in Fig.4.
  or
- Create access door 4 below the electric box and the unit as shown in Fig.5.

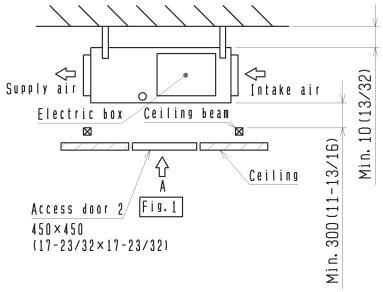

Fig.1

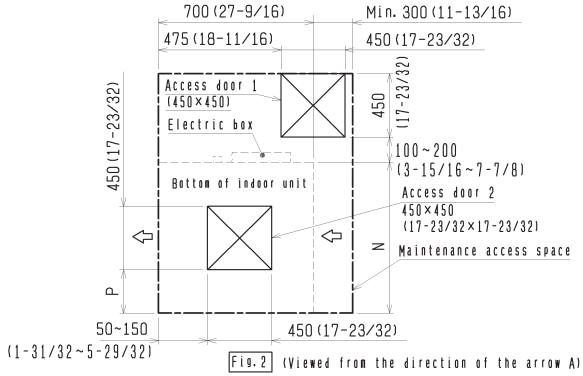

Fig.2 (Viewed from the direction of the arrow A)

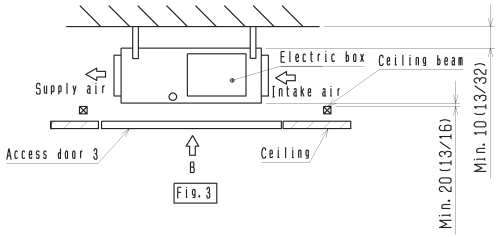

Fig.3

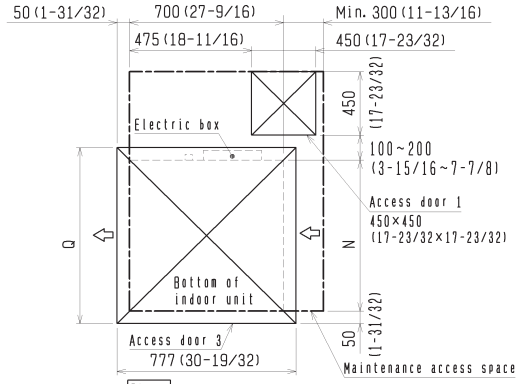

Fig.4 (Viewed from the direction of the arrow B)

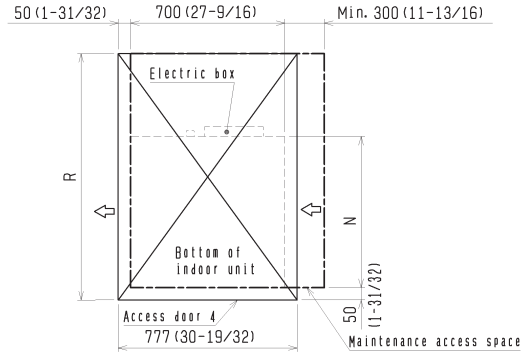

Fig.5 (Viewed from the direction of the arrow B)

Model	N	P	Q	R
SEZ-KD09NA4	700 (27-9/16)	50~150 (1-31/32~5-29/32)	800 (31-1/2)	1300 (51-3/16)
SEZ-KD12NA4	900 (35-7/16)	150~250 (5-29/32~9-27/32)	1000 (39-3/8)	1500 (59-1/16)
SEZ-KD15NA4				
SEZ-KD18NA4	1100 (43-5/16)	250~350 (9-27/32~13-25/32)	1200 (47-1/4)	1700 (66-15/16)

SLZ-KA09NA SLZ-KA12NA SLZ-KA15NA

Unit: inch(mm)

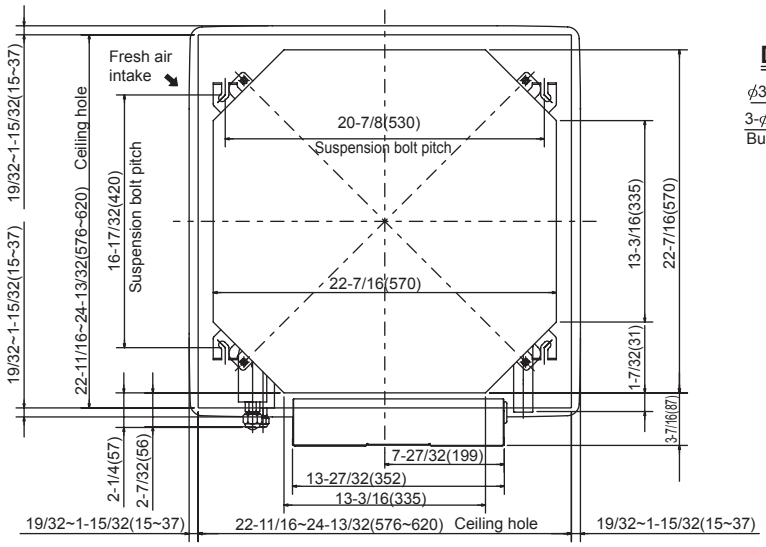

Detail drawing of fresh air intake

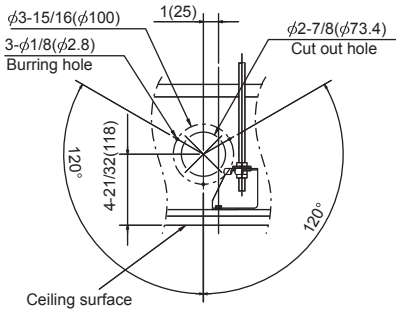

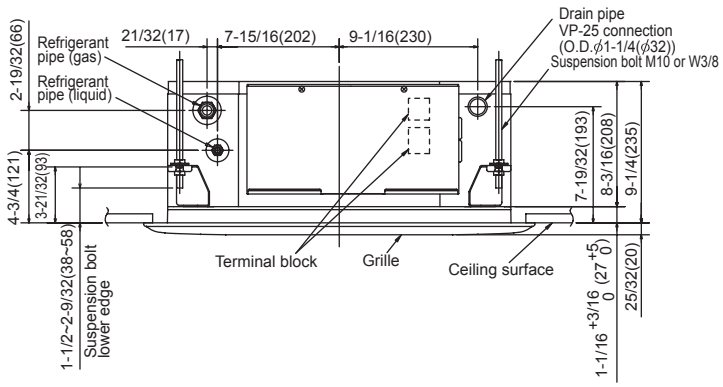

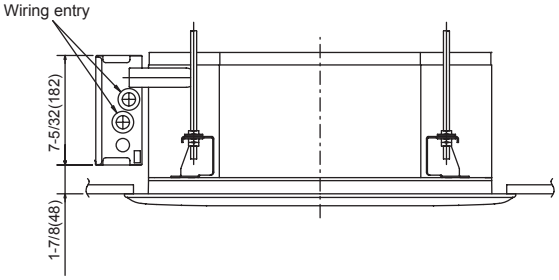

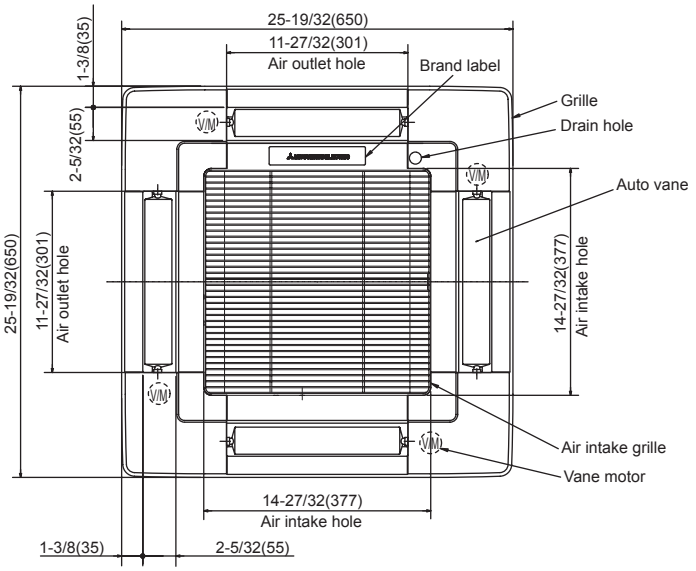

Models	Refrigerant pipe (liquid)	Refrigerant pipe (gas)
SLZ-KA09NA	1/4 inch (ϕ 6.35mm) flared connection	3/8 inch (ϕ 9.52mm) flared connection
SLZ-KA12NA	1/4 inch (ϕ 6.35mm) flared connection	3/8 inch (ϕ 9.52mm) flared connection
SLZ-KA15NA	1/4 inch (ϕ 6.35mm) flared connection	1/2 inch (ϕ 12.7mm) flared connection

PEAD-A09AA7 PEAD-A12AA7 PEAD-A15AA7 PEAD-A18AA7

Unit: mm(inch)

Note 1.Use an M10 screw for the suspension bolt (field supply).
2.Keep the service space for maintenance at the bottom.
3.This drawing is for PEAD-A09·12·15·18 AA7 models have 1 fan.
4.If the inlet duct is used,remove the air filter (supplied with the unit), then install the filter (field supply) at the suction side.
5.Heat air to 0°C (32°F) or higher when taking fresh air with a fresh air intake.

Unit:mm(in.)

Model	J	①Gas pipe	②Liquid pipe
PEAD-A09AA7	62 (2-1/2)	ø9.52 (3/8)	ø6.35 (1/4)
PEAD-A12,15, 18AA7	62 (2-1/2)	ø12.7 (1/2)	ø6.35 (1/4)

Unit:mm(in.)

Model	A	B	C	D	E	F	G	H
PEAD-A09,12, 15,18AA7	900 (35-7/16)	954 (37-9/16)	1000 (39-3/8)	860 (33-7/8)	9	800 (31-1/2)	858 (33-13/16)	72 (2-7/8)

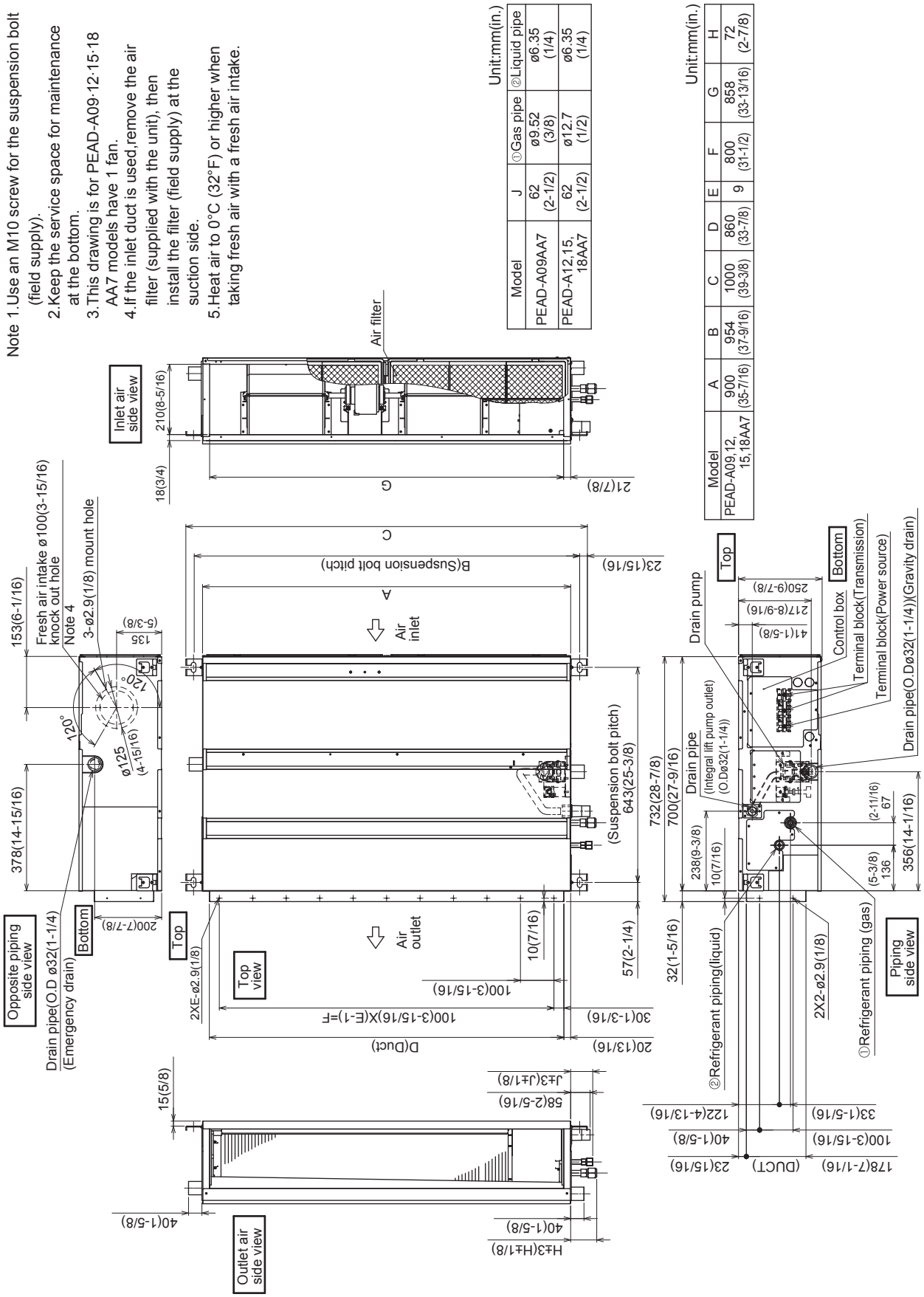

[Maintenance access space]

Secure enough access space to allow for the maintenance, inspection, and replacement of the motor, fan, drain pump, heat exchanger, and control box in one of the following ways.

Select an installation site for the indoor unit so that it's maintenance access space will not be obstructed by beams or other objects.

(1) When a space of 300mm or more is available below the unit between the unit and the ceiling. (Fig.1)
- Create access door 1 and 2 (450x450mm each) as shown in Fig.2.
  (Access door 2 is not required if enough space is available below the unit for a maintenance worker to work in.)

(2) When a space of less than 300mm is available below the unit between the unit and the ceiling.
(At least 20mm of space should be left below the unit as shown in Fig.3.)
- Create access door 1 diagonally below the control box and access door 3 below the unit as shown in Fig.4.
  or
- Create access door 4 below the control box and the unit as shown in Fig.5.

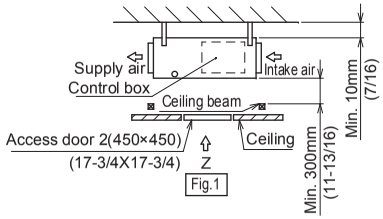

Fig.1

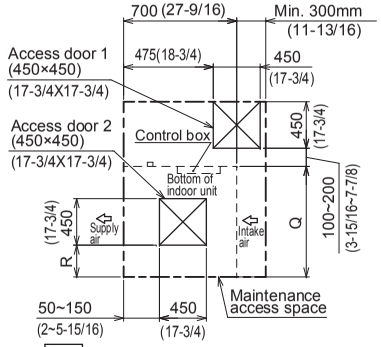

Fig.2 (Viewed from the direction of the arrow Z)

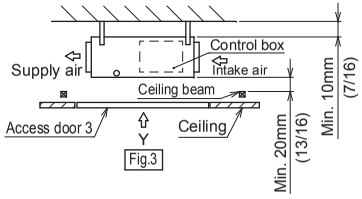

Fig.3

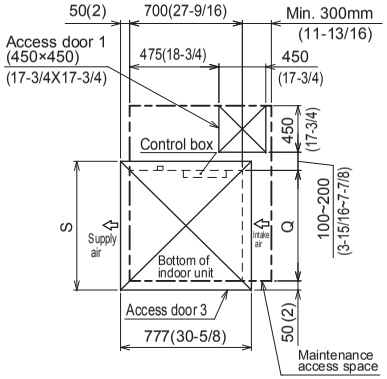

Fig.4 (Viewed from the direction of the arrow Y)

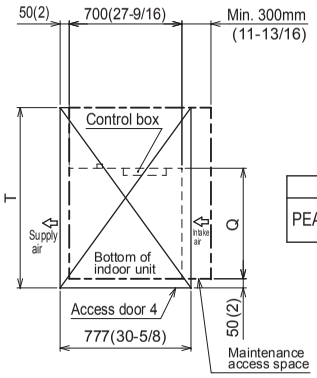

Fig.5 (Viewed from the direction of the arrow Y)

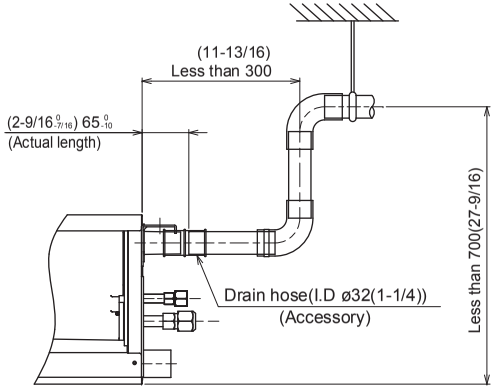

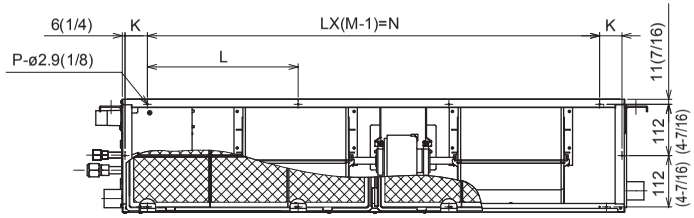

Unit:mm(in.)

Model	K	L	M	N	P	Q	R	S	T
PEAD-A09,12,15,18AA7	54 (2-3/16)	260 (10-1/4)	4	780 (30-3/4)	10	900 (35-7/16)	150~250 (5-15/16)~(9-7/8)	1000 (39-3/8)	1500 (59-1/16)

Unit: mm(inch)

SVZ-KP12NA SVZ-KP18NA

Unit: mm (inch)

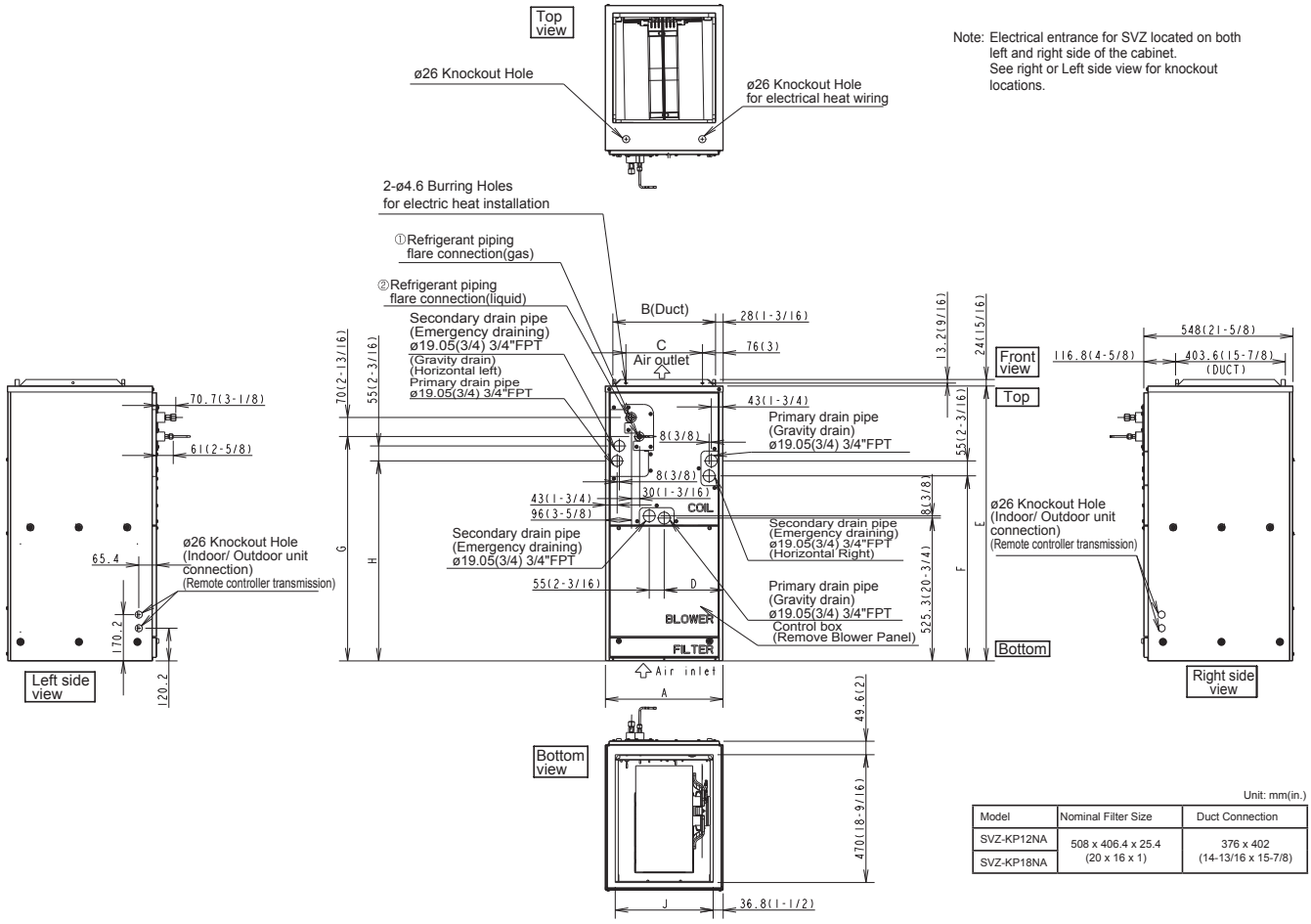

Unit: mm(in.)

Model	Nominal Filter Size	Duct Connection
SVZ-KP12NA	508 x 406.4 x 25.4 (20 x 16 x 1)	376 x 402 (14-13/16 x 15-7/8)
SVZ-KP18NA		

Unit: mm(in.)

Model	A	B	C	D	E	F	G	H	J	Gas Pipe	Liquid pipe
SVZ-KP12NA	432 (17)	376 (14-13/16)	281 (11-1/8)	224 (8-7/8)	1010.8 (39-13/16)	680 (26-13/16)	823 (32-7/16)	735.5 (29)	360 (14-3/16)	ø 9.52 (3/8)	ø 6.35 (174)
SVZ-KP18NA										ø 12.7 (1/2)	

Installation Clearance

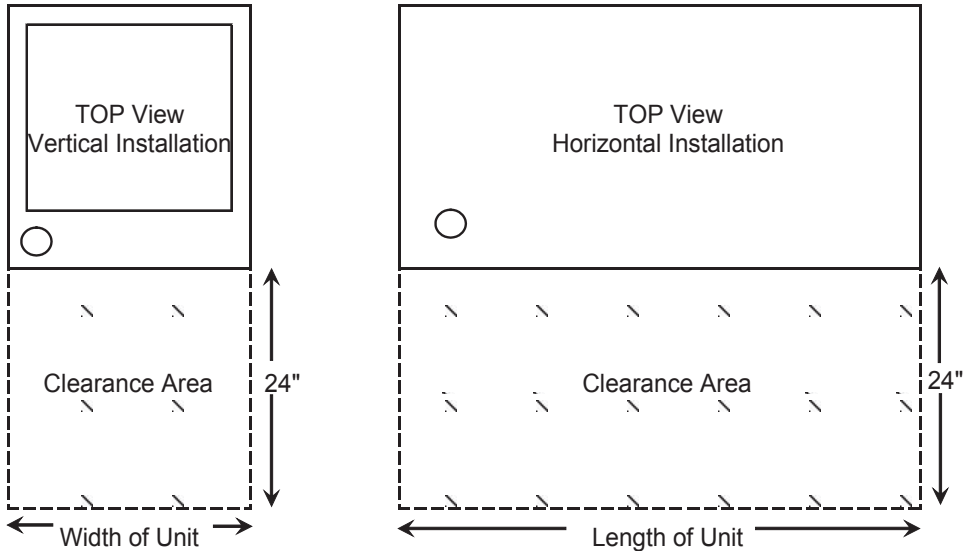

MFZ-KJ09NA MFZ-KJ12NA MFZ-KJ15NA MFZ-KJ18NA

Unit: inch

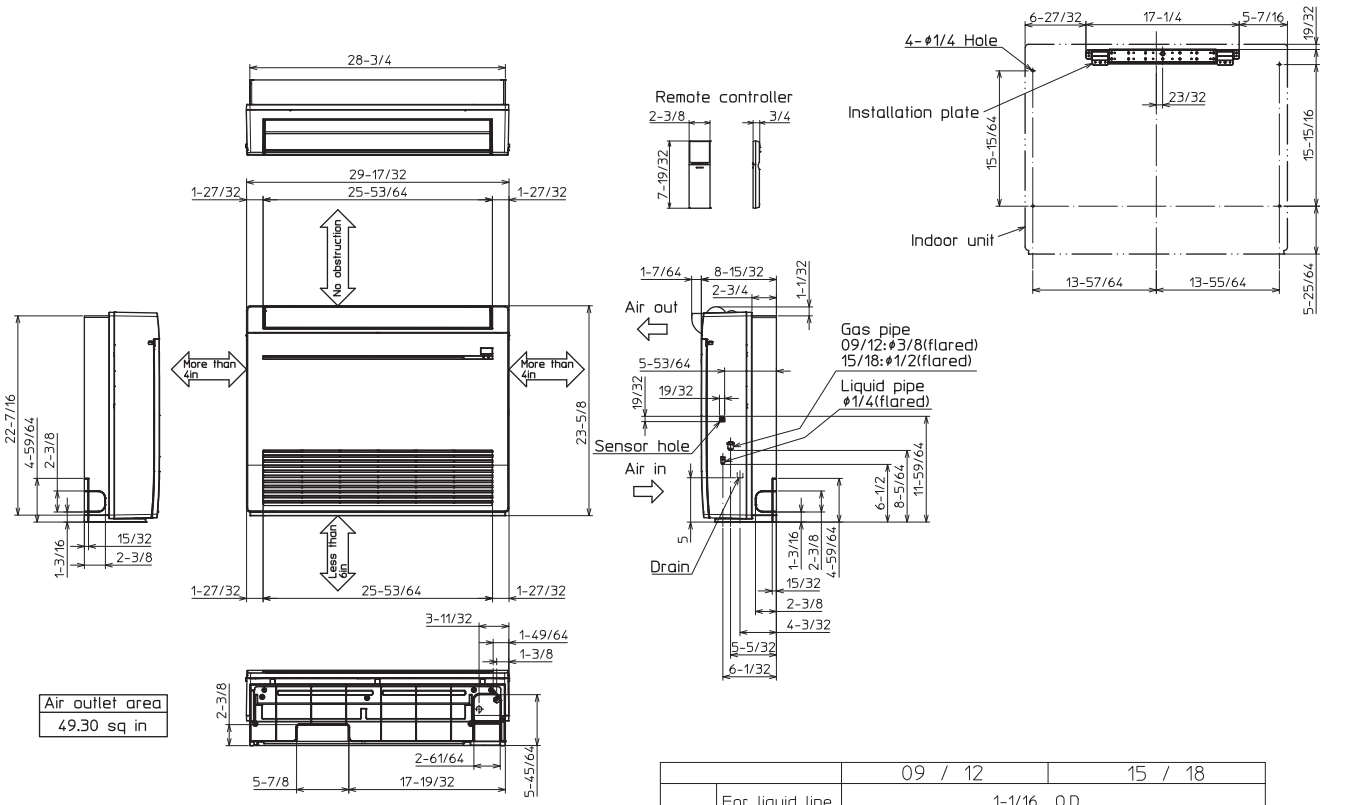

		09 / 12	15 / 18
Pipe cover	For liquid line	1-1/16 O.D	
	For gas line	1-1/16 O.D	1-7/32 O.D
Piping	Liquid line	Flared connection 1/4	
	Gas line	Flared connection 3/8	Flared connection 1/2
Drain hose		Heat insulater 1-9/64 O.D Connection point 5/8 O.D	Effective length 13-25/32 (case of right backward piping)

3-2. OUTDOOR UNIT

Unit: inch

MU-A09WA

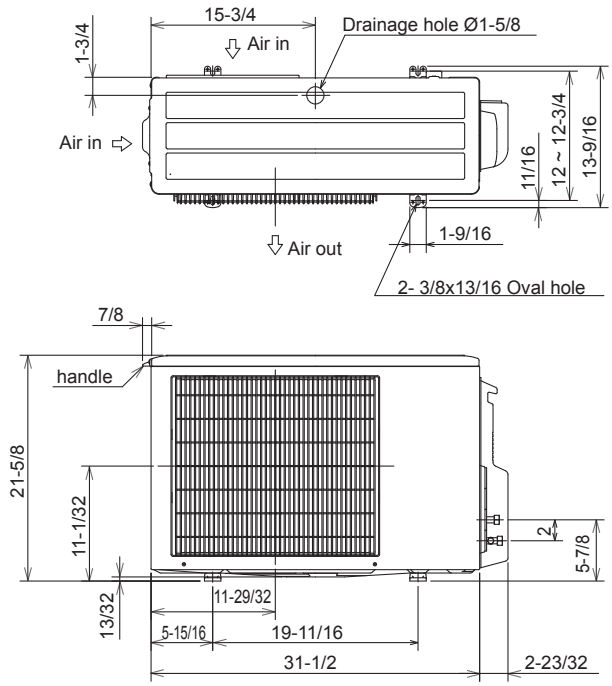

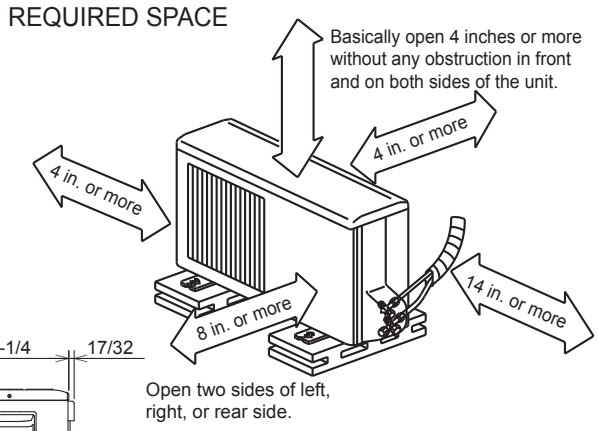

MU-A12WA

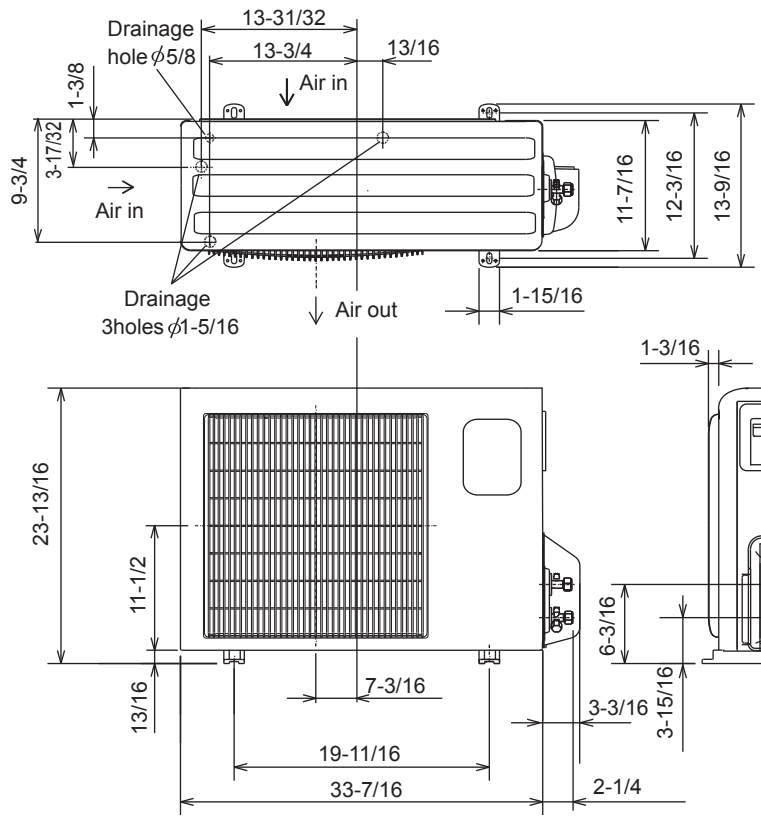

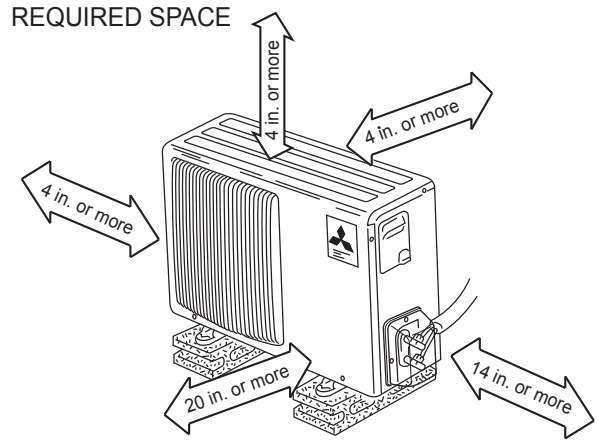

MUZ-GL09NA MUZ-GL09NAH MUY-GL09NA
MUZ-GL12NA MUZ-GL12NAH MUY-GL12NA
MUZ-GL15NA MUZ-GL15NAH MUY-GL15NA

Unit: inch

REQUIRED SPACE

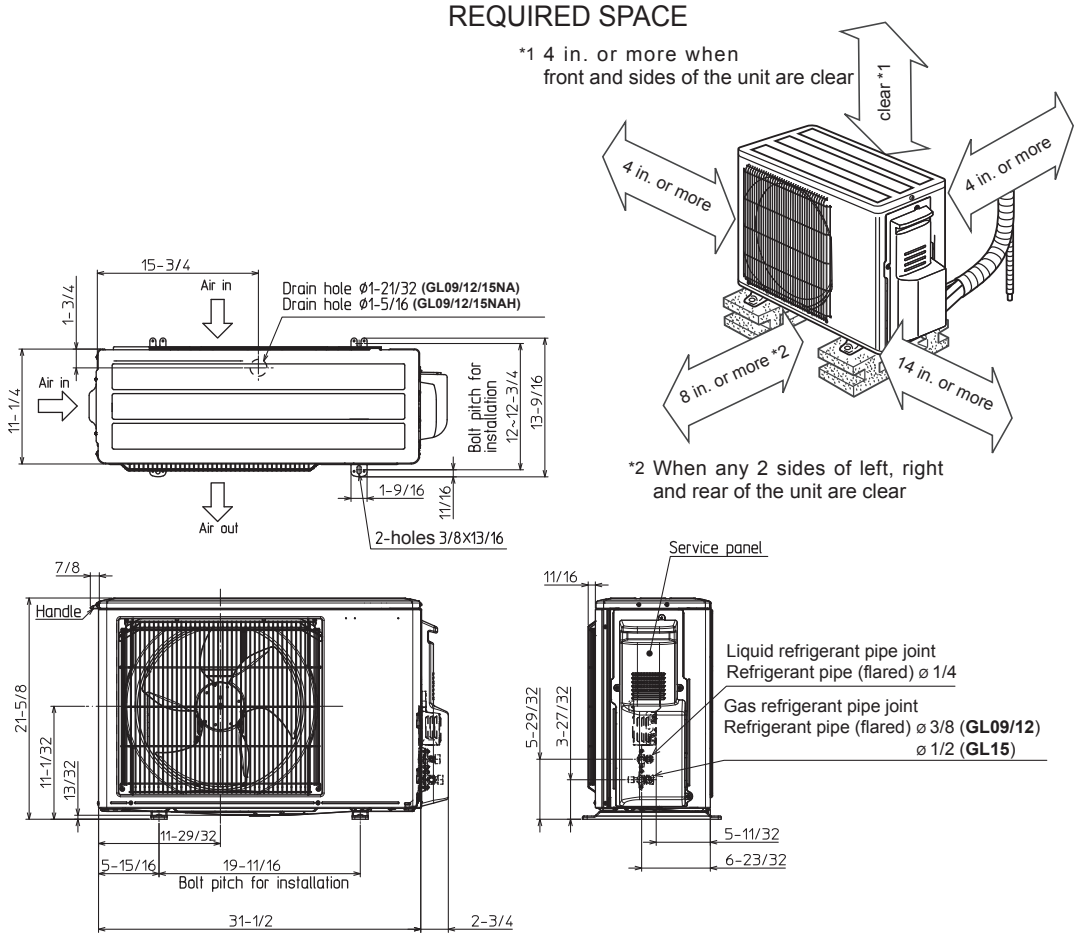

MUZ-GL18NA MUZ-GL18NAH MUY-GL18NA
MUZ-GL24NA MUZ-GL24NAH MUY-GL24NA

Unit: inch

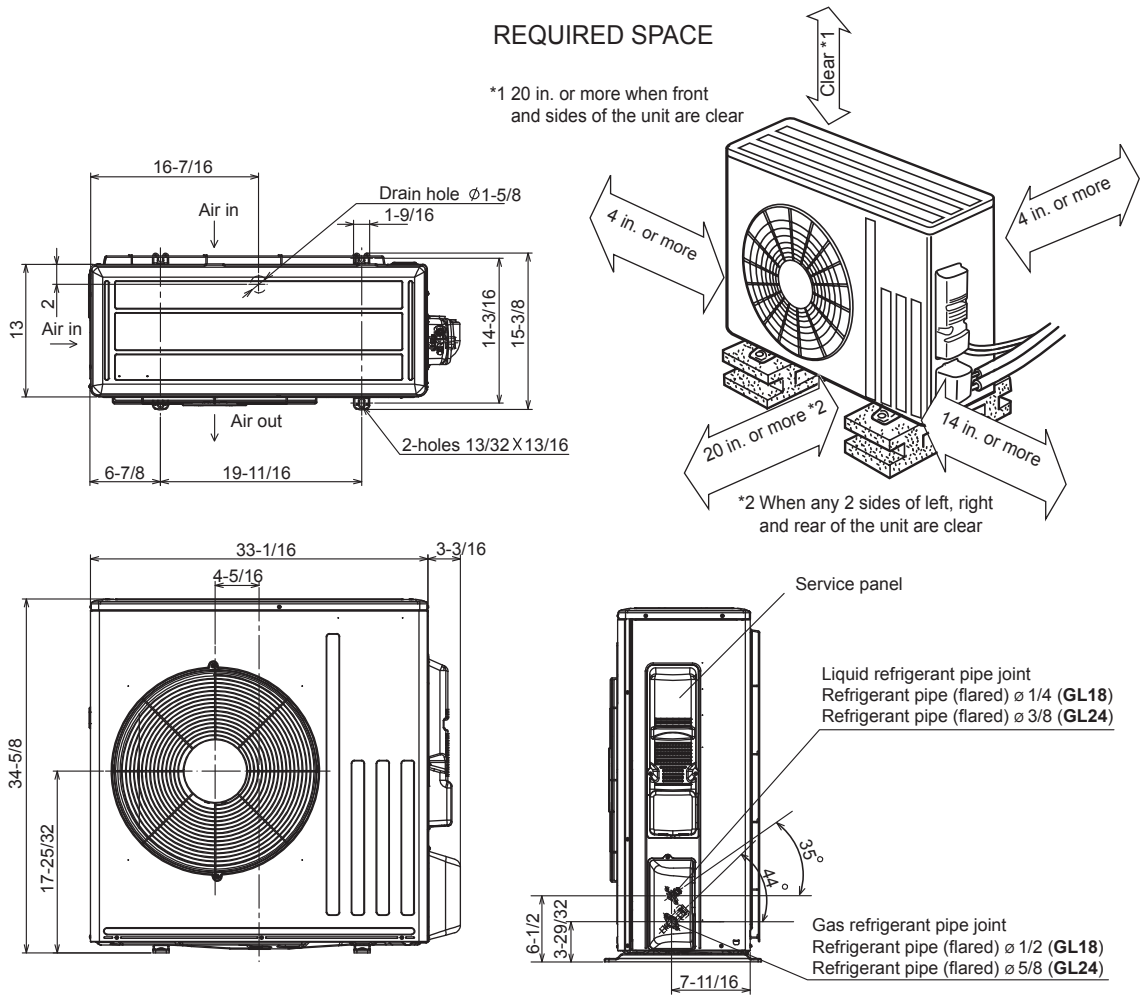

MUZ-HM09NA MUZ-HM12NA MUZ-HM15NA MUZ-HM18NA

Unit: inch

REQUIRED SPACE

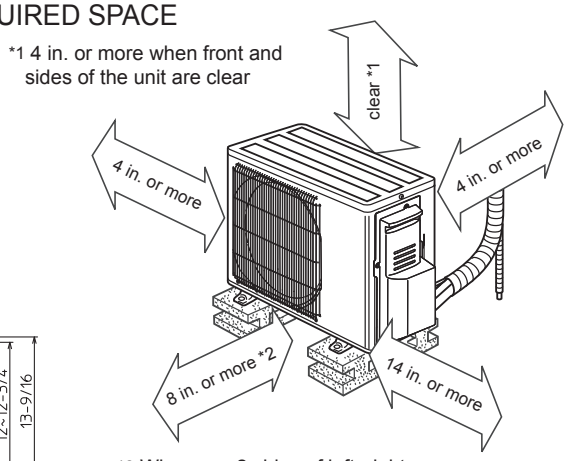

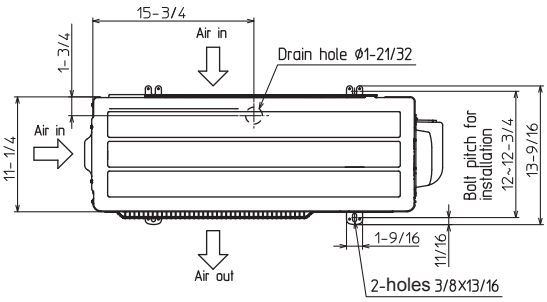

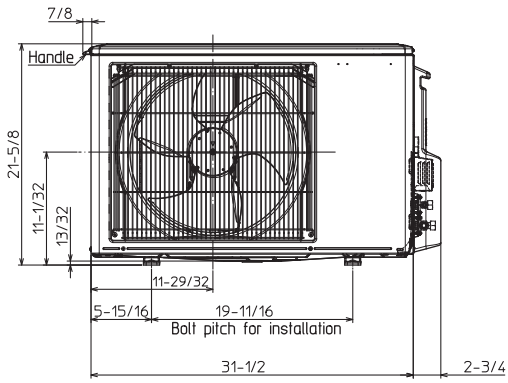

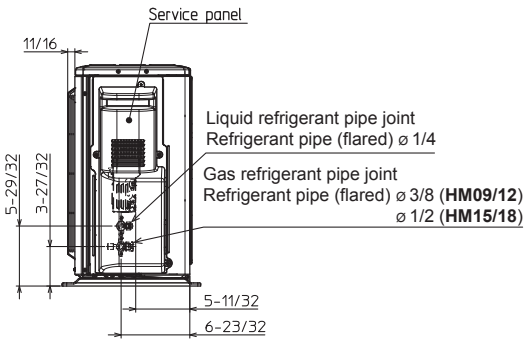

MUZ-HM24NA

Unit: inch

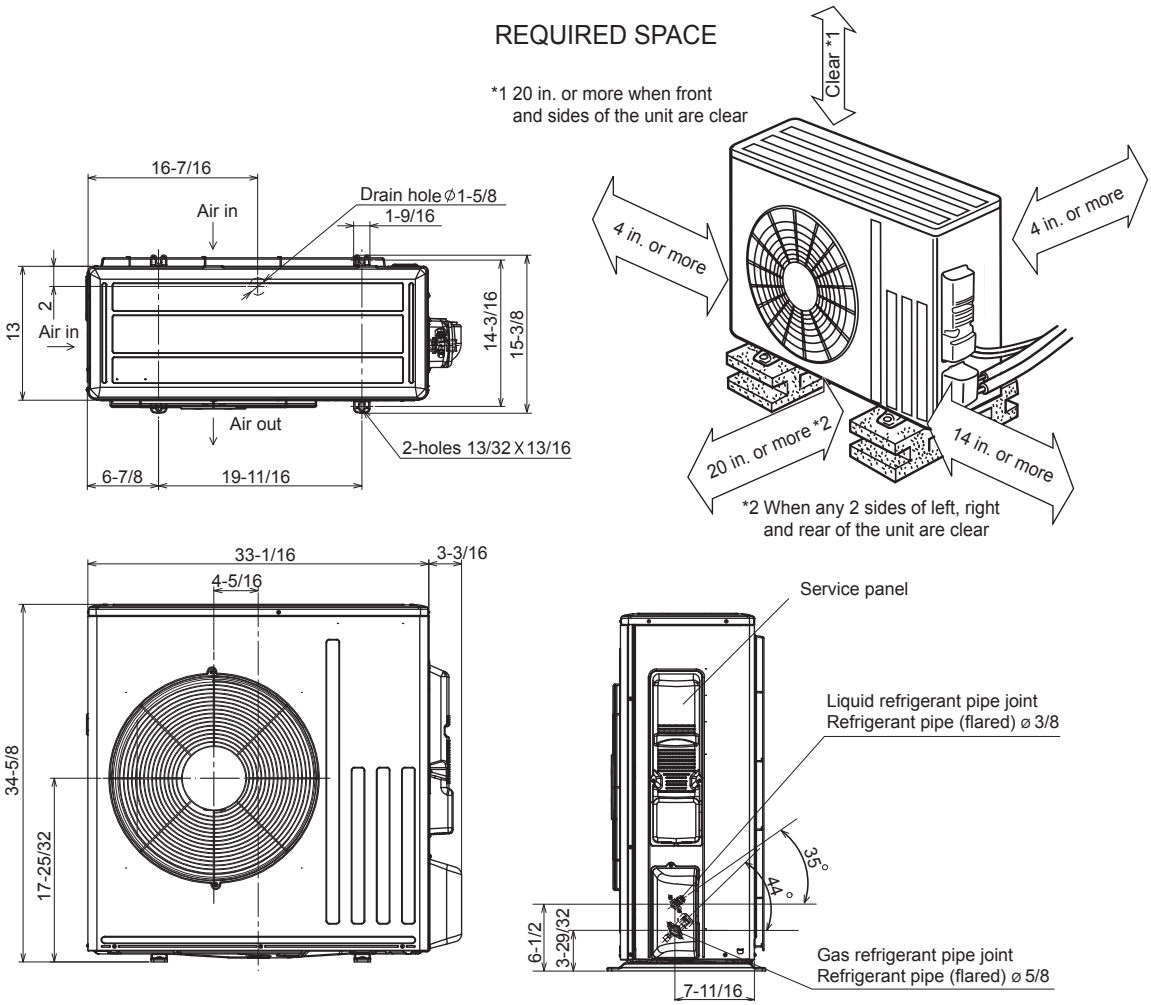

MUZ-FH06NA MUZ-FH09NA MUZ-FH12NA
MUZ-FH06NAH MUZ-FH09NAH MUZ-FH12NAH

Unit: inch

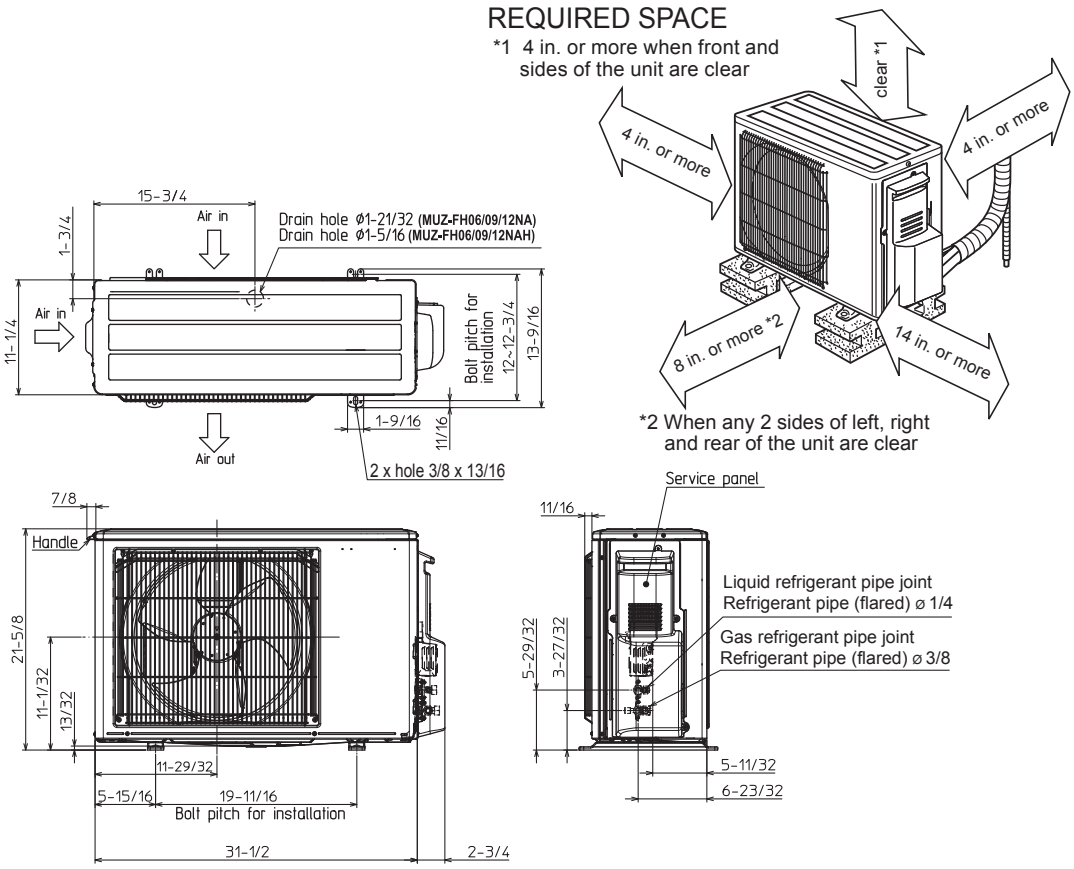

MUZ-FH15NA MUZ-FH15NAH MUZ-FH18NA2 MUZ-FH18NAH2

Unit: inch

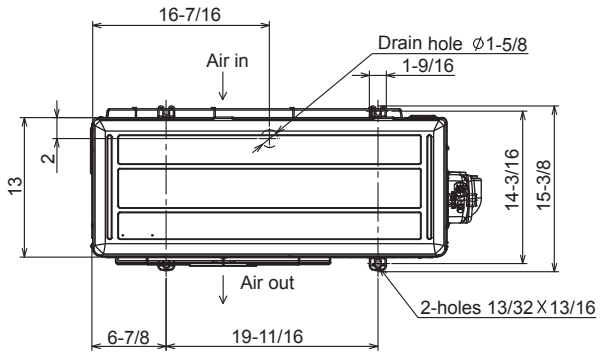

REQUIRED SPACE

*1 20 in. or more when front and sides of the unit are clear

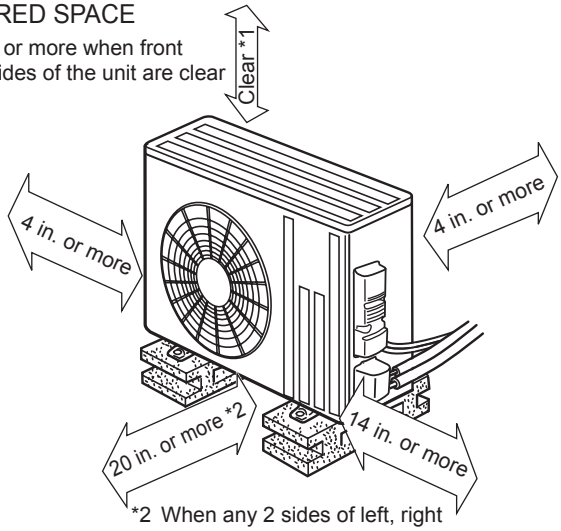

*2 When any 2 sides of left, right and rear of the unit are clear

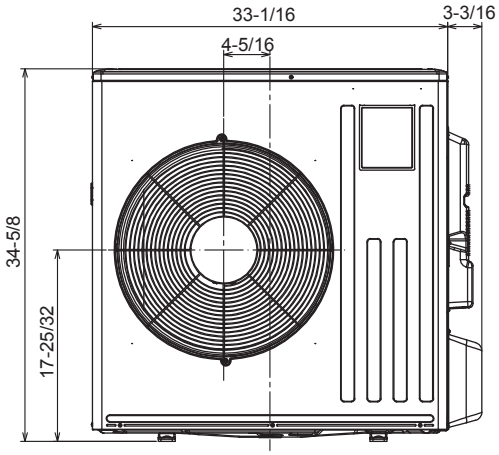

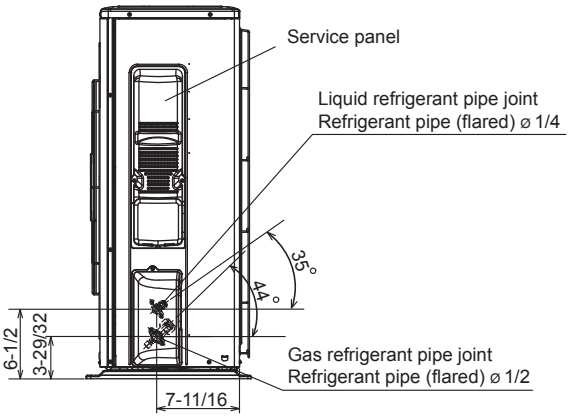

MUZ-FE09NAH MUZ-FE12NAH

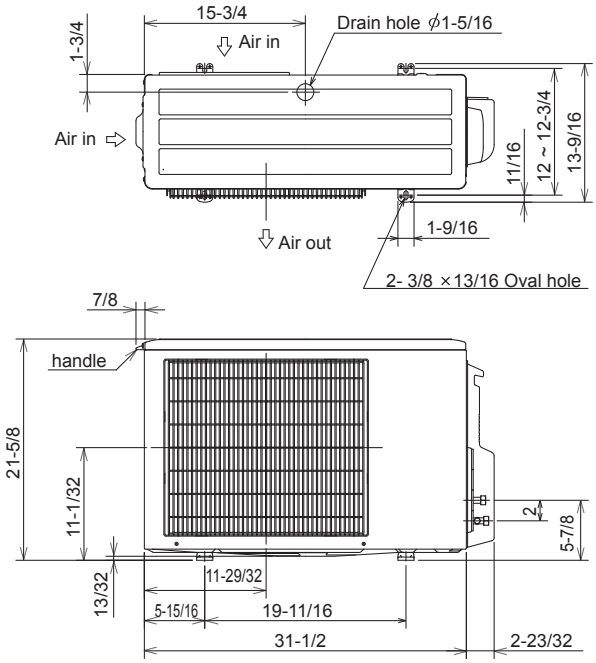

REQUIRED SPACE

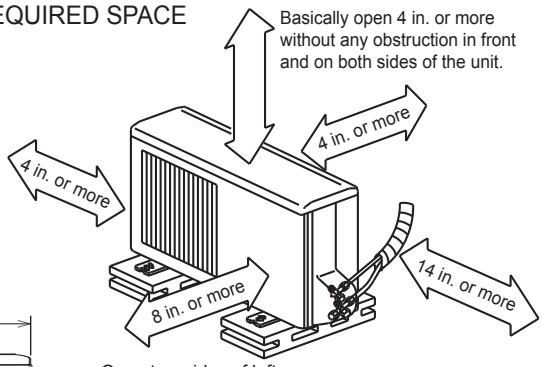

Open two sides of left, right, or rear side.

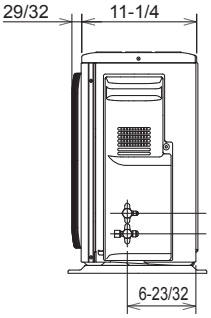

Liquid pipe :1/4 (flared)
Gas pipe :3/8 (flared)

MUZ-D30NA MUZ-D36NA MUY-D30NA MUY-D36NA

Unit: inch

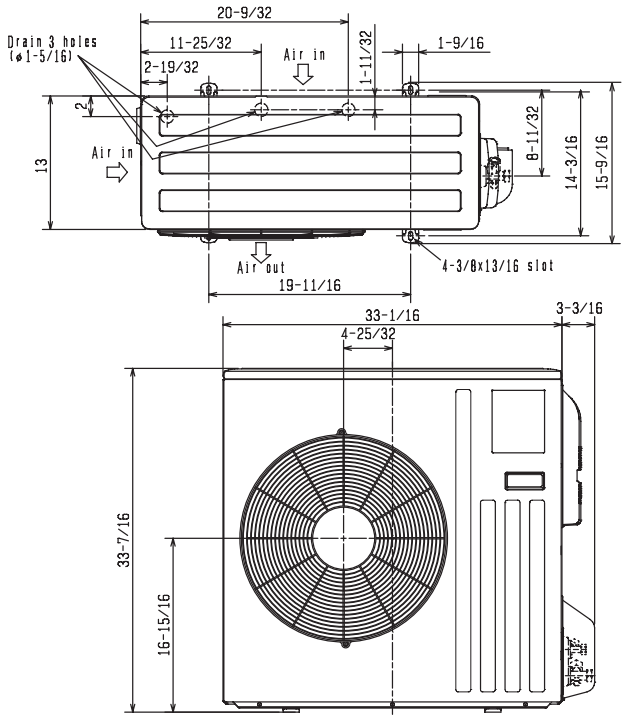

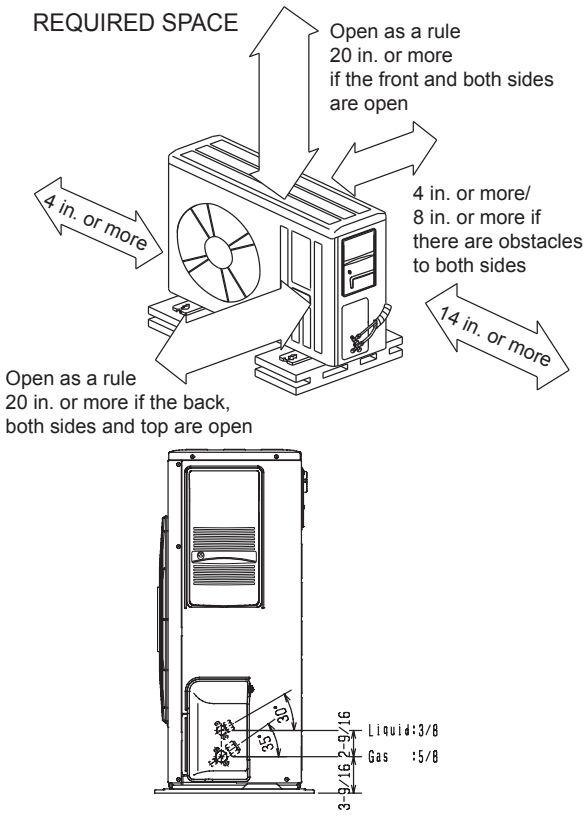

SUZ-KA09NA SUZ-KA12NA SUZ-KA15NA

Unit: inch

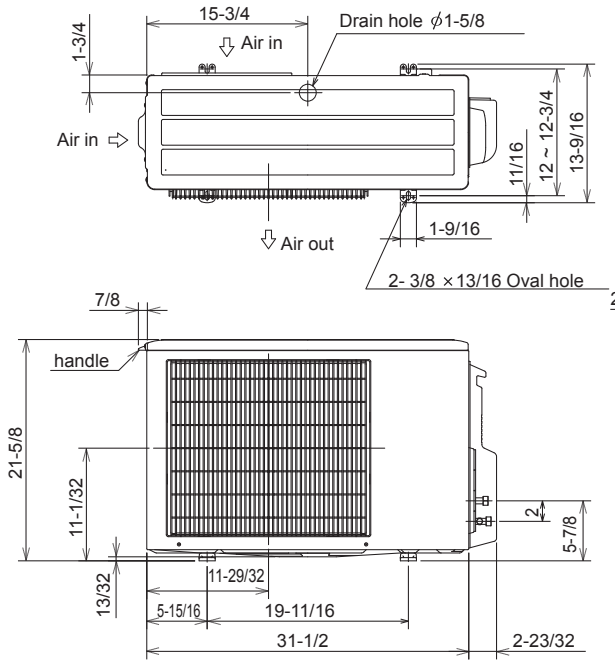

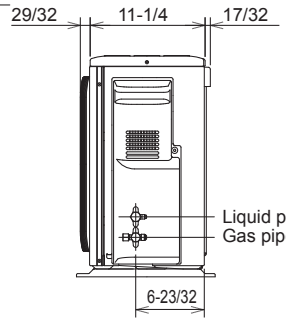

Liquid pipe :1/4 (flared)
Gas pipe :3/8 (flared) **(KA09/12)**
1/2 (flared) **(KA15)**

REQUIRED SPACE

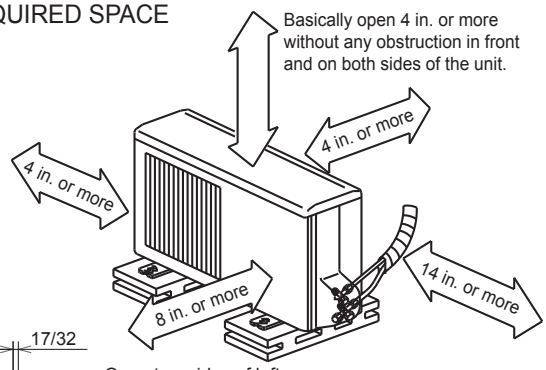

Open two sides of left, right, or rear side.

SUZ-KA18NA

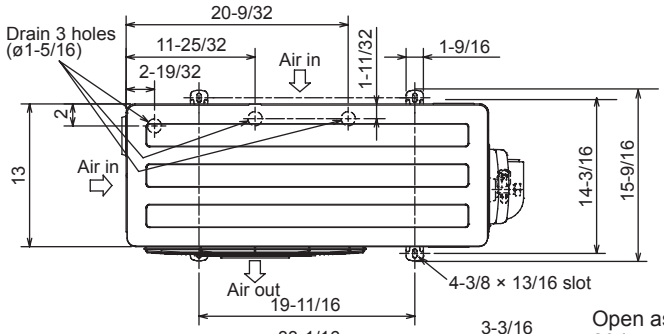

REQUIRED SPACE

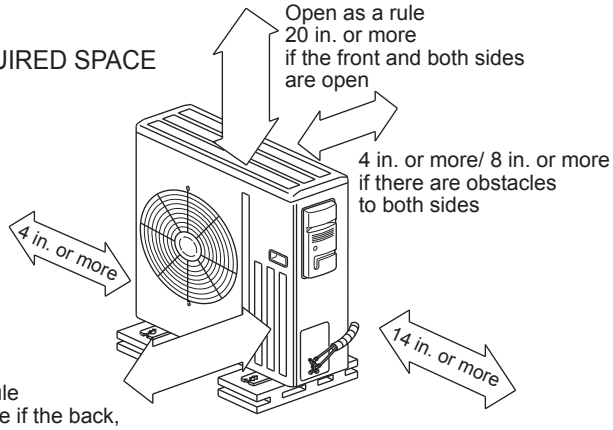

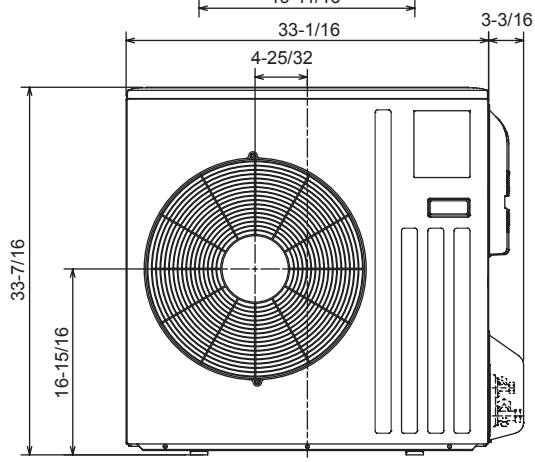

Open as a rule 20 in. or more if the back, both sides and top are open

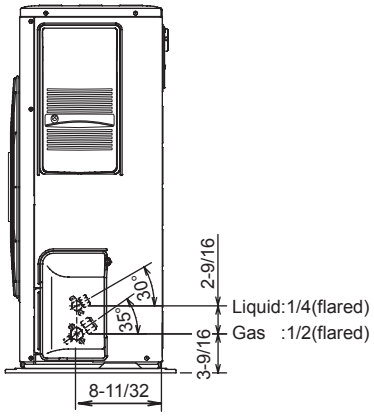

Liquid:1/4(flared)
Gas :1/2(flared)

MUFZ-KJ09NAHZ MUFZ-KJ12NAHZ

Unit: inch

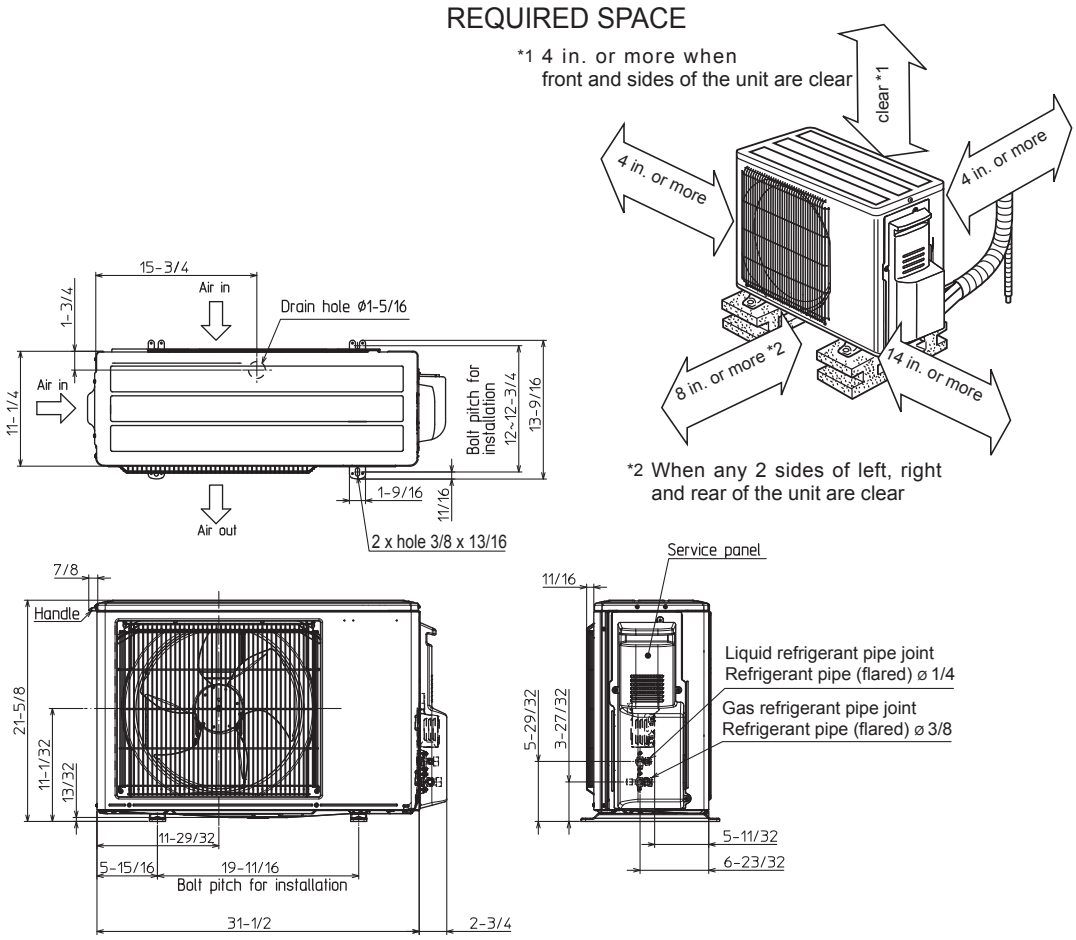

MUFZ-KJ15NAHZ MUFZ-KJ18NAHZ

Unit: inch

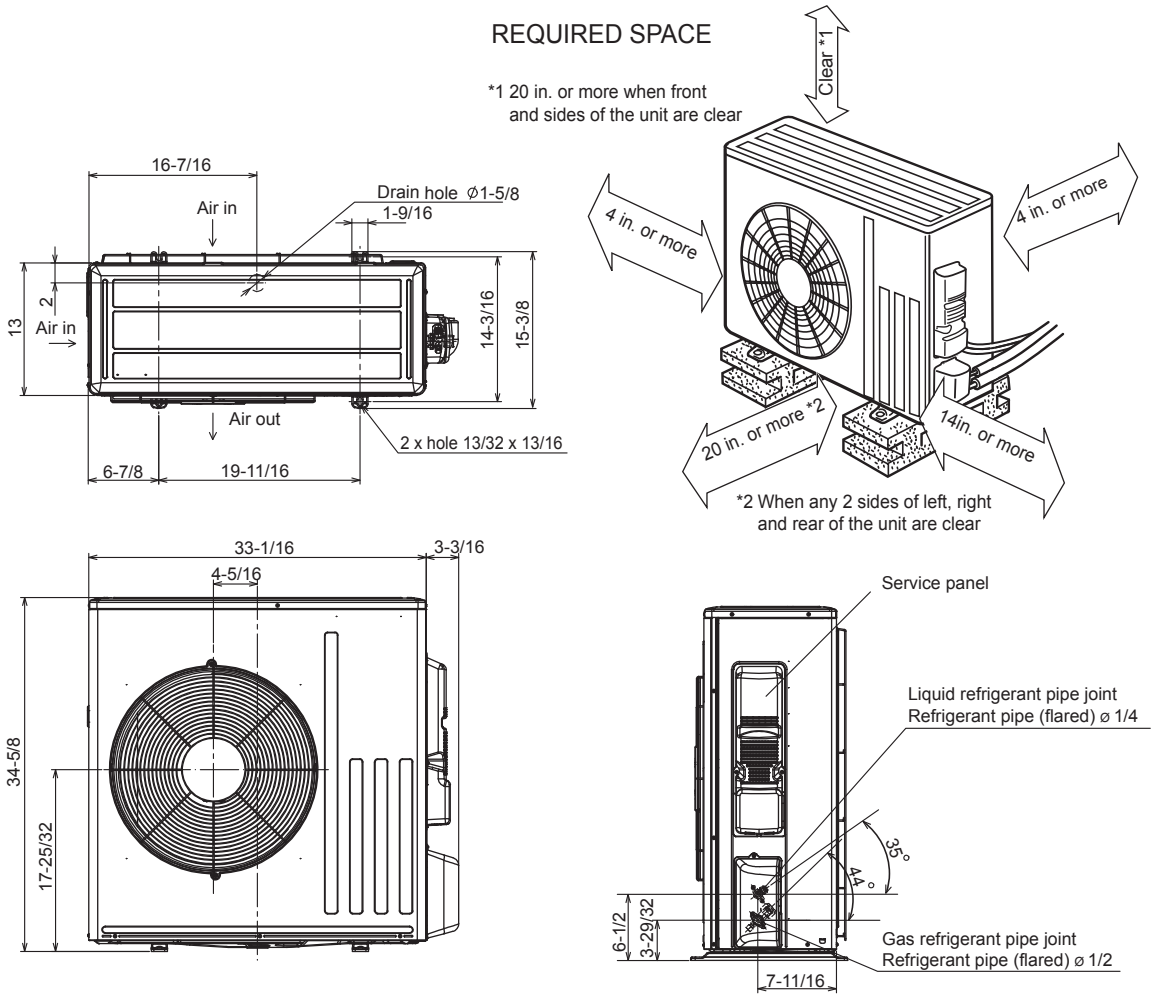

4 POSITION OF THE CENTER OF GRAVITY

4-1. INDOOR UNIT

Wall-mounted type

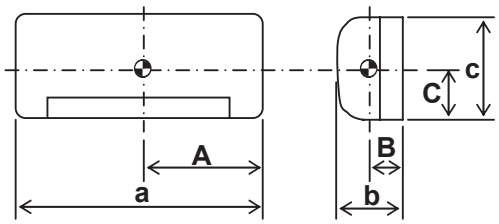

Unit: inch(mm)

Model name	A	B	C	a	b	c
MS-A09WA MS-A12WA	13 (330)	3-1/2 (90)	5-7/8 (150)	30-11/16 (780)	8-1/4 (210)	11-3/4 (298)
MSZ-GL06NA MSZ-GL09NA MSZ-GL12NA MSZ-GL15NA MSY-GL09NA MSY-GL12NA MSY-GL15NA	13-3/8 (340)	3-3/4 (95)	7-1/2 (190)	31-3/8 (798)	9-1/8 (232)	11-5/8 (295)
MSZ-HM09NA MSZ-HM12NA MSZ-HM15NA						
MSZ-GL18NA MSY-GL18NA	15-1/4 (387)	4-7/16 (113)	6-1/4 (159)	36-5/16 (923)	9-13/16 (250)	12 (305)
MSZ-HM18NA MSZ-HM24NA						
MSZ-EF09NAW/B/S MSZ-EF12NAW/B/S MSZ-EF15NAW/B/S MSZ-EF18NAW/B/S	14-1/2 (369)	3-15/16 (100)	5-5/8 (143)	34-13/16 (885)	7-11/16 (195)	11-3/4 (299)
MSZ-GL24NA MSY-GL24NA	17-7/16 (443)	3-7/8 (98)	5-9/16 (141)	43-5/16 (1100)	9-3/8 (238)	12-13/16 (325)
MSZ-FH06NA MSZ-FH09NA MSZ-FH12NA MSZ-FH15NA MSZ-FH18NA2	15-1/4 (387)	4-1/4 (108)	6-1/8 (155)	36-7/16 (925)	9-3/16 (234)	12 (305)
MSZ-FE09NA MSZ-FE12NA	13 (330)	3-7/16 (86)	7-5/16 (185)	31-3/8 (798)	10-1/8 (257)	11-5/8 (295)
MSZ-D30NA MSZ-D36NA MSY-D30NA MSY-D36NA	18-1/8 (460)	7-1/2 (190)	7-1/2 (190)	46-1/16 (1170)	11-5/8 (295)	14-3/8 (365)

Ceiling-concealed type

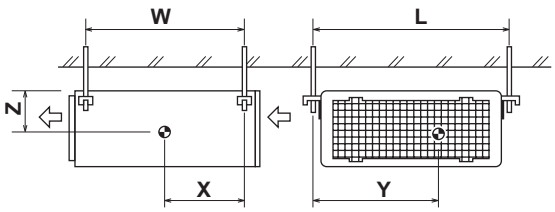

Unit: inch(mm)

Model name	W	L	X	Y	Z
SEZ-KD09NA4	24-5/8 (625)	29-5/8 (752)	10-3/8 (263)	13-27/32 (351)	4-3/16 (106)
SEZ-KD12NA4	24-5/8 (625)	37-1/2 (952)	11-9/32 (286)	17-21/32 (448)	4-1/8 (104)
SEZ-KD15NA4	24-5/8 (625)	37-1/2 (952)	11-1/32 (280)	17-7/32 (437)	4-1/8 (104)
SEZ-KD18NA4	24-5/8 (625)	45-3/8 (1152)	11-1/4 (285)	20-3/4 (527)	4-1/8 (104)

Ceiling-cassette type

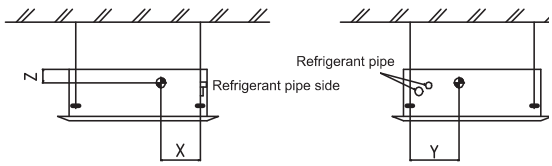

Unit: inch(mm)

Model name	X	Y	Z
SLZ-KA09NA	5-29/32 (150)	10-1/4 (260)	4-5/32 (105)
SLZ-KA12NA	5-29/32 (150)	10-1/4 (260)	4-5/32 (105)
SLZ-KA15NA	5-29/32 (150)	10-1/4 (260)	4-5/32 (105)

Ceiling-concealed type

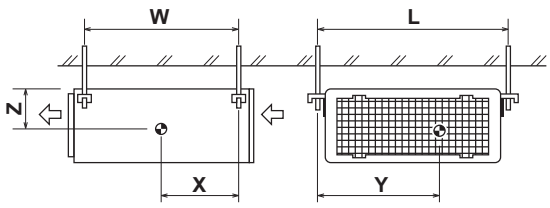

Unit: inch(mm)

Model name	W	L	X	Y	Z
PEAD-A09AA7	25-5/16 (643)	37-9/16 (954)	13-3/8 (340)	14-3/4 (375)	5-1/8 (130)
PEAD-A12AA7	25-5/16 (643)	37-9/16 (954)	13-3/8 (340)	14-3/4 (375)	5-1/8 (130)
PEAD-A15AA7	25-5/16 (643)	37-9/16 (954)	13-3/8 (340)	14-3/4 (375)	5-1/8 (130)
PEAD-A18AA7	25-5/16 (643)	37-9/16 (954)	13-3/8 (340)	14-3/4 (375)	5-1/8 (130)

Multi position

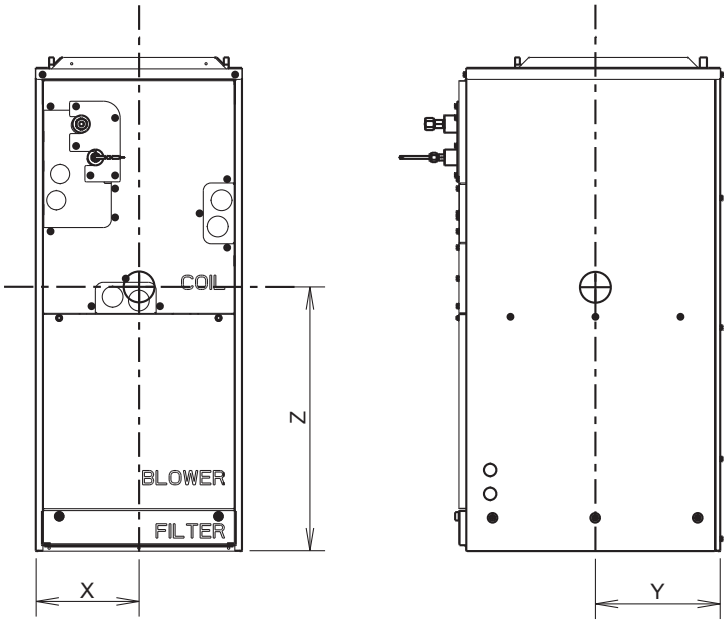

Unit: inch (mm)

Model name	X	Y	Z
SVZ-KP12NA SVZ-KP18NA	8-1/2 (216)	11 (279)	19-1/2 (495)

Floor standing type

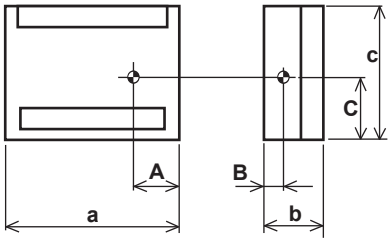

Unit: inch (mm)

Model name	A	B	C	a	b	c
MFZ-KJ09NA MFZ-KJ12NA MFZ-KJ15NA MFZ-KJ18NA	12-3/4 (324)	4 (102)	13-7/8 (353)	29-17/32 (750)	8-15/32 (215)	23-5/8 (600)

4-2. OUTDOOR UNIT

Unit: inch(mm)

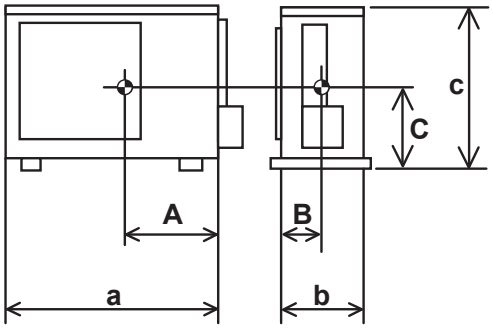

Model name	A	B	C	a	b	c
MU-A09WA MUZ-GL09NA MUZ-GL12NA MUZ-GL15NA MUZ-GL09NAH MUZ-GL12NAH MUZ-GL15NAH MUY-GL09NA MUY-GL12NA MUY-GL15NA MUZ-HM09NA2 MUZ-HM12NA2 MUZ-HM15NA2 MUZ-HM18NA2 MUZ-FH06NA MUZ-FH09NA MUZ-FH12NA MUZ-FH06NAH MUZ-FH09NAH MUZ-FH12NAH MUZ-FE09NAH MUZ-FE12NAH SUZ-KA09NA SUZ-KA12NA SUZ-KA15NA MUFZ-KJ09NAHZ MUFZ-KJ12NAHZ	11-1/16 (280)	5-9/16 (140)	9-1/2 (240)	31-1/2 (800)	11-1/4 (285)	21-5/8 (550)
MU-A12WA	11-13/16 (300)	5-1/4 (133)	10-3/8 (263)	33-7/16 (850)	11-7/16 (290)	23-13/16 (605)
MUZ-GL24NA MUZ-GL24NAH MUY-GL24NA MUZ-HM24NA2 MUZ-FH15NA MUZ-FH15NAH MUZ-FH18NA2 MUZ-FH18NAH2 MUZ-GL18NA MUZ-GL18NAH MUY-GL18NA MUFZ-KJ15NAHZ MUFZ-KJ18NAHZ	12-5/8 (320)	6-7/16 (163)	15-3/4 (400)	33-2/16 (840)	13 (330)	34-11/16 (880)
MUZ-D30NA MUZ-D36NA MUY-D30NA MUY-D36NA SUZ-KA18NA	11-13/16 (300)	5-7/8 (150)	13-3/8 (340)	33-2/16 (840)	13 (330)	33-7/16 (850)

5 WIRING DIAGRAM

5-1. INDOOR UNIT
MS-A09WA MS-A12WA

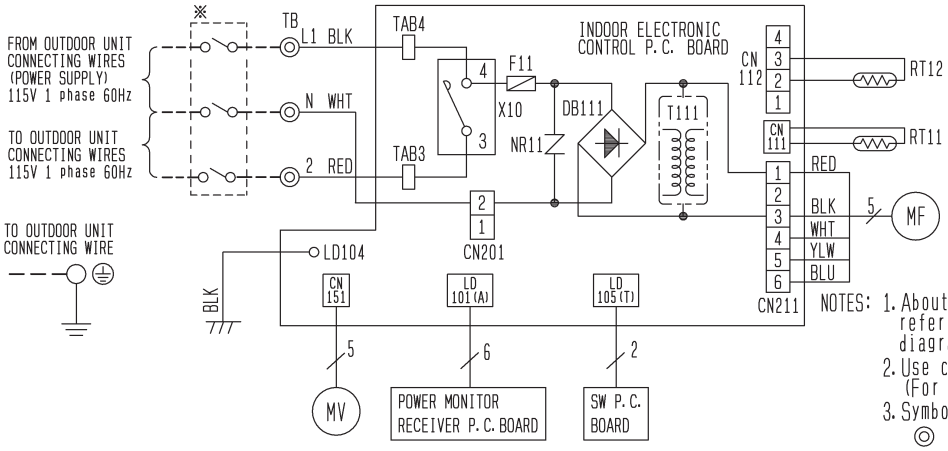

SYMBOL	NAME	SYMBOL	NAME
DB111	DIODE STACK	RT11	ROOM TEMP. THERMISTOR
F11	FUSE (T3.15AL250V)	RT12	COIL TEMP. THERMISTOR
MF	FAN MOTOR	T111	SWITCHING TRANSFORMER
MV	VANE MOTOR (HORIZONTAL)	TB	TERMINAL BLOCK
NR11	VARISTOR	X10	CONTACTOR

NOTES:
1. About the outdoor side electric wiring refer to the outdoor unit electric wiring diagram for servicing.
2. Use copper conductors only. (For field wiring)
3. Symbols below indicate.
   ◎ : Terminal block
   ▭ : Connector

※ A disconnect may be required by local code.

MSZ-GL06NA MSZ-GL09NA MSZ-GL12NA MSZ-GL15NA
MSY-GL09NA MSY-GL12NA MSY-GL15NA

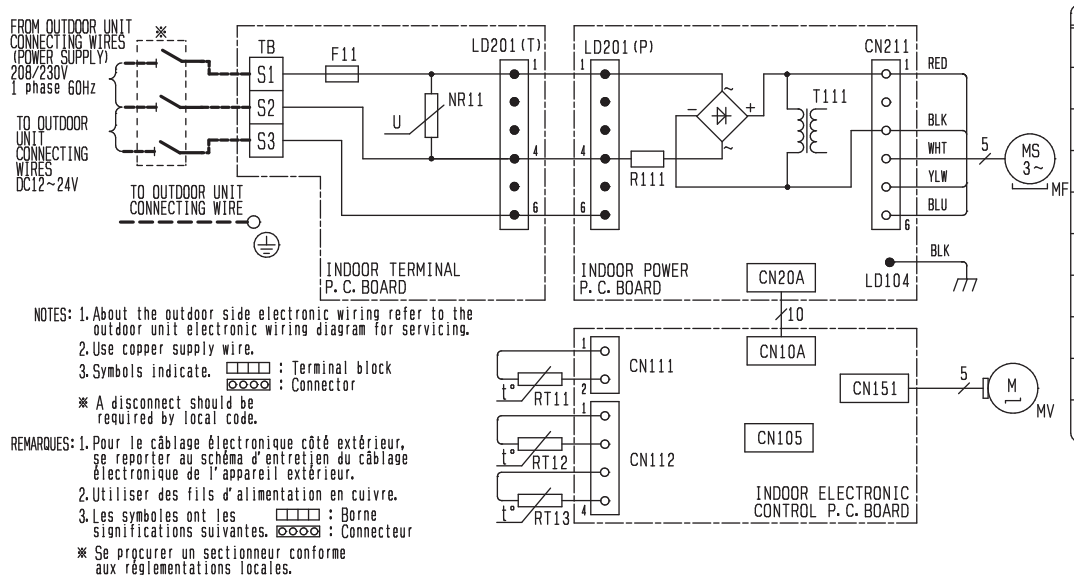

NOTES:
1. About the outdoor side electronic wiring refer to the outdoor unit electronic wiring diagram for servicing.
2. Use copper supply wire.
3. Symbols indicate. ▭ : Terminal block
   ▭ : Connector

※ A disconnect should be required by local code.

REMARQUES:
1. Pour le câblage électronique côté extérieur, se reporter au schéma d'entretien du câblage électronique de l'appareil extérieur.
2. Utiliser des fils d'alimentation en cuivre.
3. Les symboles ont les significations suivantes. ▭ : Borne ▭ : Connecteur

※ Se procurer un sectionneur conforme aux réglementations locales.

SYMBOL	NAME
F11	FUSE (T3.15AL250V)
MF	FAN MOTOR
MV	VANE MOTOR (HORIZONTAL)
NR11	VARISTOR
R111	RESISTOR
RT11	ROOM TEMP. THERMISTOR
RT12	COIL TEMP. THERMISTOR (MAIN)
RT13	COIL TEMP. THERMISTOR (SUB)
T111	TRANSFORMER
TB	TERMINAL BLOCK

MSZ-GL18NA MSY-GL18NA

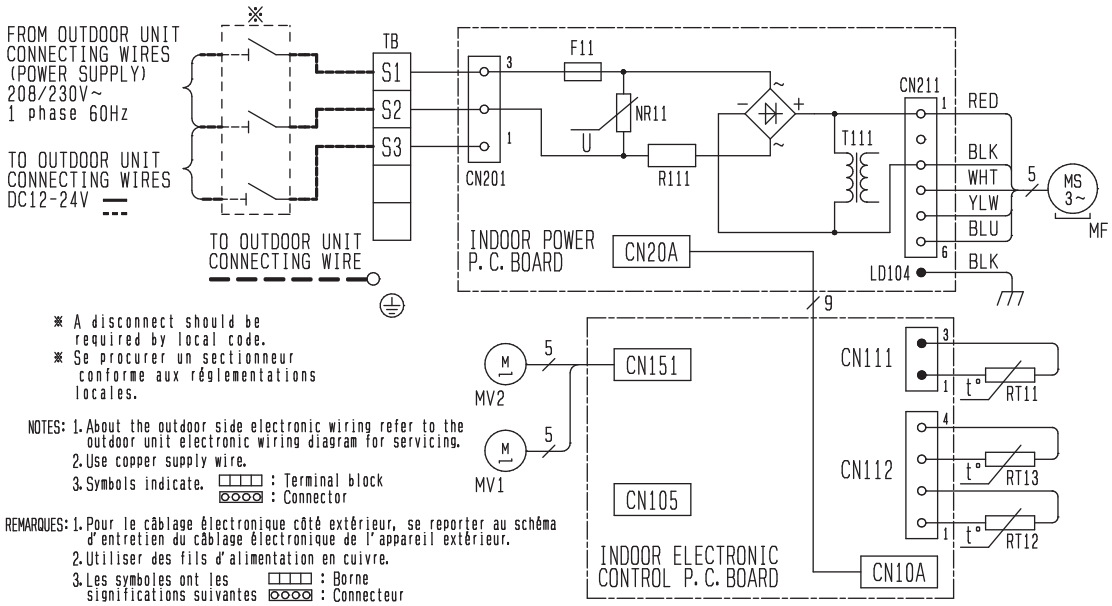

SYMBOL	NAME
F11	FUSE (T3. 15AL250V)
MF	FAN MOTOR
MV1	VANE MOTOR (HORIZONTAL)
MV2	VANE MOTOR (VERTICAL)
NR11	VARISTOR
R111	RESISTOR
RT11	ROOM TEMP. THERMISTOR
RT12	COIL TEMP. THERMISTOR (MAIN)
RT13	COIL TEMP. THERMISTOR (SUB)
T111	TRANSFORMER
TB	TERMINAL BLOCK

※ A disconnect should be required by local code.
※ Se procurer un sectionneur conforme aux réglementations locales.

NOTES: 1. About the outdoor side electronic wiring refer to the outdoor unit electronic wiring diagram for servicing.
2. Use copper supply wire.
3. Symbols indicate. ▭ : Terminal block
⊙ : Connector

REMARQUES: 1. Pour le câblage électronique côté extérieur, se reporter au schéma d'entretien du câblage électronique de l'appareil extérieur.
2. Utiliser des fils d'alimentation en cuivre.
3. Les symboles ont les significations suivantes ▭ : Borne
⊙ : Connecteur

MSZ-GL24NA MSY-GL24NA

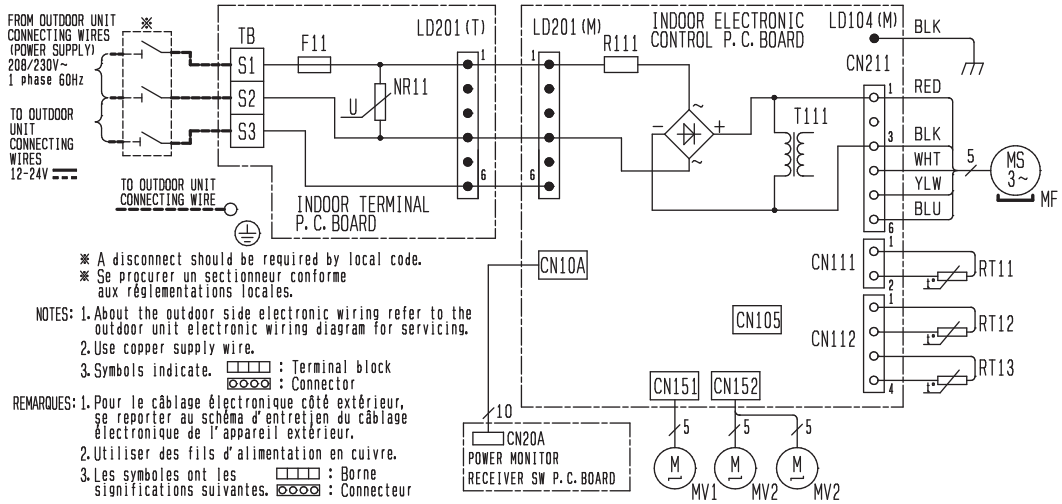

SYMBOL	NAME
F11	FUSE (T3. 15AL250V)
MF	FAN MOTOR
MV1	VANE MOTOR (HORIZONTAL)
MV2	VANE MOTOR (VERTICAL)
NR11	VARISTOR
R111	RESISTOR
RT11	ROOM TEMP. THERMISTOR
RT12	COIL TEMP. THERMISTOR (MAIN)
RT13	COIL TEMP. THERMISTOR (SUB)
T111	TRANSFORMER
TB	TERMINAL BLOCK

MSZ-HM09NA MSZ-HM12NA MSZ-HM15NA

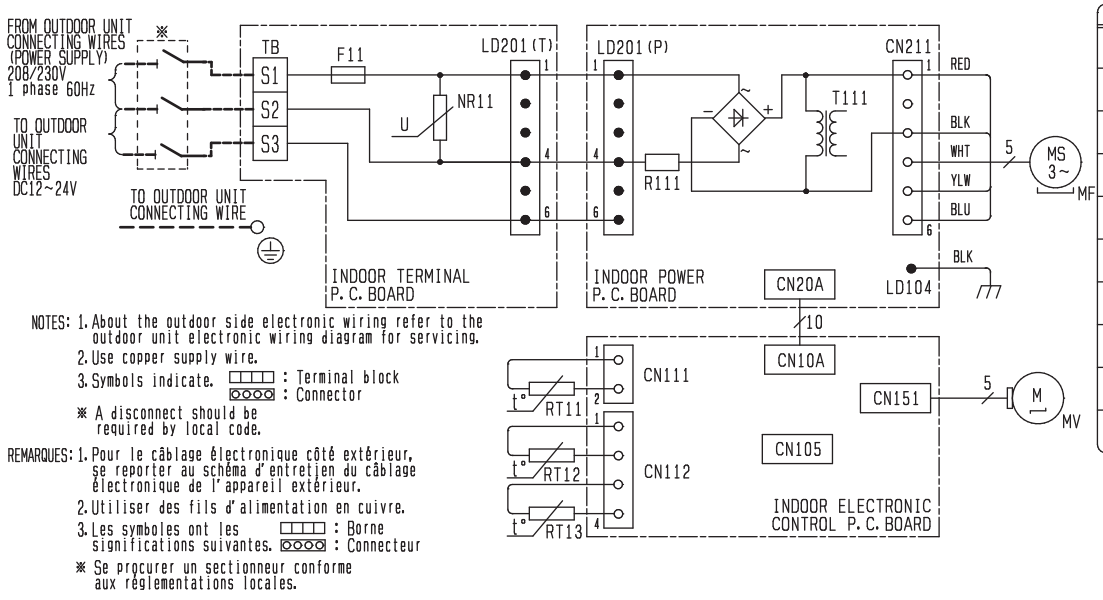

SYMBOL	NAME
F11	FUSE (T3. 15AL250V)
MF	FAN MOTOR
MV	VANE MOTOR (HORIZONTAL)
NR11	VARISTOR
R111	RESISTOR
RT11	ROOM TEMP. THERMISTOR
RT12	COIL TEMP. THERMISTOR (MAIN)
RT13	COIL TEMP. THERMISTOR (SUB)
T111	TRANSFORMER
TB	TERMINAL BLOCK

MSZ-HM18NA MSZ-HM24NA

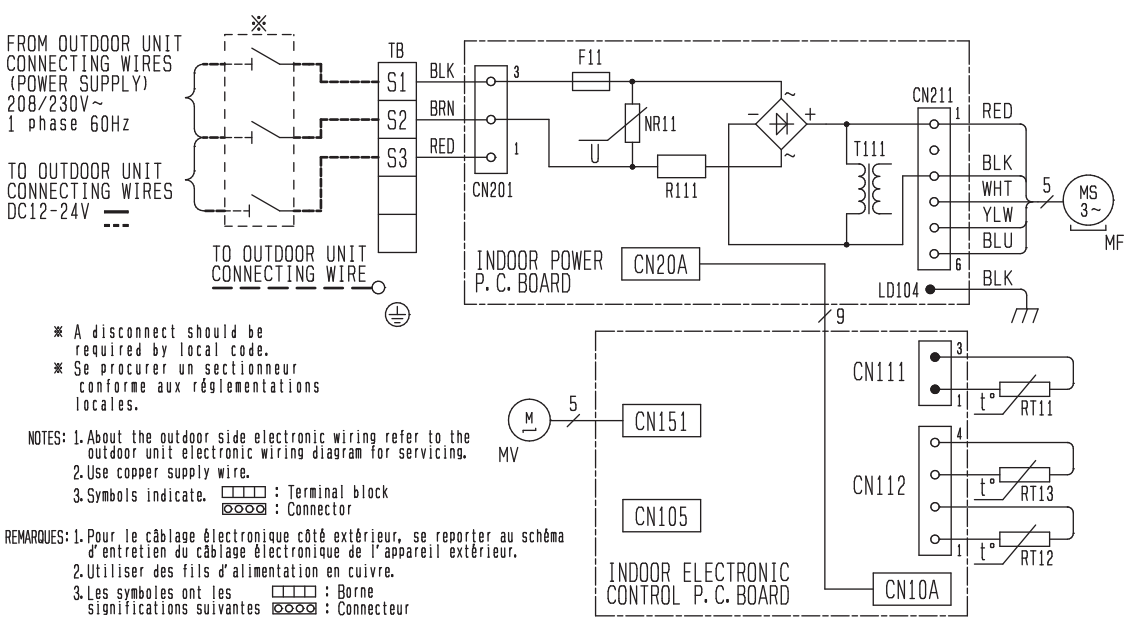

NOTES: 1. About the outdoor side electronic wiring refer to the outdoor unit electronic wiring diagram for servicing.
2. Use copper supply wire.
3. Symbols indicate. ▭ : Terminal block ⬭ : Connector

REMARQUES: 1. Pour le câblage électronique côté extérieur, se reporter au schéma d'entretien du câblage électronique de l'appareil extérieur.
2. Utiliser des fils d'alimentation en cuivre.
3. Les symboles ont les significations suivantes ▭ : Borne ⬭ : Connecteur

SYMBOL	NAME
F11	FUSE (T3. 15AL250V)
MF	FAN MOTOR
MV	VANE MOTOR (HORIZONTAL)
NR11	VARISTOR
R111	RESISTOR
RT11	ROOM TEMP. THERMISTOR
RT12	COIL TEMP. THERMISTOR (MAIN)
RT13	COIL TEMP. THERMISTOR (SUB)
T111	TRANSFORMER
TB	TERMINAL BLOCK

MSZ-FH06NA MSZ-FH09NA MSZ-FH12NA MSZ-FH15NA MSZ-FH18NA2

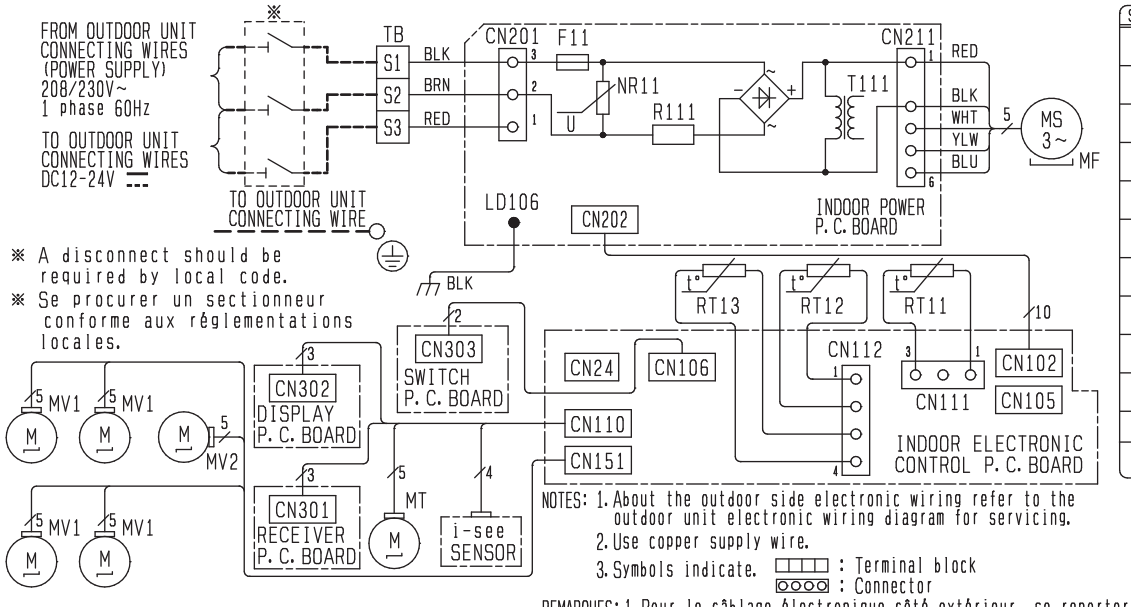

SYMBOL	NAME
F11	FUSE (T3. 15AL250V)
MF	FAN MOTOR
MV1	VANE MOTOR (HORIZONTAL)
MV2	VANE MOTOR (VERTICAL)
MT	i-see SENSOR MOTOR
NR11	VARISTOR
R111	RESISTOR
RT11	ROOM TEMP. THERMISTOR
RT12	COIL TEMP. THERMISTOR (MAIN)
RT13	COIL TEMP. THERMISTOR (SUB)
T111	TRANSFORMER
TB	TERMINAL BLOCK

NOTES: 1. About the outdoor side electronic wiring refer to the outdoor unit electronic wiring diagram for servicing.
2. Use copper supply wire.
3. Symbols indicate. ▭ : Terminal block ⬭ : Connector

REMARQUES: 1. Pour le câblage électronique côté extérieur, se reporter au schéma d'entretien du câblage électronique de l'appareil extérieur.
2. Utiliser des fils d'alimentation en cuivre.
3. Les symboles ont les significations suivantes ▭ : Borne ⬭ : Connecteur

MSZ-FE09NA MSZ-FE12NA

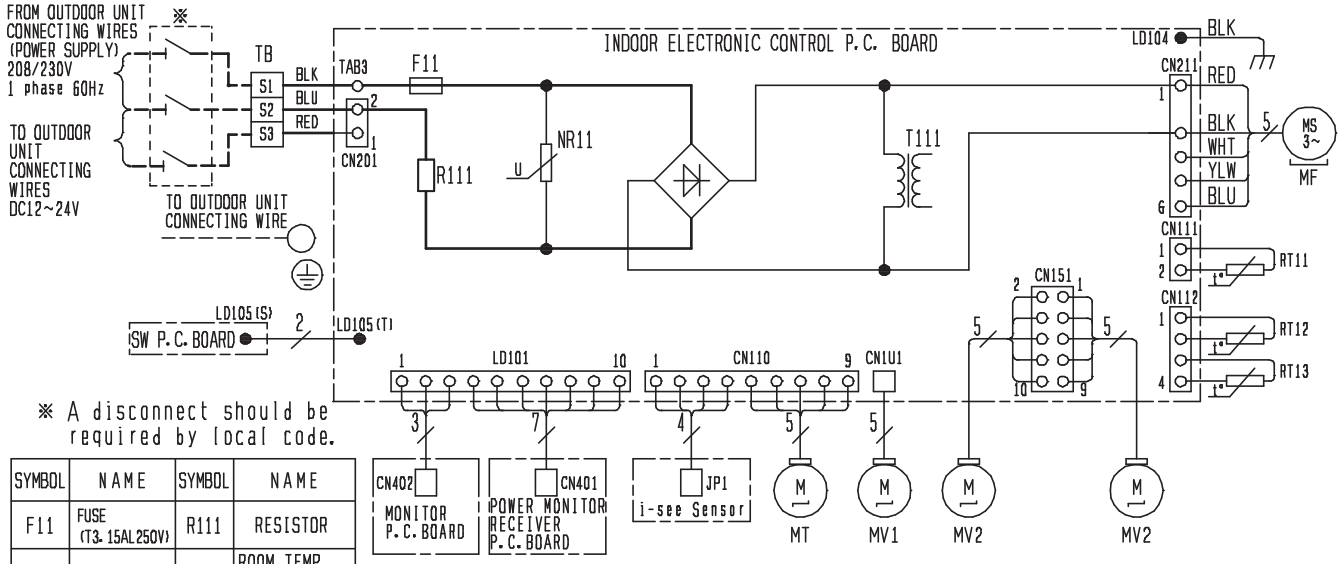

※ A disconnect should be required by local code.

SYMBOL	NAME	SYMBOL	NAME
F11	FUSE (T3.15AL250V)	R111	RESISTOR
MF	FAN MOTOR	RT11	ROOM TEMP. THERMISTOR
MT	i-see Sensor MOTOR	RT12	COIL TEMP. THERMISTOR (MAIN)
MV1	VANE MOTOR (HORIZONTAL)	RT13	COIL TEMP. THERMISTOR (SUB)
MV2	VANE MOTOR (VERTICAL)	T111	TRANSFORMER
NR11	VARISTOR	TB	TERMINAL BLOCK

NOTES:
1. About the outdoor side electric wiring refer to the outdoor unit electric wiring diagram for servicing.
2. Use copper conductors only. (For field wiring)
3. Symbols below indicate.
   ☐☐☐ : Terminal block
   ▭▭▭ : Connector

MSZ-D30NA MSZ-D36NA MSY-D30NA MSY-D36NA

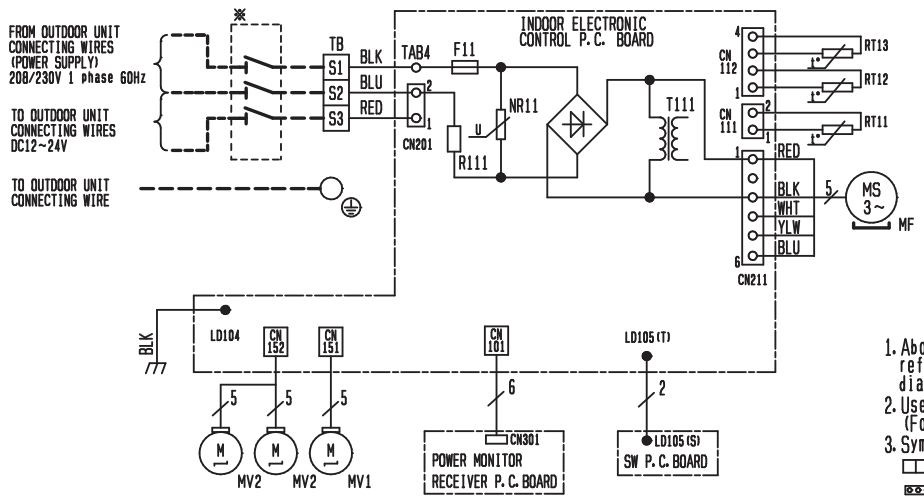

SYMBOL	NAME	SYMBOL	NAME
F11	FUSE (T3.15AL250V)	R111	RESISTOR
MF	FAN MOTOR	RT11	ROOM TEMP. THERMISTOR
MV1	VANE MOTOR (HORIZONTAL)	RT12	COIL TEMP. THERMISTOR (MAIN)
MV2	VANE MOTOR (VERTICAL)	RT13	COIL TEMP. THERMISTOR (SUB)
NR11	VARISTOR	T111	TRANSFORMER
		TB	TERMINAL BLOCK

1. About the outdoor side electric wiring refer to the outdoor unit electric wiring diagram for servicing.
2. Use copper conductors only. (For field wiring)
3. Symbols below indicate.
   ☐☐☐ : Terminal block
   ▭▭▭ : Connector

※ A disconnect should be required by local code.

SEZ-KD09NA4 SEZ-KD12NA4 SEZ-KD15NA4 SEZ-KD18NA4

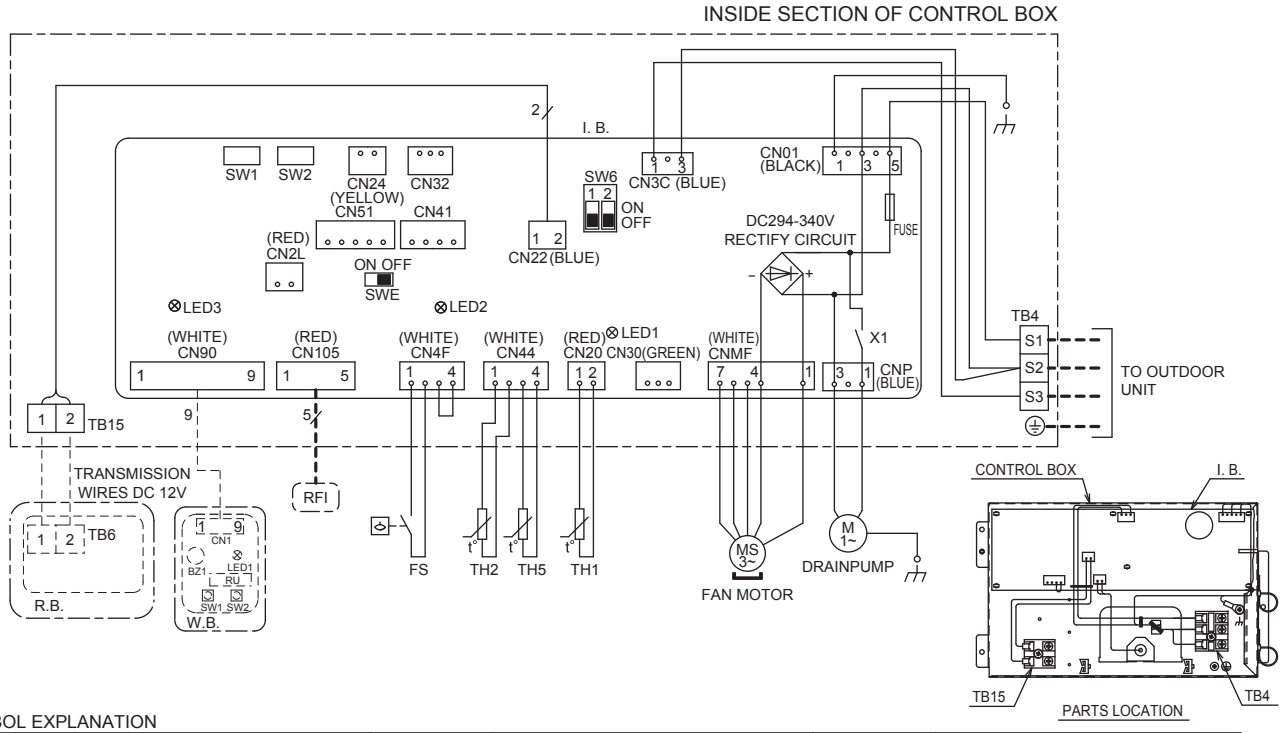

SYMBOL EXPLANATION

SYMBOL	NAME	SYMBOL	NAME	SYMBOL	NAME
I.B.	INDOOR CONTROLLER BOARD	I.B.	INDOOR CONTROLLER BOARD	OPTIONAL PARTS	
FUSE	FUSE AC250V 6.3A	SW1	SWITCH (FOR MODEL SELECTION)	W.B.	IR WIRELESS REMOTE CONTROLLER BOARD
X1	AUX. RELAY	SW2	SWITCH (FOR CAPACITY CODE)	RU	RECEIVING UNIT
CN2L	CONNECTOR (LOSSNAY)	SW6	SWITCH (FOR EMERGENCY OPERATION))	BZ1	BUZZER
CN24	CONNECTOR (BACK-UP HEATING)	SWE	CONNECTOR (EMERGENCY OPERATION)	LED1	LED (RUN INDICATOR)
CN30	CONNECTOR (LLC)	TH1	INTAKE AIR TEMP. THERMISTOR	SW1	SWITCH (HEATING ON/OFF)
CN32	CONNECTOR (REMOTE SWITCH)	TH2	PIPE TEMP. THERMISTOR/LIQUID	SW2	SWITCH (COOLING ON/OFF)
CN41	CONNECTOR (HA TERMINAL-A)	TH5	COND./EVA. TEMP. THERMISTOR	R.B.	REMOTE CONTROLLER BOARD
CN51	CONNECTOR (CENTRALLY CONTROL)	FS	FLOAT SWITCH	TB6	TERMINAL BLOCK (REMOTE CONTROLLER TRANSMISSION LINE)
CN90	CONNECTOR (WIRELESS)	TB4	TERMINAL BLOCK (INDOOR/OUTDOOR CONNECTING LINE)		
CN105	CONNECTOR (RADIO FREQUENCY INTERFACE)				
LED1	POWER SUPPLY (I.B.)	TB15	TERMINAL BLOCK (REMOTE CONTROLLER TRANSMISSION LINE)		
LED2	POWER SUPPLY (I.B.)				
LED3	TRANSMISSION (INDOOR-OUTDOOR)	RFI	RADIO FREQUENCY INTERFACE FOR RF THERMOSTAT		

Note1. Since the outdoor side electric wiring may change be sure to check the outdoor unit electric wiring for servicing.
2. Indoor and outdoor connecting wires are made with polarities,make wiring matchingterminal numbers (S1,S2,S3).
3. Symbols used in wiring diagram above are as follows.
:CONNECTOR
:TERMINAL
(HEAVY DOTTED LINE):FIELD WIRING
(THIN DOTTED LINE):OPTIONAL PARTS
4. Use copper supply wire.

SLZ-KA09NA SLZ-KA12NA SLZ-KA15NA

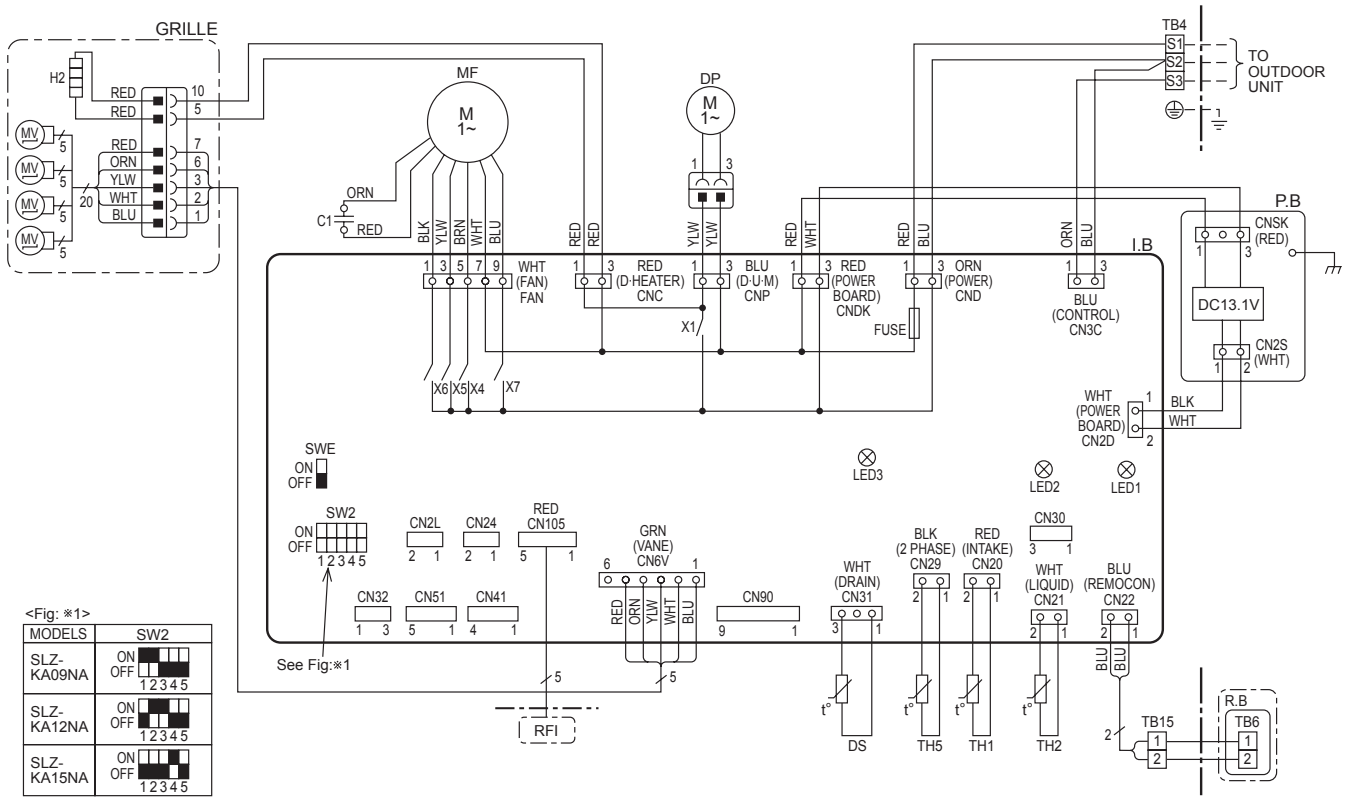

<Fig: ※1>

MODELS	SW2
SLZ-KA09NA	ON OFF 1 2 3 4 5
SLZ-KA12NA	ON OFF 1 2 3 4 5
SLZ-KA15NA	ON OFF 1 2 3 4 5

The black square (■) indicates a switch position.

[LEGEND]

SYMBOL	NAME	SYMBOL	NAME
P.B	INDOOR POWER BOARD	C1	CAPACITOR (FAN MOTOR)
I.B	INDOOR CONTROLLER BOARD	DP	DRAIN PUMP
CN2L	CONNECTOR (LOSSNAY)	DS	DRAIN SENSOR
CN24	CONNECTOR (BACK-UP HEATING)	RFI	RADIO FREQUENCY INTERFACE FOR RF THERMOSTAT
CN30	CONNECTOR (LLC)		
CN32	CONNECTOR (REMOTE SWITCH)	H2	DEW PREVENTION HEATER
CN41	CONNECTOR (HA TERMINAL-A)	MF	FAN MOTOR (WITH THERMAL FUSE)
CN51	CENTRALLY CONTROL	MV	VANE MOTOR
CN105	CONNECTOR (RADIO FREQUENCY INTERFACE)	TB4	TERMINAL BLOCK (INDOOR/OUTDOOR CONNECTING LINE)
FUSE	FUSE (T6.3AL250V)		
LED1	POWER SUPPLY (I.B)	TB15	TERMINAL BLOCK (REMOTE CONTROLLER TRANSMISSION LINE)
LED2	POWER SUPPLY (I.B)		
LED3	TRANSMISSION (INDOOR-OUTDOOR)	TH1	ROOM TEMP. THERMISTOR (32°F / 15kΩ, 77°F / 5.4kΩ DETECT)
SW2	SWITCH (CAPACITY CODE)		
SWE	SWITCH (EMERGENCY OPERATION)	TH2	PIPE TEMP. THERMISTOR/LIQUID (32°F / 15kΩ, 77°F / 5.4kΩ DETECT)
X1	DRAIN PUMP/DEW PREVENTION HEATER		
X4	RELAY (FAN MOTOR LL)	TH5	COND. / EVA. TEMP. THERMISTOR (32°F / 15kΩ, 77°F / 5.4kΩ DETECT)
X5	RELAY (FAN MOTOR Lo)		
X6	RELAY (FAN MOTOR Hi)	OPTION PART	
X7	RELAY (FAN MOTOR Me)	R.B	WIRED REMOTE CONTROLLER BOARD
		TB6	TERMINAL BLOCK (REMOTE CONTROLLER TRANSMISSION LINE)

NOTES:
1. Since the outdoor side electric wiring may change be sure to check the outdoor unit electric wiring for servicing.
2. Indoor and outdoor connecting wires are made with polarities, make wiring matching terminal numbers (S1, S2, S3).
3. Use copper supply wires.
4. Symbols used in wiring diagram above are, ▭: Connector, ▭▭▭ : Terminal (block).

※For details on how to operate self-diagnosis refer to the technical manuals etc.

PEAD-A09AA7 PEAD-A12AA7 PEAD-A15AA7 PEAD-A18AA7

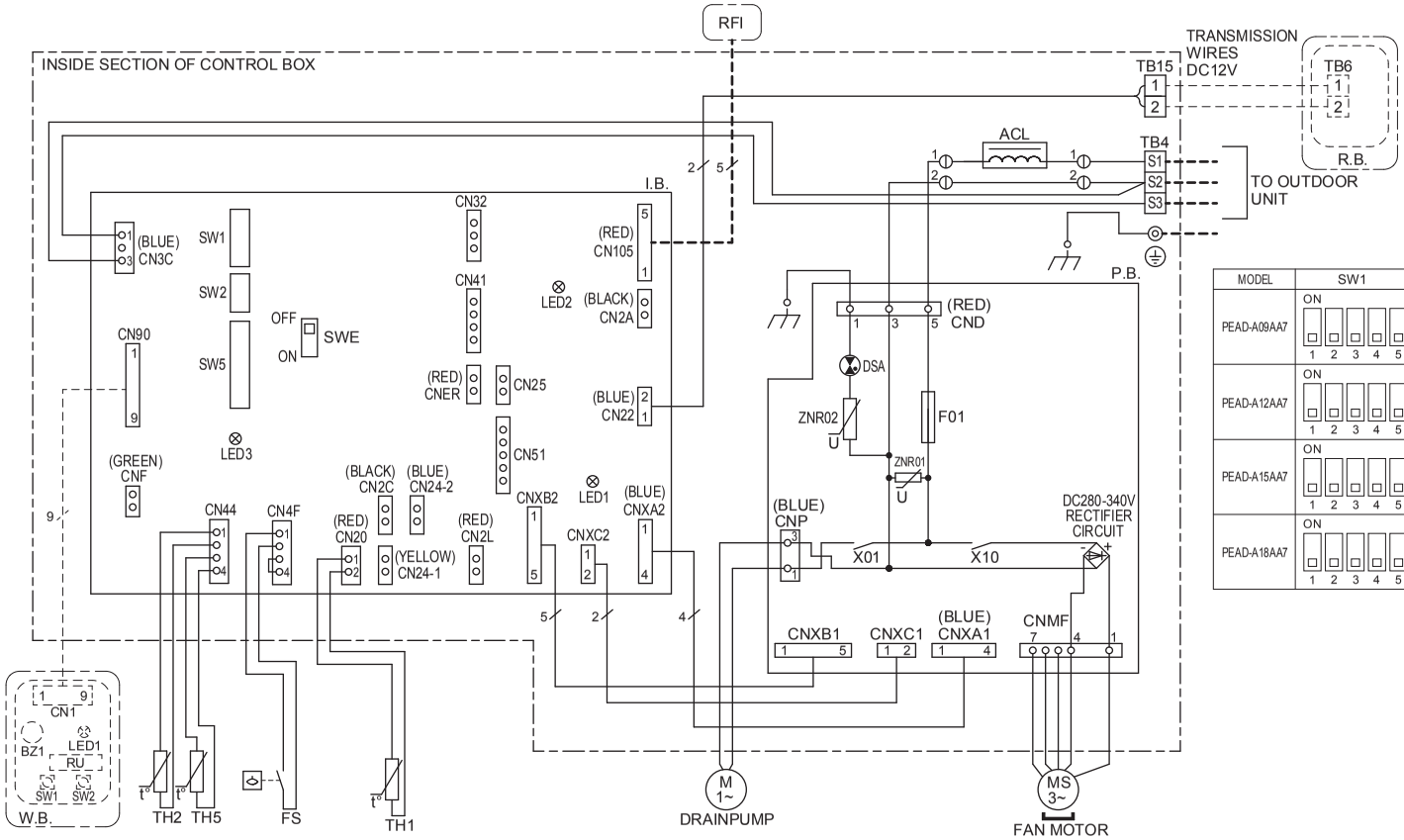

MODEL	SW1	SW2	SW5
PEAD-A09AA7	ON 1 2 3 4 5	ON 1 2 3 4 5	ON 1 2 3 4 5 6 7 8
PEAD-A12AA7	ON 1 2 3 4 5	ON 1 2 3 4 5	ON 1 2 3 4 5 6 7 8
PEAD-A15AA7	ON 1 2 3 4 5	ON 1 2 3 4 5	ON 1 2 3 4 5 6 7 8
PEAD-A18AA7	ON 1 2 3 4 5	ON 1 2 3 4 5	ON 1 2 3 4 5 6 7 8

SYMBOL EXPLANATION

SYMBOL	NAME
I.B.	INDOOR CONTROLLER BOARD
CN24-1	CONNECTOR (HEATER CONTROL 1ST)
CN24-2	CONNECTOR (HEATER CONTROL 2ND)
CN25	CONNECTOR (HUMIDITY OUTPUT)
CN2A	CONNECTOR (0-10V ANALOG INPUT)
CN2C	CONNECTOR (ERV OUTPUT)
CN2L	CONNECTOR (LOSSNAY)
CN32	CONNECTOR (REMOTE SWITCH)
CN41	CONNECTOR (HA TERMINAL-A)
CN51	CONNECTOR (CENTRALLY CONTROL)
CN90	CONNECTOR (WIRELESS)
CN105	CONNECTOR (RADIO FREQUENCY INTERFACE)
LED1	LED (POWER SUPPLY)
LED2	LED (REMOTE CONTROLLER SUPPLY)
LED3	LED (TRANSMISSION INDDOR-OUTDOOR)
CNER	CONNECTOR (ERV INPUT)
CNF	CONNECTOR (HUMIDITY INPUT)

SYMBOL	NAME
I.B.	INDOOR CONTROLLER BOARD
SW1	SWITCH (FOR MODEL SELECTION)
SW2	SWITCH (FOR CAPACITY CODE)
SW5	SWITCH (FOR MODE SELECTION)
SWE	CONNECTOR (EMERGENCY OPERATION)
P.B.	POWER SUPPLY BOARD
F01	FUSE AC250V 6.3A
ZNR01,02	VARISTOR
DSA	ARRESTOR
X01	AUX. RELAY
X10	AUX. RELAY
TH1	INTAKE AIR TEMP. THERMISTOR
TH2	PIPE TEMP. THERMISTOR/LIQUID
TH5	COND./EVA. TEMP. THERMISTOR
ACL	AC REACTOR (POWER FACTOR IMPROVEMENT)
FS	FLOAT SWITCH
RFI	RADIO FREQUENCY INTERFACE FOR RF THERMOSTAT

SYMBOL	NAME
TB4	TERMINAL BLOCK (INDOOR/OUTDOOR CONNECTING LINE)
TB5	TERMINAL BLOCK (REMOTE CONTROLLER TRANSMISSION LINE)
OPTIONAL PARTS	
W.B.	IR WIRELESS REMOTE CONTROLLER BOARD
RU	RECEIVING UNIT
BZ1	BUZZER
LED1	LED (RUN INDICATOR)
SW1	SWITCH (HEATING ON/OFF)
SW2	SWITCH (COOLING ON/OFF)
R.B.	WIRED REMOTE CONTROLLER BOARD
TB6	TERMINAL BLOCK (REMOTE CONTROLLER TRANSMISSION LINE)

Note1.Since the outdoor side electric wiring may change be sure to check the outdoor unit electric wiring for servicing.
2.Indoor and outdoor connecting wires are made with polarities, make wiring matching terminal numbers (S1,S2,S3).
3.Symbols used in wiring diagram above are as follows.
◐, ▭ :CONNECTOR
▭ :TERMINAL
- - - (HEAVY DOTTED LINE):FIELD WIRING
- - - (THIN DOTTED LINE):OPTIONAL PARTS

USE COPPER SUPPLY WIRES.
UTILISER DES FILS D'ALIMENTATION EN CUIVRE.

SVZ-KP12NA SVZ-KP18NA

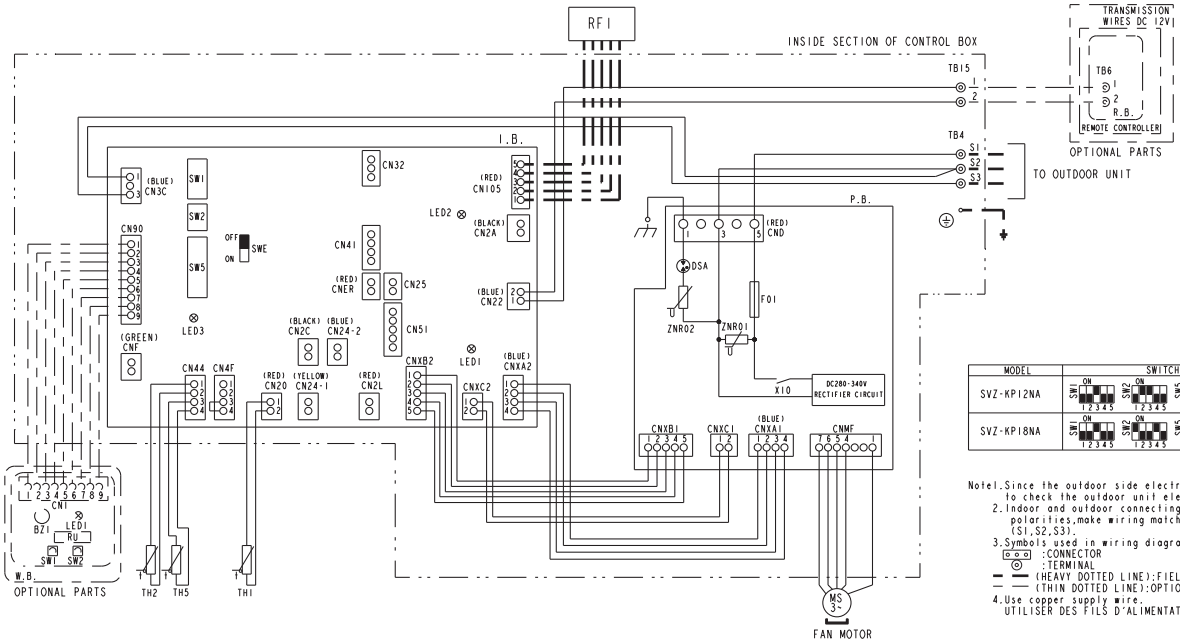

MODEL	SWITCH
SVZ-KP12NA	SW1 ON 1 2 3 4 5 / SW2 ON 1 2 3 4 5 / SW5 ON 1 2 3 4 5 6 7 8
SVZ-KP18NA	SW1 ON 1 2 3 4 5 / SW2 ON 1 2 3 4 5 / SW5 ON 1 2 3 4 5 6 7 8

Note1.Since the outdoor side electric wiring may change be sure to check the outdoor unit electric wiring for servicing.
2.Indoor and outdoor connecting wires are made with polarities,make wiring matching terminal numbers (S1,S2,S3).
3.Symbols used in wiring diagram above are as follows.
:CONNECTOR
:TERMINAL
(HEAVY DOTTED LINE):FIELD WIRING
(THIN DOTTED LINE):OPTIONAL PARTS
4.Use copper supply wire.
UTILISER DES FILS D'ALIMENTATION EN CUIVRE.

SYMBOL EXPLANATION

SYMBOL	NAME
I.B.	INDOOR CONTROLLER BOARD
CN24-1	CONNECTOR (HEATER CONTROL 1ST)
CN24-2	CONNECTOR (HEATER CONTROL 2ND)
CN25	CONNECTOR (HUMIDITY OUTPUT)
CN2A	CONNECTOR (0-10V ANALOG INPUT)
CN2C	CONNECTOR (ERV OUTPUT)
CN2L	CONNECTOR (LOSSNAY)
CN32	CONNECTOR (REMOTE SWITCH)
CN41	CONNECTOR (HA TERMINAL-A)
CN51	CONNECTOR (CENTRALLY CONTROL)
CN90	CONNECTOR (WIRELESS)
CN105	CONNECTOR (RADIO FREQUENCY INTERFACE)
CNER	CONNECTOR (ERV INPUT)
CNF	CONNECTOR (HUMIDITY INPUT)
LED1	LED(POWER SUPPLY)
LED2	LED(REMOTE CONTROLLER SUPPLY)
LED3	LED(TRANSMISSION INDOOR-OUTDOOR)

SYMBOL	NAME
I.B.	INDOOR CONTROLLER BOARD
SW1	SWITCH (FOR MODEL SELECTION)
SW2	SWITCH (FOR CAPACITY CODE)
SW5	SWITCH (FOR MODE SELECTION)
SWE	CONNECTOR (EMERGENCY OPERATION)
P.B.	POWER SUPPLY BOARD
F01	FUSE AC250V 6.3A
ZNR01,02	VARISTOR
DSA	ARRESTOR
X10	AUX. RELY
TH1	INTAKE AIR TEMP. THERMISTOR
TH2	PIPE TEMP. THERMISTOR/LIQUID
TH5	COND./EVA.TEMP. THERMISTOR
TB4	TERMINAL BLOCK (INDOOR/OUTDOOR CONNECTING LINE)
TB15	TERMINAL BLOCK (REMOTE CONTROLLER TRANSMISSION LINE)
RF1	RADIO FREQUENCY INTERFACE FOR RF THERMOSTAT

SYMBOL	NAME
OPTIONAL PARTS	
W.B.	IR WIRELESS REMOTE CONTROLLER BOARD
RU	RECEIVING UNIT
BZ1	BUZZER
LED1	LED(RUN INDICATOR)
SW1	SWITCH(HEATING ON/OFF)
SW2	SWITCH(COOLING ON/OFF)
R.B.	WIRED REMOTE CONTROLLER BOARD
TB6	TERMINAL BLOCK (REMOTE CONTROLLER TRANSMISSION LINE)

MFZ-KJ09NA MFZ-KJ12NA MFZ-KJ15NA MFZ-KJ18NA

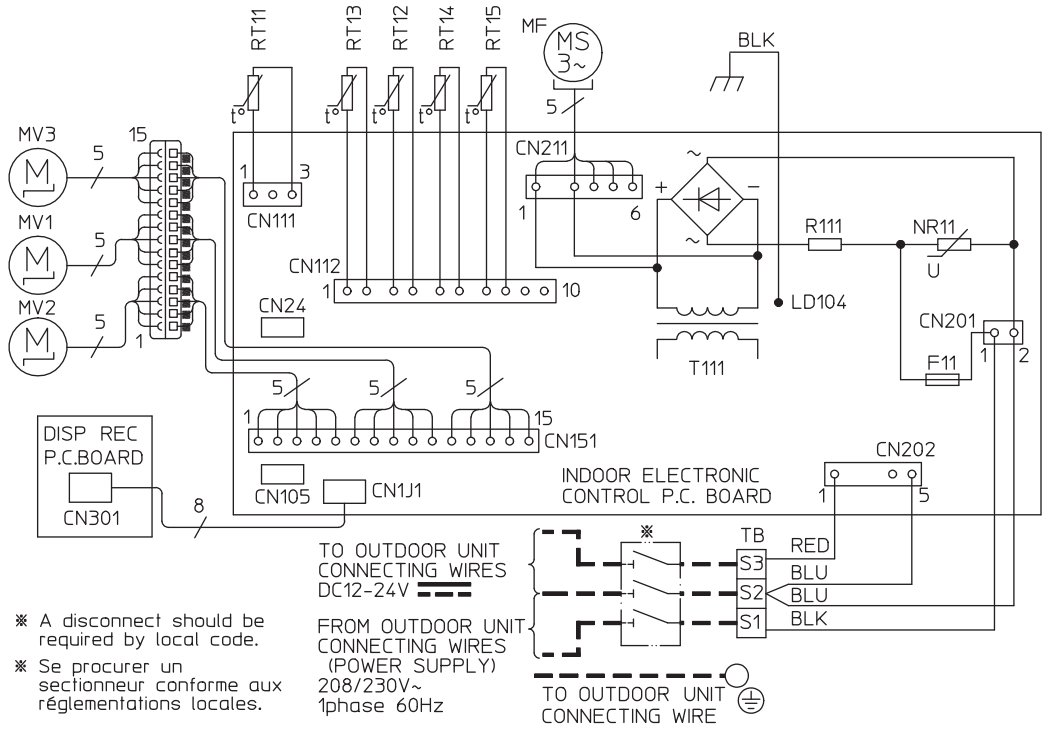

※ A disconnect should be required by local code.

※ Se procurer un sectionneur conforme aux réglementations locales.

SYMBOL	NAME
MF	FAN MOTOR
MV1	HORIZONTAL VANE MOTOR (FRONT)
MV2	HORIZONTAL VANE MOTOR (BACK)
MV3	MULTI-FLOW VANE MOTOR
F11	FUSE (T3.15AL250V)
T111	TRANSFORMER
TB	TERMINAL BLOCK
RT11	ROOM TEMP. THERMISTOR
RT12	COIL TEMP. THERMISTOR(MAIN1)
RT13	COIL TEMP. THERMISTOR(SUB)
RT14	COIL TEMP. THERMISTOR(MAIN2)
RT15	COIL TEMP. THERMISTOR(MAIN3)
NR11	VARISTOR
R111	RESISTOR

5-2. OUTDOOR UNIT
MU-A09WA

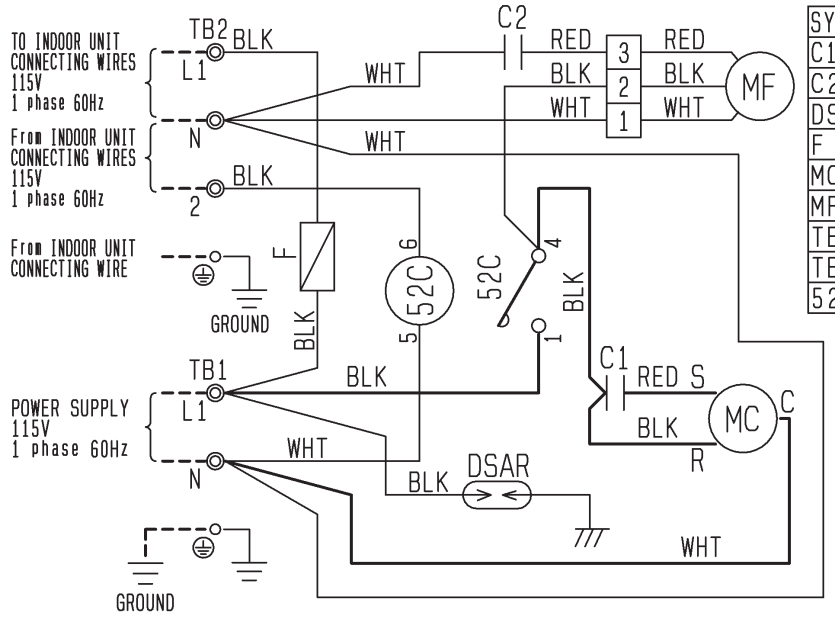

SYMBOL	NAME
C1	COMPRESSOR CAPACITOR
C2	FAN MOTOR CAPACITOR
DSAR	SURGE ABSORBER
F	FUSE
MC	COMPRESSOR(INNER PROTECTOR)
MF	FAN MOTOR(INNER PROTECTOR)
TB1	TERMINAL BLOCK
TB2	TERMINAL BLOCK
52C	COMPRESSOR CONTACTOR

NOTES
1. About the indoor side electric wiring refer to the indoor unit electric wiring diagram for servicing.
2. Use copper conductors only(for field wiring).
3. Symbols below indicate.
◎:Terminal block ☐☐☐:Connector

MU-A12WA

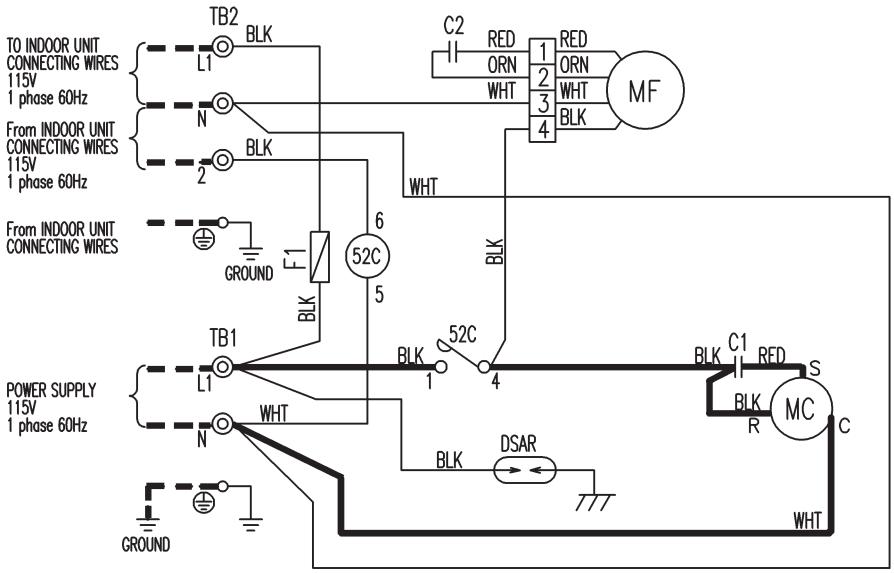

SYMBOL	NAME
C1	COMPRESSOR CAPACITOR
C2	FAN MOTOR CAPACITOR
DSAR	SURGE ABSORBER
F1	FUSE (AC250V, 3.15A)
MC	COMPRESSOR (INNER PROTECTOR)
MF	FAN MOTOR (INNER PROTECTOR)
TB1	TERMINAL BLOCK
TB2	TERMINAL BLOCK
52C	COMPRESSOR CONTACTOR

NOTES: 1. About the indoor side electric wiring refer to the indoor unit electric wiring diagram for servicing.
2. Use copper conductors only (For field wiring).
3. Symbols below indicate.
◎:Terminal block ☐☐☐☐:Connector

MUZ-GL09NA MUZ-GL12NA

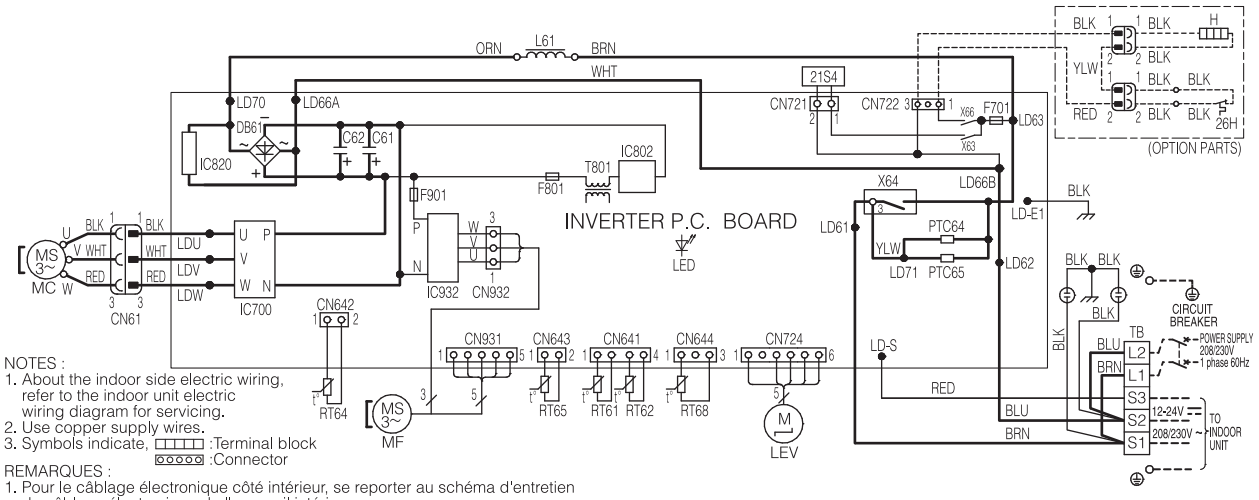

NOTES :
1. About the indoor side electric wiring, refer to the indoor unit electric wiring diagram for servicing.
2. Use copper supply wires.
3. Symbols indicate, ☐☐☐☐☐ :Terminal block
   ◎◎◎◎◎ :Connector

REMARQUES :
1. Pour le câblage électronique côté intérieur, se reporter au schéma d'entretien du câblage électronique de l'appareil intérieur.
2. Utiliser des fils d'alimentation en cuivre.
3. Les symboles ont les significations suivantes, ☐☐☐☐☐ :Borne
   ◎◎◎◎◎ :Connecteur

SYMBOL	NAME	SYMBOL	NAME	SYMBOL	NAME
C61,C62	SMOOTHING CAPACITOR	L61	REACTOR	RT68	OUTDOOR HEAT EXCHANGER TEMP. THERMISTOR
DB61	DIODE MODULE	MC	COMPRESSOR		
F701,F801,F901	FUSE (T3. 15AL250V)	MF	FAN MOTOR	TB	TERMINAL BLOCK
H	DEFROST HEATER(OPTION PARTS)	PTC64, PTC65	CIRCUIT PROTECTION	T801	TRANSFORMER
IC700,IC820,IC932	POWER MODULE	RT61	DEFROST THERMISTOR	X63, X64, X66	RELAY
IC802	POWER DEVICE	RT62	DISCHARGE TEMP. THERMISTOR	21S4	REVERSING VALVE COIL
LED	LED	RT64	FIN TEMP. THERMISTOR	26H	HEATER PROTECTOR(OPTION PARTS)
LEV	EXPANSION VALVE COIL	RT65	AMBIENT TEMP. THERMISTOR		

MUZ-GL09NAH MUZ-GL12NAH

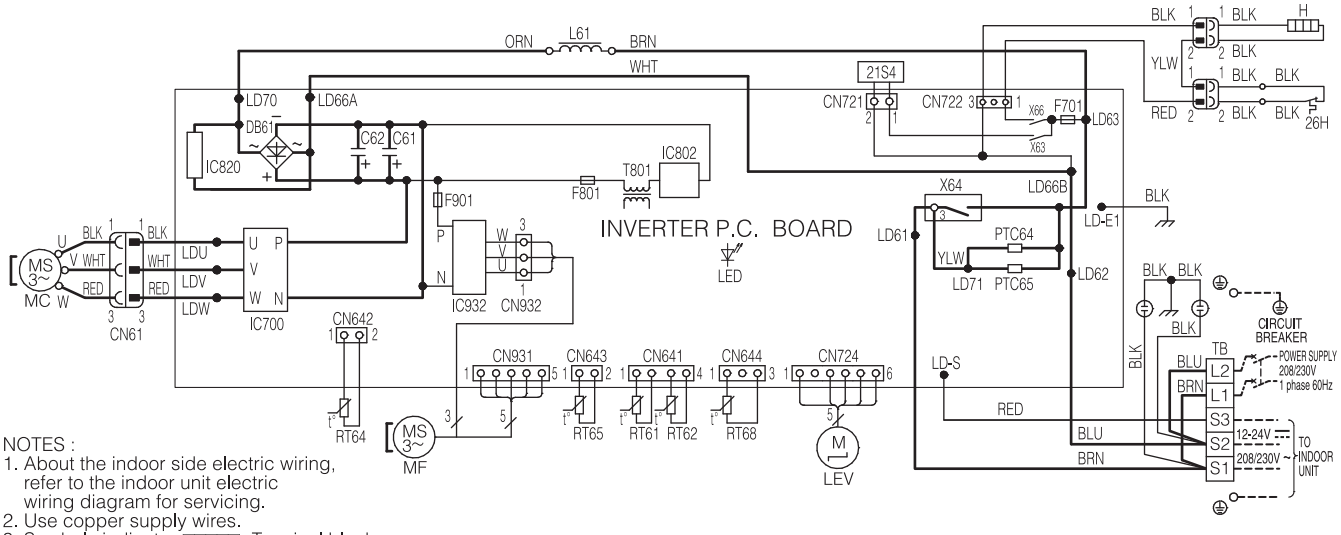

NOTES :
1. About the indoor side electric wiring, refer to the indoor unit electric wiring diagram for servicing.
2. Use copper supply wires.
3. Symbols indicate, ▭▭▭▭ :Terminal block
   ⊙⊙⊙⊙⊙ :Connector

REMARQUES :
1. Pour le câblage électronique côté intérieur, se reporter au schéma d'entretien du câblage électronique de l'appareil intérieur.
2. Utiliser des fils d'alimentation en cuivre.
3. Les symboles ont les ▭▭▭▭ :Borne
   significations suivantes, ⊙⊙⊙⊙⊙ :Connecteur

SYMBOL	NAME	SYMBOL	NAME	SYMBOL	NAME
C61,C62	SMOOTHING CAPACITOR	L61	REACTOR	RT68	OUTDOOR HEAT EXCHANGER TEMP. THERMISTOR
DB61	DIODE MODULE	MC	COMPRESSOR		
F701,F801,F901	FUSE (T3. 15AL250V)	MF	FAN MOTOR	TB	TERMINAL BLOCK
H	DEFROST HEATER	PTC64, PTC65	CIRCUIT PROTECTION	T801	TRANSFORMER
IC700,IC820,IC932	POWER MODULE	RT61	DEFROST THERMISTOR	X63, X64, X66	RELAY
IC802	POWER DEVICE	RT62	DISCHARGE TEMP. THERMISTOR	21S4	REVERSING VALVE COIL
LED	LED	RT64	FIN TEMP. THERMISTOR	26H	HEATER PROTECTOR
LEV	EXPANSION VALVE COIL	RT65	AMBIENT TEMP. THERMISTOR		

MUY-GL09NA MUY-GL12NA

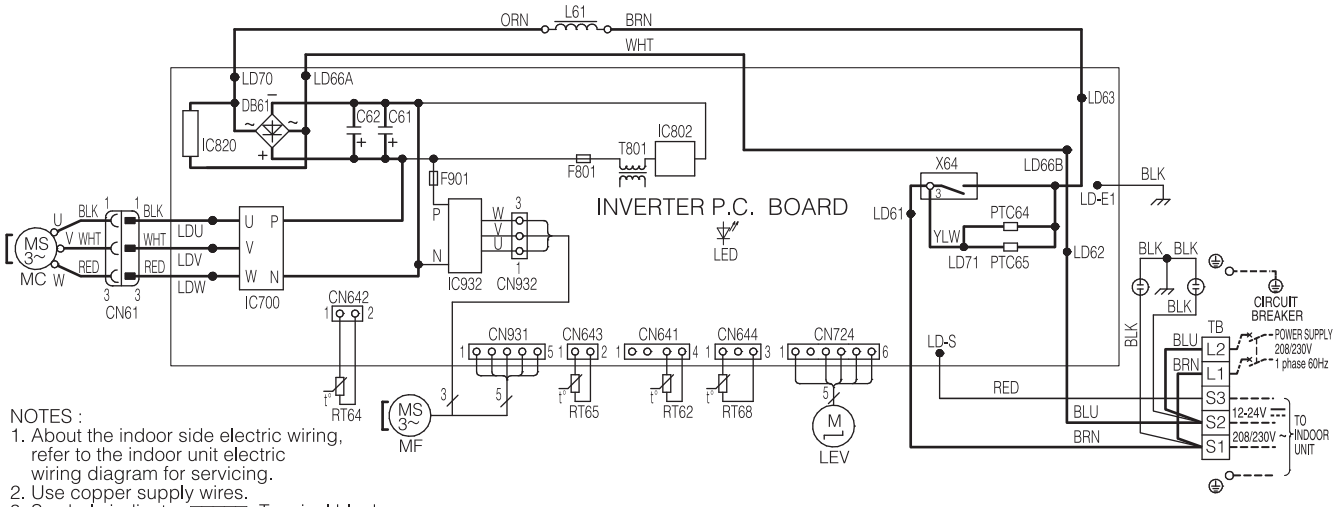

NOTES :
1. About the indoor side electric wiring, refer to the indoor unit electric wiring diagram for servicing.
2. Use copper supply wires.
3. Symbols indicate, ☐☐☐☐☐ :Terminal block
   ⊙⊙⊙⊙⊙ :Connector

REMARQUES :
1. Pour le câblage électronique côté intérieur, se reporter au schéma d'entretien du câblage électronique de l'appareil intérieur.
2. Utiliser des fils d'alimentation en cuivre.
3. Les symboles ont les significations suivantes, ☐☐☐☐☐ :Borne
   ⊙⊙⊙⊙⊙ :Connecteur

SYMBOL	NAME	SYMBOL	NAME	SYMBOL	NAME
C61,C62	SMOOTHING CAPACITOR	L61	REACTOR	RT68	OUTDOOR HEAT EXCHANGER TEMP. THERMISTOR
DB61	DIODE MODULE	MC	COMPRESSOR		
F801,F901	FUSE (T3. 15AL250V)	MF	FAN MOTOR	TB	TERMINAL BLOCK
IC700,IC820,IC932	POWER MODULE	PTC64, PTC65	CIRCUIT PROTECTION	T801	TRANSFORMER
IC802	POWER DEVICE	RT62	DISCHARGE TEMP. THERMISTOR	X64	RELAY
LED	LED	RT64	FIN TEMP. THERMISTOR		
LEV	EXPANSION VALVE COIL	RT65	AMBIENT TEMP. THERMISTOR		

MUZ-GL15NA

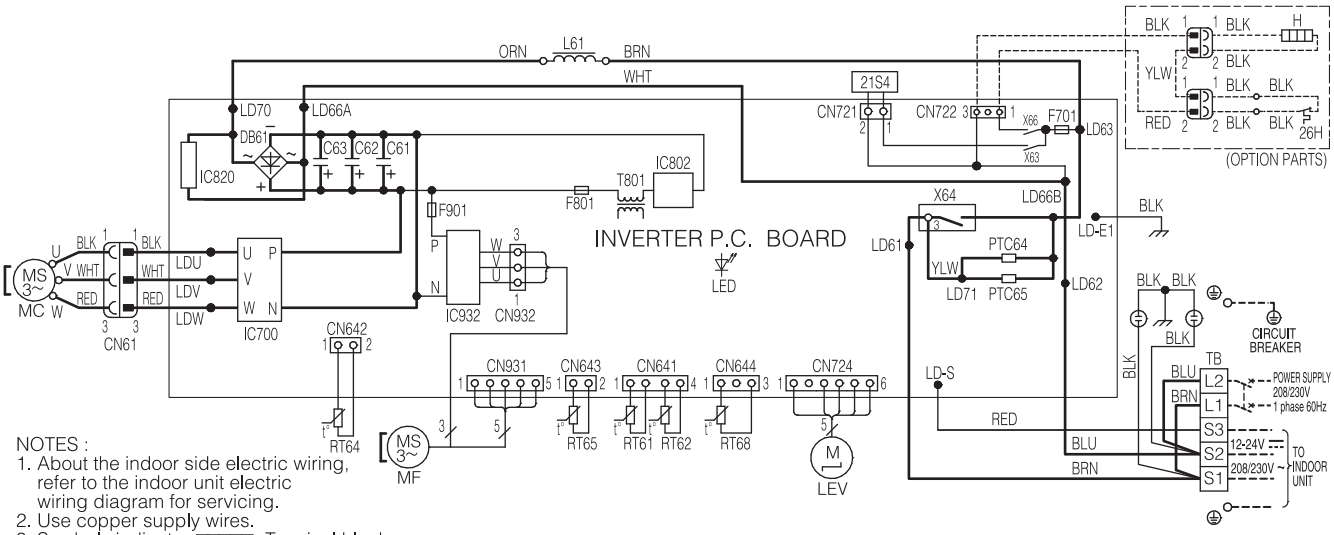

NOTES :
1. About the indoor side electric wiring, refer to the indoor unit electric wiring diagram for servicing.
2. Use copper supply wires.
3. Symbols indicate, ▭ :Terminal block
   ⊙⊙⊙⊙⊙ :Connector

REMARQUES :
1. Pour le câblage électronique côté intérieur, se reporter au schéma d'entretien du câblage électronique de l'appareil intérieur.
2. Utiliser des fils d'alimentation en cuivre.
3. Les symboles ont les significations suivantes, ▭ :Borne
   ⊙⊙⊙⊙⊙ :Connecteur

SYMBOL	NAME	SYMBOL	NAME	SYMBOL	NAME
C61,C62,C63	SMOOTHING CAPACITOR	L61	REACTOR	RT68	OUTDOOR HEAT EXCHANGER TEMP. THERMISTOR
DB61	DIODE MODULE	MC	COMPRESSOR		
F701,F801,F901	FUSE (T3. 15AL250V)	MF	FAN MOTOR	TB	TERMINAL BLOCK
H	DEFROST HEATER	PTC64, PTC65	CIRCUIT PROTECTION	T801	TRANSFORMER
IC700,IC820,IC932	POWER MODULE	RT61	DEFROST THERMISTOR	X63, X64, X66	RELAY
IC802	POWER DEVICE	RT62	DISCHARGE TEMP. THERMISTOR	21S4	REVERSING VALVE COIL
LED	LED	RT64	FIN TEMP. THERMISTOR	26H	HEATER PROTECTOR
LEV	EXPANSION VALVE COIL	RT65	AMBIENT TEMP. THERMISTOR		

MUZ-GL15NAH

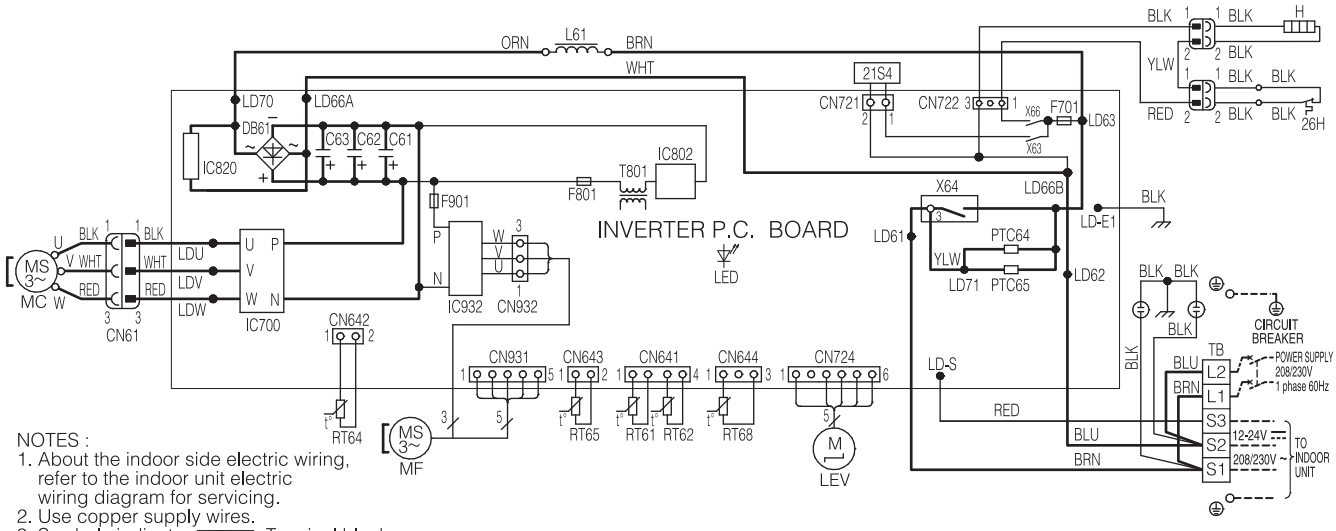

NOTES :
1. About the indoor side electric wiring, refer to the indoor unit electric wiring diagram for servicing.
2. Use copper supply wires.
3. Symbols indicate, ▭▭▭▭ :Terminal block
   ⊙⊙⊙⊙⊙ :Connector

REMARQUES :
1. Pour le câblage électronique côté intérieur, se reporter au schéma d'entretien du câblage électronique de l'appareil intérieur.
2. Utiliser des fils d'alimentation en cuivre.
3. Les symboles ont les significations suivantes, ▭▭▭▭ :Borne
   ⊙⊙⊙⊙⊙ :Connecteur

SYMBOL	NAME	SYMBOL	NAME	SYMBOL	NAME
C61,C62,C63	SMOOTHING CAPACITOR	L61	REACTOR	RT68	OUTDOOR HEAT EXCHANGER TEMP. THERMISTOR
DB61	DIODE MODULE	MC	COMPRESSOR		
F701,F801,F901	FUSE (T3. 15AL250V)	MF	FAN MOTOR	TB	TERMINAL BLOCK
H	DEFROST HEATER	PTC64, PTC65	CIRCUIT PROTECTION	T801	TRANSFORMER
IC700,IC820,IC932	POWER MODULE	RT61	DEFROST THERMISTOR	X63, X64, X66	RELAY
IC802	POWER DEVICE	RT62	DISCHARGE TEMP. THERMISTOR	21S4	REVERSING VALVE COIL
LED	LED	RT64	FIN TEMP. THERMISTOR	26H	HEATER PROTECTOR
LEV	EXPANSION VALVE COIL	RT65	AMBIENT TEMP. THERMISTOR		

MUY-GL15NA

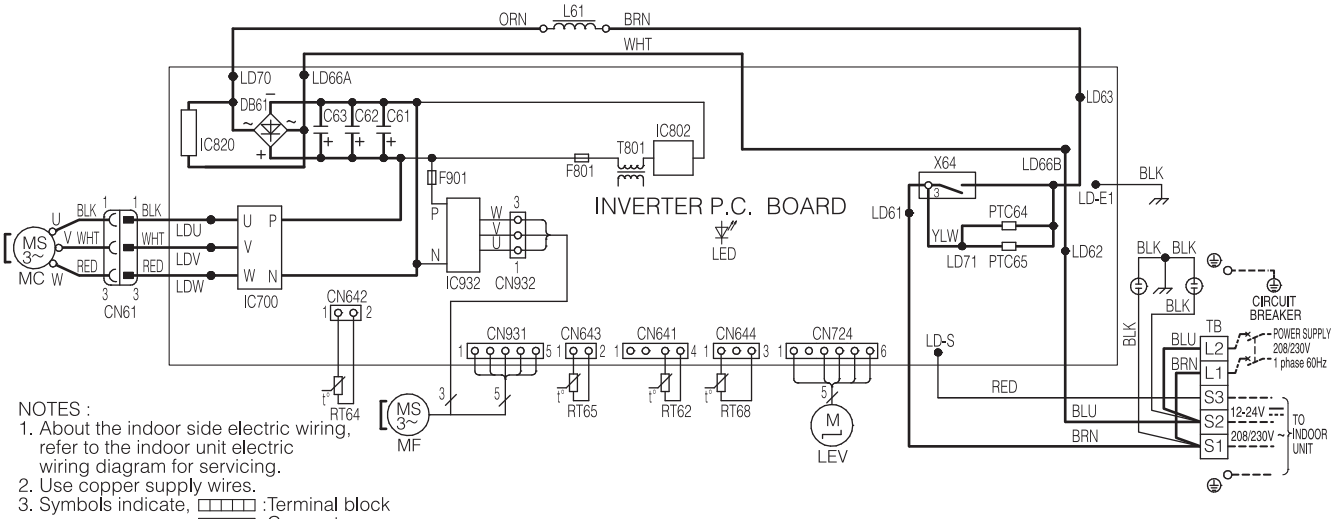

NOTES :
1. About the indoor side electric wiring, refer to the indoor unit electric wiring diagram for servicing.
2. Use copper supply wires.
3. Symbols indicate, ▭▭▭▭ :Terminal block
   ⊙⊙⊙⊙⊙ :Connector

REMARQUES :
1. Pour le câblage électronique côté intérieur, se reporter au schéma d'entretien du câblage électronique de l'appareil intérieur.
2. Utiliser des fils d'alimentation en cuivre.
3. Les symboles ont les significations suivantes, ▭▭▭▭ :Borne
   ⊙⊙⊙⊙⊙ :Connecteur

SYMBOL	NAME	SYMBOL	NAME	SYMBOL	NAME
C61,C62,C63	SMOOTHING CAPACITOR	L61	REACTOR	RT68	OUTDOOR HEAT EXCHANGER TEMP. THERMISTOR
DB61	DIODE MODULE	MC	COMPRESSOR		
F801,F901	FUSE (T3. 15AL250V)	MF	FAN MOTOR	TB	TERMINAL BLOCK
IC700,IC820,IC932	POWER MODULE	PTC64, PTC65	CIRCUIT PROTECTION	T801	TRANSFORMER
IC802	POWER DEVICE	RT62	DISCHARGE TEMP. THERMISTOR	X64	RELAY
LED	LED	RT64	FIN TEMP. THERMISTOR		
LEV	EXPANSION VALVE COIL	RT65	AMBIENT TEMP. THERMISTOR		

MUZ-GL18NA

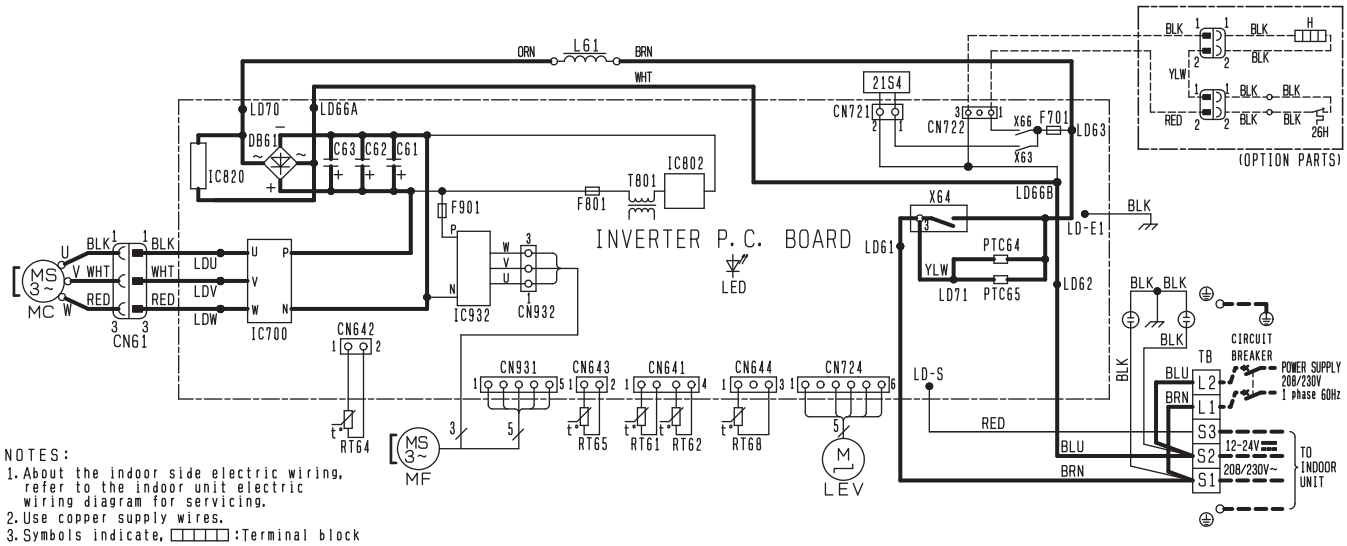

NOTES:
1. About the indoor side electric wiring, refer to the indoor unit electric wiring diagram for servicing.
2. Use copper supply wires.
3. Symbols indicate, ▭ :Terminal block
   ⊙ :Connector

REMARQUES:
1. Pour le câblage électronique côté intérieur, se reporter au schéma d'entretien du câblage électronique de l'appareil intérieur.
2. Utiliser des fils d'alimentation en cuivre.
3. Les symboles ont les significations suivantes, ▭ :Borne
   ⊙ :Connecteur

SYMBOL	NAME	SYMBOL	NAME	SYMBOL	NAME
C61, C62, C63	SMOOTHING CAPACITOR	L61	REACTOR	RT68	OUTDOOR HEAT EXCHANGER TEMP. THERMISTOR.
DB61	DIODE MODULE	MC	COMPRESSOR		
F701, F801, F901	FUSE (T3.15AL250V)	MF	FAN MOTOR	TB	TERMINAL BLOCK
H	DEFROST HEATER (OPTION PARTS)	PTC64, PTC65	CIRCUIT PROTECTION	T801	TRANSFORMER
IC700, IC820, IC932	POWER MODULE	RT61	DEFROST THERMISTOR	X63, X64, X66	RELAY
IC802	POWER DEVICE	RT62	DISCHARGE TEMP. THERMISTOR	21S4	REVERSING VALVE COIL
LED	LED	RT64	FIN TEMP. THERMISTOR	26H	HEATER PROTECTOR (OPTION PARTS)
LEV	EXPANSION VALVE COIL	RT65	AMBIENT TEMP. THERMISTOR		

MUZ-GL18NAH

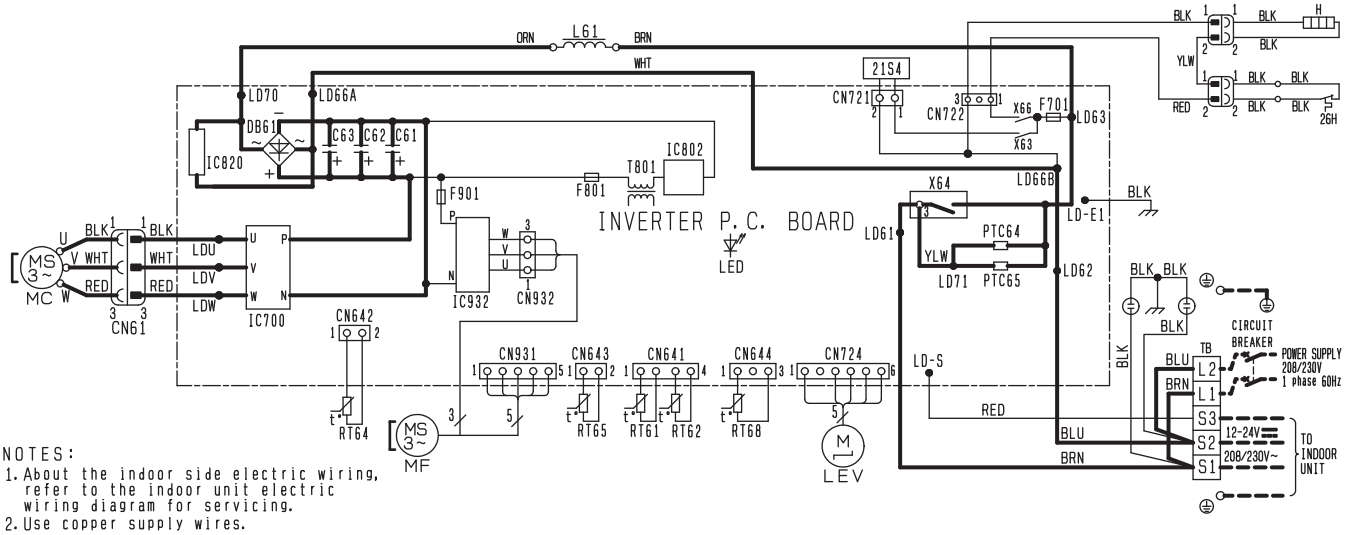

NOTES:
1. About the indoor side electric wiring, refer to the indoor unit electric wiring diagram for servicing.
2. Use copper supply wires.
3. Symbols indicate, ☐☐☐☐☐ :Terminal block
   ○○○○○ :Connector

REMARQUES:
1. Pour le câblage électronique côté intérieur, se reporter au schéma d'entretien du câblage électronique de l'appareil intérieur.
2. Utiliser des fils d'alimentation en cuivre.
3. Les symboles ont les significations suivantes, ☐☐☐☐☐ :Borne
   ○○○○○ :Connecteur

SYMBOL	NAME	SYMBOL	NAME	SYMBOL	NAME
C61, C62, C63	SMOOTHING CAPACITOR	L61	REACTOR	RT68	OUTDOOR HEAT EXCHANGER TEMP. THERMISTOR.
DB61	DIODE MODULE	MC	COMPRESSOR		
F701, F801, F901	FUSE (T3.15AL250V)	MF	FAN MOTOR	TB	TERMINAL BLOCK
H	DEFROST HEATER	PTC64, PTC65	CIRCUIT PROTECTION	T801	TRANSFORMER
IC700, IC820, IC932	POWER MODULE	RT61	DEFROST THERMISTOR	X63, X64, X66	RELAY
IC802	POWER DEVICE	RT62	DISCHARGE TEMP. THERMISTOR	21S4	REVERSING VALVE COIL
LED	LED	RT64	FIN TEMP. THERMISTOR	26H	HEATER PROTECTOR
LEV	EXPANSION VALVE COIL	RT65	AMBIENT TEMP. THERMISTOR		

MUY-GL18NA

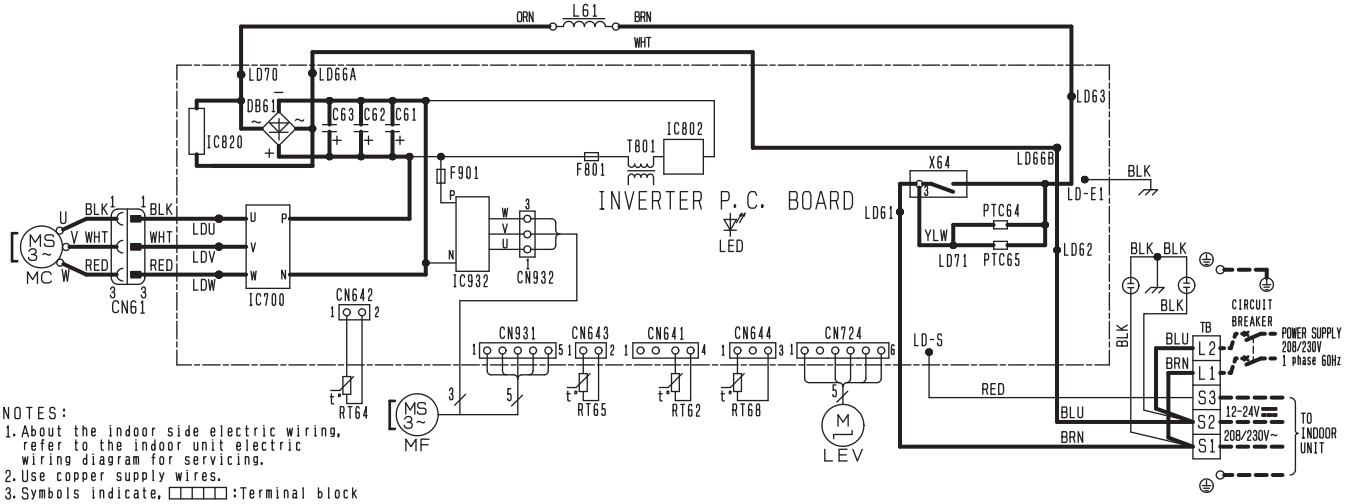

NOTES:
1. About the indoor side electric wiring, refer to the indoor unit electric wiring diagram for servicing.
2. Use copper supply wires.
3. Symbols indicate, ▭▭▭▭▭ :Terminal block
   ○○○○○ :Connector

REMARQUES:
1. Pour le câblage électronique côté intérieur, se reporter au schéma d'entretien du câblage électronique de l'appareil intérieur.
2. Utiliser des fils d'alimentation en cuivre.
3. Les symboles ont les significations suivantes, ▭▭▭▭▭ :Borne
   ○○○○○ :Connecteur

SYMBOL	NAME	SYMBOL	NAME	SYMBOL	NAME
C61, C62, C63	SMOOTHING CAPACITOR	L61	REACTOR	RT68	OUTDOOR HEAT EXCHANGER TEMP. THERMISTOR.
DB61	DIODE MODULE	MC	COMPRESSOR		
F801, F901	FUSE (T3. 15AL250V)	MF	FAN MOTOR	TB	TERMINAL BLOCK
IC700, IC820, IC932	POWER MODULE	PTC64, PTC65	CIRCUIT PROTECTION	T801	TRANSFORMER
IC802	POWER DEVICE	RT62	DISCHARGE TEMP. THERMISTOR	X64	RELAY
LED	LED	RT64	FIN TEMP. THERMISTOR		
LEV	EXPANSION VALVE COIL	RT65	AMBIENT TEMP. THERMISTOR		

MUZ-GL24NA

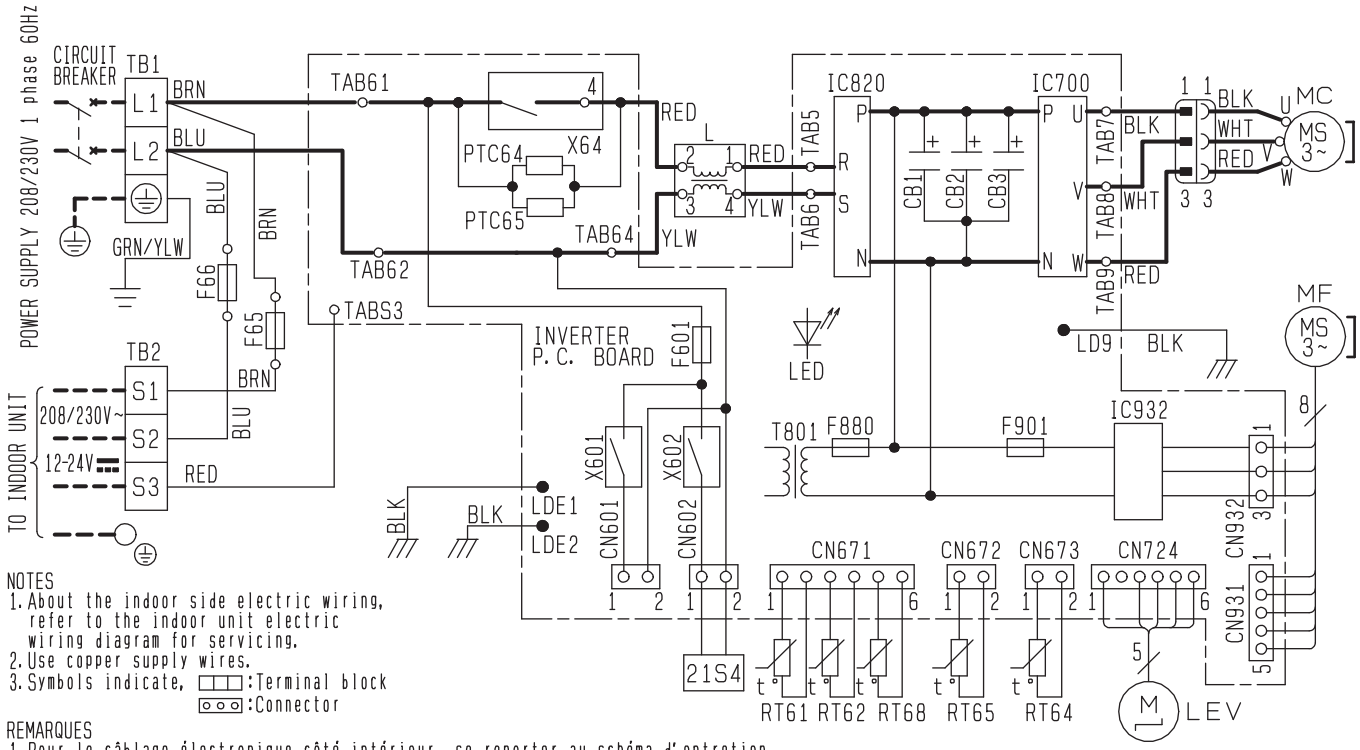

NOTES
1. About the indoor side electric wiring, refer to the indoor unit electric wiring diagram for servicing.
2. Use copper supply wires.
3. Symbols indicate, ⊟⊟⊟:Terminal block
   ⊡⊡⊡:Connector

REMARQUES
1. Pour le câblage électronique côté intérieur, se reporter au schéma d'entretien du câblage électronique de l'appareil intérieur.
2. Utiliser des fils d'alimentation en cuivre.
3. Les symboles ont les significations suivantes, ⊟⊟⊟:Borne ⊡⊡⊡:Connecteur

SYMBOL	NAME	SYMBOL	NAME	SYMBOL	NAME
CB1～3	SMOOTHING CAPACITOR	LED	LED	RT65	AMBIENT TEMP. THERMISTOR
F65, F66	FUSE (T6. 3AL250V)	LEV	EXPANSION VALVE COIL	RT68	OUTDOOR HEAT EXCHANGER TEMP. THERMISTOR
F601	FUSE (T3. 15AL250V)	MC	COMPRESSOR		
F880	FUSE (T3. 15AL250V)	MF	FAN MOTOR	TB1, TB2	TERMINAL BLOCK
F901	FUSE (T3. 15AL250V)	PTC64	CIRCUIT PROTECTION	T801	TRANSFORMER
IC700	IGBT Module	PTC65	CIRCUIT PROTECTION	X601	RELAY
IC820	DIODE Module	RT61	DEFROST THERMISTOR	X602	RELAY
IC932	IGBT Module	RT62	DISCHARGE TEMP. THERMISTOR	X64	RELAY
L	REACTOR	RT64	FIN TEMP. THERMISTOR	21S4	REVERSING VALVE COIL

MUZ-GL24NAH

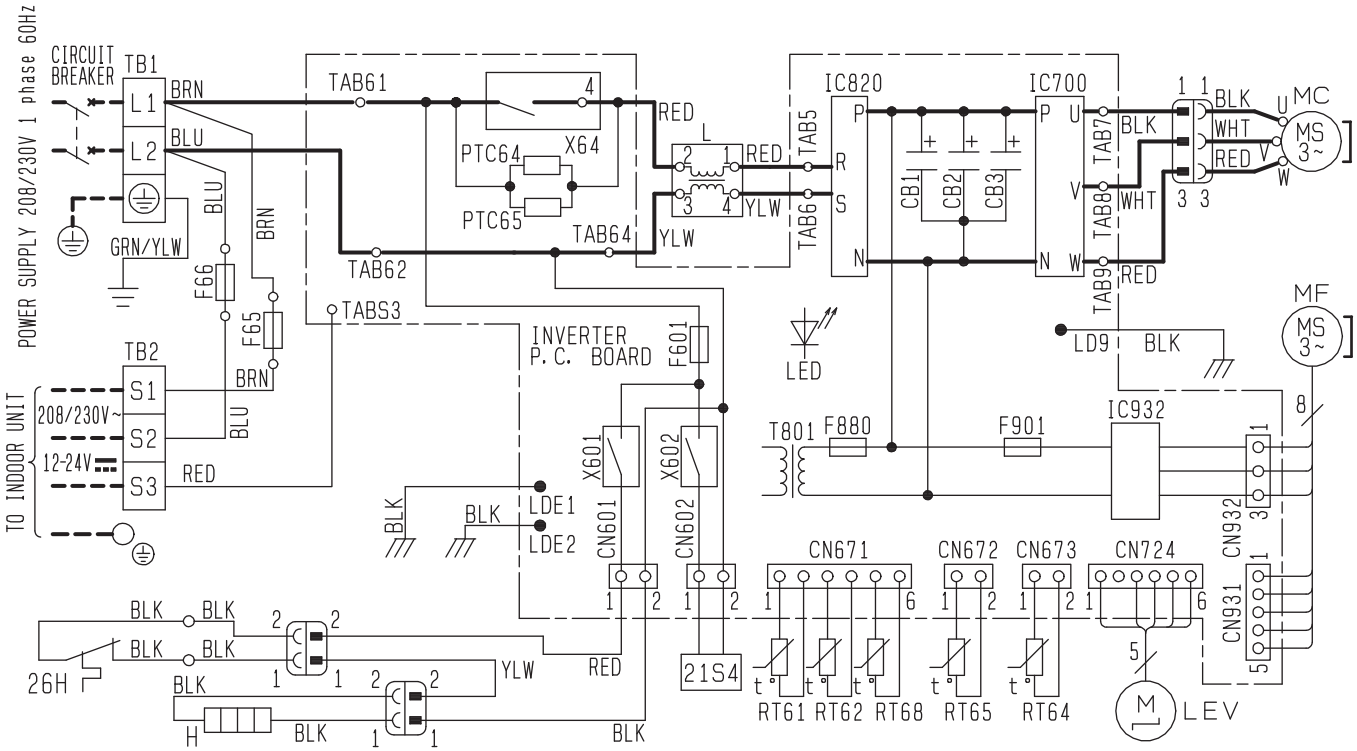

NOTES
1. About the indoor side electric wiring, refer to the indoor unit electric wiring diagram for servicing.
2. Use copper supply wires.
3. Symbols indicate, ☐☐☐:Terminal block
   ⊙⊙⊙:Connector

REMARQUES
1. Pour le câblage électronique côté intérieur, se reporter au schéma d'entretien du câblage électronique de l'appareil intérieur.
2. Utiliser des fils d'alimentation en cuivre.
3. Les symboles ont les significations suivantes, ☐☐☐:Borne ⊙⊙⊙:Connecteur

SYMBOL	NAME	SYMBOL	NAME	SYMBOL	NAME
CB1~3	SMOOTHING CAPACITOR	LED	LED	RT68	OUTDOOR HEAT EXCHANGER TEMP. THERMISTOR
F65, F66	FUSE (T6. 3AL250V)	LEV	EXPANSION VALVE COIL		
F601	FUSE (T3. 15AL250V)	MC	COMPRESSOR	TB1, TB2	TERMINAL BLOCK
F880	FUSE (T3. 15AL250V)	MF	FAN MOTOR	T801	TRANSFORMER
F901	FUSE (T3. 15AL250V)	PTC64	CIRCUIT PROTECTION	X601	RELAY
H	DEFROST HEATER	PTC65	CIRCUIT PROTECTION	X602	RELAY
IC700	IGBT Module	RT61	DEFROST THERMISTOR	X64	RELAY
IC820	DIODE Module	RT62	DISCHARGE TEMP. THERMISTOR	21S4	REVERSING VALVE COIL
IC932	IGBT Module	RT64	FIN TEMP. THERMISTOR	26H	HEATER PROTECTOR
L	REACTOR	RT65	AMBIENT TEMP. THERMISTOR		

MUY-GL24NA

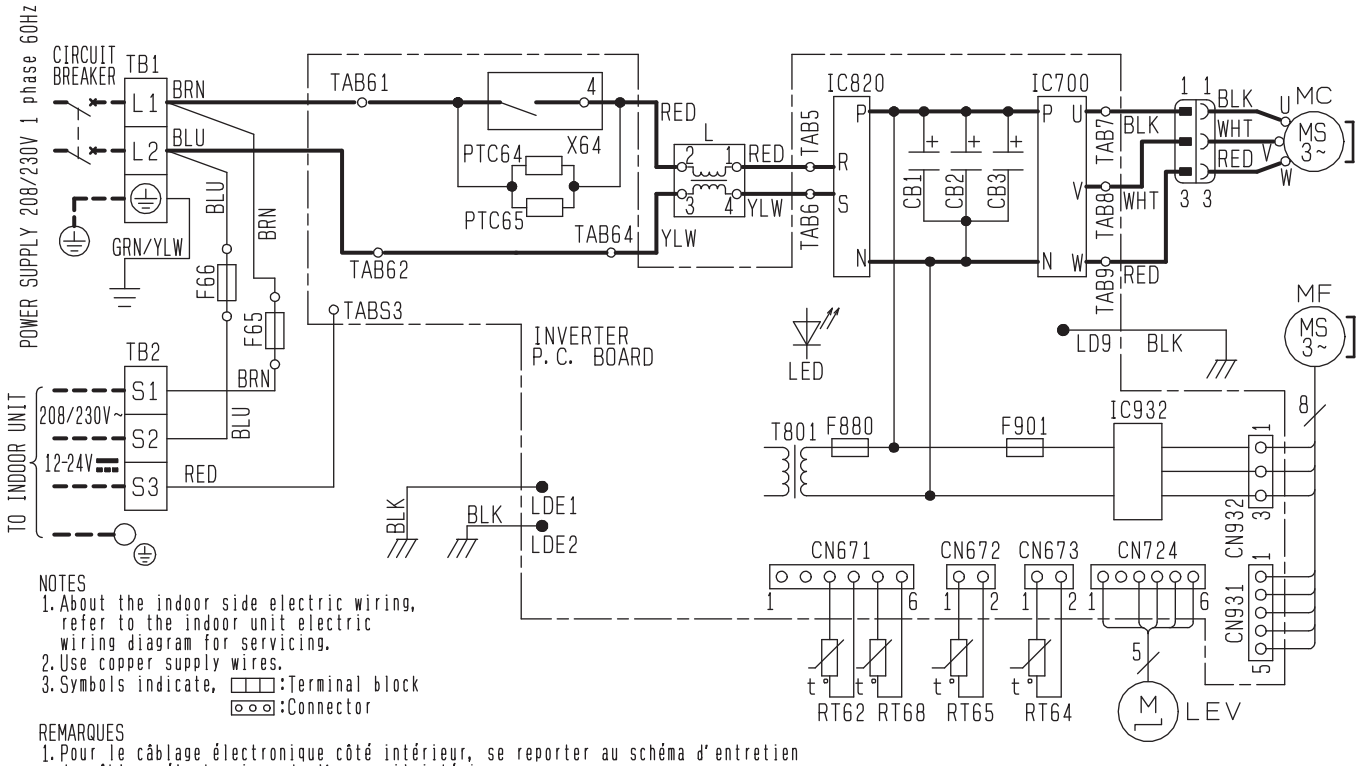

NOTES
1. About the indoor side electric wiring, refer to the indoor unit electric wiring diagram for servicing.
2. Use copper supply wires.
3. Symbols indicate, ☐☐☐:Terminal block
   ⊙⊙⊙:Connector

REMARQUES
1. Pour le câblage électronique côté intérieur, se reporter au schéma d'entretien du câblage électronique de l'appareil intérieur.
2. Utiliser des fils d'alimentation en cuivre.
3. Les symboles ont les significations suivantes, ☐☐☐:Borne ⊙⊙⊙:Connecteur

SYMBOL	NAME	SYMBOL	NAME	SYMBOL	NAME
CB1~3	SMOOTHING CAPACITOR	LED	LED	RT64	FIN TEMP. THERMISTOR
F65, F66	FUSE (T6. 3AL250V)	LEV	EXPANSION VALVE COIL	RT65	AMBIENT TEMP. THERMISTOR
F880	FUSE (T3. 15AL250V)	MC	COMPRESSOR	RT68	OUTDOOR HEAT EXCHANGER TEMP. THERMISTOR
F901	FUSE (T3. 15AL250V)	MF	FAN MOTOR		
IC700	IGBT Module	PTC64	CIRCUIT PROTECTION	TB1, TB2	TERMINAL BLOCK
IC820	DIODE Module	PTC65	CIRCUIT PROTECTION	T801	TRANSFORMER
IC932	IGBT Module	RT62	DISCHARGE TEMP. THERMISTOR	X64	RELAY
L	REACTOR				

MUZ-HM09NA - U1 MUZ-HM12NA - U1

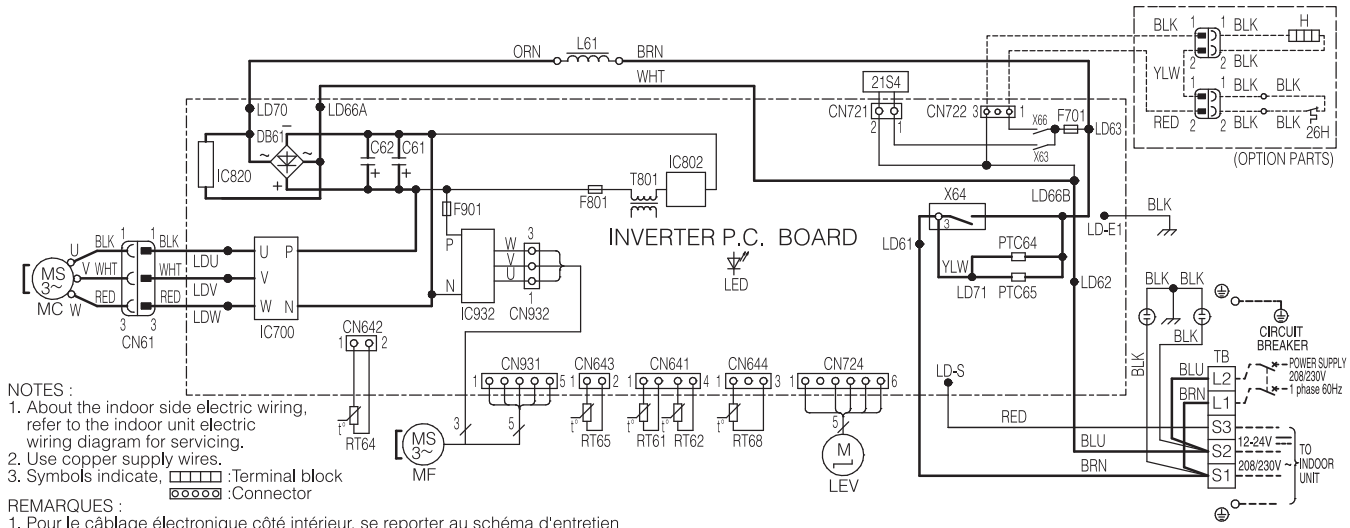

NOTES :
1. About the indoor side electric wiring, refer to the indoor unit electric wiring diagram for servicing.
2. Use copper supply wires.
3. Symbols indicate, ▭▭▭ :Terminal block
   ⊙⊙⊙⊙⊙ :Connector

REMARQUES :
1. Pour le câblage électronique côté intérieur, se reporter au schéma d'entretien du câblage électronique de l'appareil intérieur.
2. Utiliser des fils d'alimentation en cuivre.
3. Les symboles ont les ▭▭▭ :Borne
   significations suivantes, ⊙⊙⊙⊙⊙ :Connecteur

SYMBOL	NAME	SYMBOL	NAME	SYMBOL	NAME
C61,C62	SMOOTHING CAPACITOR	L61	REACTOR	RT68	OUTDOOR HEAT EXCHANGER TEMP. THERMISTOR
DB61	DIODE MODULE	MC	COMPRESSOR		
F701,F801,F901	FUSE (T3. 15AL250V)	MF	FAN MOTOR	TB	TERMINAL BLOCK
H	DEFROST HEATER(OPTION PARTS)	PTC64, PTC65	CIRCUIT PROTECTION	T801	TRANSFORMER
IC700,IC820,IC932	POWER MODULE	RT61	DEFROST THERMISTOR	X63, X64, X66	RELAY
IC802	POWER DEVICE	RT62	DISCHARGE TEMP. THERMISTOR	21S4	REVERSING VALVE COIL
LED	LED	RT64	FIN TEMP. THERMISTOR	26H	HEATER PROTECTOR(OPTION PARTS)
LEV	EXPANSION VALVE COIL	RT65	AMBIENT TEMP. THERMISTOR		

MUZ-HM09NA - U8 MUZ-HM12NA - U8

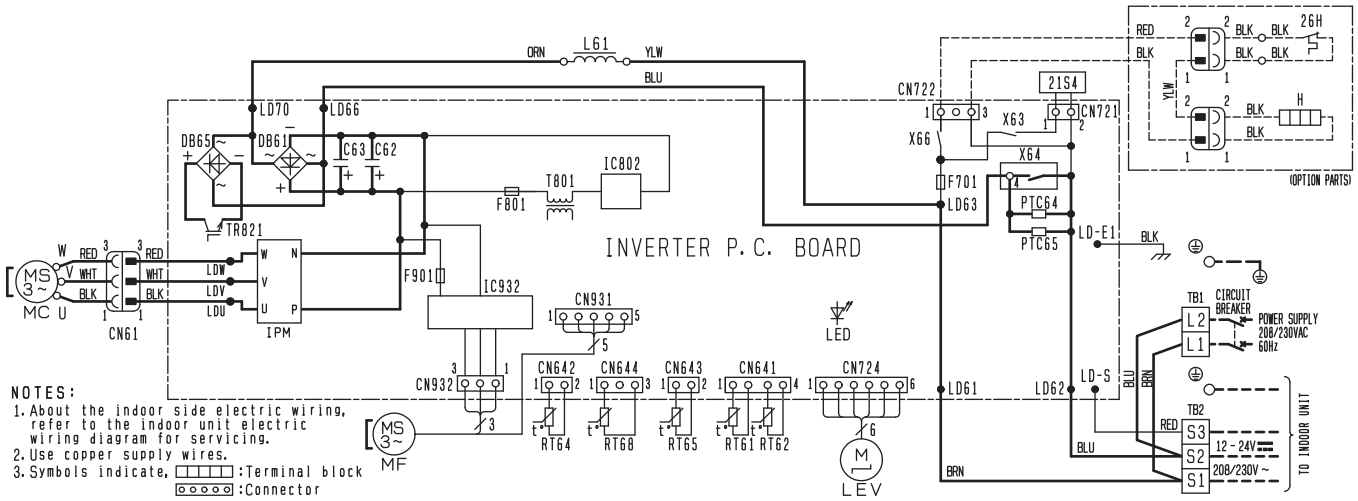

NOTES:
1. About the indoor side electric wiring, refer to the indoor unit electric wiring diagram for servicing.
2. Use copper supply wires.
3. Symbols indicate, ▭▭▭ :Terminal block
   ⊙⊙⊙⊙⊙ :Connector

REMARQUES:
1. Pour le câblage électronique côté intérieur, se reporter au schéma d'entretien du câblage électronique de l'appareil intérieur.
2. Utiliser des fils d'alimentation en cuivre.
3. Les symboles ont les ▭▭▭ :Borne
   significations suivantes, ⊙⊙⊙⊙⊙ :Connecteur

SYMBOL	NAME	SYMBOL	NAME	SYMBOL	NAME
C62, C63	SMOOTHING CAPACITOR	LEV	EXPANSION VALVE COIL	RT68	OUTDOOR HEAT EXCHANGER TEMP. THERMISTOR.
DB61, DB65	DIODE MODULE	MC	COMPRESSOR		
F701, F801, F901	FUSE (T3. 15AL250V)	MF	FAN MOTOR	TB1, TB2	TERMINAL BLOCK
H	DEFROST HEATER(OPTION PARTS)	PTC64, PTC65	CIRCUIT PROTECTION	TR821	SWITCHING POWER TRANSISTOR
IC802	POWER DEVICE	RT61	DEFROST THERMISTOR	T801	TRANSFORMER
IPM, IC932	POWER MODULE	RT62	DISCHARGE TEMP. THERMISTOR	X63, X64, X66	RELAY
L61	REACTOR	RT64	FIN TEMP. THERMISTOR	21S4	REVERSING VALVE COIL
LED	LED	RT65	AMBIENT TEMP. THERMISTOR	26H	HEATER PROTECTOR(OPTION PARTS)

MUZ-HM15NA MUZ-HM18NA

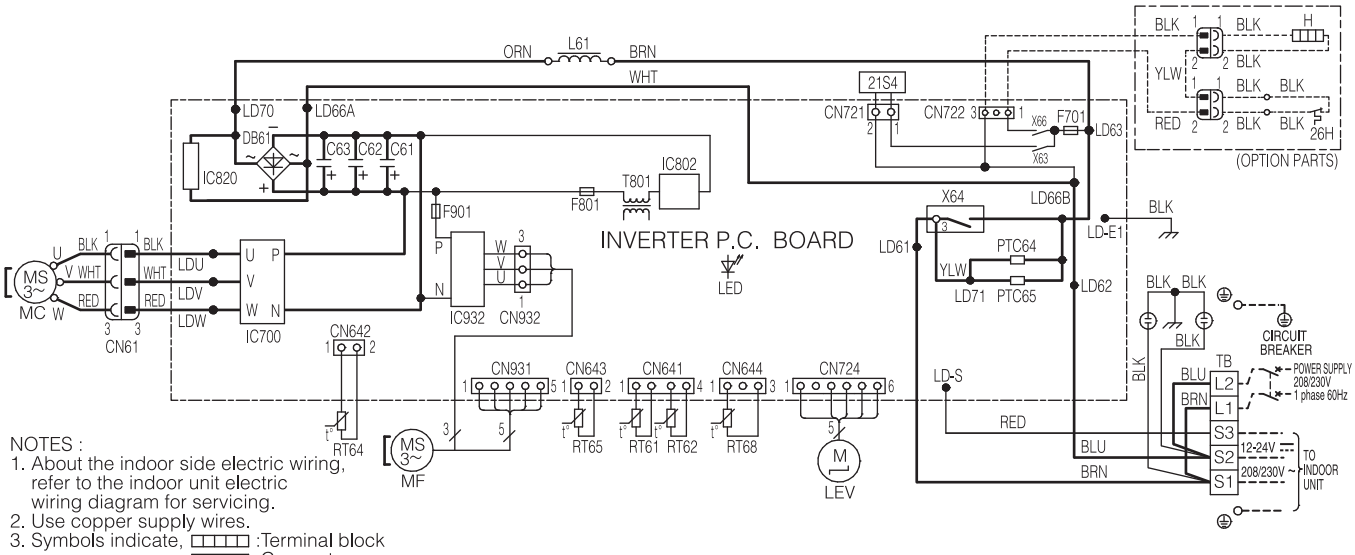

NOTES :
1. About the indoor side electric wiring, refer to the indoor unit electric wiring diagram for servicing.
2. Use copper supply wires.
3. Symbols indicate, ▭▭▭▭ :Terminal block
   ⊙⊙⊙⊙⊙ :Connector

REMARQUES :
1. Pour le câblage électronique côté intérieur, se reporter au schéma d'entretien du câblage électronique de l'appareil intérieur.
2. Utiliser des fils d'alimentation en cuivre.
3. Les symboles ont les ▭▭▭▭ :Borne
   significations suivantes, ⊙⊙⊙⊙⊙ :Connecteur

SYMBOL	NAME	SYMBOL	NAME	SYMBOL	NAME
C61,C62,C63	SMOOTHING CAPACITOR	L61	REACTOR	RT68	OUTDOOR HEAT EXCHANGER TEMP. THERMISTOR
DB61	DIODE MODULE	MC	COMPRESSOR		
F701,F801,F901	FUSE (T3. 15AL250V)	MF	FAN MOTOR	TB	TERMINAL BLOCK
H	DEFROST HEATER(OPTION PARTS)	PTC64, PTC65	CIRCUIT PROTECTION	T801	TRANSFORMER
IC700,IC820,IC932	POWER MODULE	RT61	DEFROST THERMISTOR	X63, X64, X66	RELAY
IC802	POWER DEVICE	RT62	DISCHARGE TEMP. THERMISTOR	21S4	REVERSING VALVE COIL
LED	LED	RT64	FIN TEMP. THERMISTOR	26H	HEATER PROTECTOR(OPTION PARTS)
LEV	EXPANSION VALVE COIL	RT65	AMBIENT TEMP. THERMISTOR		

MUZ-HM24NA

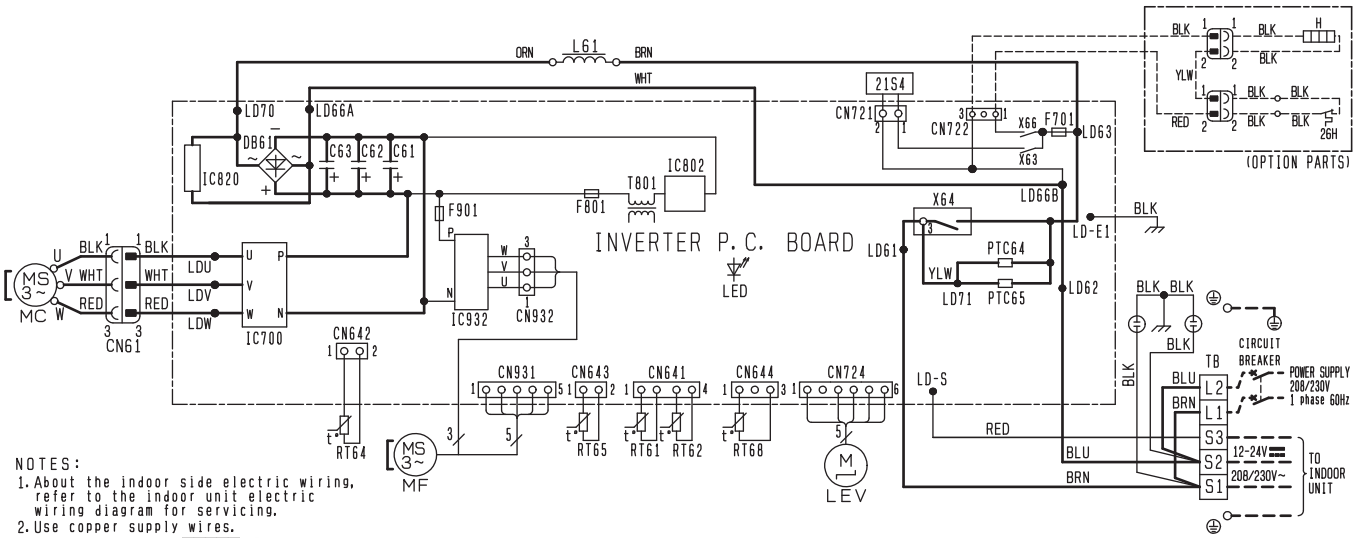

NOTES:
1. About the indoor side electric wiring, refer to the indoor unit electric wiring diagram for servicing.
2. Use copper supply wires.
3. Symbols indicate, ☐☐☐☐☐ :Terminal block
   ○○○○○ :Connector

REMARQUES:
1. Pour le câblage électronique côté intérieur, se reporter au schéma d'entretien du câblage électronique de l'appareil intérieur.
2. Utiliser des fils d'alimentation en cuivre.
3. Les symboles ont les significations suivantes, ☐☐☐☐☐ :Borne
   ○○○○○ :Connecteur

SYMBOL	NAME	SYMBOL	NAME	SYMBOL	NAME
C61, C62, C63	SMOOTHING CAPACITOR	L61	REACTOR	RT68	OUTDOOR HEAT EXCHANGER TEMP. THERMISTOR.
DB61	DIODE MODULE	MC	COMPRESSOR		
F701, F801, F901	FUSE (T3.15AL250V)	MF	FAN MOTOR	TB	TERMINAL BLOCK
H	DEFROST HEATER (OPTION PARTS)	PTC64, PTC65	CIRCUIT PROTECTION	T801	TRANSFORMER
IC700, IC820, IC932	POWER MODULE	RT61	DEFROST THERMISTOR	X63, X64, X66	RELAY
IC802	POWER DEVICE	RT62	DISCHARGE TEMP. THERMISTOR	21S4	REVERSING VALVE COIL
LED	LED	RT64	FIN TEMP. THERMISTOR	26H	HEATER PROTECTOR (OPTION PARTS)
LEV	EXPANSION VALVE COIL	RT65	AMBIENT TEMP. THERMISTOR		

MUZ-FH06NA MUZ-FH09NA MUZ-FH12NA

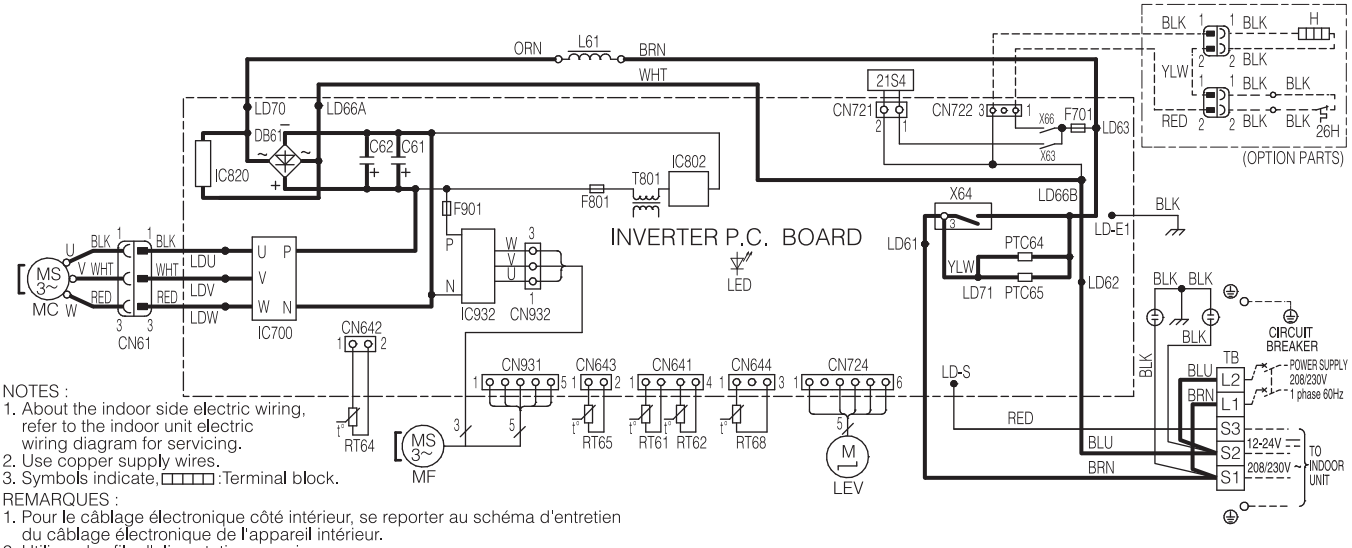

NOTES :
1. About the indoor side electric wiring, refer to the indoor unit electric wiring diagram for servicing.
2. Use copper supply wires.
3. Symbols indicate, ☐☐☐☐☐ :Terminal block.

REMARQUES :
1. Pour le câblage électronique côté intérieur, se reporter au schéma d'entretien du câblage électronique de l'appareil intérieur.
2. Utiliser des fils d'alimentation en cuivre.
3. Les symboles ont les significations suivantes, ☐☐☐☐☐ :Borne.

SYMBOL	NAME	SYMBOL	NAME	SYMBOL	NAME
C61,C62	SMOOTHING CAPACITOR	L61	REACTOR	RT68	OUTDOOR HEAT EXCHANGER TEMP. THERMISTOR
DB61	DIODE MODULE	MC	COMPRESSOR		
F701,F801,F901	FUSE (T3. 15AL250V)	MF	FAN MOTOR	TB	TERMINAL BLOCK
H	DEFROST HEATER (OPTION PARTS)	PTC64, PTC65	CIRCUIT PROTECTION	T801	TRANSFORMER
IC700,IC820,IC932	POWER MODULE	RT61	DEFROST THERMISTOR	X63, X64, X66	RELAY
IC802	POWER DEVICE	RT62	DISCHARGE TEMP. THERMISTOR	21S4	REVERSING VALVE COIL
LED	LED	RT64	FIN TEMP. THERMISTOR	26H	HEATER PROTECTOR (OPTION PARTS)
LEV	EXPANSION VALVE COIL	RT65	AMBIENT TEMP. THERMISTOR		

MUZ-FH06NAH MUZ-FH09NAH MUZ-FH12NAH

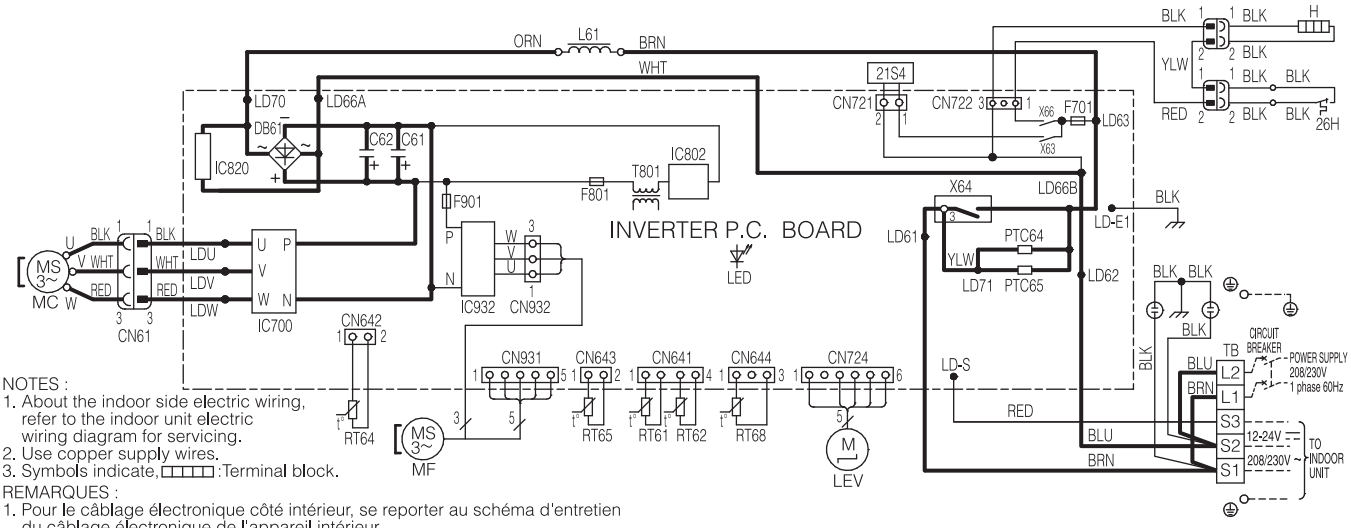

NOTES :
1. About the indoor side electric wiring, refer to the indoor unit electric wiring diagram for servicing.
2. Use copper supply wires.
3. Symbols indicate, ☐☐☐☐☐ :Terminal block.

REMARQUES :
1. Pour le câblage électronique côté intérieur, se reporter au schéma d'entretien du câblage électronique de l'appareil intérieur.
2. Utiliser des fils d'alimentation en cuivre.
3. Les symboles ont les significations suivantes, ☐☐☐☐☐ :Borne.

SYMBOL	NAME	SYMBOL	NAME	SYMBOL	NAME
C61,C62	SMOOTHING CAPACITOR	L61	REACTOR	RT68	OUTDOOR HEAT EXCHANGER TEMP. THERMISTOR
DB61	DIODE MODULE	MC	COMPRESSOR		
F701,F801,F901	FUSE (T3. 15AL250V)	MF	FAN MOTOR	TB	TERMINAL BLOCK
H	DEFROST HEATER	PTC64, PTC65	CIRCUIT PROTECTION	T801	TRANSFORMER
IC700,IC820,IC932	POWER MODULE	RT61	DEFROST THERMISTOR	X63, X64, X66	RELAY
IC802	POWER DEVICE	RT62	DISCHARGE TEMP. THERMISTOR	21S4	REVERSING VALVE COIL
LED	LED	RT64	FIN TEMP. THERMISTOR	26H	HEATER PROTECTOR
LEV	EXPANSION VALVE COIL	RT65	AMBIENT TEMP. THERMISTOR		

MUZ-FH15NA

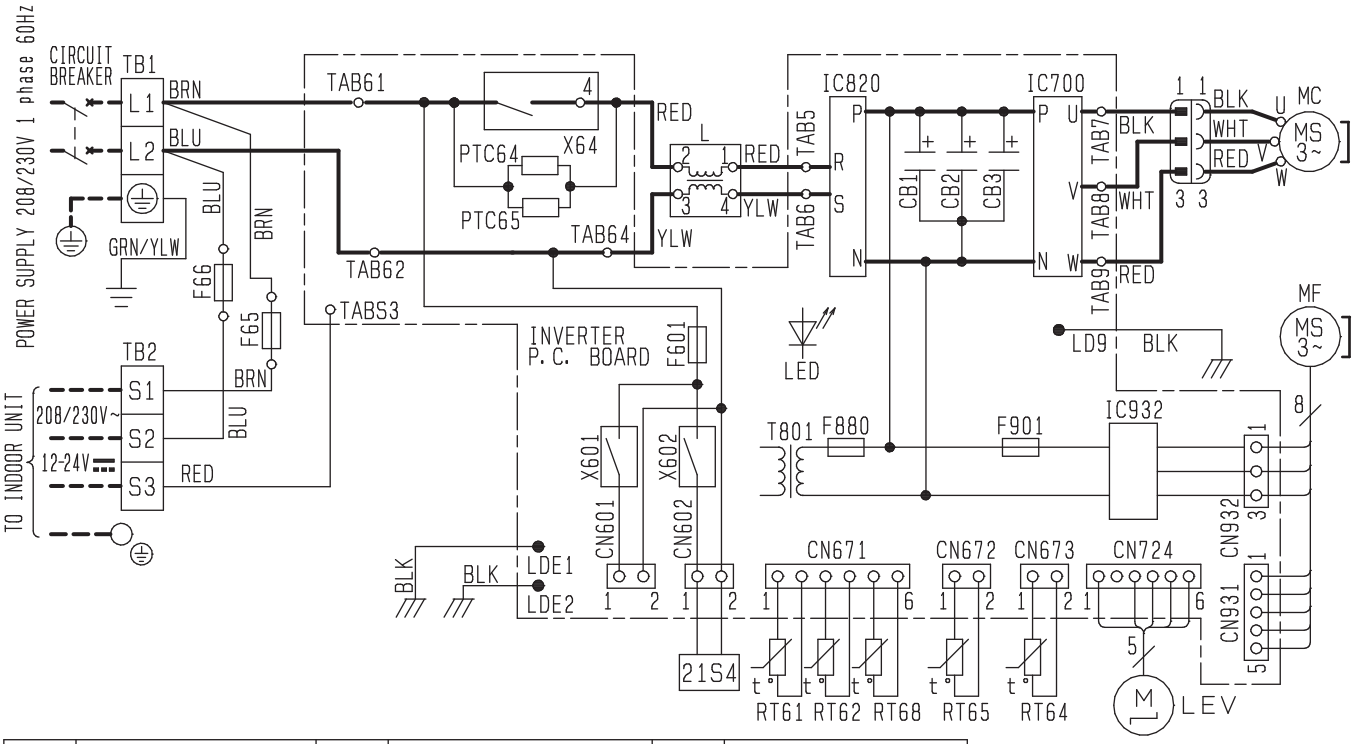

SYMBOL	NAME	SYMBOL	NAME	SYMBOL	NAME
CB1~3	SMOOTHING CAPACITOR	LED	LED	RT65	AMBIENT TEMP. THERMISTOR
F65, F66	FUSE (T6. 3AL250V)	LEV	EXPANSION VALVE COIL	RT68	OUTDOOR HEAT EXCHANGER TEMP. THERMISTOR
F601	FUSE (T3. 15AL250V)	MC	COMPRESSOR		
F880	FUSE (T3. 15AL250V)	MF	FAN MOTOR	TB1, TB2	TERMINAL BLOCK
F901	FUSE (T3. 15AL250V)	PTC64	CIRCUIT PROTECTION	T801	TRANSFORMER
IC700	IGBT Module	PTC65	CIRCUIT PROTECTION	X601	RELAY
IC820	DIODE Module	RT61	DEFROST THERMISTOR	X602	RELAY
IC932	IGBT Module	RT62	DISCHARGE TEMP. THERMISTOR	X64	RELAY
L	REACTOR	RT64	FIN TEMP. THERMISTOR	21S4	REVERSING VALVE COIL

NOTES
1. About the indoor side electric wiring, refer to the indoor unit electric wiring diagram for servicing.
2. Use copper supply wires.
3. Symbols indicate, ☐☐☐:Terminal block

REMARQUES
1. Pour le câblage électronique côté intérieur, se reporter au schéma d'entretien du câblage électronique de l'appareil intérieur.
2. Utiliser des fils d'alimentation en cuivre.
3. Les symboles ont les significations suivantes, ☐☐☐:Borne

MUZ-FH15NAH

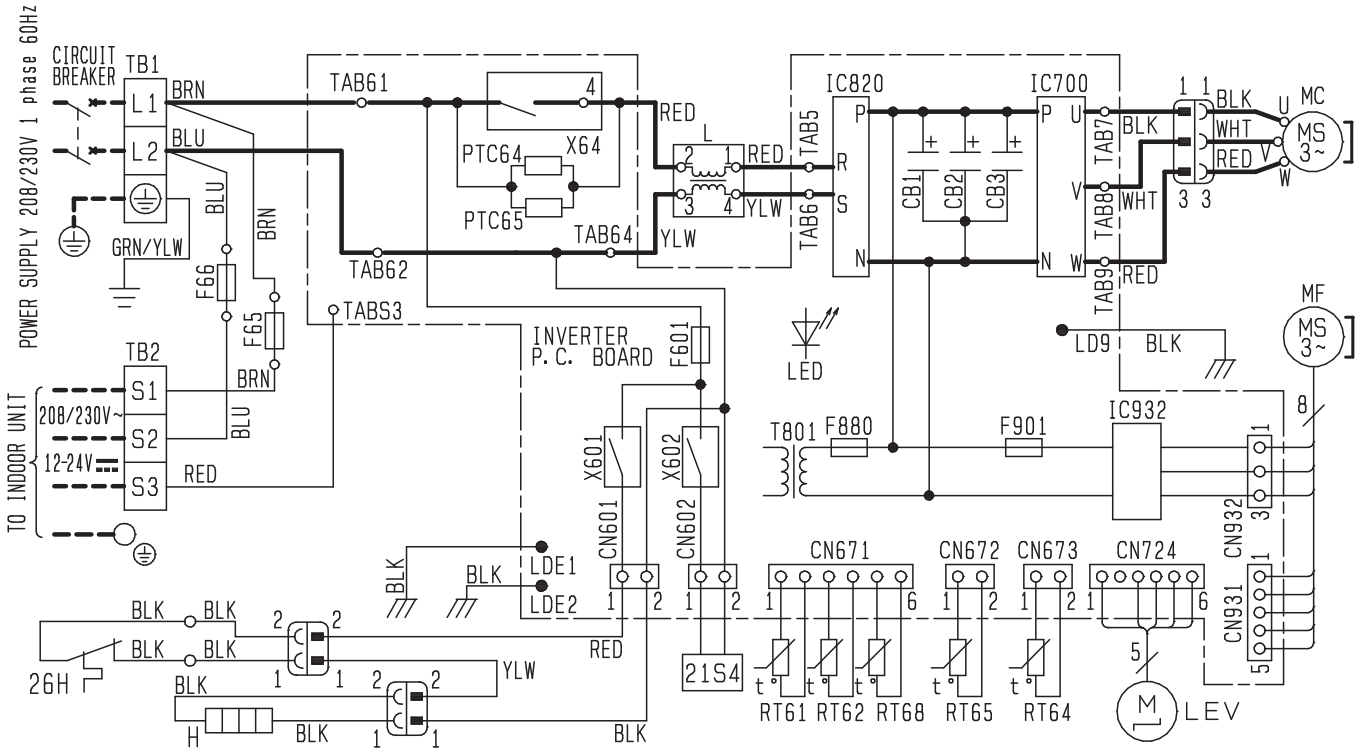

SYMBOL	NAME	SYMBOL	NAME	SYMBOL	NAME
CB1~3	SMOOTHING CAPACITOR	LED	LED	RT68	OUTDOOR HEAT EXCHANGER TEMP. THERMISTOR
F65, F66	FUSE (T6. 3AL250V)	LEV	EXPANSION VALVE COIL		
F601	FUSE (T3. 15AL250V)	MC	COMPRESSOR	TB1, TB2	TERMINAL BLOCK
F880	FUSE (T3. 15AL250V)	MF	FAN MOTOR	T801	TRANSFORMER
F901	FUSE (T3. 15AL250V)	PTC64	CIRCUIT PROTECTION	X601	RELAY
H	DEFROST HEATER	PTC65	CIRCUIT PROTECTION	X602	RELAY
IC700	IGBT Module	RT61	DEFROST THERMISTOR	X64	RELAY
IC820	DIODE Module	RT62	DISCHARGE TEMP. THERMISTOR	21S4	REVERSING VALVE COIL
IC932	IGBT Module	RT64	FIN TEMP. THERMISTOR	26H	HEATER PROTECTOR
L	REACTOR	RT65	AMBIENT TEMP. THERMISTOR		

NOTES
1. About the indoor side electric wiring, refer to the indoor unit electric wiring diagram for servicing.
2. Use copper supply wires.
3. Symbols indicate, ☐☐☐:Terminal block

REMARQUES
1. Pour le câblage électronique côté intérieur, se reporter au schéma d'entretien du câblage électronique de l'appareil intérieur.
2. Utiliser des fils d'alimentation en cuivre.
3. Les symboles ont les significations suivantes, ☐☐☐:Borne

MUZ-FH18NA2

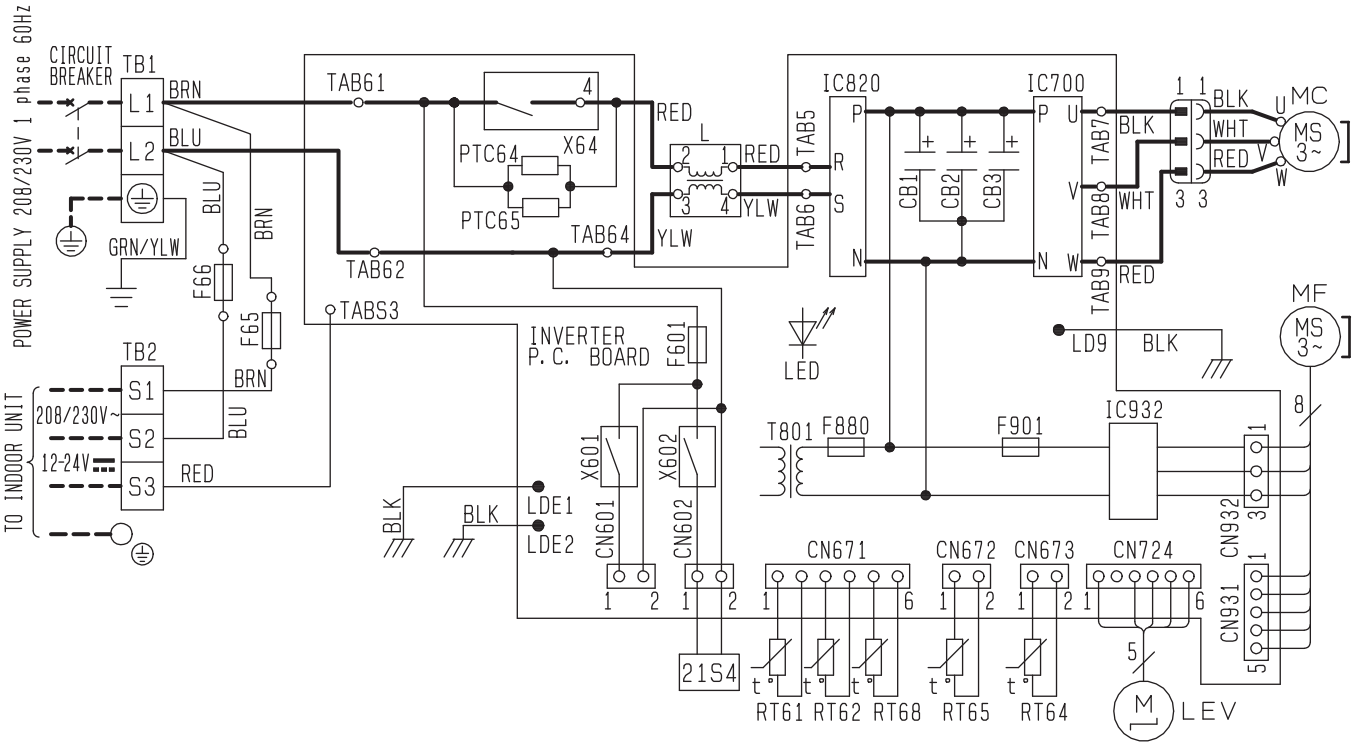

SYMBOL	NAME	SYMBOL	NAME	SYMBOL	NAME
CB1~3	SMOOTHING CAPACITOR	LED	LED	RT65	AMBIENT TEMP. THERMISTOR
F65, F66	FUSE (T6. 3AL250V)	LEV	EXPANSION VALVE COIL	RT68	OUTDOOR HEAT EXCHANGER TEMP. THERMISTOR
F601	FUSE (T3. 15AL250V)	MC	COMPRESSOR		
F880	FUSE (T3. 15AL250V)	MF	FAN MOTOR	TB1, TB2	TERMINAL BLOCK
F901	FUSE (T3. 15AL250V)	PTC64	CIRCUIT PROTECTION	T801	TRANSFORMER
IC700	IGBT Module	PTC65	CIRCUIT PROTECTION	X601	RELAY
IC820	DIODE Module	RT61	DEFROST THERMISTOR	X602	RELAY
IC932	IGBT Module	RT62	DISCHARGE TEMP. THERMISTOR	X64	RELAY
L	REACTOR	RT64	FIN TEMP. THERMISTOR	21S4	REVERSING VALVE COIL

NOTES
1. About the indoor side electric wiring, refer to the indoor unit electric wiring diagram for servicing.
2. Use copper supply wires.
3. Symbols indicate, ☐☐☐:Terminal block
   ⊙⊙⊙:Connector

REMARQUES
1. Pour le câblage électronique côté intérieur, se reporter au schéma d'entretien du câblage électronique de l'appareil intérieur.
2. Utiliser des fils d'alimentation en cuivre.
3. Les symboles ont les significations suivantes, ☐☐☐:Borne ⊙⊙⊙:Connecteur

MUZ-FH18NAH2

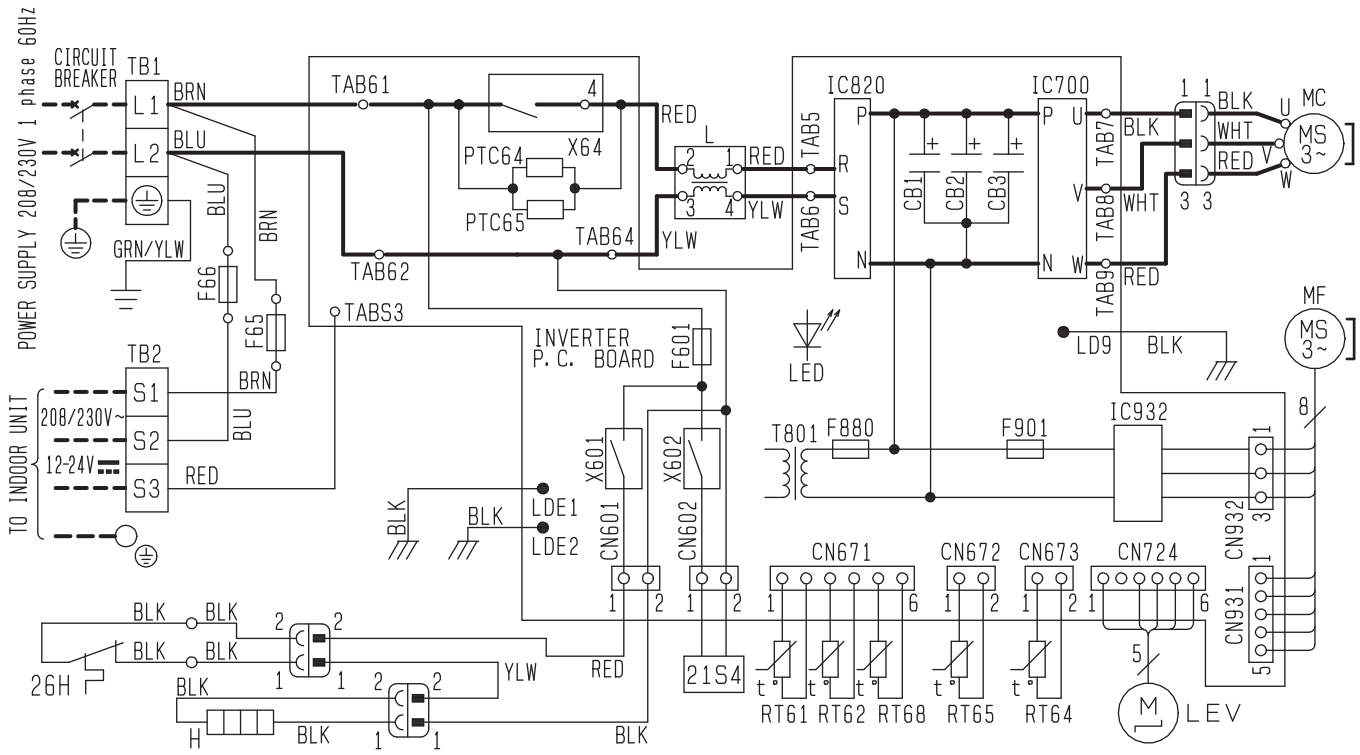

SYMBOL	NAME	SYMBOL	NAME	SYMBOL	NAME
CB1~3	SMOOTHING CAPACITOR	LED	LED	RT68	OUTDOOR HEAT EXCHANGER TEMP. THERMISTOR
F65, F66	FUSE (T6. 3AL250V)	LEV	EXPANSION VALVE COIL		
F601	FUSE (T3. 15AL250V)	MC	COMPRESSOR	TB1, TB2	TERMINAL BLOCK
F880	FUSE (T3. 15AL250V)	MF	FAN MOTOR	T801	TRANSFORMER
F901	FUSE (T3. 15AL250V)	PTC64	CIRCUIT PROTECTION	X601	RELAY
H	DEFROST HEATER	PTC65	CIRCUIT PROTECTION	X602	RELAY
IC700	IGBT Module	RT61	DEFROST THERMISTOR	X64	RELAY
IC820	DIODE Module	RT62	DISCHARGE TEMP. THERMISTOR	21S4	REVERSING VALVE COIL
IC932	IGBT Module	RT64	FIN TEMP. THERMISTOR	26H	HEATER PROTECTOR
L	REACTOR	RT65	AMBIENT TEMP. THERMISTOR		

NOTES
1. About the indoor side electric wiring, refer to the indoor unit electric wiring diagram for servicing.
2. Use copper supply wires.
3. Symbols indicate, ☐☐☐:Terminal block
   ⊙⊙⊙:Connector

REMARQUES
1. Pour le câblage électronique côté intérieur, se reporter au schéma d'entretien du câblage électronique de l'appareil intérieur.
2. Utiliser des fils d'alimentation en cuivre.
3. Les symboles ont les significations suivantes, ☐☐☐:Borne ⊙⊙⊙:Connecteur

MUZ-FE09NAH MUZ-FE12NAH

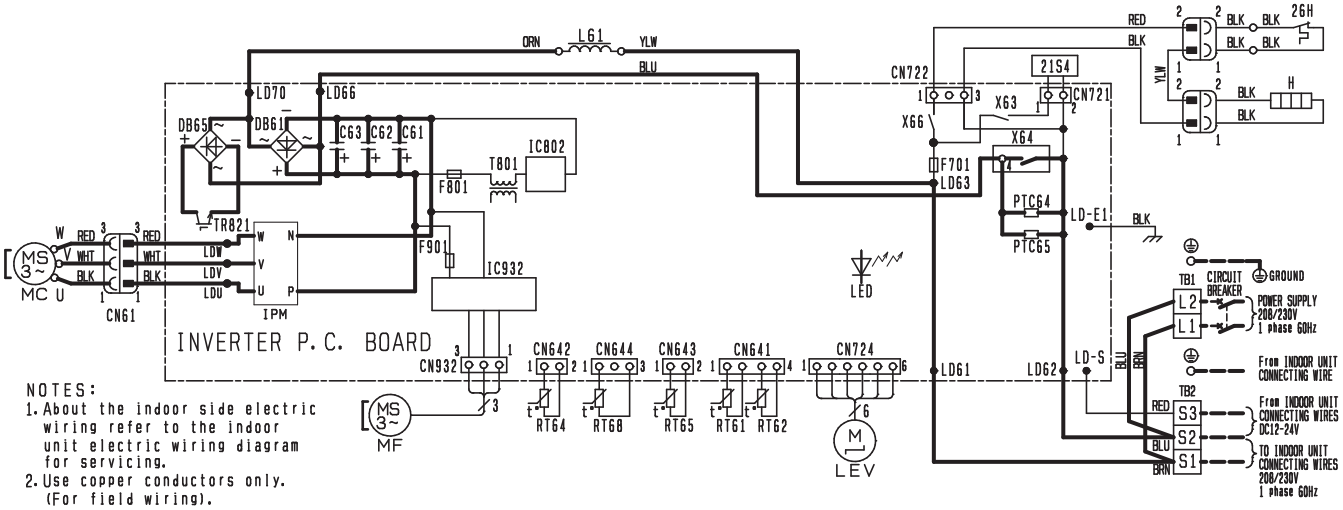

SYMBOL	NAME	SYMBOL	NAME	SYMBOL	NAME
C61, C62, C63	SMOOTHING CAPACITOR	L61	REACTOR	RT68	OUTDOOR HEAT EXCHANGER TEMP. THERMISTOR.
DB61, DB65	DIODE MODULE	MC	COMPRESSOR		
F701, F801, F901	FUSE (T3.15AL250V)	MF	FAN MOTOR	TB1, TB2	TERMINAL BLOCK
H	DEFROST HEATER	PTC64, PTC65	CIRCUIT PROTECTION	TR821	SWITCHING POWER TRANSISTOR
IC802	POWER DEVICE	RT61	DEFROST THERMISTOR	T801	TRANSFORMER
IPM, IC932	POWER MODULE	RT62	DISCHARGE TEMP. THERMISTOR	X63, X64, X66	RELAY
LED	LED	RT64	FIN TEMP. THERMISTOR	21S4	REVERSING VALVE COIL
LEV	EXPANSION VALVE COIL	RT65	AMBIENT TEMP. THERMISTOR	26H	HEATER PROTECTOR

MUZ-D30NA MUZ-D36NA

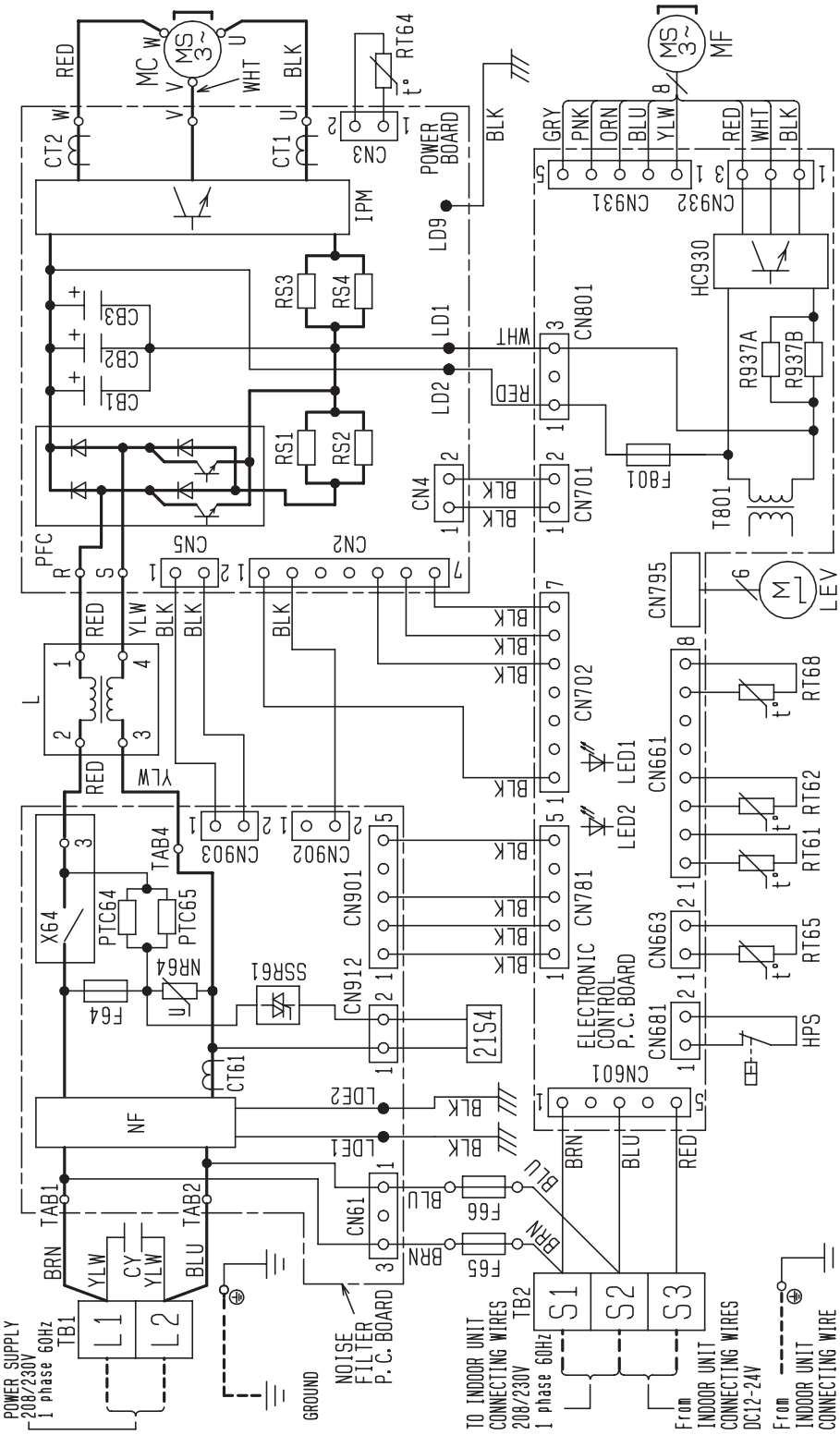

SYMBOL	NAME	SYMBOL	NAME	SYMBOL	NAME
CB1~3	SMOOTHING CAPACITOR	L	REACTOR	RT64	FIN TEMP.THERMISTOR
CT1, 2	CURRENT TRANSFORMER	LEV	EXPANSION VALVE	RT65	AMBIENT TEMP.THERMISTOR
CT61	CURRENT TRANSFORMER	MC	COMPRESSOR	RT68	OUTDOOR HEAT EXCHANGER TEMP.THERMISTOR
CY	CAPACITOR	MF	FAN MOTOR	PTC64, 65	RESISTOR
F64	FUSE(T2AL250V)	NF	NOISE FILTER	R937A, B	RESISTOR
F65, F66	FUSE(T6.3AL250V)	NR64	VARISTOR	SSR61	SOLENOID COIL RELAY
F801	FUSE(T3.15AL250V)	PFC	POWER FACTOR CONTROLLER	TB1, 2	TERMINAL BLOCK
HC930	INTELLIGENT POWER MODULE	RS1~4	RESISTOR	T801	SWITCHING TRANSFORMER
HPS	HIGH PRESSURE SWITCH	RT61	DEFROST THERMISTOR	X64	RELAY
IPM	INTELLIGENT POWER MODULE	RT62	DISCHARGE TEMP.THERMISTOR	21S4	REVERSING VALVE SOLENOID COIL

NOTES 1. About the indoor side electric wiring refer to the indoor unit electric wiring diagram for servicing.
2. Use copper conductors only(for field wiring).
3. Symbols below indicate.
□□□ : Terminal block

MUY-D30NA MUY-D36NA

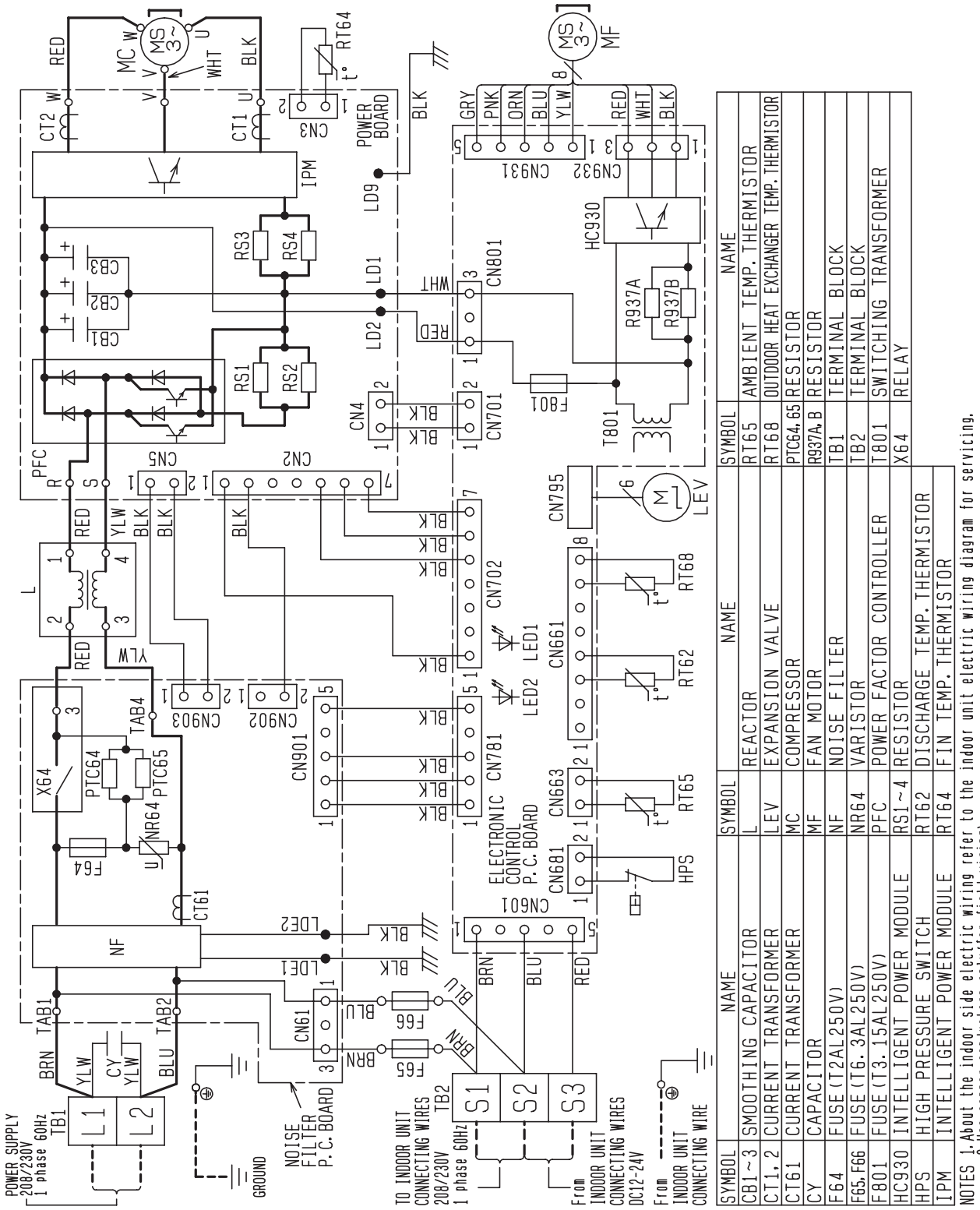

SYMBOL	NAME
CB1~3	SMOOTHING CAPACITOR
CT1, 2	CURRENT TRANSFORMER
CT61	CURRENT TRANSFORMER
CY	CAPACITOR
F64	FUSE(T2AL250V)
F65, F66	FUSE(T6.3AL250V)
F801	FUSE(T3.15AL250V)
HC930	INTELLIGENT POWER MODULE
HPS	HIGH PRESSURE SWITCH
IPM	INTELLIGENT POWER MODULE

SYMBOL	NAME
L	REACTOR
LEV	EXPANSION VALVE
MC	COMPRESSOR
MF	FAN MOTOR
NF	NOISE FILTER
NR64	VARISTOR
PFC	POWER FACTOR CONTROLLER
RS1~4	RESISTOR
RT62	DISCHARGE TEMP. THERMISTOR
RT64	FIN TEMP. THERMISTOR

SYMBOL	NAME
RT65	AMBIENT TEMP. THERMISTOR
RT68	OUTDOOR HEAT EXCHANGER TEMP. THERMISTOR
PTC64, 65	RESISTOR
R937A, B	RESISTOR
TB1	TERMINAL BLOCK
TB2	TERMINAL BLOCK
T801	SWITCHING TRANSFORMER
X64	RELAY

NOTES
1. About the indoor side electric wiring refer to the indoor unit electric wiring diagram for servicing.
2. Use copper conductors only(for field wiring).
3. Symbols below indicate,
□□□ :Terminal block

SUZ-KA09NA SUZ-KA12NA

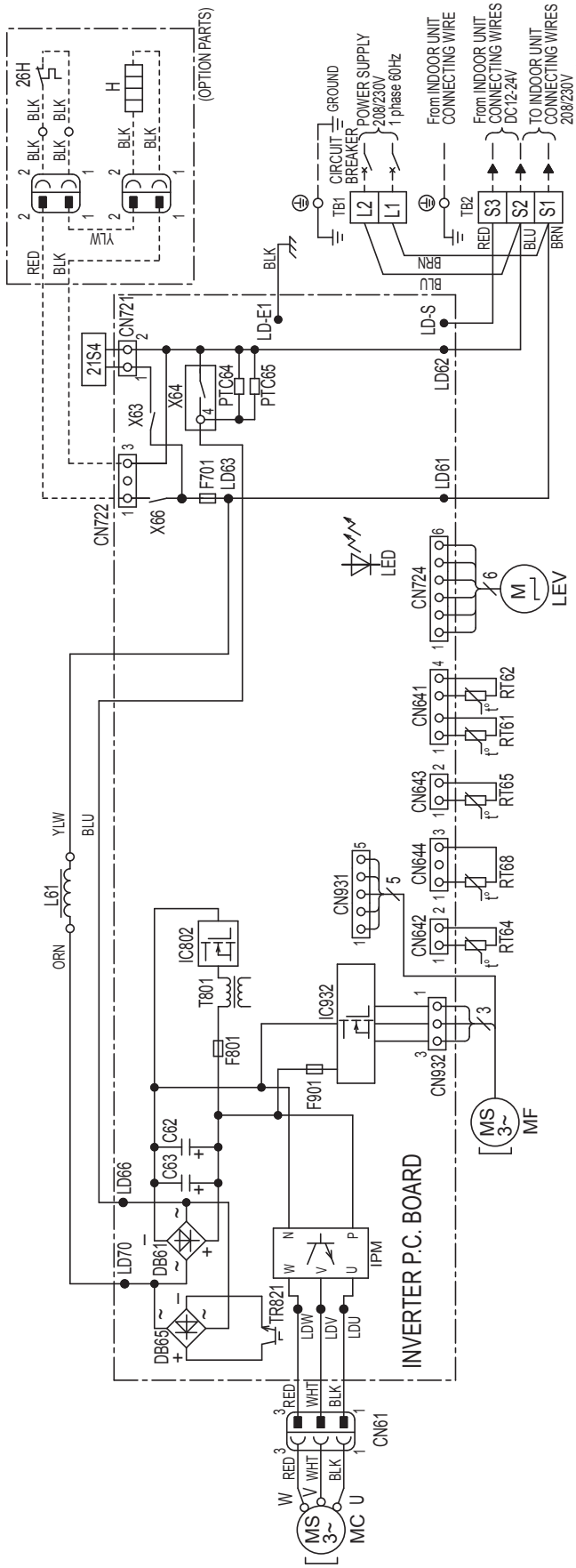

NOTES:
1. About the indoor side electric wiring, refer to the indoor unit electric wiring diagram for servicing.
2. Use copper conductors only. (For field wiring).

SYMBOL	NAME	SYMBOL	NAME	SYMBOL	NAME
C62,C63	SMOOTHING CAPACITOR	LEV	EXPANSION VALVE COIL	RT68	OUTDOOR HEAT EXCHANGER TEMP. THERMISTOR
DB61,DB65	DIODE MODULE	M/C	COMPRESSOR		
F701,F801,F901	FUSE (T3.15AL250V)	MF	FAN MOTOR	TB1,TB2	TERMINAL BLOCK
H	DEFROST HEATER(OPTION PARTS)	PTC64,PTC65	CIRCUIT PROTECTION	TR821	SWITCHING POWER TRANSISTOR
IC802	INTELLIGENT POWER DEVICE	RT61	DEFROST THERMISTOR	T801	TRANSFORMER
IPM,IC932	INTELLIGENT POWER MODULE	RT62	DISCHARGE TEMP.THERMISTOR	X63,X64,X66	RELAY
L61	REACTOR	RT64	FIN TEMP.THERMISTOR	21S4	REVERSING VALVE COIL
LED	LED	RT65	AMBIENT TEMP.THERMISTOR	26H	HEATER PROTECTOR(OPTION PARTS)

SUZ-KA15NA

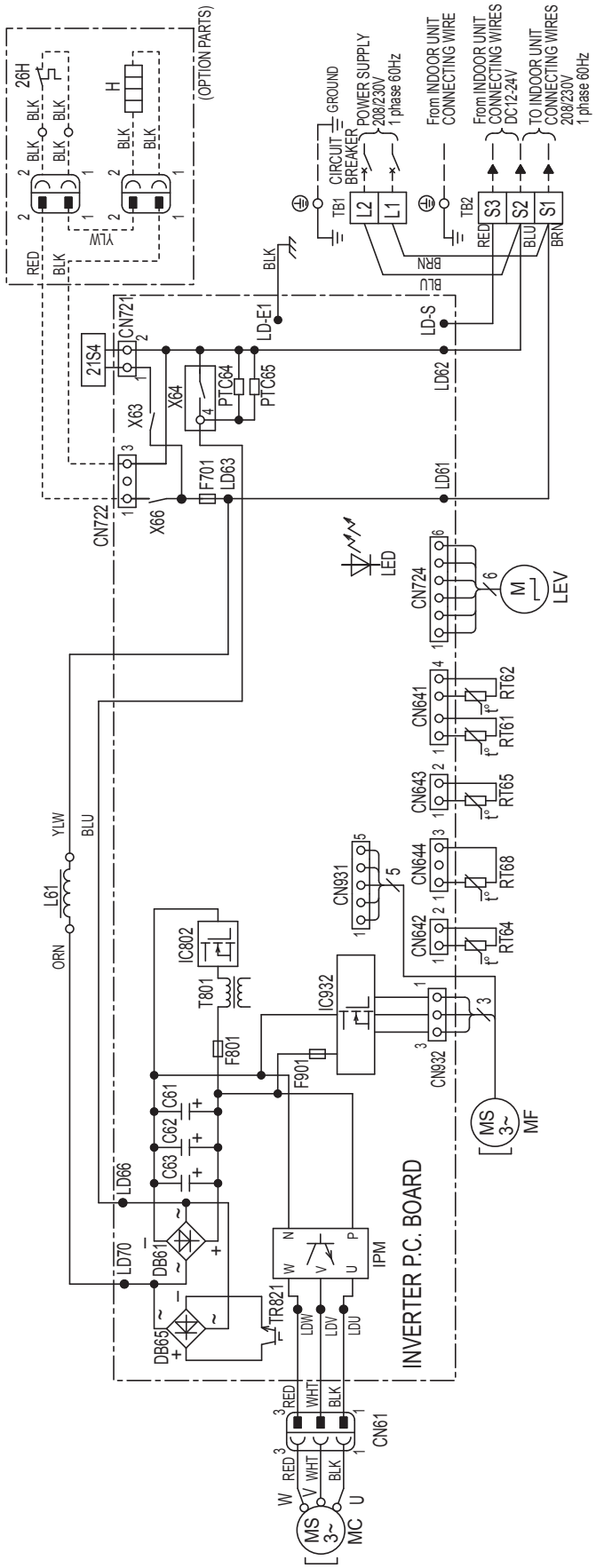

NOTES:
1. About the indoor side electric wiring, refer to the indoor unit electric wiring diagram for servicing.
2. Use copper conductors only. (For field wiring).

SYMBOL	NAME	SYMBOL	NAME	SYMBOL	NAME
C61,C62,C63	SMOOTHING CAPACITOR	LEV	EXPANSION VALVE COIL	RT68	OUTDOOR HEAT EXCHANGER TEMP. THERMISTOR.
DB61,DB65	DIODE MODULE	MC	COMPRESSOR	TB1,TB2	TERMINAL BLOCK
F701,F801,F901	FUSE (T3.15AL250V)	MF	FAN MOTOR	TR821	SWITCHING POWER TRANSISTOR
H	DEFROST HEATER(OPTION PARTS)	PTC64,PTC65	CIRCUIT PROTECTION	T801	TRANSFORMER
IC802	INTELLIGENT POWER DEVICE	RT61	DEFROST THERMISTOR	X63,X64,X66	RELAY
IPM,IC932	INTELLIGENT POWER MODULE	RT62	DISCHARGE TEMP.THERMISTOR	21S4	REVERSING VALVE COIL
L61	REACTOR	RT64	FIN TEMP.THERMISTOR	26H	HEATER PROTECTOR(OPTION PARTS)
LED	LED	RT65	AMBIENT TEMP.THERMISTOR		

SUZ-KA18NA

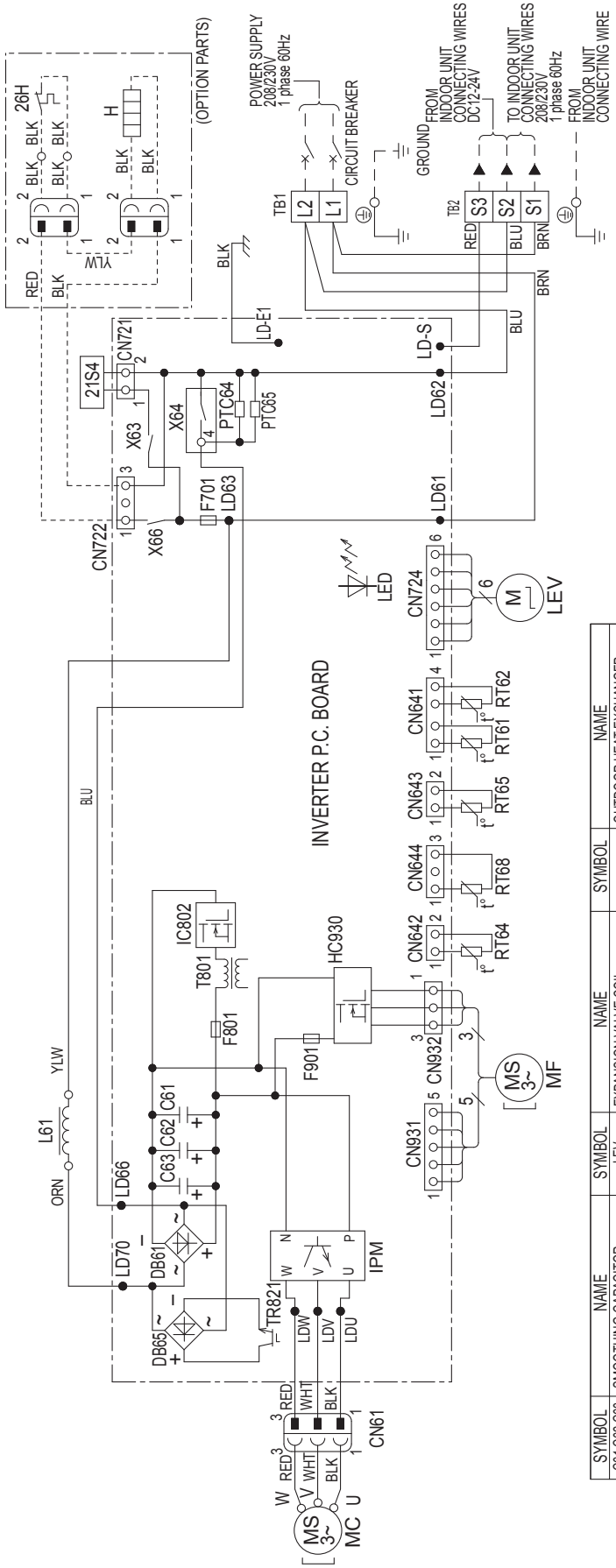

NOTES:
1. About the indoor side electric wiring, refer to the indoor unit electric wiring diagram for servicing.
2. Use copper conductors only. (For field wiring).

SYMBOL	NAME	SYMBOL	NAME	SYMBOL	NAME
C61,C62,C63	SMOOTHING CAPACITOR	LEV	EXPANSION VALVE COIL	RT68	OUTDOOR HEAT EXCHANGER TEMP. THERMISTOR.
DB61,DB65	DIODE MODULE	MC	COMPRESSOR		
F701,F801,F901	FUSE (T3.15AL250V)	MF	FAN MOTOR	TB1,TB2	TERMINAL BLOCK
H	DEFROST HEATER(OPTION PARTS)	PTC64,PTC65	CIRCUIT PROTECTION	TR821	SWITCHING POWER TRANSISTOR
IC802	INTELLIGENT POWER DEVICE	RT61	DEFROST THERMISTOR	T801	TRANSFORMER
IPM, HC930	INTELLIGENT POWER MODULE	RT62	DISCHARGE TEMP.THERMISTOR	X63,X64,X66	RELAY
L61	REACTOR	RT64	FIN TEMP.THERMISTOR	21S4	REVERSING VALVE COIL
LED	LED	RT65	AMBIENT TEMP.THERMISTOR	26H	HEATER PROTECTOR(OPTION PARTS)

MUFZ-KJ09NAHZ MUFZ-KJ12NAHZ

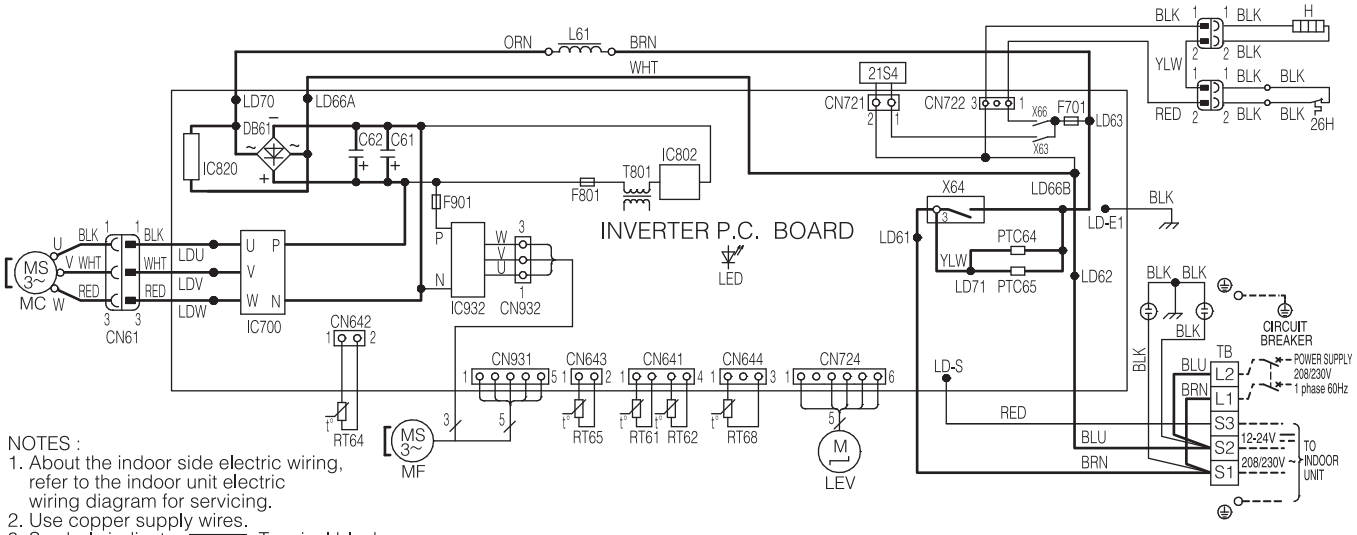

NOTES :
1. About the indoor side electric wiring, refer to the indoor unit electric wiring diagram for servicing.
2. Use copper supply wires.
3. Symbols indicate, ☐☐☐☐☐ :Terminal block
   ⊙⊙⊙⊙⊙ :Connector

REMARQUES :
1. Pour le câblage électronique côté intérieur, se reporter au schéma d'entretien du câblage électronique de l'appareil intérieur.
2. Utiliser des fils d'alimentation en cuivre.
3. Les symboles ont les significations suivantes, ☐☐☐☐☐ :Borne
   ⊙⊙⊙⊙⊙ :Connecteur

SYMBOL	NAME	SYMBOL	NAME	SYMBOL	NAME
C61,C62	SMOOTHING CAPACITOR	L61	REACTOR	RT68	OUTDOOR HEAT EXCHANGER TEMP. THERMISTOR
DB61	DIODE MODULE	MC	COMPRESSOR		
F701,F801,F901	FUSE (T3. 15AL250V)	MF	FAN MOTOR	TB	TERMINAL BLOCK
H	DEFROST HEATER	PTC64, PTC65	CIRCUIT PROTECTION	T801	TRANSFORMER
IC700,IC820,IC932	POWER MODULE	RT61	DEFROST THERMISTOR	X63, X64, X66	RELAY
IC802	POWER DEVICE	RT62	DISCHARGE TEMP. THERMISTOR	21S4	REVERSING VALVE COIL
LED	LED	RT64	FIN TEMP. THERMISTOR	26H	HEATER PROTECTOR
LEV	EXPANSION VALVE COIL	RT65	AMBIENT TEMP. THERMISTOR		

MUFZ-KJ15NAHZ MUFZ-KJ18NAHZ

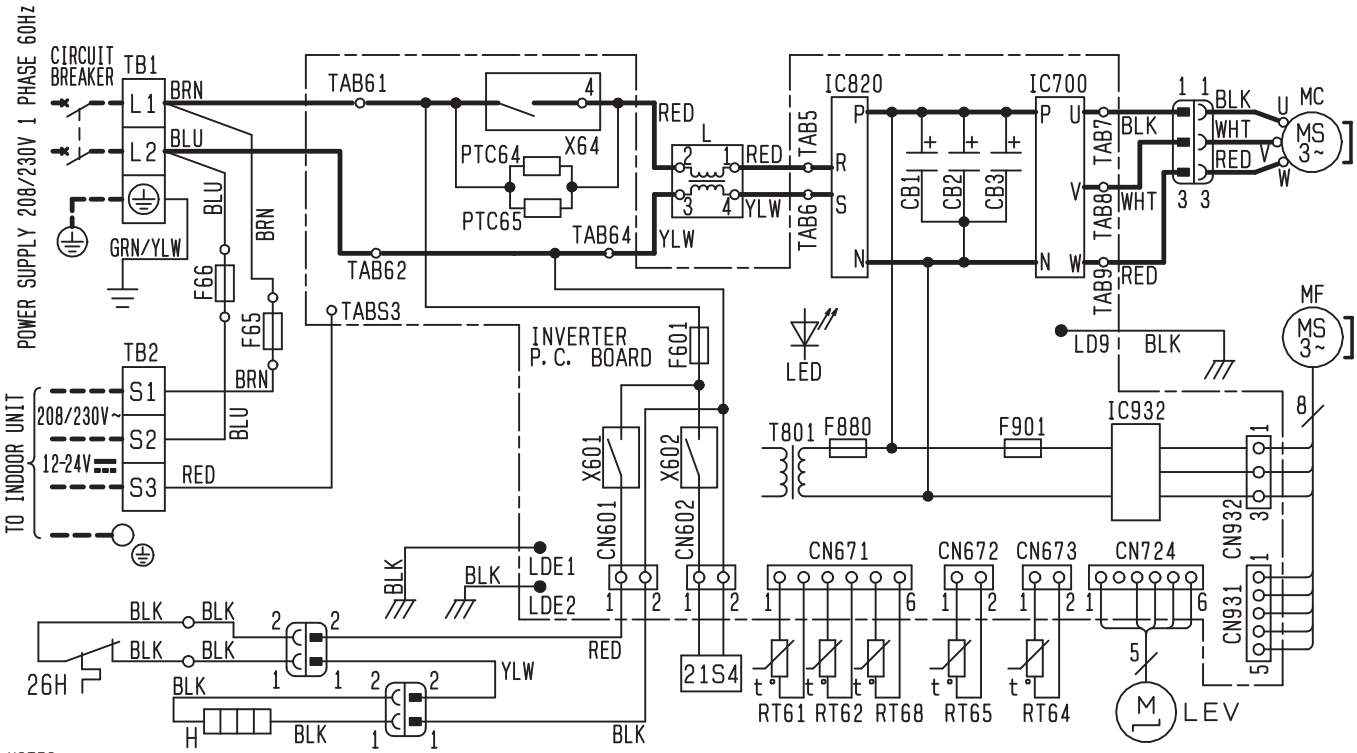

NOTES
1. About the indoor side electric wiring, refer to the indoor unit electric wiring diagram for servicing.
2. Use copper supply wires.
3. Symbols indicate, ⊏⊐⊏⊐:Terminal block ⊡⊡⊡:Connector

REMARQUES
1. Pour le câblage électronique côté intérieur, se reporter au schéma d'entretien du câblage électronique de l'appareil intérieur.
2. Utiliser des fils d'alimentation en cuivre.
3. Les symboles ont les significations suivantes, ⊏⊐⊏⊐:Borne ⊡⊡⊡:Connecteur

SYMBOL	NAME	SYMBOL	NAME	SYMBOL	NAME
CB1~3	SMOOTHING CAPACITOR	LED	LED	RT68	OUTDOOR HEAT EXCHANGER TEMP. THERMISTOR
F65, F66	FUSE (T6. 3AL250V)	LEV	EXPANSION VALVE COIL		
F601	FUSE (T3. 15AL250V)	MC	COMPRESSOR	TB1, TB2	TERMINAL BLOCK
F880	FUSE (T3. 15AL250V)	MF	FAN MOTOR	T801	TRANSFORMER
F901	FUSE (T3. 15AL250V)	PTC64	CIRCUIT PROTECTION	X601	RELAY
H	DEFROST HEATER	PTC65	CIRCUIT PROTECTION	X602	RELAY
IC700	IGBT MODULE	RT61	DEFROST THERMISTOR	X64	RELAY
IC820	DIODE MODULE	RT62	DISCHARGE TEMP. THERMISTOR	21S4	REVERSING VALVE COIL
IC932	IGBT MODULE	RT64	FIN TEMP. THERMISTOR	26H	HEATER PROTECTOR
L	REACTOR	RT65	AMBIENT TEMP. THERMISTOR		

6 REFRIGERANT SYSTEM DIAGRAM

6-1. INDOOR UNIT

Unit: inch (mm)

MS-A09WA MS-A12WA

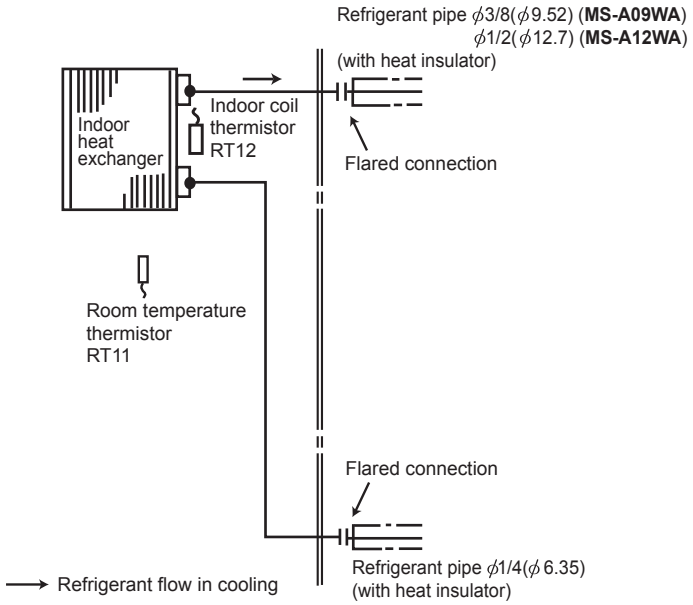

MSZ-GL06NA MSZ-GL09NA MSZ-GL12NA MSZ-GL15NA
MSY-GL09NA MSY-GL12NA MSY-GL15NA

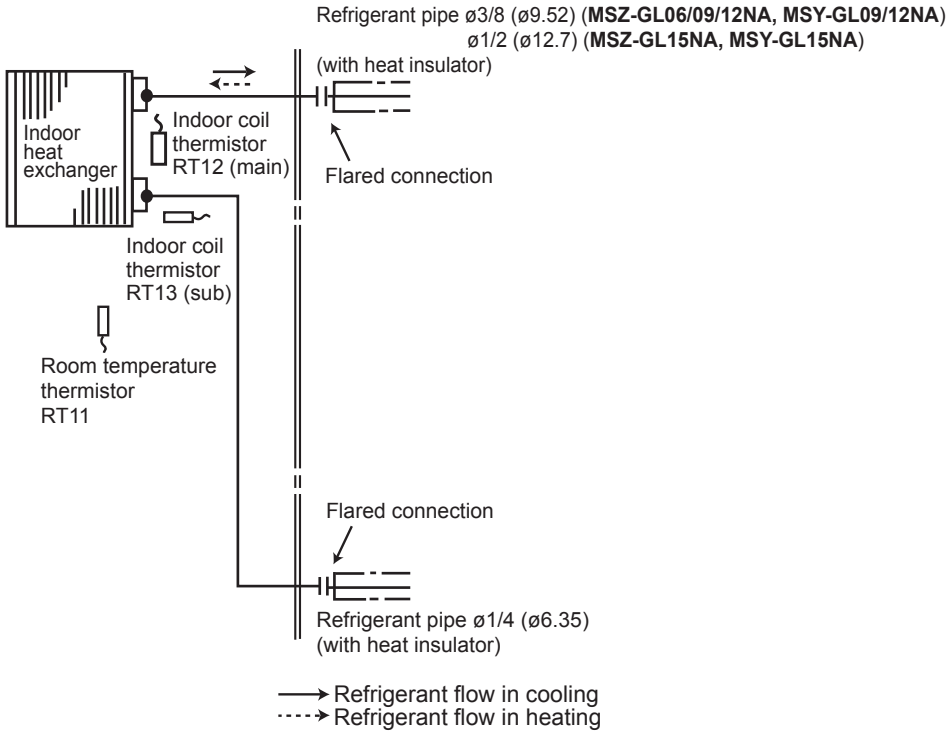

MSZ-GL18NA
MSY-GL18NA

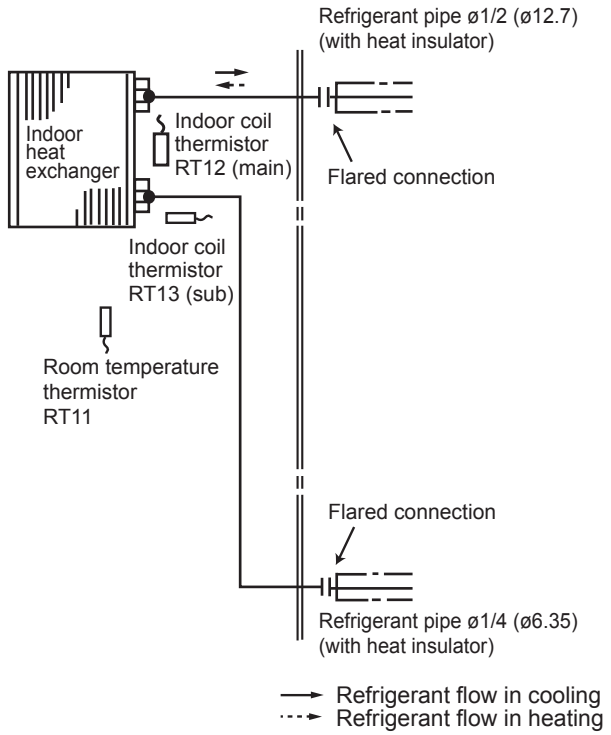

MSZ-GL24NA
MSY-GL24NA

Unit: inch (mm)

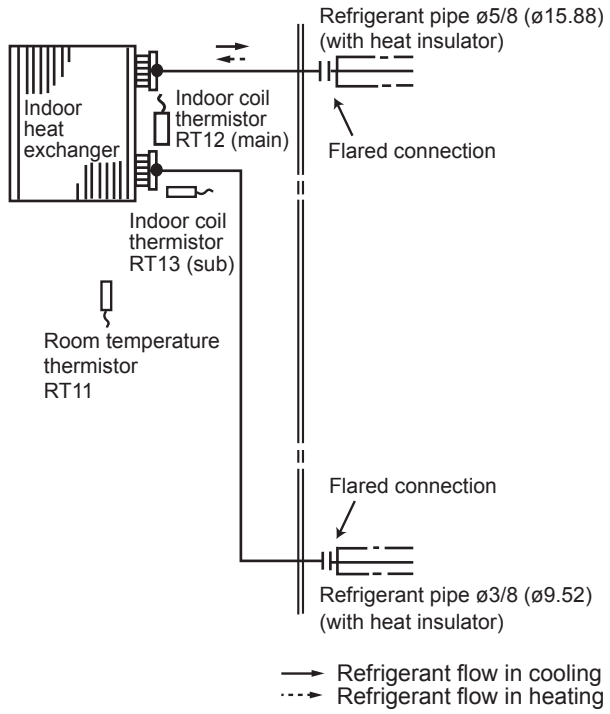

MSZ-HM09NA MSZ-HM12NA MSZ-HM15NA

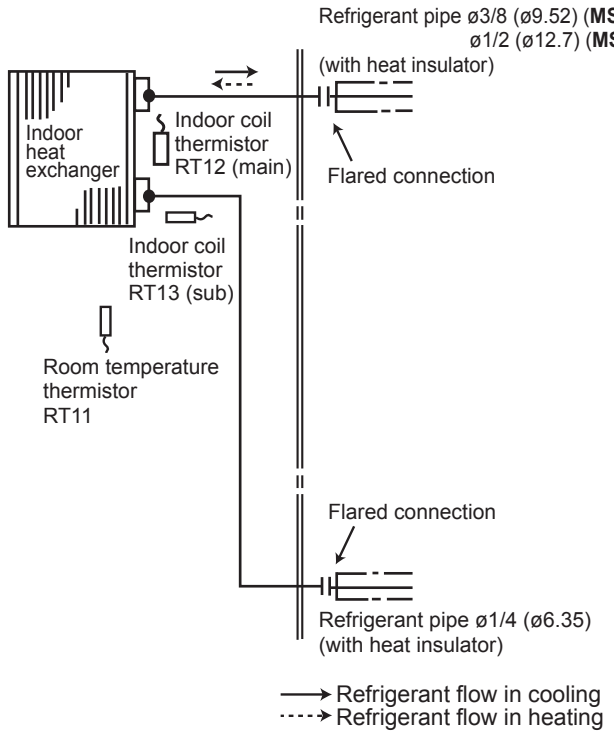

MSZ-HM18NA MSZ-HM24NA

Unit: inch (mm)

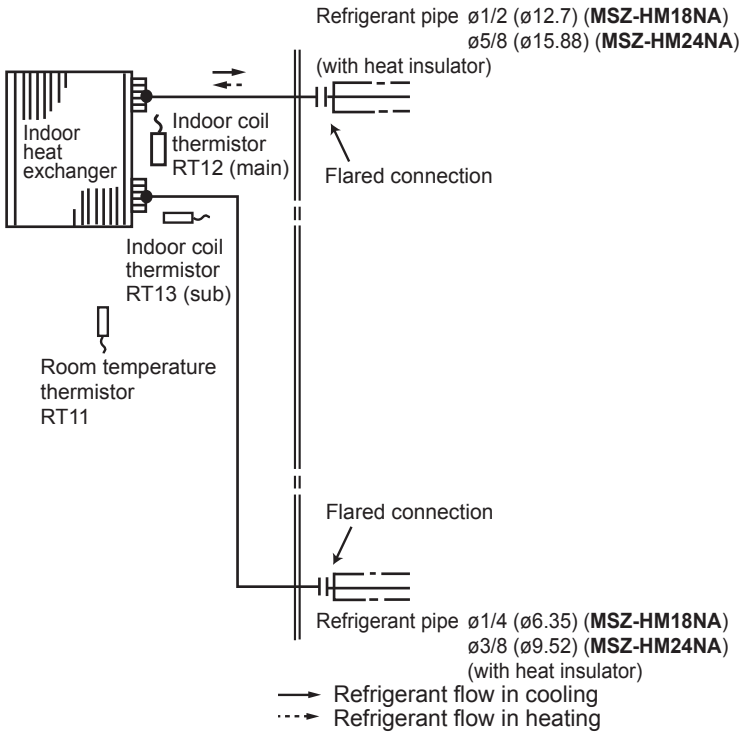

MSZ-FH06NA MSZ-FH09NA MSZ-FH12NA

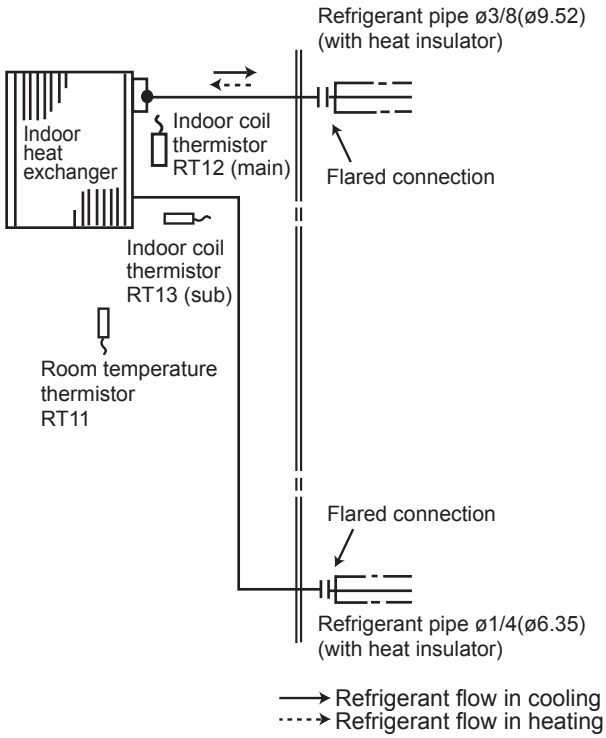

MSZ-FH15NA MSZ-FH18NA2

Unit: inch (mm)

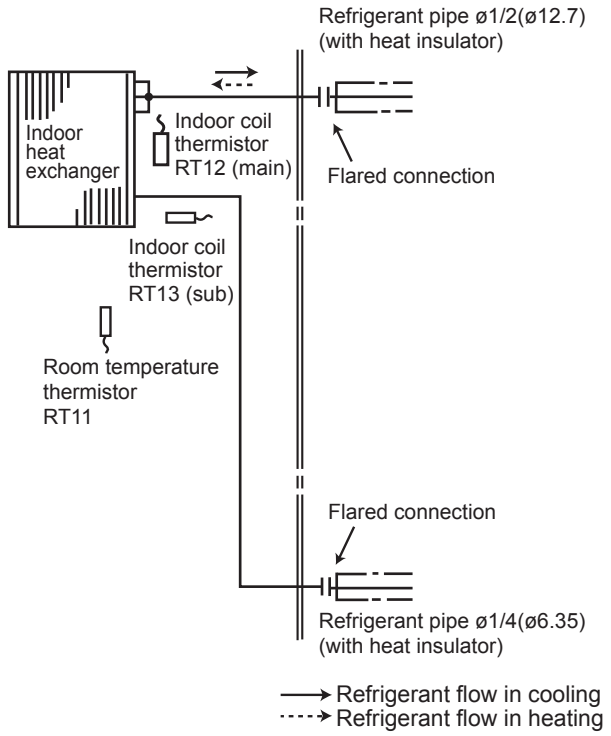

MSZ-FE09NA MSZ-FE12NA

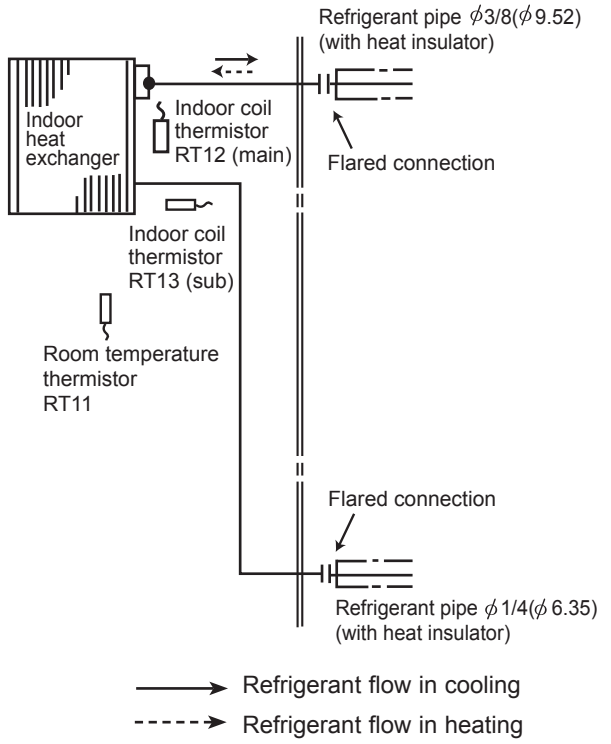

MSZ-D30NA MSZ-D36NA MSY-D30NA MSY-D36NA

Unit: inch (mm)

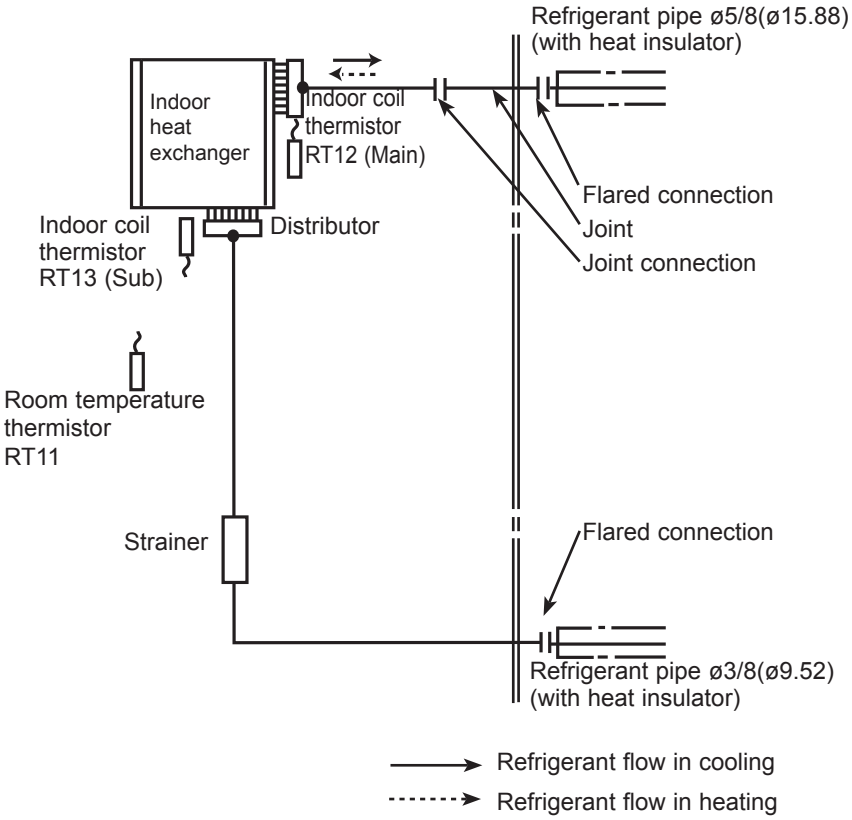

SEZ-KD09NA4 SEZ-KD12NA4 SEZ-KD15NA4 SEZ-KD18NA4

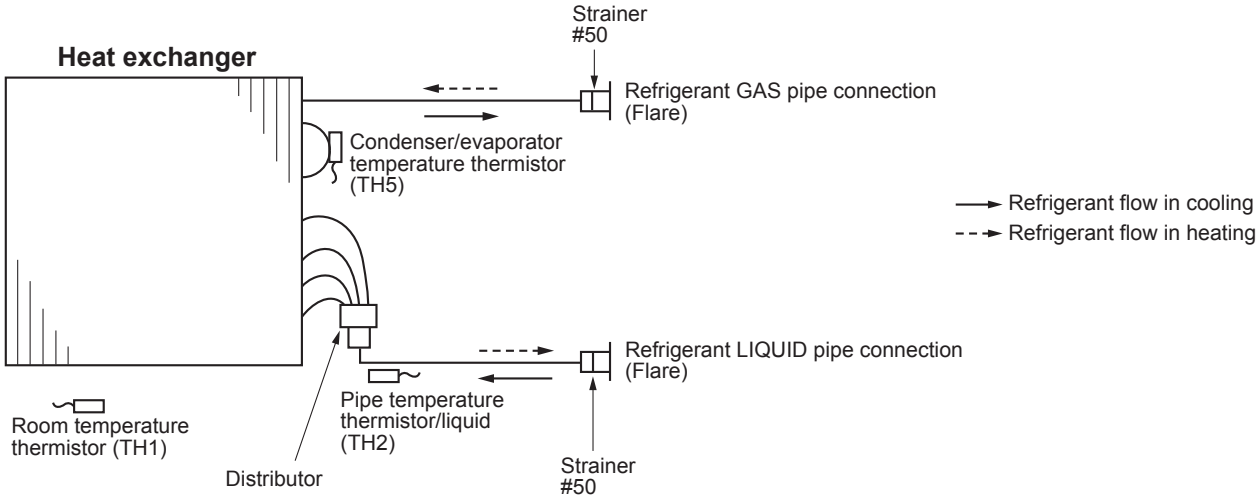

SLZ-KA09NA SLZ-KA12NA SLZ-KA15NA
PEAD-A09AA7 PEAD-A12AA7 PEAD-A15AA7 PEAD-A18AA7

Unit: inch (mm)

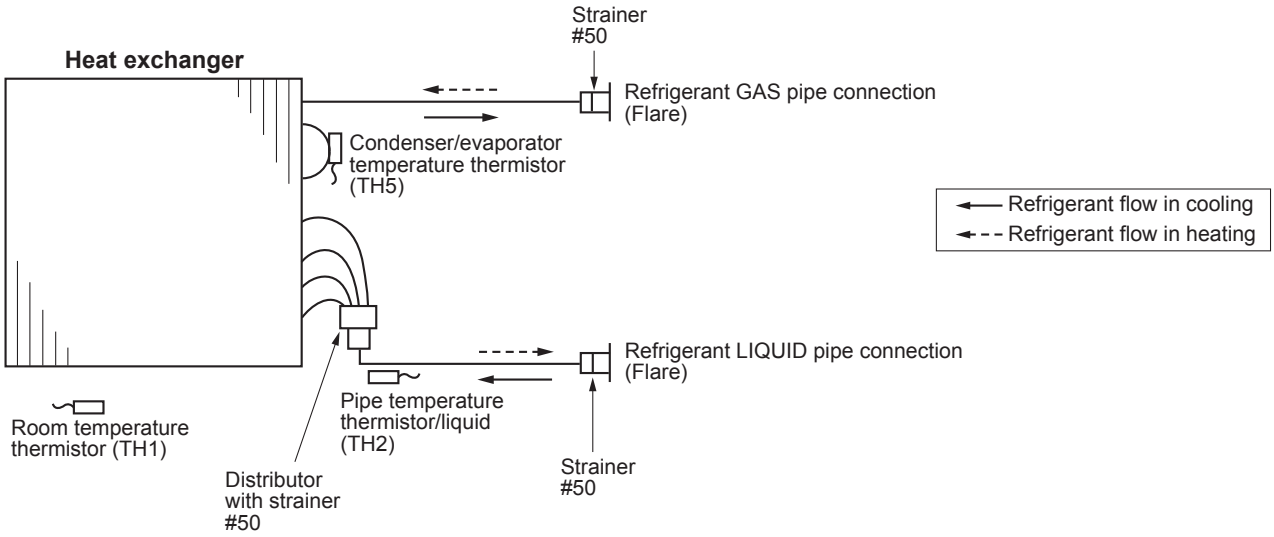

SVZ-KP12NA SVZ-KP18NA

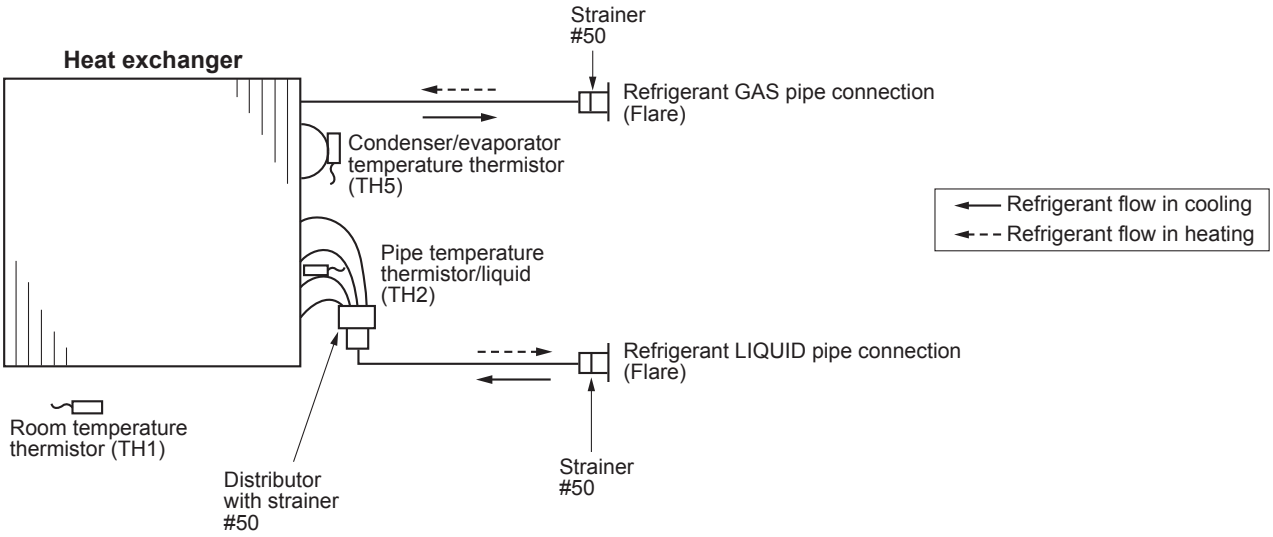

MFZ-KJ09NA MFZ-KJ12NA MFZ-KJ15NA MFZ-KJ18NA

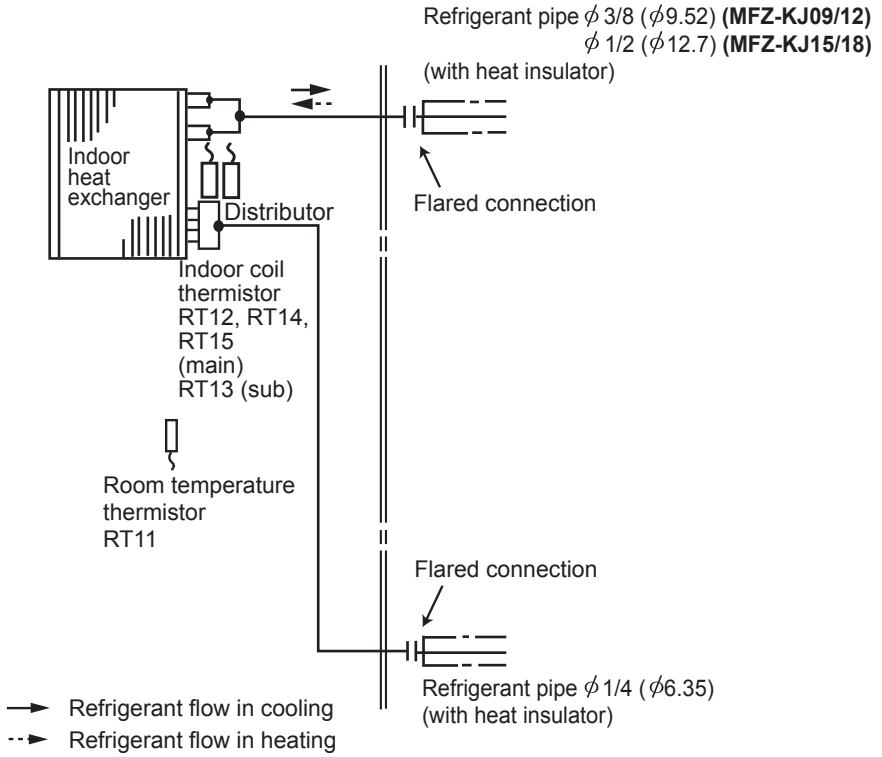

6-2. OUTDOOR UNIT

Unit: inch (mm)

MU-A09WA

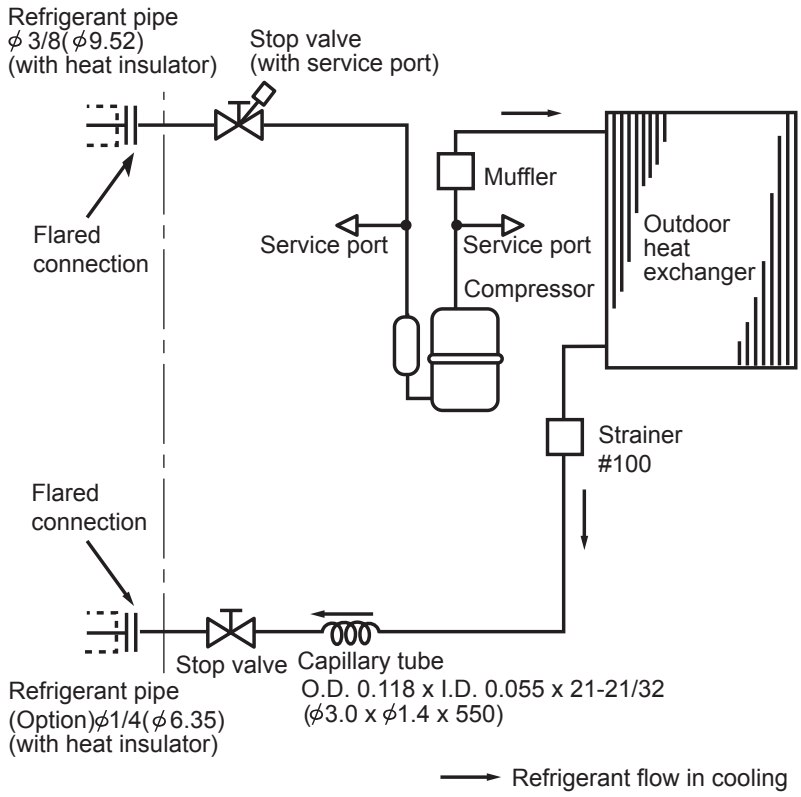

MU-A12WA

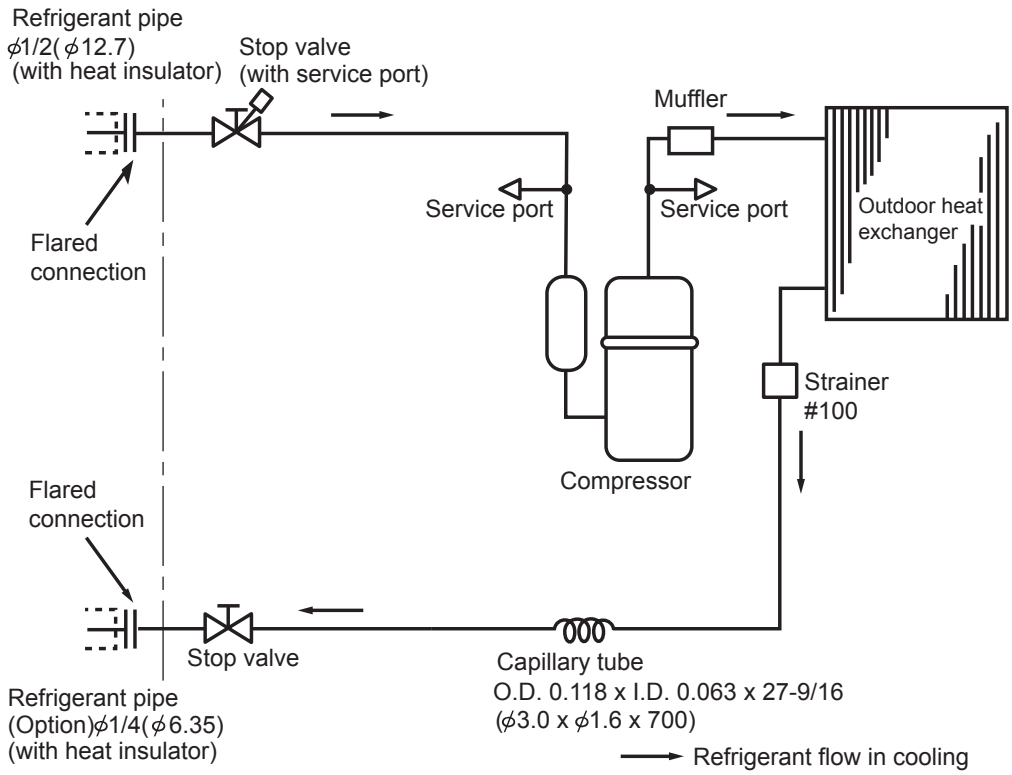

MUZ-GL09NA MUZ-GL09NAH MUY-GL09NA
MUZ-GL12NA MUZ-GL12NAH MUY-GL12NA
MUZ-GL15NA MUZ-GL15NAH MUY-GL15NA

Unit: inch (mm)

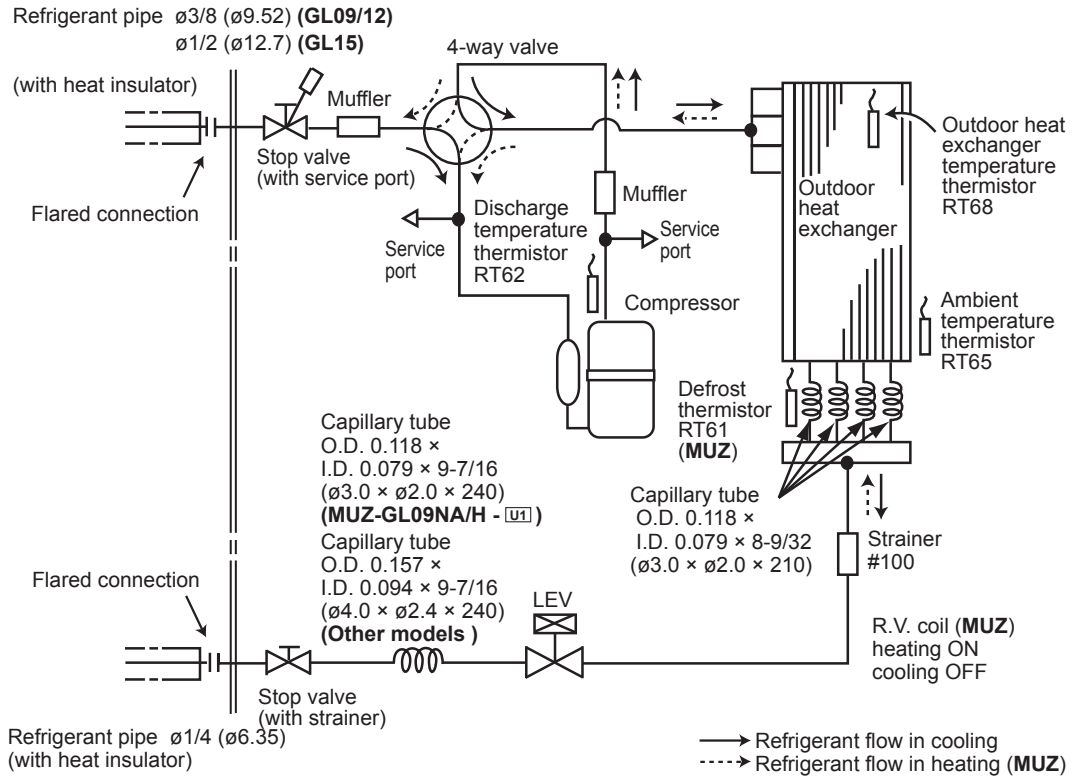

MUZ-GL18NA MUZ-GL18NAH MUY-GL18NA

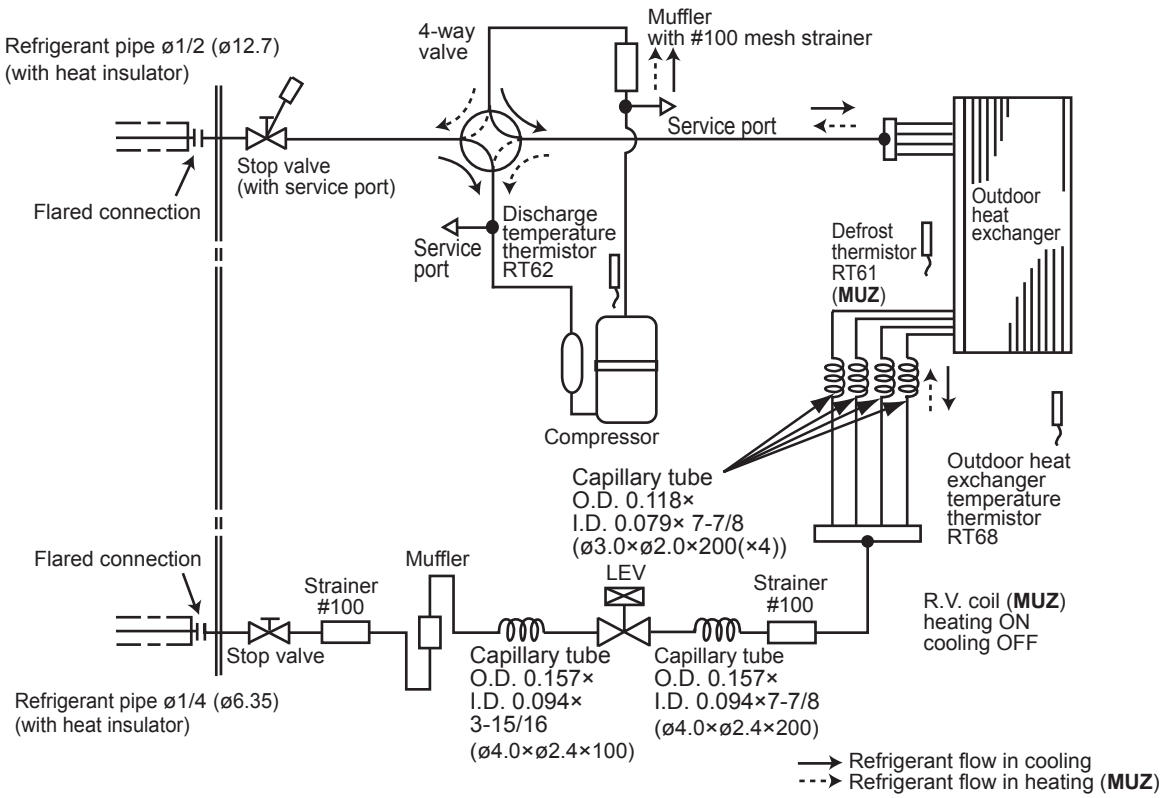

MUZ-GL24NA MUY-GL24NA

Unit: inch (mm)

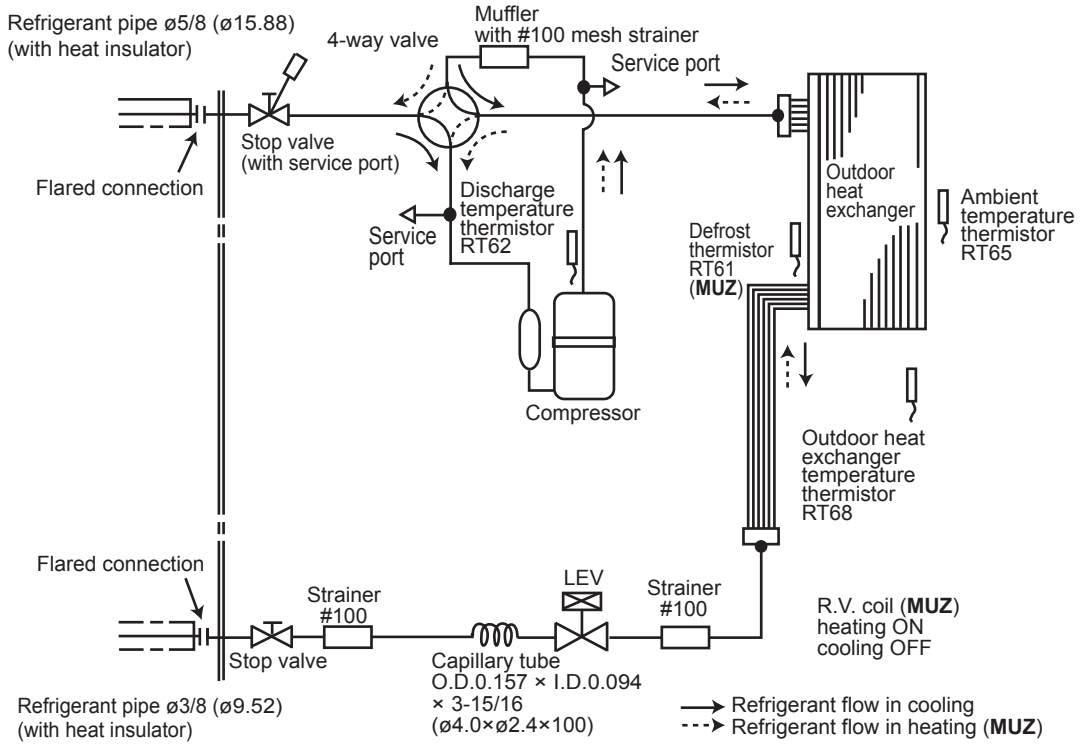

MUZ-GL24NAH

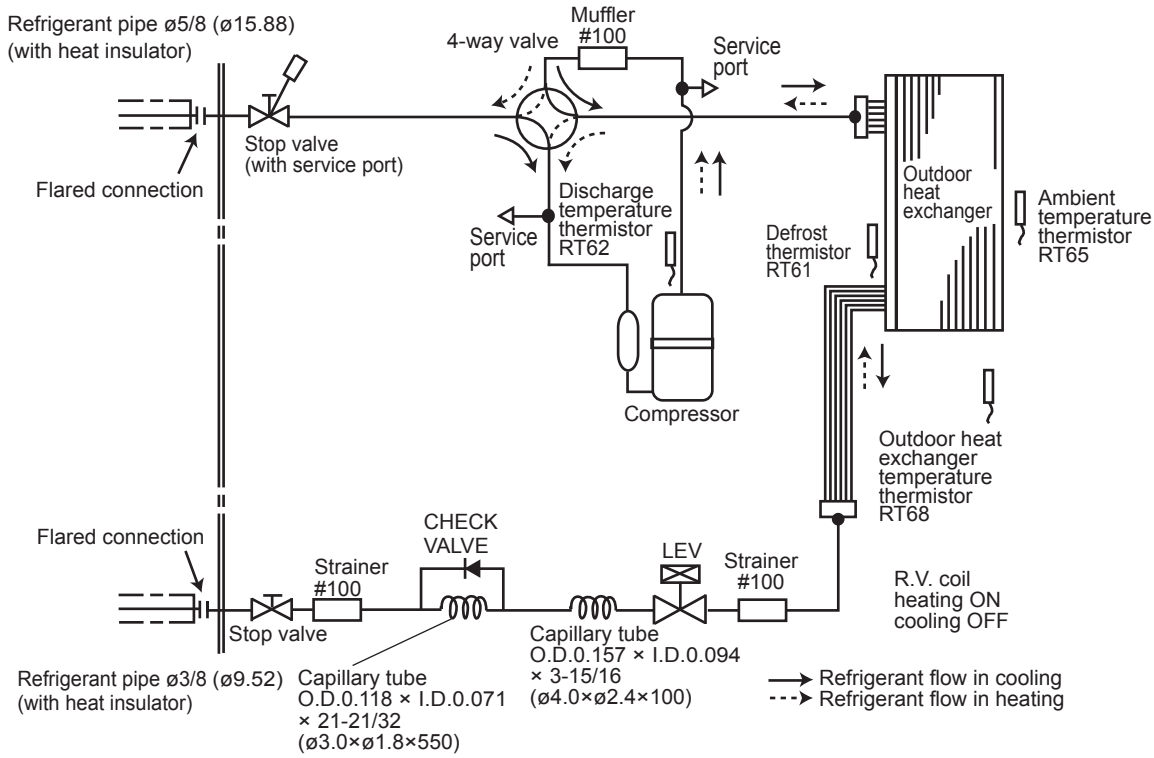

MUZ-HM09NA - U1 MUZ-HM12NA - U1

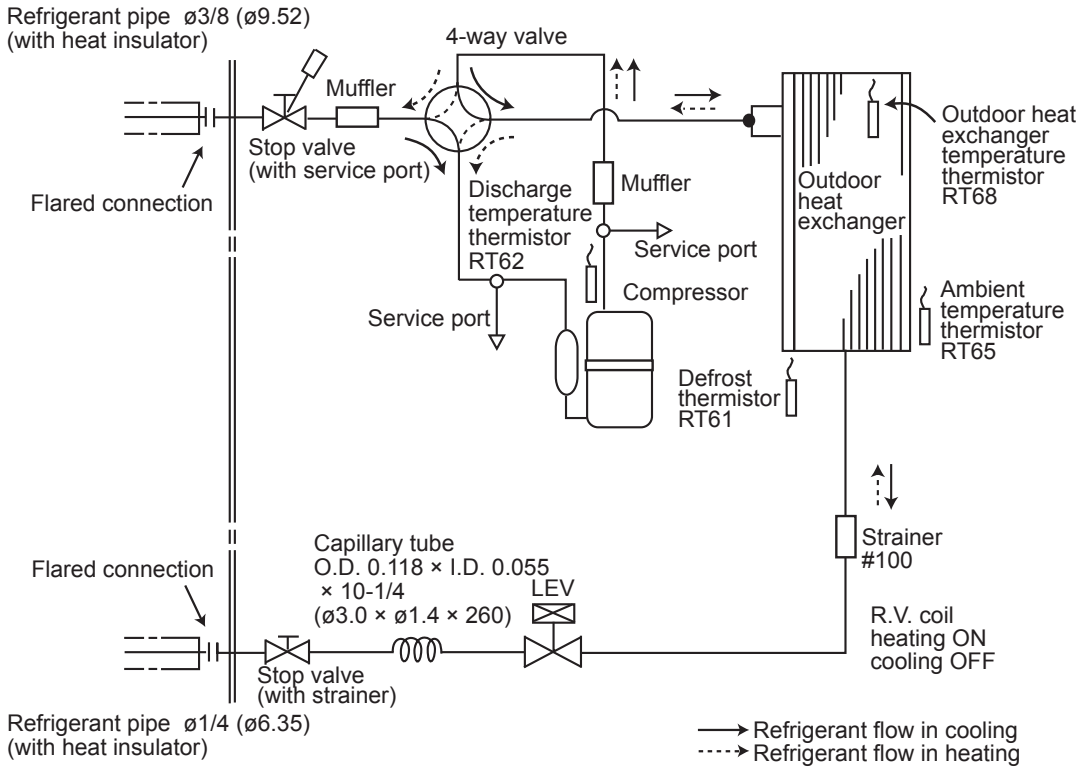

MUZ-HM09NA - U8

Unit: Inch (mm)

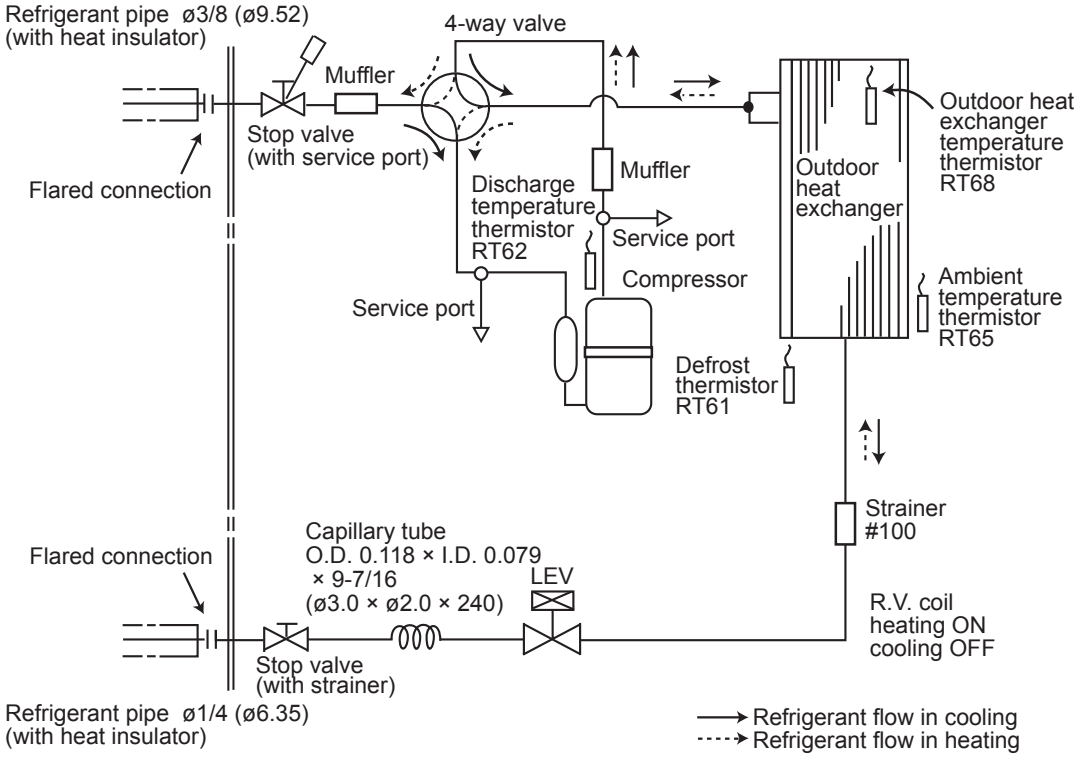

MUZ-HM12NA - U8

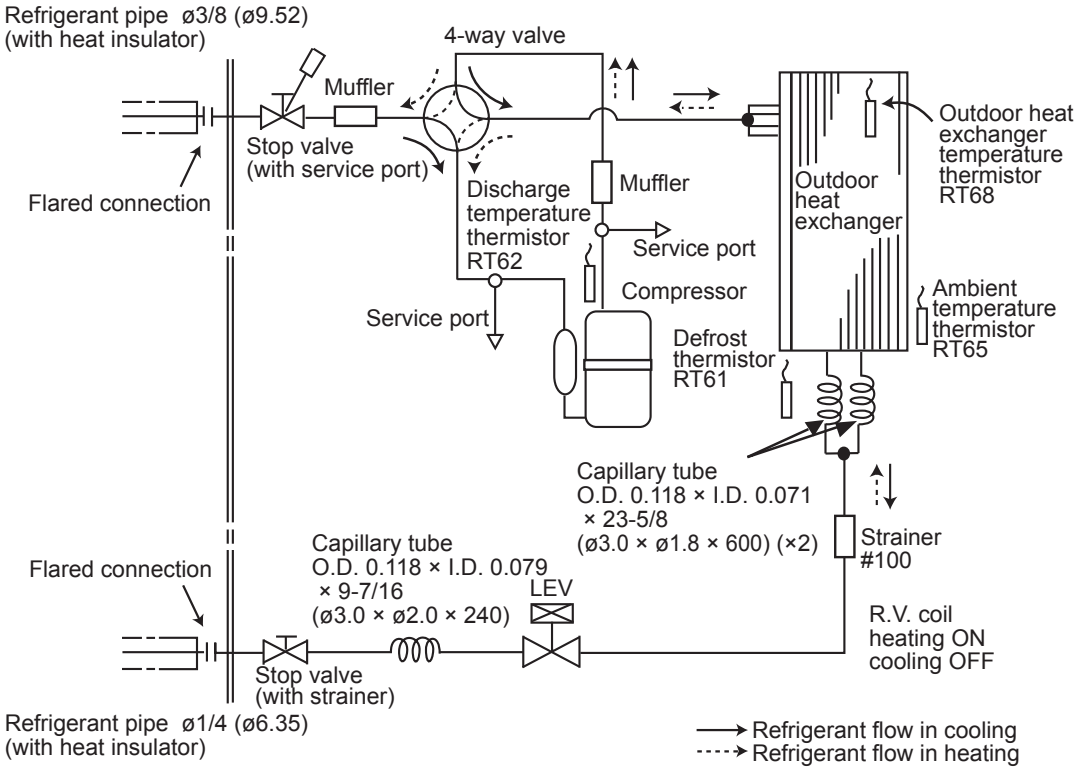

MUZ-HM15NA MUZ-HM18NA

Unit: Inch (mm)

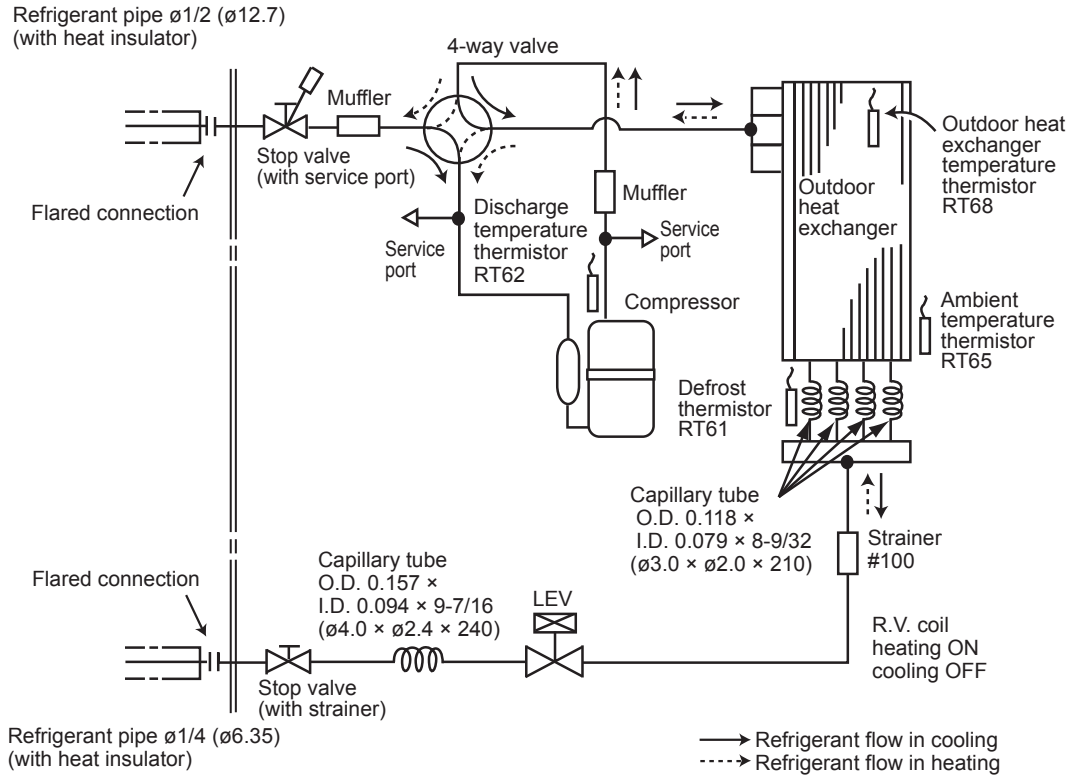

MUZ-HM24NA

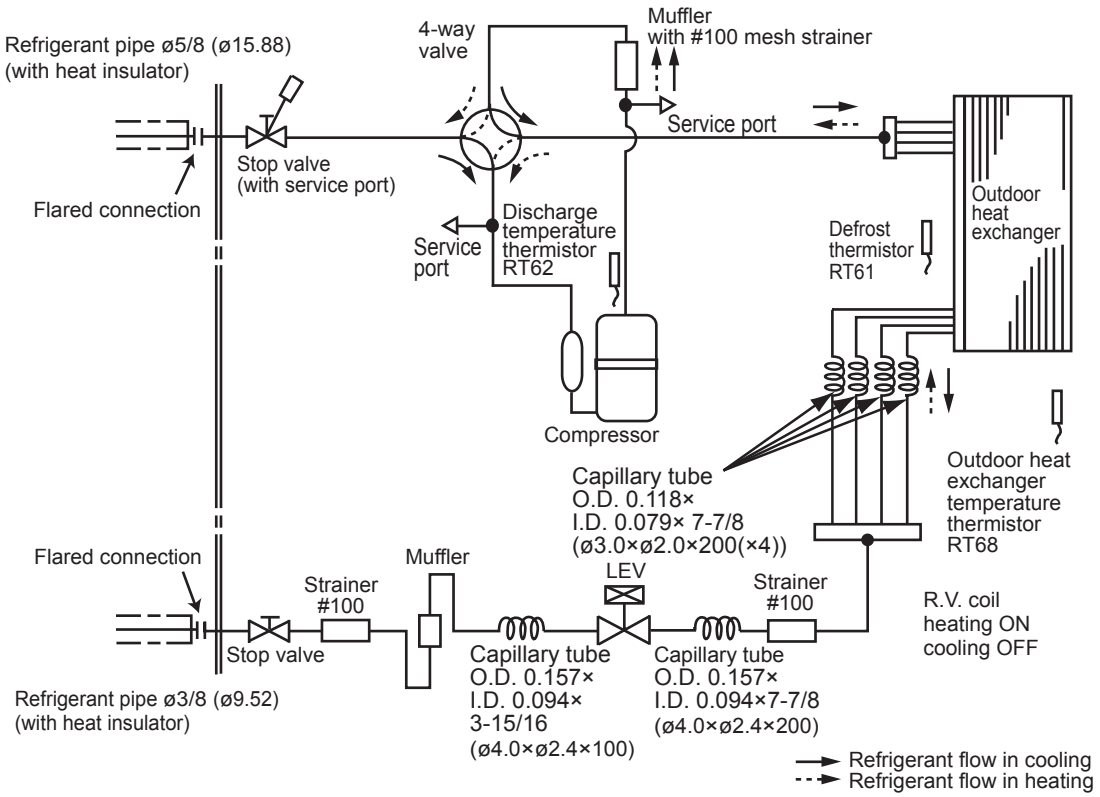

MUZ-FH06NA MUZ-FH06NAH MUZ-FH09NA MUZ-FH09NAH MUZ-FH12NA MUZ-FH12NAH

Unit: inch (mm)

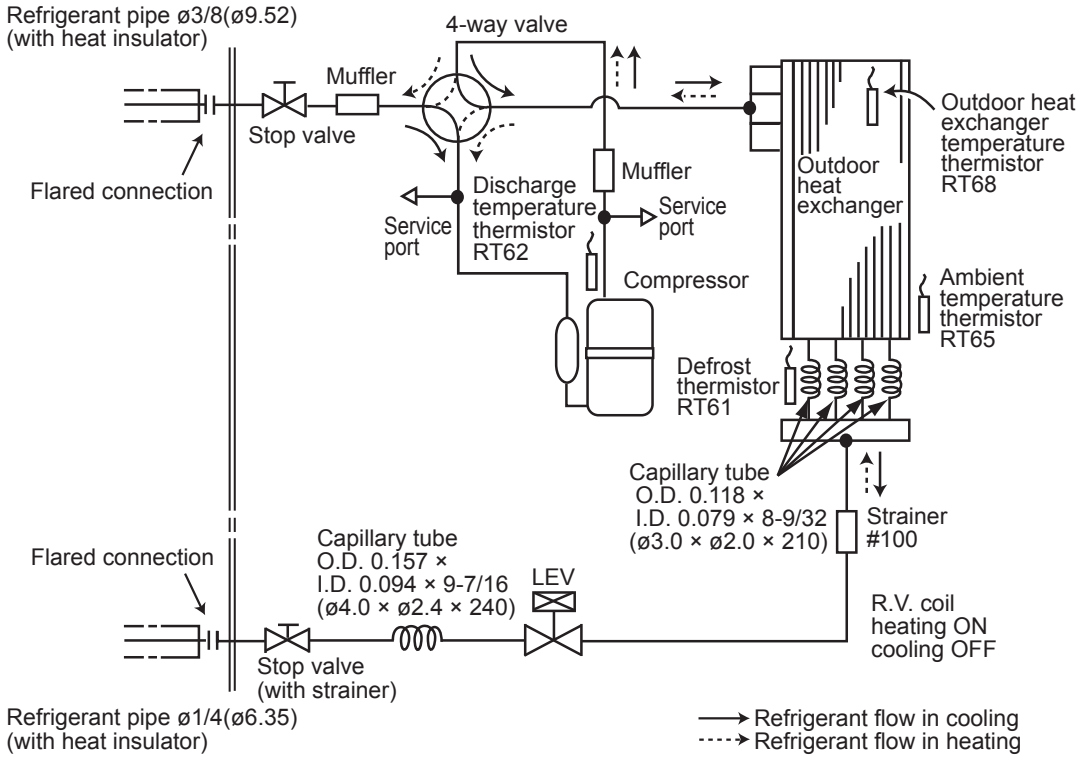

MUZ-FH15NA MUZ-FH15NAH MUZ-FH18NA2 MUZ-FH18NAH2

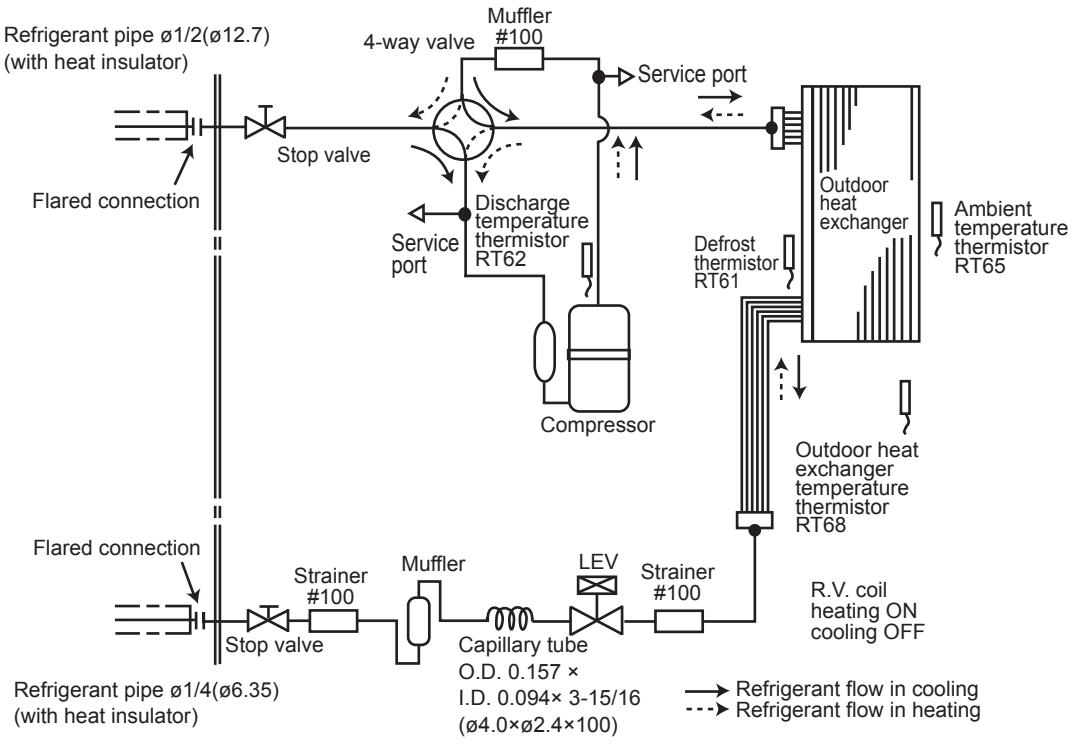

MUZ-FE09NAH MUZ-FE12NAH

Unit: inch (mm)

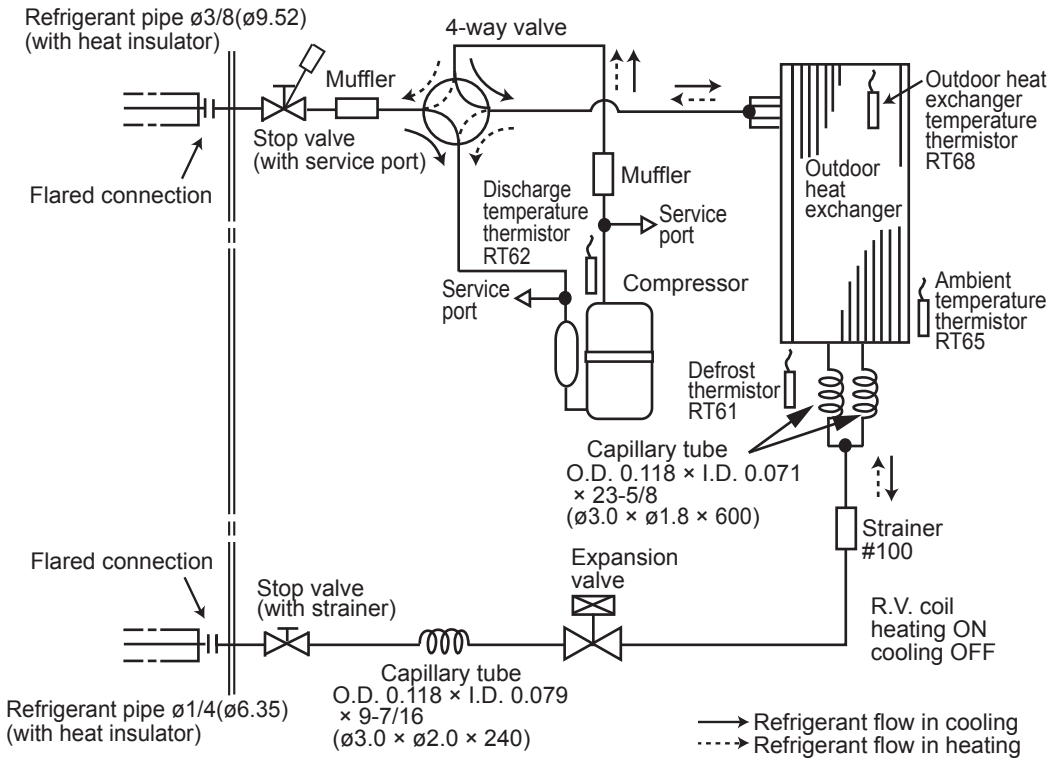

MUZ-D30NA MUZ-D36NA

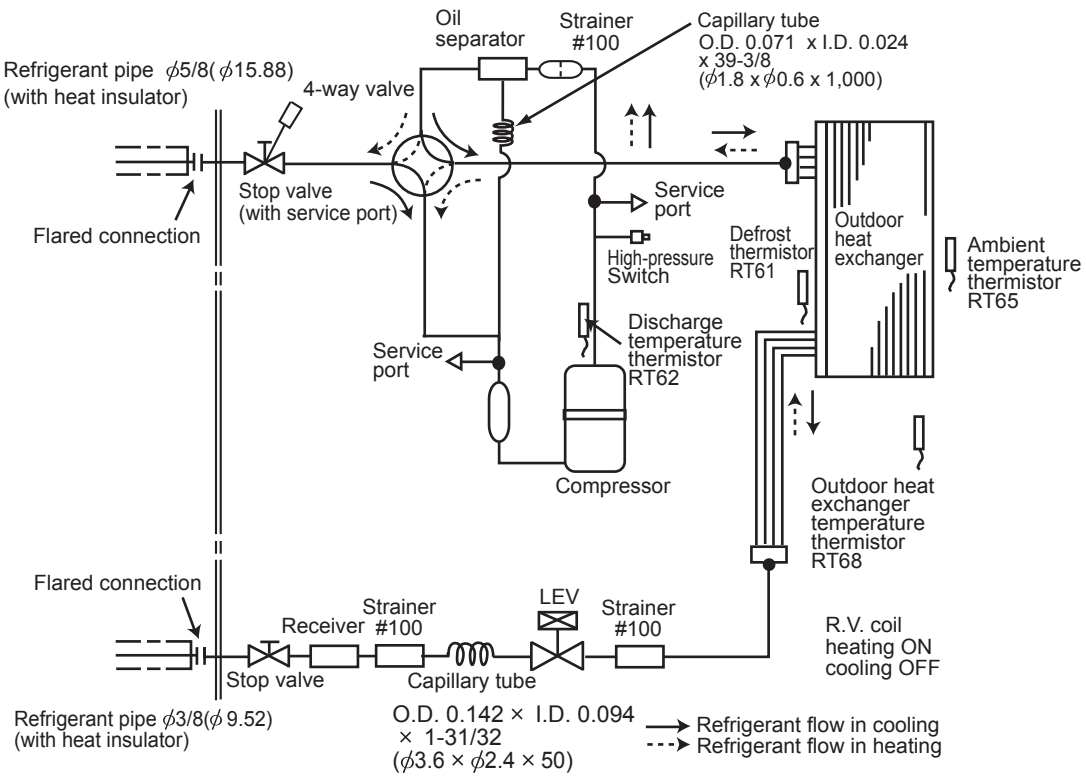

MUY-D30NA MUY-D36NA

Unit: inch (mm)

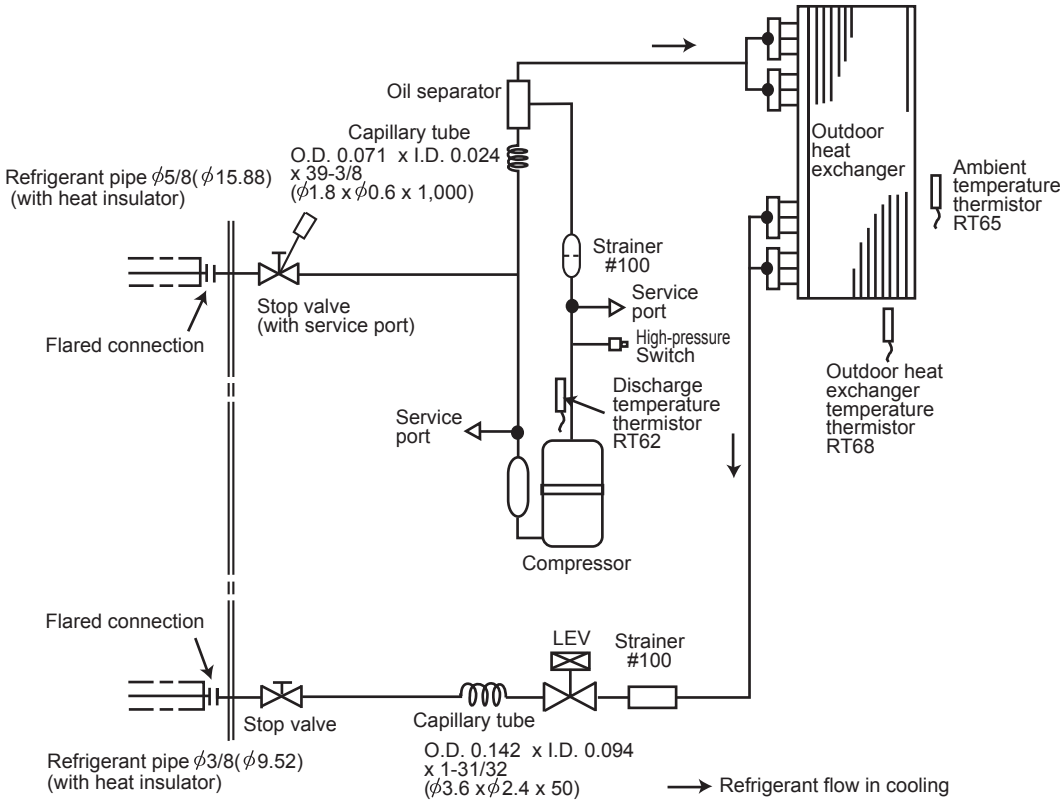

SUZ-KA09NA

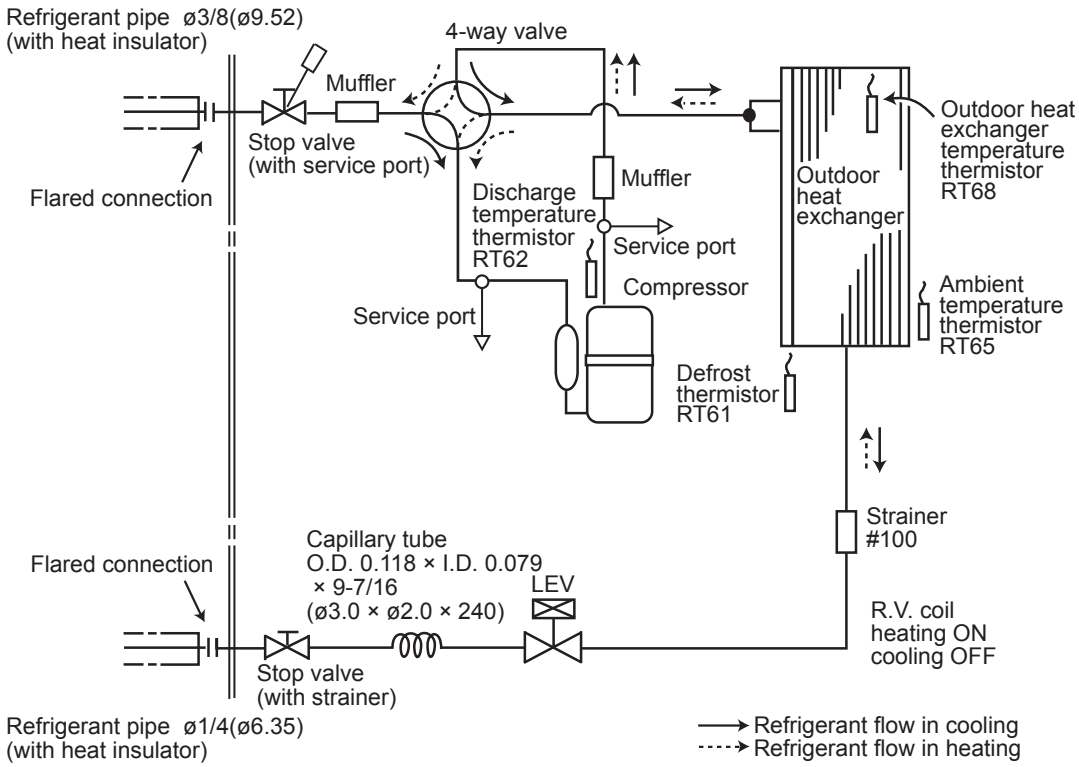

SUZ-KA12NA SUZ-KA15NA

Unit: inch (mm)

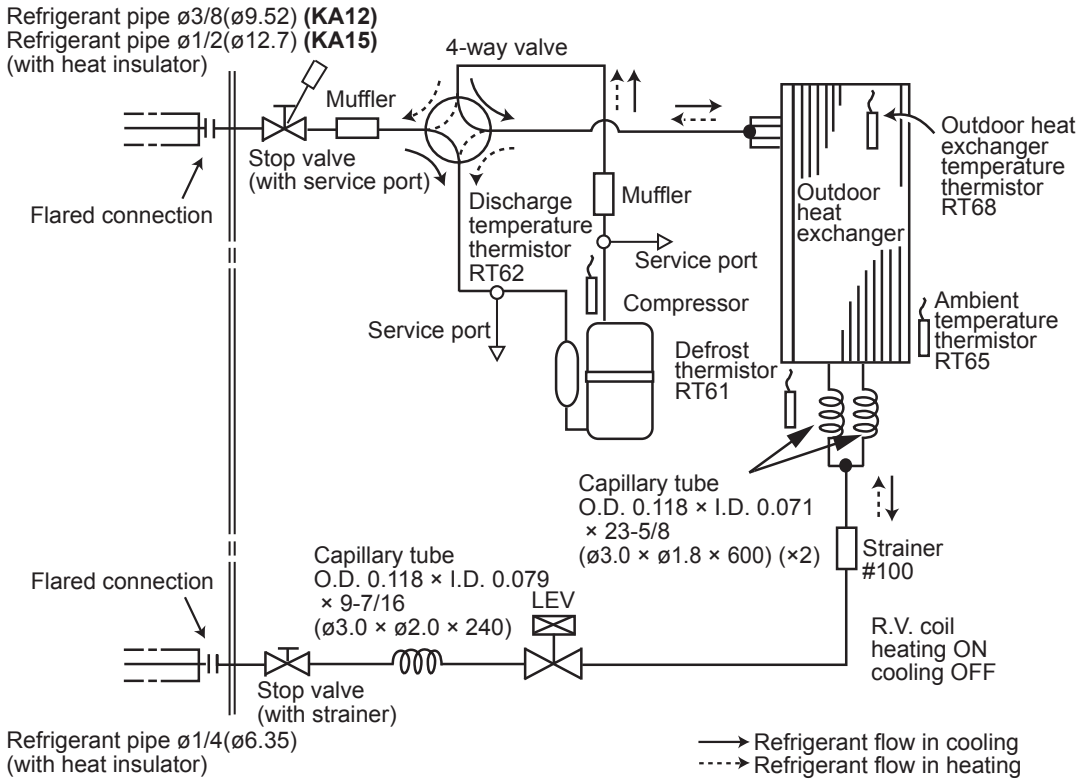

SUZ-KA18NA

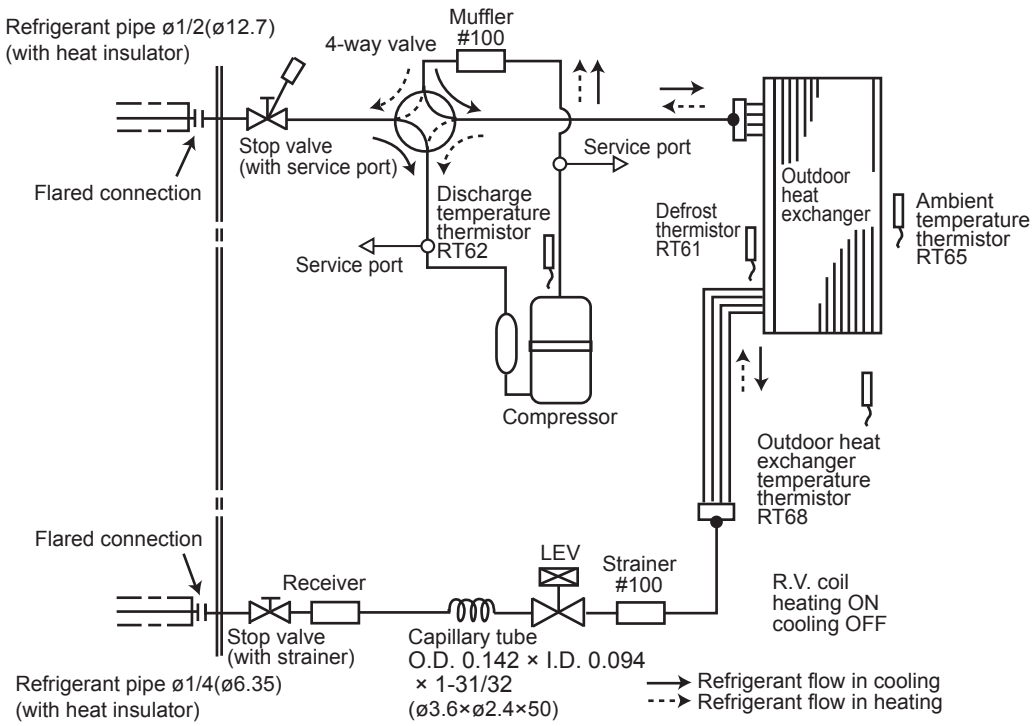

MUFZ-KJ09NAHZ MUFZ-KJ12NAHZ

Unit: inch (mm)

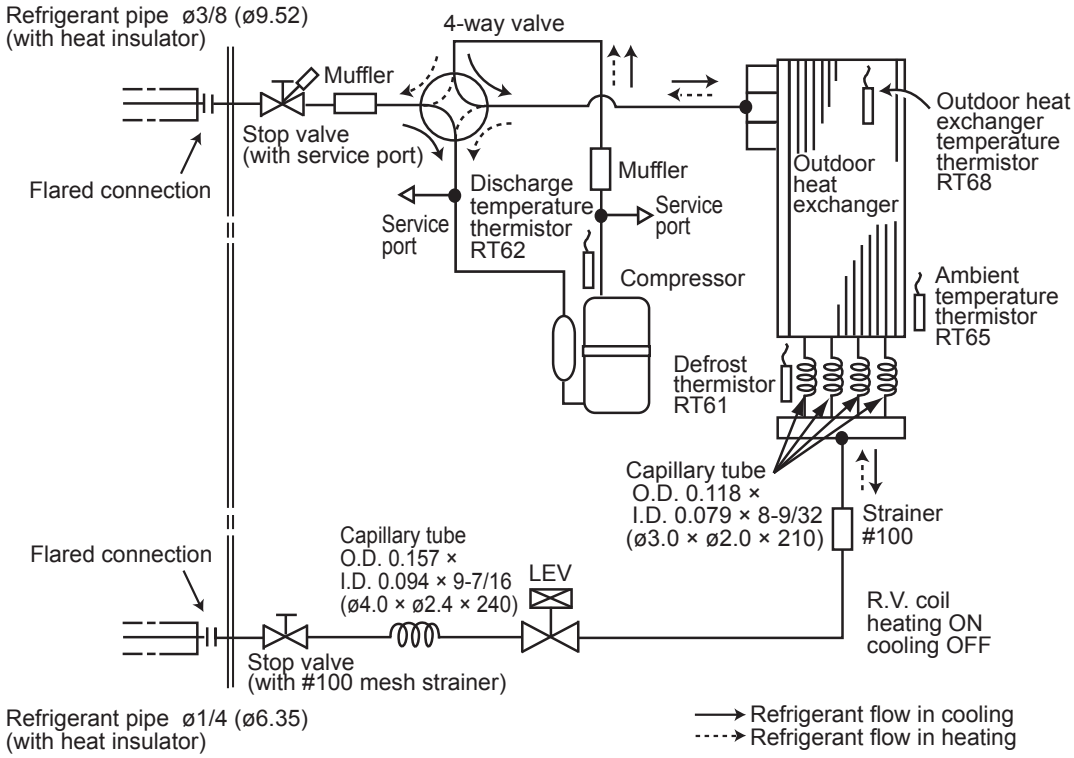

MUFZ-KJ15NAHZ MUFZ-KJ18NAHZ

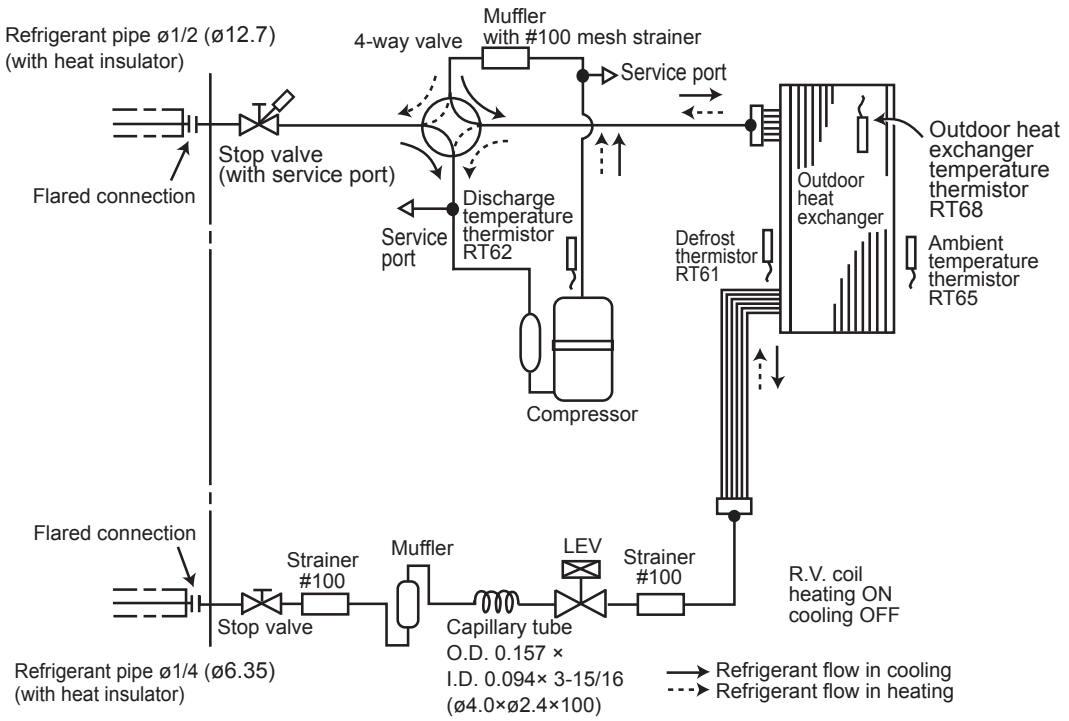

7 CORRECTION FACTORS

7-1. NON INVERTER TYPE

7-1.1 Cooling capacity corrections

Refrigerant piping length (one way: ft.)				
	25 (std.)	40	65	100
MU-A09WA **MU-A12WA**	1.0	0.988	0.967	-

7-1.2 Max. refrigerant piping length & max. Height difference

Model	Refrigerant piping: ft		Piping size: in.			
	Additional piping Max. length A	Additional piping Max. length B	Gas		Liquid	
			Outside diameter	Minimum Wall thickness	Outside diameter	Minimum Wall thickness
MU-A09WA	65	35	ϕ3/8	0.0315	ϕ1/4	0.0315
MU-A12WA			ϕ1/2			

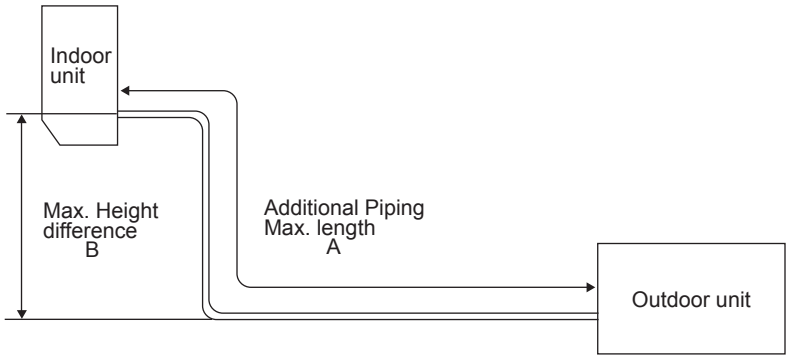

7-1.3 Additional refrigerant charge (R410A: oz.)

Model	Outdoor unit precharged	Refrigerant piping length (one way)								
		25ft	30ft	35ft	40ft	45ft	50ft	55ft	60ft	65ft
MU-A09WA	2lb. 5oz.	0	1.08	2.16	3.24	4.32	5.40	6.48	7.56	8.64
MU-A12WA	3lb. 1oz.									

NOTE: Calculation: X oz. = 1.08/5 oz./ft × (Refrigerant piping length (ft) - 25)

7-2. INVERTER TYPE

7-2.1 Cooling capacity corrections

Refrigerant piping length (one way: ft.)				
	25 (std.)	40	65	100
MUZ-GL09/12/15NA **MUZ-GL09/12/15NAH** **MUY-GL09/12/15NA**	1.0	0.988	0.967	-
MUZ-HM09/12/15NA2				
SUZ-KA09/12/15NA				
MUZ-GL18NA **MUZ-GL18NAH** **MUY-GL18NA**	1.0	0.985	0.963	0.933
MUZ-HM18NA2				
SUZ-KA18NA				
MUZ-GL24NA **MUZ-GL24NAH** **MUY-GL24NA**	1.0	0.983	0.956	0.921
MUZ-HM24NA2				
MUZ-D30NA **MUY-D30NA**	1.0	0.976	0.937	0.887
MUZ-D36NA **MUY-D36NA**	1.0	0.974	0.932	0.878

7-2.2 Heating capacity corrections

Refrigerant piping length (one way: ft.)				
	25 (std.)	40	65	100
MUZ-GL09/12/15NA **MUZ-GL09/12/15NAH** **MUY-GL09/12/15NA**	1.0	0.997	0.993	-
MUZ-HM09/12/15NA				
SUZ-KA09/12/15NA				
MUZ-GL18/24NA **MUZ-GL18/24NAH** **MUY-GL18/24NA**	1.0	0.997	0.993	0.987
MUZ-HM18/24NA				
SUZ-KA18NA				
MUZ-D30/36NA **MUY-D30/36NA**				

7-2.3 Max. refrigerant piping length & max. Height difference

Model	Refrigerant piping: ft.		Piping size O.D: in.	
	Max. Length A	Max. Height difference B	Gas	Liquid
MUZ-GL09/12NA **MUZ-GL09/12NAH** **MUY-GL09/12NA**	65	40	3/8	1/4
MUZ-HM09/12NA				
MUZ-GL15NA **MUZ-GL15NAH** **MUY-GL15NA**	65	40	1/2	1/4
MUZ-HM15/18NA				
MUZ-GL18NA **MUZ-GL18NAH** **MUY-GL18NA**	100	50	1/2	1/4
MUZ-GL24NA **MUZ-GL24NAH** **MUY-GL24NA**	100	50	5/8	3/8
MUZ-HM24NA				
MUZ-D30NA **MUZ-D36NA** **MUY-D30NA** **MUY-D36NA**	100	50	5/8	3/8
SUZ-KA09NA **SUZ-KA12NA**	65	40	3/8	1/4
SUZ-KA15NA			1/2	
SUZ-KA18NA	100	50		

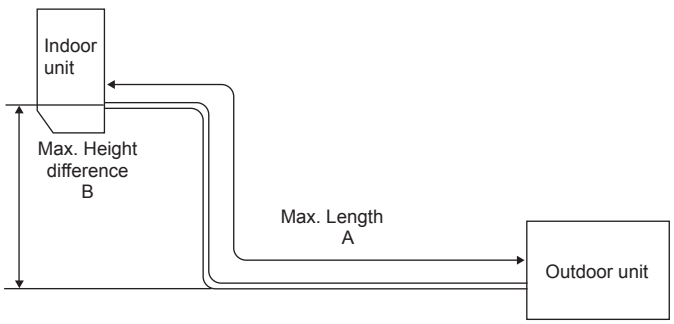

7-2.4 Additional refrigerant charge (R410A: oz.)

NOTE: Refrigerant piping exceeding 25 ft. requires additional refrigerant charge according to the calculation.

Model	Outdoor unit precharged	Refrigerant piping length (one way): ft.					
		25	30	40	50	60	65
MUZ-HM09NA **MUZ-HM12NA** - U1	1 lb. 12 oz.	0	1.08	3.24	5.40	7.56	8.64
MUZ-GL09NA - U1 **MUZ-GL09NAH** - U1	2 lb. 5 oz.						
MUZ-GL09NA - U8 **MUZ-GL09NAH** - U8 **MUY-GL09NA** **MUZ-GL12NA** **MUZ-GL12NAH** **MUY-GL12NA**	2 lb. 9 oz.						
MUZ-HM12NA - U8							
MUZ-GL15NA **MUZ-GL15NAH**							
MUZ-HM15NA2							
MUY-GL15NA							
MUZ-HM18NA2	2 lb. 10 oz.						

Calculation: X oz. = 1.08/5 oz./ft. × (Refrigerant piping length (ft.) - 25)

NOTE: Refrigerant piping exceeding 25 ft. requires additional refrigerant charge according to the calculation.

Model	Outdoor unit precharged	Refrigerant piping length (one way): ft.					
		25	30	40	50	60	65
SUZ-KA09NA	1 lb. 16 oz.	0	1.62	4.86	8.10	11.34	12.96
SUZ-KA12NA **SUZ-KA15NA**	2 lb. 9 oz.						

Calculation: X oz. = 1.62/5 oz./ft. × (Refrigerant piping length (ft.) - 25)

NOTE: Refrigerant piping exceeding 25 ft. requires additional refrigerant charge according to the calculation.

Model	Outdoor unit precharged	Refrigerant piping length (one way): ft.								
		25	30	40	50	60	70	80	90	100
MUZ-GL18NA **MUZ-GL18NAH** **MUY-GL18NA**	3 lb. 9 oz.	0	1.08	3.24	5.40	7.56	9.72	11.88	14.04	16.20
MUZ-HM24NA										
MUY-D30NA **MUY-D36NA**	4 lb.									
SUZ-KA18NA	3 lb. 16 oz.									

Calculation: X oz. = 1.08/5 oz./ft. × (Refrigerant piping length (ft.) - 25)

NOTE: Refrigerant piping exceeding 33 ft. requires additional refrigerant charge according to the calculation.

Model	Outdoor unit precharged	Refrigerant piping length (one way): ft.							
		33	40	50	60	70	80	90	100
MUZ-GL24NA **MUZ-GL24NAH** **MUY-GL24NA**	4 lb. 3 oz.	0	4.14	10.06	15.98	21.90	27.82	33.74	39.66

Calculation: X oz. = 2.96/5 oz. / ft. × (Refrigerant piping length (ft.) - 33)

NOTE: Refrigerant piping exceeding 25 ft. requires additional refrigerant charge according to the calculation.

Model	Outdoor unit precharged	Refrigerant piping length (one way): ft.								
		25	30	40	50	60	70	80	90	100
MUZ-D30NA **MUZ-D36NA**	4 lb. 10 oz.	0	2.96	8.88	14.80	20.72	26.64	32.56	38.48	44.40

Calculation: X oz. = 2.96/5 oz./ft. × (Refrigerant piping length (ft.) - 25)

7-3. HYPER HEATING INVERTER

7-3.1 Cooling capacity corrections

Refrigerant piping length (one way: ft.)				
	25 (std.)	40	65	100
MUZ-FH06/09/12NA **MUZ-FH06/09/12NAH**	1.0	0.988	0.967	-
MUFZ-KJ09/12NAHZ				
MUZ-FE09/12NAH				
MUZ-FH15NA **MUZ-FH15NAH** **MUZ-FH18NA2** **MUZ-FH18NAH2**	1.0	0.985	0.963	0.933
MUFZ-KJ15/18NAHZ				

7-3.2 Heating capacity corrections

Refrigerant piping length (one way: ft.)				
	25 (std.)	40	65	100
MUZ-FH06/09/12NA **MUZ-FH06/09/12NAH**	1.0	0.977	0.993	-
MUFZ-KJ09/12NAHZ				
MUZ-FE09/12NAH				
MUZ-FH15NA **MUZ-FH15NAH** **MUZ-FH18NA2** **MUZ-FH18NAH2**	1.0	0.977	0.993	0.987
MUFZ-KJ15/18NAHZ				

7-3.3 Max. refrigerant piping length and max. height difference

Model	Refrigerant piping: ft.		Piping size O.D: in.	
	Max. Length A	Max. Height difference B	Gas	Liquid
MUZ-FH06/09/12NA **MUZ-FH06/09/12NAH**	65	40	3/8	1/4
MUFZ-KJ09NAHZ **MUFZ-KJ12NAHZ**				
MUZ-FH15NA **MUZ-FH15NAH** **MUZ-FH18NA2** **MUZ-FH18NAH2**	100	50	1/2	1/4
MUFZ-KJ15NAHZ **MUFZ-KJ18NAHZ**				

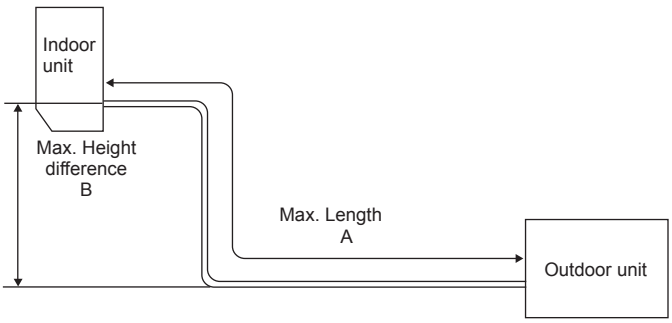

7-3.4 Additional refrigerant charge (R410A: oz.)

NOTE: Refrigerant piping exceeding 25 ft. requires additional refrigerant charge according to the calculation.

Model	Outdoor unit precharged	Refrigerant piping length (one way): ft.					
		25	30	40	50	60	65
MUZ-FH06NA **MUZ-FH06NAH** **MUZ-FH09NA** **MUZ-FH09NAH**	2 lb. 9 oz.	0	1.08	3.24	5.40	7.56	8.64

Calculation: X oz. = 1.08/5 oz./ft. × (Refrigerant piping length (ft.) - 25)

NOTE: Refrigerant piping exceeding 25 ft. requires additional refrigerant charge according to the calculation.

Model	Outdoor unit precharged	Refrigerant piping length (one way): ft.					
		25	30	40	50	60	65
MUZ-FH12NA **MUZ-FH12NAH**	2 lb. 9 oz.	0	1.62	4.86	8.10	11.34	12.96
MUZ-FE09NAH **MUZ-FE12NAH**							

Calculation: X oz. = 1.62/5 oz./ft. × (Refrigerant piping length (ft.) - 25)

NOTE: Refrigerant piping exceeding 25 ft. requires additional refrigerant charge according to the calculation.

Model	Outdoor unit precharged	Refrigerant piping length (one way): ft.								
		25	30	40	50	60	70	80	90	100
MUZ-FH15NA **MUZ-FH15NAH** **MUZ-FH18NA2** **MUZ-FH18NAH2**	3 lb. 7 oz.	0	1.08	3.24	5.40	7.56	9.72	11.88	14.04	16.20

Calculation: X oz. = 1.08/5 oz./ft. × (Refrigerant piping length (ft.) - 25)

NOTE: Refrigerant piping exceeding 25 ft. requires additional refrigerant charge according to the calculation.

Model	Outdoor unit precharged	Refrigerant piping length (one way): ft.					
		25	30	40	50	60	65
MUFZ-KJ09NAHZ **MUFZ-KJ12NAHZ**	2 lb. 10 oz.	0	1.08	3.24	5.40	7.56	8.64

Calculation: X oz. = 1.08/5 oz./ft. × (Refrigerant piping length (ft.) - 25)

NOTE: Refrigerant piping exceeding 25 ft. requires additional refrigerant charge according to the calculation.

Model	Outdoor unit precharged	Refrigerant piping length (one way): ft.								
		25	30	40	50	60	70	80	90	100
MUFZ-KJ15NAHZ **MUFZ-KJ18NAHZ**	3 lb. 5 oz.	0	1.62	4.86	8.10	11.34	14.58	17.82	21.06	24.30

Calculation: X oz. = 1.62/5 oz./ft. × (Refrigerant piping length (ft.) - 25)

8-1. PERFORMANCE DATA

MU-A09WA MU-A12WA

1) COOLING CAPACITY

Model	Indoor air IWB (°F)	Outdoor intake air DB temperature (°F)														
		75			85			95			105			115		
		TC	SHC	TPC	TC	SHC	TPC	TC	SHC	TPC	TC	SHC	TPC	TC	SHC	TPC
MU-A09WA	71	11.6	6.4	0.77	10.9	5.9	0.85	10.2	5.6	0.91	9.5	5.2	0.96	8.7	4.8	1.00
	67	11.0	7.5	0.73	10.3	7.0	0.80	9.5	6.5	0.87	8.8	6.0	0.92	8.1	5.5	0.97
	63	10.4	8.4	0.70	9.6	7.8	0.77	8.9	7.3	0.83	8.1	6.6	0.89	7.4	6.0	0.92
MU-A12WA	71	14.7	8.3	0.95	13.7	7.8	1.04	12.9	7.3	1.12	12.0	6.8	1.18	11.0	6.3	1.23
	67	13.9	9.7	0.90	13.0	9.1	0.99	12.0	8.4	1.07	11.2	7.8	1.13	10.3	7.2	1.19
	63	13.1	10.9	0.86	12.1	10.1	0.95	11.3	9.4	1.02	10.3	8.6	1.09	9.4	7.8	1.13

Notes 1. IWB: Intake air wet-bulb temperature.
TC: Total Capacity ($x10^3$ Btu/h)
SHC: Sensible Heat Capacity ($x10^3$ Btu/h)
TPC: Total Power Consumption (kW)
2. SHC is based on 80°F of indoor intake air DB temperature.

MUZ-GL09NA MUZ-GL09NAH MUY-GL09NA
MUZ-GL12NA MUZ-GL12NAH MUY-GL12NA
MUZ-GL15NA MUZ-GL15NAH MUY-GL15NA
MUZ-GL18NA MUZ-GL18NAH MUY-GL18NA
MUZ-GL24NA MUZ-GL24NAH MUY-GL24NA

1) COOLING CAPACITY

Model	Indoor air	Outdoor intake air DB temperature (˚F)														
	IWB (˚F)	75			85			95			105			115		
		TC	SHC	TPC	TC	SHC	TPC	TC	SHC	TPC	TC	SHC	TPC	TC	SHC	TPC
MUZ-GL09NA MUZ-GL09NAH MUY-GL09NA	71	11.0	7.6	0.52	10.3	7.1	0.57	9.7	6.6	0.61	9.0	6.2	0.65	8.3	5.7	0.67
	67	10.4	8.6	0.49	9.7	8.0	0.54	9.0	7.4	0.59	8.4	6.9	0.62	7.7	6.3	0.65
	63	9.8	9.4	0.47	9.1	8.7	0.52	8.5	8.1	0.56	7.7	7.3	0.60	7.0	6.7	0.62
MUZ-GL12NA MUZ-GL12NAH MUY-GL12NA	71	14.7	9.4	0.82	13.7	8.7	0.90	12.9	8.2	0.97	12.0	7.6	1.02	11.0	7.0	1.06
	67	13.9	10.7	0.77	13.0	10.0	0.85	12.0	9.2	0.92	11.2	8.6	0.98	10.3	7.9	1.02
	63	13.1	11.8	0.74	12.1	10.9	0.81	11.3	10.2	0.88	10.3	9.3	0.94	9.4	8.5	0.98
MUZ-GL15NA MUZ-GL15NAH MUY-GL15NA	71	17.2	9.7	0.96	16.0	9.1	1.05	15.1	8.5	1.13	14.0	7.9	1.19	12.9	7.3	1.24
	67	16.2	11.4	0.91	15.1	10.6	1.00	14.0	9.8	1.08	13.0	9.1	1.14	12.0	8.4	1.20
	63	15.3	12.7	0.86	14.1	11.8	0.96	13.2	11.0	1.03	12.0	10.0	1.10	10.9	9.1	1.14
MUZ-GL18NA MUZ-GL18NAH MUY-GL18NA	71	22.1	16.2	1.19	20.6	15.2	1.31	19.4	14.3	1.41	18.0	13.3	1.48	16.6	12.2	1.54
	67	20.9	18.2	1.13	19.4	16.9	1.24	18.0	15.7	1.34	16.7	14.6	1.42	15.4	13.4	1.49
	63	19.6	19.7	1.07	18.2	18.2	1.19	16.9	17.0	1.28	15.4	15.4	1.37	14.0	14.1	1.42
MUZ-GL24NA MUZ-GL24NAH MUY-GL24NA	71	27.6	17.0	1.60	25.8	15.9	1.76	24.2	14.9	1.89	22.5	13.9	1.99	20.7	12.8	2.07
	67	26.1	19.6	1.51	24.3	18.2	1.67	22.5	16.9	1.80	20.9	15.7	1.91	19.2	14.4	2.00
	63	24.5	21.7	1.44	22.7	20.1	1.59	21.2	18.7	1.72	19.2	17.0	1.84	17.6	15.5	1.91

NOTE: 1. IWB : Intake air wet-bulb temperature TC : Total Capacity ($x10^3$ Btu/h)
SHC : Sensible Heat Capacity ($x10^3$ Btu/h) TPC : Total Power Consumption (kW)
2. SHC is based on 80˚F of indoor Intake air DB temperature.

2) HEATING CAPACITY (MUZ)

Model	Indoor air IDB (˚F)	Outdoor intake air WB temperature (˚F)													
		5		15		25		35		43		45		55	
		TC	TPC	TC	TPC	TC	TPC	TC	TPC	TC	TPC	TC	TPC	TC	TPC
MUZ-GL09NA	75	4.8	0.42	6.3	0.54	7.9	0.63	9.4	0.70	10.6	0.74	11.0	0.75	12.4	0.78
	70	5.2	0.41	6.7	0.52	8.2	0.62	9.6	0.68	10.9	0.72	11.2	0.73	12.7	0.76
	65	5.5	0.39	6.9	0.50	8.6	0.59	10.0	0.67	11.2	0.70	11.6	0.71	13.0	0.75
MUZ-GL12NA	75	6.3	0.65	8.4	0.82	10.4	0.96	12.5	1.07	14.0	1.13	14.5	1.14	16.4	1.19
	70	6.8	0.62	8.9	0.79	10.8	0.94	12.7	1.05	14.4	1.10	14.8	1.12	16.8	1.17
	65	7.2	0.59	9.1	0.76	11.3	0.91	13.2	1.02	14.8	1.07	15.3	1.09	17.1	1.14
MUZ-GL09NAH	75	4.8	0.55	6.3	0.67	7.9	0.76	9.4	0.70	10.6	0.74	11.0	0.75	12.4	0.78
	70	5.2	0.54	6.7	0.65	8.2	0.75	9.6	0.68	10.9	0.72	11.2	0.73	12.7	0.76
	65	5.5	0.52	6.9	0.63	8.6	0.72	10.0	0.67	11.2	0.70	11.6	0.71	13.0	0.75
MUZ-GL12NAH	75	6.3	0.78	8.4	0.95	10.4	1.09	12.5	1.07	14.0	1.13	14.5	1.14	16.4	1.19
	70	6.8	0.75	8.9	0.92	10.8	1.07	12.7	1.05	14.4	1.10	14.8	1.12	16.8	1.17
	65	7.2	0.72	9.1	0.89	11.3	1.04	13.2	1.02	14.8	1.07	15.3	1.09	17.1	1.14
MUZ-GL15NA	75	7.9	0.94	10.4	1.19	13.1	1.40	15.6	1.56	17.6	1.64	18.1	1.66	20.5	1.73
	70	8.6	0.90	11.1	1.15	13.5	1.37	15.9	1.52	18.0	1.60	18.5	1.63	21.0	1.70
	65	9.0	0.86	11.3	1.10	14.1	1.32	16.5	1.48	18.5	1.56	19.1	1.58	21.4	1.66
MUZ-GL15NAH	75	7.9	1.07	10.4	1.32	13.1	1.53	15.6	1.56	17.6	1.64	18.1	1.66	20.5	1.73
	70	8.6	1.03	11.1	1.28	13.5	1.50	15.9	1.52	18.0	1.60	18.5	1.63	21.0	1.70
	65	9.0	0.99	11.3	1.23	14.1	1.45	16.5	1.48	18.5	1.56	19.1	1.58	21.4	1.66
MUZ-GL18NA	75	9.5	0.99	12.5	1.25	15.7	1.47	18.7	1.64	21.1	1.72	21.7	1.75	24.6	1.81
	70	10.3	0.95	13.3	1.21	16.2	1.44	19.1	1.60	21.6	1.68	22.2	1.71	25.2	1.78
	65	10.8	0.91	13.6	1.16	17.0	1.39	19.8	1.55	22.2	1.64	22.9	1.66	25.7	1.75
MUZ-GL18NAH	75	9.5	1.12	12.5	1.38	15.7	1.60	18.7	1.64	21.1	1.72	21.7	1.75	24.6	1.81
	70	10.3	1.08	13.3	1.34	16.2	1.57	19.1	1.60	21.6	1.68	22.2	1.71	25.2	1.78
	65	10.8	1.04	13.6	1.29	17.0	1.52	19.8	1.55	22.2	1.64	22.9	1.66	25.7	1.75
MUZ-GL24NA	75	12.1	1.38	16.0	1.74	20.0	2.05	23.9	2.28	26.9	2.40	27.7	2.43	31.5	2.53
	70	13.1	1.32	17.0	1.68	20.7	2.00	24.4	2.22	27.6	2.34	28.4	2.39	32.2	2.48
	65	13.8	1.26	17.4	1.61	21.7	1.93	25.3	2.16	28.4	2.28	29.3	2.32	32.8	2.43
MUZ-GL24NAH	75	12.1	1.38	16.0	1.74	20.0	2.05	23.9	2.28	26.9	2.40	27.7	2.43	31.5	2.53
	70	13.1	1.32	17.0	1.68	20.7	2.00	24.4	2.22	27.6	2.34	28.4	2.39	32.2	2.48
	65	13.8	1.26	17.4	1.61	21.7	1.93	25.3	2.16	28.4	2.28	29.3	2.32	32.8	2.43

NOTE: 1. IDB : Intake air dry-bulb temperature
TC : Total Capacity (x10^3 Btu/h) TPC : Total Power Consumption (kW)
2. Above data is for heating operation without any frost.

How to operate with fixed operational frequency of the compressor.

1. Press the EMERGENCY OPERATION switch on the front of the indoor unit, and select either EMERGENCY COOL mode or EMERGENCY HEAT mode before starting to operate the air conditioner.
2. The compressor starts with operational frequency.
3. The fan speed of the indoor unit is High.
4. This operation continues for 30 minutes.
5. In order to release this operation, press the EMERGENCY OPERATION switch or press any button on the remote controller.

MUZ-HM09NA MUZ-HM12NA MUZ-HM15NA MUZ-HM18NA MUZ-HM24NA

1) COOLING CAPACITY

Model	Indoor air	Outdoor intake air DB temperature (˚F)														
	IWB (˚F)	75			85			95			105			115		
		TC	SHC	TPC	TC	SHC	TPC	TC	SHC	TPC	TC	SHC	TPC	TC	SHC	TPC
MUZ-HM09NA	71	11.0	7.6	0.67	10.3	7.1	0.73	9.7	6.6	0.79	9.0	6.2	0.83	8.3	5.7	0.86
	67	10.4	8.6	0.63	9.7	8.0	0.69	9.0	7.4	0.75	8.4	6.9	0.80	7.7	6.3	0.83
	63	9.8	9.4	0.60	9.1	8.7	0.66	8.5	8.1	0.72	7.7	7.3	0.77	7.0	6.7	0.80
MUZ-HM12NA	71	14.7	9.4	1.08	13.7	8.7	1.18	12.9	8.2	1.27	12.0	7.6	1.34	11.0	7.0	1.39
	67	13.9	10.7	1.02	13.0	10.0	1.12	12.0	9.2	1.21	11.2	8.6	1.28	10.3	7.9	1.34
	63	13.1	11.8	0.97	12.1	10.9	1.07	11.3	10.2	1.16	10.3	9.3	1.23	9.4	8.5	1.28
MUZ-HM15NA	71	17.2	11.1	1.04	16.0	10.4	1.14	15.1	9.7	1.23	14.0	9.1	1.29	12.9	8.3	1.35
	67	16.2	12.7	0.98	15.1	11.8	1.08	14.0	10.9	1.17	13.0	10.2	1.24	12.0	9.3	1.30
	63	15.3	13.9	0.94	14.1	12.9	1.04	13.2	12.0	1.12	12.0	10.9	1.19	10.9	10.0	1.24
MUZ-HM18NA	71	21.1	15.3	1.46	19.7	14.3	1.60	18.5	13.4	1.72	17.2	12.5	1.81	15.8	11.5	1.89
	67	20.0	17.2	1.38	18.6	16.0	1.52	17.2	14.8	1.64	16.0	13.8	1.74	14.7	12.6	1.82
	63	18.7	18.6	1.31	17.4	17.3	1.45	16.2	16.1	1.57	14.7	14.6	1.67	13.4	13.3	1.74
MUZ-HM24NA	71	27.6	20.9	2.34	25.8	19.5	2.56	24.2	18.3	2.76	22.5	17.0	2.91	20.7	15.7	3.02
	67	26.1	23.2	2.21	24.3	21.6	2.43	22.5	20.0	2.63	20.9	18.6	2.79	19.2	17.1	2.92
	63	24.5	25.1	2.10	22.7	23.3	2.33	21.2	21.6	2.51	19.2	19.7	2.68	17.6	18.0	2.79

NOTE: 1. IWB : Intake air wet-bulb temperature TC : Total Capacity ($x10^3$ Btu/h)
SHC : Sensible Heat Capacity ($x10^3$ Btu/h) TPC : Total Power Consumption (kW)
2. SHC is based on 80˚F of indoor Intake air DB temperature.

2) HEATING CAPACITY

Model	Indoor air	Outdoor intake air WB temperature (˚F)													
	IDB (˚F)	5		15		25		35		43		45		55	
		TC	TPC	TC	TPC	TC	TPC	TC	TPC	TC	TPC	TC	TPC	TC	TPC
MUZ-HM09NA	75	4.8	0.53	6.3	0.67	7.9	0.79	9.4	0.88	10.6	0.92	11.0	0.94	12.4	0.97
	70	5.2	0.51	6.7	0.65	8.2	0.77	9.6	0.86	10.9	0.90	11.2	0.92	12.7	0.95
	65	5.5	0.49	6.9	0.62	8.6	0.74	10.0	0.83	11.2	0.88	11.6	0.89	13.0	0.94
MUZ-HM12NA	75	5.4	0.58	7.1	0.74	8.8	0.87	10.6	0.97	11.9	1.01	12.3	1.03	13.9	1.07
	70	5.8	0.56	7.5	0.71	9.2	0.85	10.8	0.94	12.2	0.99	12.6	1.01	14.2	1.05
	65	6.1	0.53	7.7	0.68	9.6	0.82	11.2	0.92	12.6	0.97	12.9	0.98	14.5	1.03
MUZ-HM15NA	75	7.9	0.94	10.4	1.19	13.1	1.40	15.6	1.56	17.6	1.64	18.1	1.66	20.5	1.73
	70	8.6	0.90	11.1	1.15	13.5	1.37	15.9	1.52	18.0	1.60	18.5	1.63	21.0	1.70
	65	9.0	0.86	11.3	1.10	14.1	1.32	16.5	1.48	18.5	1.56	19.1	1.58	21.4	1.66
MUZ-HM18NA	75	7.9	0.94	10.4	1.18	13.1	1.39	15.6	1.55	17.6	1.63	18.1	1.65	20.5	1.72
	70	8.6	0.90	11.1	1.14	13.5	1.36	15.9	1.51	18.0	1.59	18.5	1.62	21.0	1.69
	65	9.0	0.86	11.3	1.10	14.1	1.31	16.5	1.47	18.5	1.55	19.1	1.57	21.4	1.65
MUZ-HM24NA	75	11.4	1.48	15.1	1.86	18.9	2.19	22.5	2.44	25.4	2.56	26.1	2.60	29.6	2.70
	70	12.4	1.41	16.0	1.80	19.5	2.14	23.0	2.38	26.0	2.50	26.8	2.55	30.3	2.65
	65	13.0	1.35	16.4	1.73	20.4	2.06	23.8	2.31	26.8	2.44	27.6	2.48	30.9	2.60

NOTE: 1. IDB : Intake air dry-bulb temperature
TC : Total Capacity (x10^3 Btu/h) TPC : Total Power Consumption (kW)
2. Above data is for heating operation without any frost.

How to operate with fixed operational frequency of the compressor.

1. Press the EMERGENCY OPERATION switch on the front of the indoor unit, and select either EMERGENCY COOL mode or EMERGENCY HEAT mode before starting to operate the air conditioner.
2. The compressor starts with operational frequency.
3. The fan speed of the indoor unit is High.
4. This operation continues for 30 minutes.
5. In order to release this operation, press the EMERGENCY OPERATION switch or press any button on the remote controller.

MUZ-FH06NA MUZ-FH06NAH MUZ-FH09NA MUZ-FH09NAH MUZ-FH12NA MUZ-FH12NAH MUZ-FH15NA MUZ-FH15NAH MUZ-FH18NA2 MUZ-FH18NAH2

1) COOLING CAPACITY

Model	Indoor air	Outdoor intake air DB temperature (˚F)														
	IWB (˚F)	75			85			95			105			115		
		TC	SHC	TPC	TC	SHC	TPC	TC	SHC	TPC	TC	SHC	TPC	TC	SHC	TPC
MUZ-FH06NA MUZ-FH06NAH	71	7.4	6.1	0.28	6.9	5.7	0.31	6.5	5.3	0.33	6.0	5.0	0.35	5.5	4.6	0.36
	67	7.0	6.7	0.26	6.5	6.2	0.29	6.0	5.8	0.32	5.6	5.4	0.33	5.1	4.9	0.35
	63	6.5	7.2	0.25	6.1	6.6	0.28	5.6	6.2	0.30	5.1	5.6	0.32	4.7	5.1	0.33
MUZ-FH09NA MUZ-FH09NAH	71	11.0	8.7	0.50	10.3	8.1	0.55	9.7	7.6	0.59	9.0	7.1	0.62	8.3	6.5	0.64
	67	10.4	9.6	0.47	9.7	8.9	0.52	9.0	8.3	0.56	8.4	7.7	0.59	7.7	7.1	0.62
	63	9.8	10.3	0.45	9.1	9.6	0.50	8.5	8.9	0.53	7.7	8.1	0.57	7.0	7.4	0.59
MUZ-FH12NA MUZ-FH12NAH	71	14.7	10.2	0.77	13.7	9.6	0.85	12.9	9.0	0.91	12.0	8.4	0.96	11.0	7.7	1.00
	67	13.9	11.6	0.73	13.0	10.8	0.80	12.0	10.0	0.87	11.2	9.3	0.92	10.3	8.5	0.97
	63	13.1	12.6	0.70	12.1	11.7	0.77	11.3	10.9	0.83	10.3	9.9	0.89	9.4	9.0	0.92
MUZ-FH15NA MUZ-FH15NAH	71	18.4	10.4	1.07	17.2	9.7	1.17	16.1	9.1	1.26	15.0	8.5	1.33	13.8	7.8	1.38
	67	17.4	12.2	1.01	16.2	11.3	1.11	15.0	10.5	1.20	14.0	9.8	1.27	12.8	9.0	1.33
	63	16.4	13.6	0.96	15.2	12.6	1.06	14.1	11.8	1.15	12.8	10.7	1.22	11.7	9.8	1.27
MUZ-FH18NA2 MUZ-FH18NAH2	71	21.1	11.3	1.22	19.7	10.6	1.34	18.5	9.9	1.44	17.2	9.2	1.52	15.8	8.5	1.58
	67	20.0	13.4	1.16	18.6	12.4	1.27	17.2	11.5	1.38	16.0	10.7	1.46	14.7	9.9	1.53
	63	18.7	15.1	1.10	17.4	14.0	1.22	16.2	13.0	1.31	14.7	11.8	1.40	13.4	10.8	1.46

NOTE: 1. IWB : Intake air wet-bulb temperature TC : Total Capacity (x10^3 Btu/h)
SHC : Sensible Heat Capacity (x10^3 Btu/h) TPC : Total Power Consumption (kW)
2. SHC is based on 80˚F of indoor Intake air DB temperature.

2) HEATING CAPACITY

Model	Indoor air	Outdoor intake air WB temperature (˚F)													
	IDB (˚F)	5		15		25		35		43		45		55	
		TC	TPC	TC	TPC	TC	TPC	TC	TPC	TC	TPC	TC	TPC	TC	TPC
MUZ-FH06NA	75	3.8	0.32	5.0	0.41	6.3	0.48	7.5	0.53	8.5	0.56	8.7	0.57	9.9	0.59
	70	4.1	0.31	5.4	0.39	6.5	0.47	7.7	0.52	8.7	0.55	9.0	0.56	10.1	0.58
	65	4.4	0.29	5.5	0.38	6.8	0.45	8.0	0.50	9.0	0.53	9.2	0.54	10.4	0.57
MUZ-FH06NAH	75	3.8	0.45	5.0	0.53	6.3	0.60	7.5	0.53	8.5	0.55	8.7	0.56	9.9	0.58
	70	4.1	0.44	5.4	0.52	6.5	0.59	7.7	0.51	8.7	0.54	9.0	0.55	10.1	0.57
	65	4.4	0.42	5.5	0.50	6.8	0.58	8.0	0.50	9.0	0.53	9.2	0.53	10.4	0.56
MUZ-FH09NA	75	4.8	0.42	6.3	0.53	7.9	0.62	9.4	0.69	10.6	0.73	11.0	0.74	12.4	0.77
	70	5.2	0.40	6.7	0.51	8.2	0.61	9.6	0.67	10.9	0.71	11.2	0.72	12.7	0.75
	65	5.5	0.38	6.9	0.49	8.6	0.59	10.0	0.66	11.2	0.69	11.6	0.70	13.0	0.74
MUZ-FH09NAH	75	4.8	0.55	6.3	0.66	7.9	0.75	9.4	0.69	10.6	0.73	11.0	0.74	12.4	0.77
	70	5.2	0.53	6.7	0.64	8.2	0.74	9.6	0.67	10.9	0.71	11.2	0.72	12.7	0.75
	65	5.5	0.51	6.9	0.62	8.6	0.72	10.0	0.66	11.2	0.69	11.6	0.70	13.0	0.74
MUZ-FH12NA	75	6.0	0.56	7.9	0.71	9.9	0.83	11.8	0.93	13.3	0.97	13.7	0.99	15.5	1.03
	70	6.5	0.54	8.4	0.68	10.2	0.81	12.0	0.90	13.6	0.95	14.0	0.97	15.8	1.01
	65	6.8	0.51	8.6	0.66	10.7	0.78	12.4	0.88	14.0	0.93	14.4	0.94	16.2	0.99
MUZ-FH12NAH	75	6.0	0.69	7.9	0.84	9.9	0.96	11.8	0.93	13.3	0.97	13.7	0.99	15.5	1.03
	70	6.5	0.67	8.4	0.81	10.2	0.94	12.0	0.90	13.6	0.95	14.0	0.97	15.8	1.01
	65	6.8	0.64	8.6	0.79	10.7	0.91	12.4	0.88	14.0	0.93	14.4	0.94	16.2	0.99
MUZ-FH15NA	75	7.9	0.77	10.4	0.97	13.1	1.14	15.6	1.27	17.6	1.33	18.1	1.35	20.5	1.40
	70	8.6	0.73	11.1	0.94	13.5	1.11	15.9	1.24	18.0	1.30	18.5	1.33	21.0	1.38
	65	9.0	0.70	11.3	0.90	14.1	1.07	16.5	1.20	18.5	1.27	19.1	1.29	21.4	1.35
MUZ-FH15NAH	75	7.9	0.90	10.4	1.10	13.1	1.27	15.6	1.27	17.6	1.33	18.1	1.35	20.5	1.40
	70	8.6	0.86	11.1	1.07	13.5	1.24	15.9	1.24	18.0	1.30	18.5	1.33	21.0	1.38
	65	9.0	0.83	11.3	1.03	14.1	1.20	16.5	1.20	18.5	1.27	19.1	1.29	21.4	1.35
MUZ-FH18NA2	75	8.9	1.01	11.8	1.28	14.7	1.51	17.6	1.68	19.8	1.76	20.4	1.79	23.1	1.86
	70	9.6	0.97	12.5	1.24	15.2	1.47	18.0	1.63	20.3	1.72	20.9	1.75	23.6	1.82
	65	10.2	0.93	12.8	1.19	15.9	1.42	18.6	1.59	20.9	1.68	21.5	1.70	24.2	1.79
MUZ-FH18NAH2	75	8.9	1.14	11.8	1.41	14.7	1.64	17.6	1.68	19.8	1.76	20.4	1.79	23.1	1.86
	70	9.6	1.10	12.5	1.37	15.2	1.60	18.0	1.63	20.3	1.72	20.9	1.75	23.6	1.82
	65	10.2	1.06	12.8	1.32	15.9	1.55	18.6	1.59	20.9	1.68	21.5	1.70	24.2	1.79

NOTE: 1. IDB : Intake air dry-bulb temperature
TC : Total Capacity (x10^3 Btu/h) TPC : Total Power Consumption (kW)
2. Above data is for heating operation without any frost.

How to operate with fixed operational frequency of the compressor.

1. Press the EMERGENCY OPERATION switch on the front of the indoor unit, and select either EMERGENCY COOL mode or EMERGENCY HEAT mode before starting to operate the air conditioner.
2. The compressor starts with operational frequency.
3. The fan speed of the indoor unit is High.
4. This operation continues for 30 minutes.
5. In order to release this operation, press the EMERGENCY OPERATION switch twice or once, or press any button on the remote controller.

MUZ-FE09NAH MUZ-FE12NAH

1) COOLING CAPACITY

Model	Indoor air IWB (˚F)	Outdoor intake air DB temperature (˚F)														
		75			85			95			105			115		
		TC	SHC	TPC	TC	SHC	TPC	TC	SHC	TPC	TC	SHC	TPC	TC	SHC	TPC
MUZ-FE09NAH	71	11.0	6.9	0.58	10.3	6.5	0.63	9.7	6.1	0.68	9.0	5.6	0.72	8.3	5.2	0.75
	67	10.4	7.9	0.55	9.7	7.4	0.60	9.0	6.8	0.65	8.4	6.4	0.69	7.7	5.8	0.72
	63	9.8	8.8	0.52	9.1	8.1	0.58	8.5	7.6	0.62	7.7	6.9	0.66	7.0	6.3	0.69
MUZ-FE12NAH	71	14.7	8.8	0.85	13.7	8.2	0.94	12.9	7.7	1.01	12.0	7.2	1.06	11.0	6.6	1.10
	67	13.9	10.2	0.81	13.0	9.5	0.89	12.0	8.8	0.96	11.2	8.1	1.02	10.3	7.5	1.07
	63	13.1	11.3	0.77	12.1	10.5	0.85	11.3	9.7	0.92	10.3	8.9	0.98	9.4	8.1	1.02

NOTE: 1. IWB : Intake air wet-bulb temperature TC : Total Capacity (x10^3 Btu/h)
SHC : Sensible Heat Capacity (x10^3 Btu/h) TPC : Total Power Consumption (kW)
2. SHC is based on 80˚F of indoor Intake air DB temperature.

2) HEATING CAPACITY

Model	Indoor air IDB (˚F)	Outdoor intake air WB temperature (˚F)													
		5		15		25		35		43		45		55	
		TC	TPC	TC	TPC	TC	TPC	TC	TPC	TC	TPC	TC	TPC	TC	TPC
MUZ-FE09NAH	75	4.8	0.57	6.3	0.69	7.9	0.79	9.4	0.73	10.6	0.77	11.0	0.78	12.4	0.81
	70	5.2	0.55	6.7	0.67	8.2	0.77	9.6	0.71	10.9	0.75	11.2	0.77	12.7	0.80
	65	5.5	0.54	6.9	0.65	8.6	0.75	10.0	0.69	11.2	0.73	11.6	0.74	13.0	0.78
MUZ-FE12NAH	75	6.0	0.71	7.9	0.86	9.9	0.99	11.8	0.96	13.3	1.00	13.7	1.02	15.5	1.06
	70	6.5	0.68	8.4	0.84	10.2	0.97	12.0	0.93	13.6	0.98	14.0	1.00	15.8	1.04
	65	6.8	0.66	8.6	0.81	10.7	0.94	12.4	0.91	14.0	0.96	14.4	0.97	16.2	1.02

NOTE: 1. IDB : Intake air dry-bulb temperature
TC : Total Capacity (x10^3 Btu/h) TPC : Total Power Consumption (kW)
2. Above data is for heating operation without any frost.

How to operate with fixed operational frequency of the compressor.
1. Press the EMERGENCY OPERATION switch on the front of the indoor unit, and select either EMERGENCY COOL mode or EMERGENCY HEAT mode before starting to operate the air conditioner.
2. The compressor starts with operational frequency.
3. The fan speed of the indoor unit is High.
4. This operation continues for 30 minutes.
5. In order to release this operation, press the EMERGENCY OPERATION switch twice or once, or press any button on the remote controller.

MUZ-D30NA MUZ-D36NA MUY-D30NA MUY-D36NA

1) COOLING CAPACITY

Model	Indoor air IWB (˚F)	Outdoor intake air DB temperature (˚F)														
		75			85			95			105			115		
		TC	SHC	TPC	TC	SHC	TPC	TC	SHC	TPC	TC	SHC	TPC	TC	SHC	TPC
MUZ-D30NA	71	37.6	19.1	3.43	35.2	17.8	3.75	33.0	16.7	4.04	30.7	15.6	4.25	28.2	14.3	4.43
	67	35.6	22.8	3.23	33.2	21.2	3.56	30.7	19.6	3.85	28.6	18.3	4.08	26.2	16.8	4.27
	63	33.5	25.9	3.08	31.0	24.0	3.41	28.9	22.3	3.68	26.2	20.3	3.93	23.9	18.5	4.08
MUZ-D36NA	71	40.7	19.8	3.88	38.0	18.5	4.25	35.7	17.4	4.58	33.2	16.2	4.82	30.5	14.9	5.01
	67	38.5	23.9	3.66	35.9	22.2	4.03	33.2	20.6	4.36	30.9	19.1	4.62	28.4	17.6	4.84
	63	36.2	27.3	3.49	33.5	25.3	3.86	31.2	23.5	4.16	28.4	21.4	4.45	25.9	19.5	4.62
MUY-D30NA	71	37.6	19.1	3.01	35.2	17.8	3.30	33.0	16.7	3.55	30.7	15.6	3.73	28.2	14.3	3.89
	67	35.6	22.8	2.84	33.2	21.2	3.13	30.7	19.6	3.38	28.6	18.3	3.58	26.2	16.8	3.75
	63	33.5	25.9	2.70	31.0	24.0	2.99	28.9	22.3	3.23	26.2	20.3	3.45	23.9	18.5	3.58
MUY-D36NA (208 V)	71	40.7	19.8	3.75	38.0	18.5	4.10	35.7	17.4	4.42	33.2	16.2	4.65	30.5	14.9	4.84
	67	38.5	23.9	3.54	35.9	22.2	3.89	33.2	20.6	4.21	30.9	19.1	4.46	28.4	17.6	4.67
	63	36.2	27.3	3.37	33.5	25.3	3.73	31.2	23.5	4.02	28.4	21.4	4.29	25.9	19.5	4.46
MUY-D36NA (230 V)	71	42.4	20.6	3.77	39.6	19.3	4.13	37.2	18.1	4.45	34.6	16.8	4.69	31.8	15.5	4.88
	67	40.1	24.9	3.56	37.4	23.2	3.92	34.6	21.5	4.24	32.2	20.0	4.49	29.6	18.3	4.71
	63	37.7	28.4	3.39	34.9	26.3	3.75	32.5	24.5	4.05	29.6	22.3	4.32	27.0	20.3	4.49

NOTE: 1. IWB: Intake air wet-bulb temperature
TC: Total Capacity ($\times 10^3$ Btu/h)
SHC: Sensible Heat Capacity ($\times 10^3$ Btu/h)
TPC: Total Power Consumption (kW)
2. SHC is based on 80˚F of indoor Intake air DB temperature.

2) HEATING CAPACITY

Model	Indoor air IDB (˚F)	Outdoor intake air WB temperature (˚F)											
		15		25		35		43		45		55	
		TC	TPC	TC	TPC	TC	TPC	TC	TPC	TC	TPC	TC	TPC
MUZ-D30NA	75	18.9	2.50	23.6	2.94	28.2	3.28	31.8	3.44	32.8	3.49	37.2	3.63
	70	20.0	2.42	24.5	2.87	28.9	3.19	32.6	3.36	33.6	3.43	38.0	3.56
	65	20.5	2.32	25.6	2.77	29.8	3.11	33.6	3.28	34.6	3.33	38.8	3.49
MUZ-D36NA	75	20.4	2.86	25.5	3.36	30.4	3.74	34.3	3.94	35.4	3.99	40.1	4.15
	70	21.6	2.76	26.4	3.28	31.2	3.65	35.2	3.84	36.3	3.92	41.0	4.07
	65	22.2	2.65	27.6	3.17	32.2	3.55	36.3	3.74	37.3	3.80	41.9	3.99

NOTE: 1. IDB: Intake air dry-bulb temperature
TC: Total Capacity ($\times 10^3$ Btu/h)
TPC: Total Power Consumption (kW)
2. Above data is for heating operation without any frost.

How to operate with fixed operational frequency of the compressor.
1. Press the EMERGENCY OPERATION switch on the front of the indoor unit, and select either EMERGENCY COOL mode or EMERGENCY HEAT mode before starting to operate the air conditioner.
2. The compressor starts with operational frequency.
3. The fan speed of the indoor unit is High.
4. This operation continues for 30 minutes.
5. In order to release this operation, press the EMERGENCY OPERATION switch twice or once, or press any button on the remote controller.

MUFZ-KJ09NAHZ MUFZ-KJ12NAHZ MUFZ-KJ15NAHZ MUFZ-KJ18NAHZ

1) COOLING CAPACITY

Model	Indoor air	Outdoor intake air DB temperature (˚F)														
	IWB (˚F)	75			85			95			105			115		
		TC	SHC	TPC	TC	SHC	TPC	TC	SHC	TPC	TC	SHC	TPC	TC	SHC	TPC
MUFZ-KJ09NAHZ	71	11.0	7.2	0.51	10.3	6.8	0.56	9.7	6.4	0.60	9.0	5.9	0.63	8.3	5.4	0.66
	67	10.4	8.2	0.48	9.7	7.7	0.53	9.0	7.1	0.57	8.4	6.6	0.60	7.7	6.1	0.63
	63	9.8	9.1	0.46	9.1	8.4	0.50	8.5	7.8	0.54	7.7	7.1	0.58	7.0	6.5	0.60
MUFZ-KJ12NAHZ	71	14.7	8.3	0.79	13.7	7.8	0.87	12.9	7.3	0.93	12.0	6.8	0.98	11.0	6.3	1.02
	67	13.9	9.7	0.75	13.0	9.1	0.82	12.0	8.4	0.89	11.2	7.8	0.94	10.3	7.2	0.99
	63	13.1	10.9	0.71	12.1	10.1	0.79	11.3	9.4	0.85	10.3	8.6	0.91	9.4	7.8	0.94
MUFZ-KJ15NAHZ	71	18.4	9.7	1.00	17.2	9.0	1.09	16.1	8.5	1.18	15.0	7.9	1.24	13.8	7.3	1.29
	67	17.4	11.5	0.94	16.2	10.7	1.04	15.0	9.9	1.12	14.0	9.2	1.19	12.8	8.5	1.24
	63	16.4	13.0	0.90	15.2	12.0	0.99	14.1	11.2	1.07	12.8	10.2	1.14	11.7	9.3	1.19
MUFZ-KJ18NAHZ	71	20.8	10.8	1.20	19.5	10.1	1.32	18.3	9.4	1.42	17.0	8.8	1.49	15.6	8.1	1.55
	67	19.7	12.8	1.13	18.4	11.9	1.25	17.0	11.1	1.35	15.8	10.3	1.43	14.5	9.4	1.50
	63	18.5	14.5	1.08	17.2	13.4	1.19	16.0	12.5	1.29	14.5	11.4	1.38	13.3	10.4	1.43

OTE: 1. IWB: Intake air wet-bulb temperature
TC: Total Capacity ($\times 10^3$ Btu/h)
SHC: Sensible Heat Capacity ($\times 10^3$ Btu/h)
TPC: Total Power Consumption (kW)
2. SHC is based on 80˚F of indoor Intake air DB temperature.

2) HEATING CAPACITY

Model	Indoor air	Outdoor intake air WB temperature (˚F)													
	IDB (˚F)	5		15		25		35		43		45		55	
		TC	TPC	TC	TPC	TC	TPC	TC	TPC	TC	TPC	TC	TPC	TC	TPC
MUFZ-KJ09NAHZ	75	4.8	0.57	6.4	0.69	8.0	0.79	9.5	0.73	10.7	0.77	11.1	0.78	12.5	0.81
	70	5.2	0.55	6.8	0.67	8.3	0.77	9.7	0.71	11.0	0.75	11.3	0.77	12.8	0.80
	65	5.5	0.54	6.9	0.65	8.6	0.75	10.1	0.69	11.3	0.73	11.7	0.74	13.1	0.78
MUFZ-KJ12NAHZ	75	5.7	0.66	7.5	0.80	9.4	0.92	11.2	0.88	12.7	0.92	13.1	0.94	14.8	0.97
	70	6.2	0.64	8.0	0.78	9.8	0.90	11.5	0.86	13.0	0.90	13.4	0.92	15.1	0.95
	65	6.5	0.62	8.2	0.75	10.2	0.87	11.9	0.83	13.4	0.88	13.8	0.89	15.5	0.94
MUFZ-KJ15NAHZ	75	7.9	0.95	10.4	1.17	13.1	1.35	15.6	1.37	17.6	1.45	18.1	1.47	20.5	1.52
	70	8.6	0.92	11.1	1.14	13.5	1.33	15.9	1.34	18.0	1.41	18.5	1.44	21.0	1.49
	65	9.0	0.88	11.3	1.09	14.1	1.28	16.5	1.30	18.5	1.37	19.1	1.40	21.4	1.47
MUFZ-KJ18NAHZ	75	9.2	1.14	12.2	1.41	15.2	1.63	18.2	1.69	20.5	1.77	21.1	1.80	23.9	1.87
	70	10.0	1.10	12.9	1.37	15.8	1.60	18.6	1.64	21.0	1.73	21.6	1.76	24.5	1.83
	65	10.5	1.05	13.2	1.31	16.5	1.55	19.2	1.60	21.6	1.69	22.3	1.71	25.0	1.80

NOTE: 1. IDB: Intake air dry-bulb temperature
TC: Total Capacity ($\times 10^3$ Btu/h)
TPC: Total Power Consumption (kW)
2. Above data is for heating operation without any frost.

How to operate with fixed operational frequency of the compressor.
1. Press the EMERGENCY OPERATION switch on the front of the indoor unit, and select either EMERGENCY COOL mode or EMERGENCY HEAT mode before starting to operate the air conditioner.
2. The compressor starts with operational frequency.
3. The fan speed of the indoor unit is High.
4. This operation continues for 30 minutes.
5. In order to release this operation, press the EMERGENCY OPERATION switch twice or once, or press any button on the remote controller.

8-2. PERFORMANCE CURVE

NOTE : A point on the curve shows the reference point.

Cooling

MU-A09WA

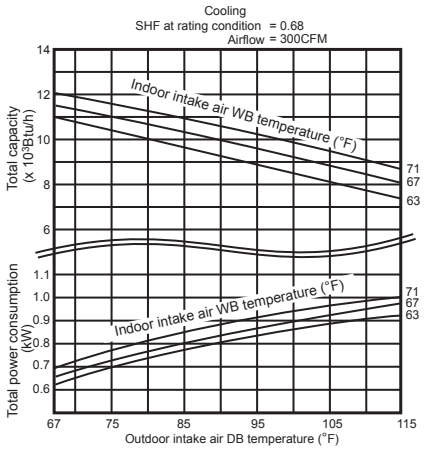

MU-A12WA

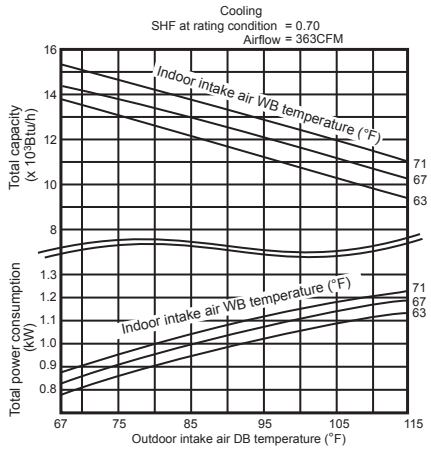

MUZ-GL09NA MUZ-GL09NAH MUY-GL09NA

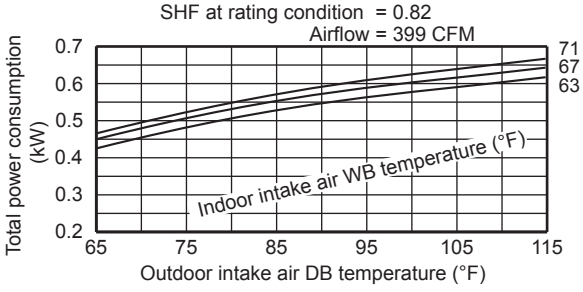

MUZ-GL12NA MUZ-GL12NAH MUY-GL12NA

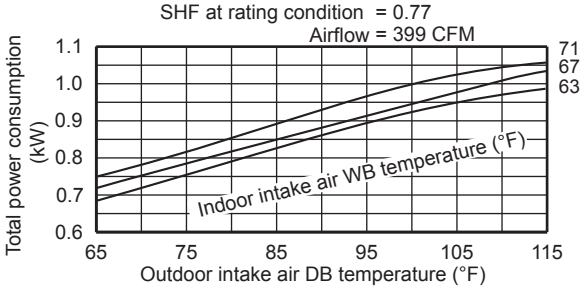

MUZ-GL15NA MUZ-GL15NAH MUY-GL15NA

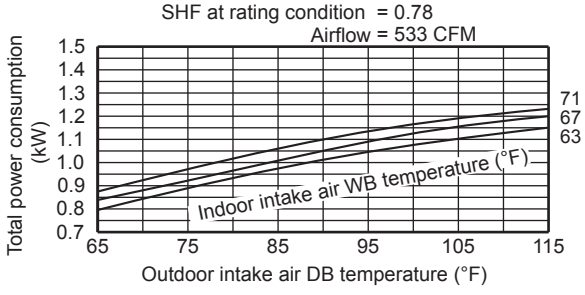

MUZ-GL18NA MUZ-GL18NAH MUY-GL18NA

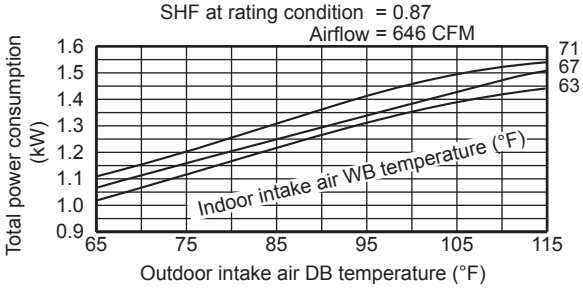

MUZ-GL24NA MUZ-GL24NAH MUY-GL24NA

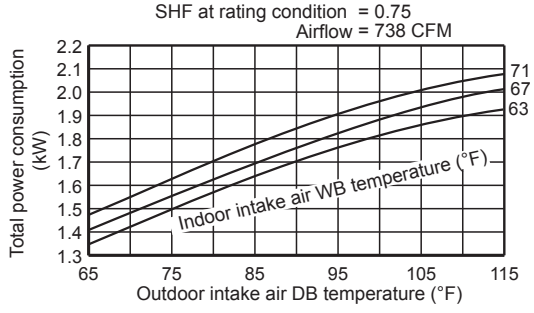

MUZ-HM09NA

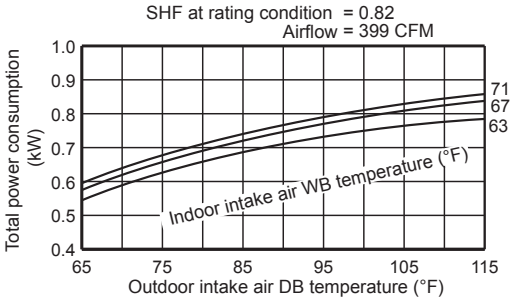

MUZ-HM12NA

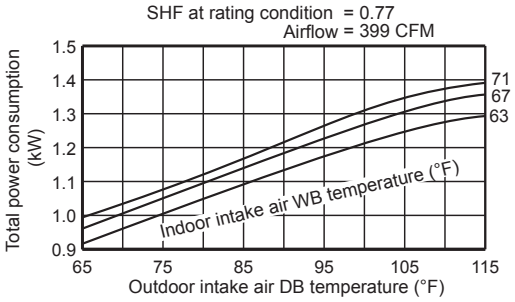

MUZ-HM15NA

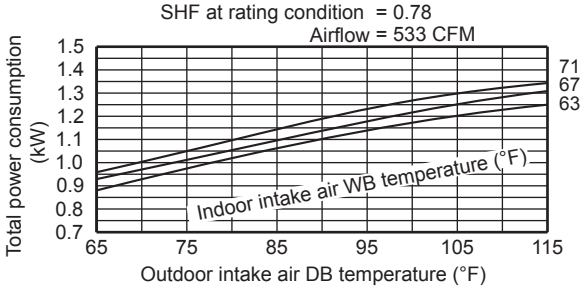

MUZ-HM18NA

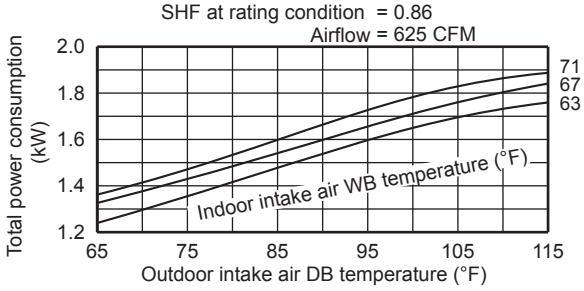

MUZ-HM24NA

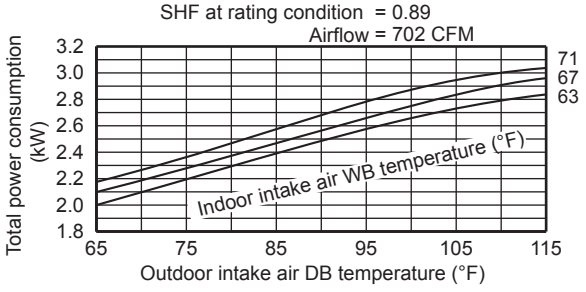

MUZ-FH06NA MUZ-FH06NAH

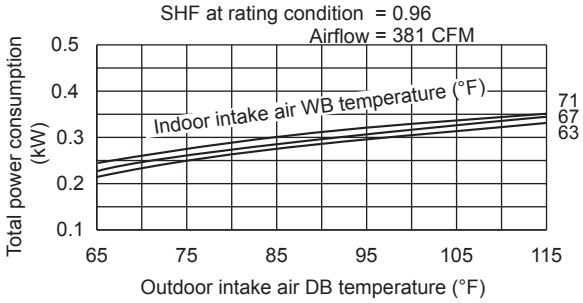

MUZ-FH09NA MUZ-FH09NAH

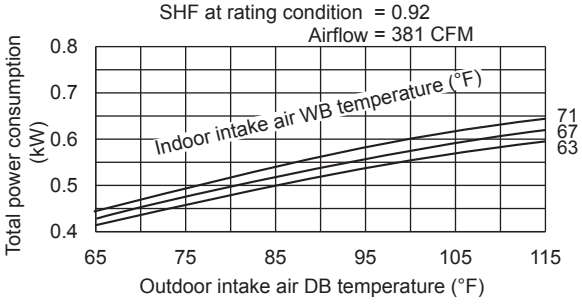

MUZ-FH12NA MUZ-FH12NAH

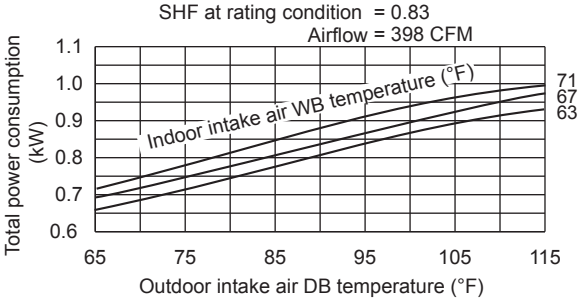

MUZ-FH15NA MUZ-FH15NAH

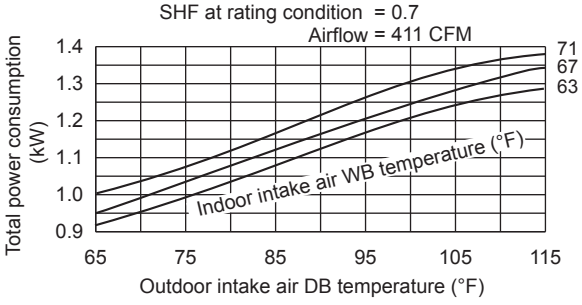

MUZ-FH18NA2 MUZ-FH18NAH2

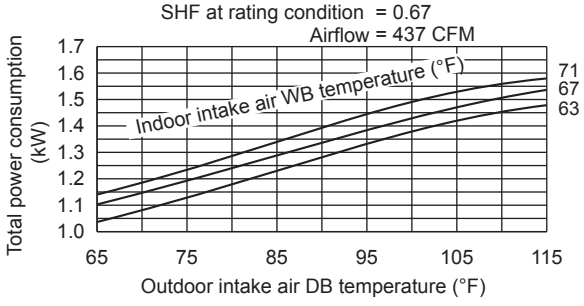

MUZ-FE09NAH

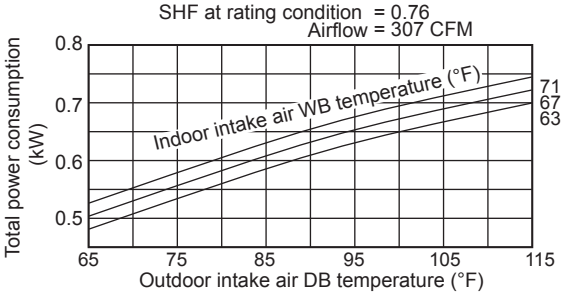

MUZ-FE12NAH

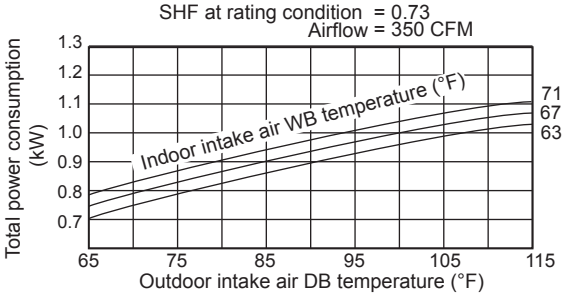

MUZ-D30NA

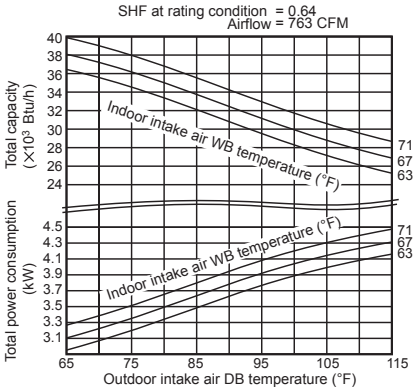

MUZ-D36NA

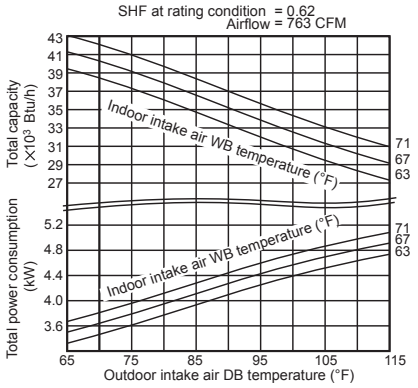

MUY-D30NA

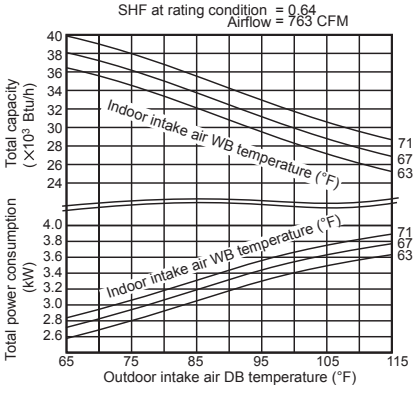

MUY-D36NA

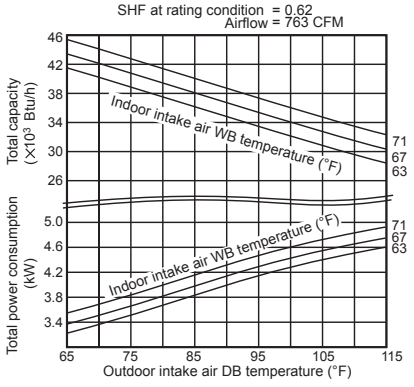

SUZ-KA·NA

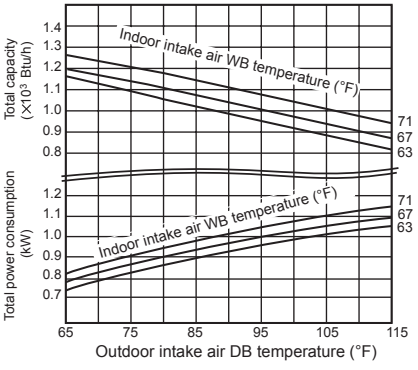

MUFZ-KJ09NAHZ

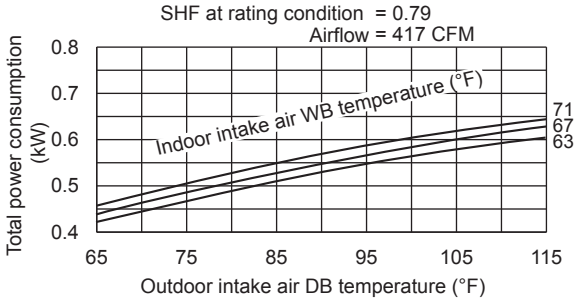

MUFZ-KJ12NAHZ

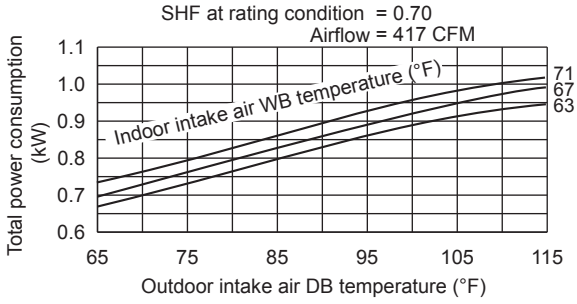

MUFZ-KJ15NAHZ

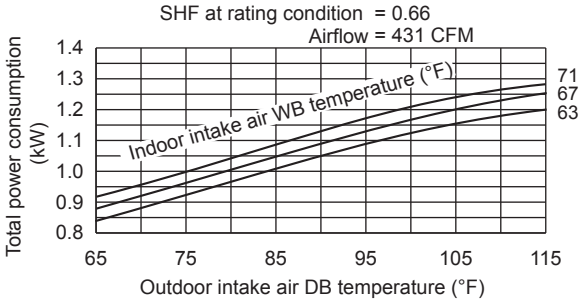

MUFZ-KJ18NAHZ

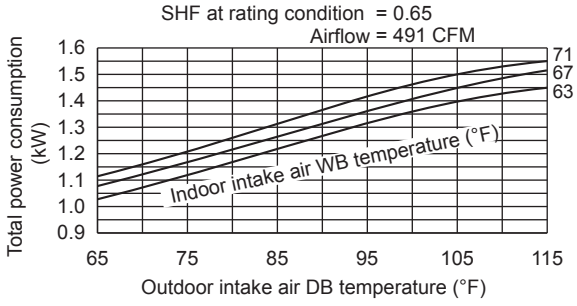

Heating

MUZ-GL09NA

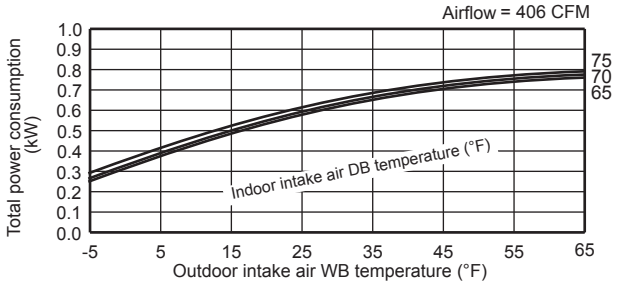

MUZ-GL09NAH

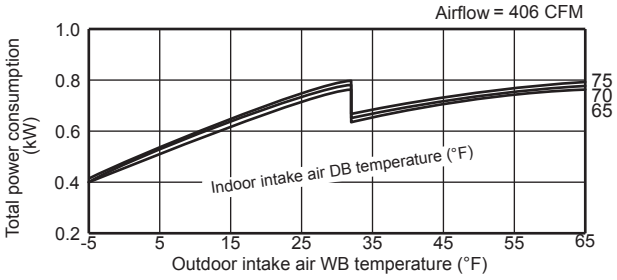

MUZ-GL12NA

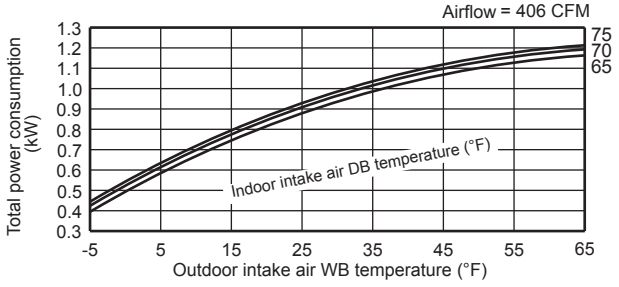

MUZ-GL12NAH

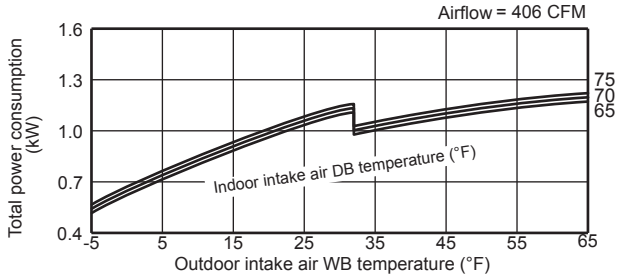

MUZ-GL15NA

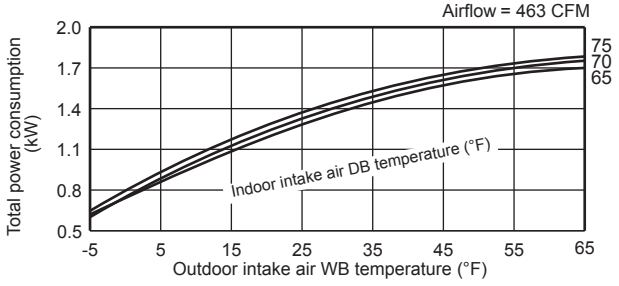

MUZ-GL15NAH

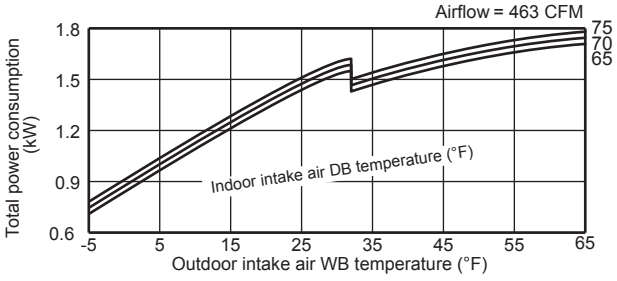

MUZ-GL18NA

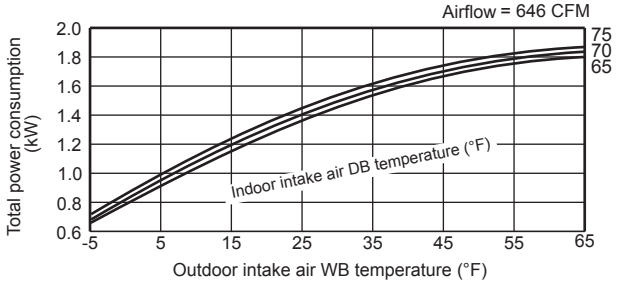

MUZ-GL18NAH

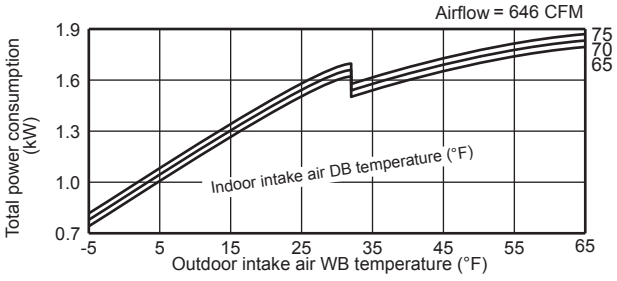

MUZ-GL24NA

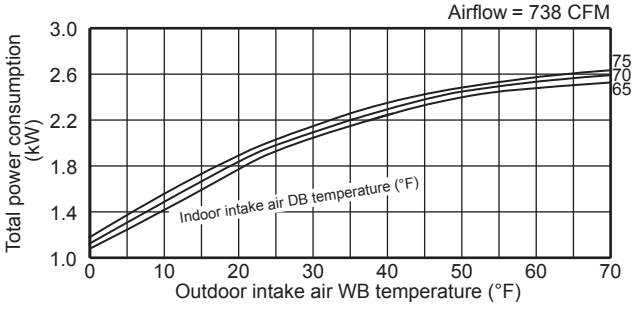

MUZ-GL24NAH

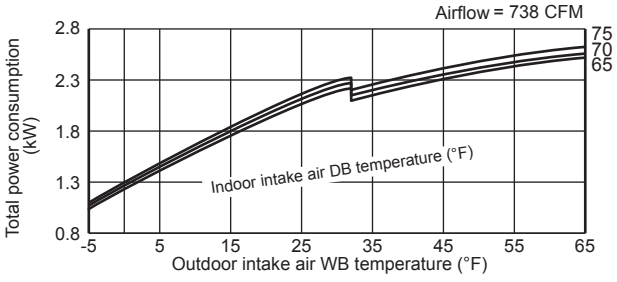

MUZ-HM09NA

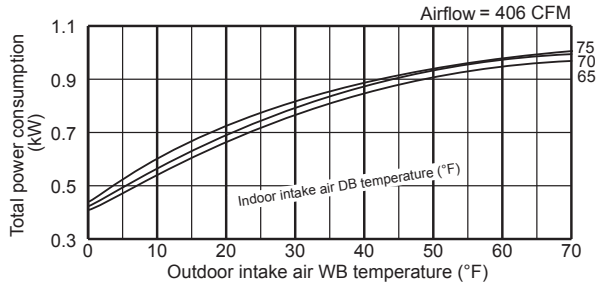

MUZ-HM12NA

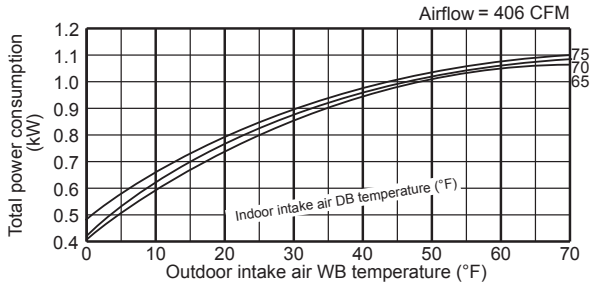

MUZ-HM15NA

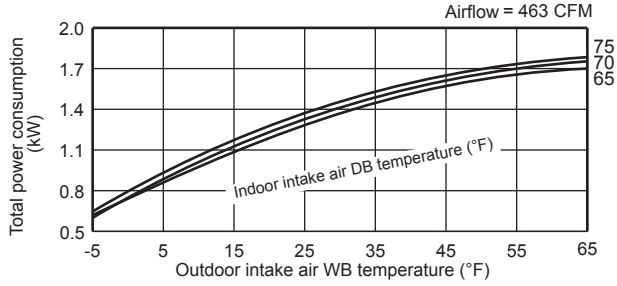

MUZ-HM18NA

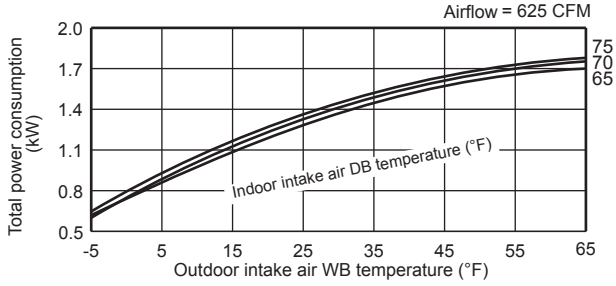

MUZ-HM24NA

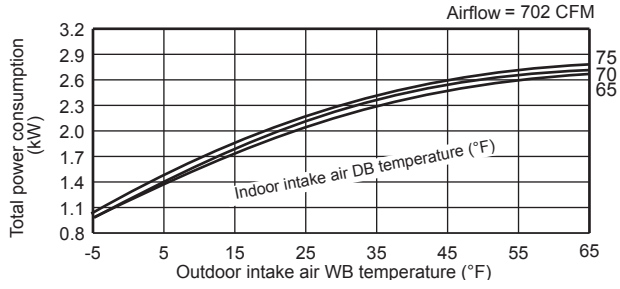

MUZ-FH06NA

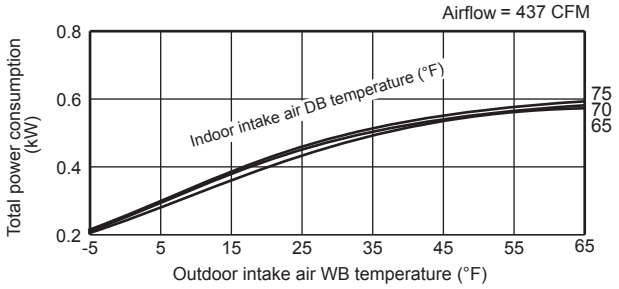

MUZ-FH06NAH

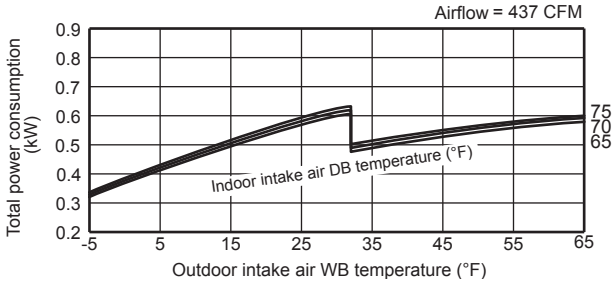

MUZ-FH09NA

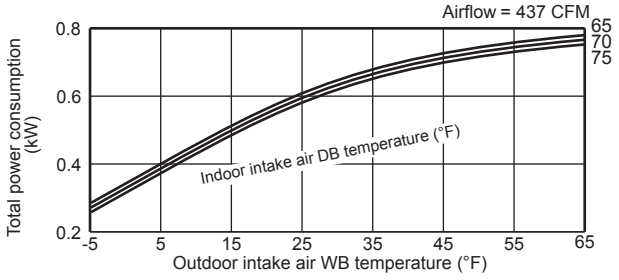

MUZ-FH09NAH

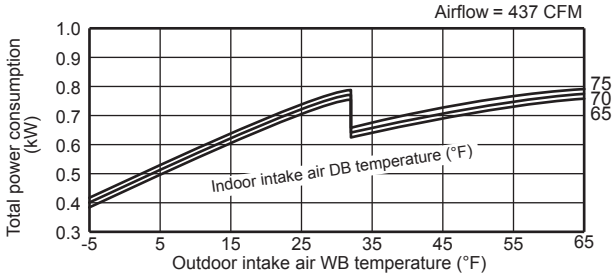

MUZ-FH12NA

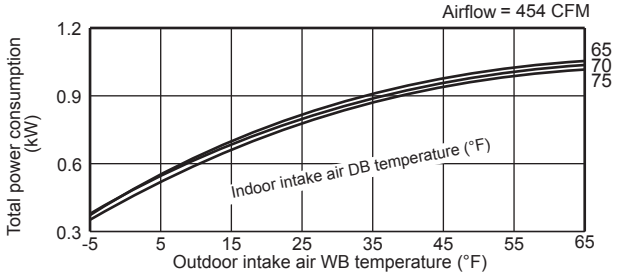

MUZ-FH12NAH

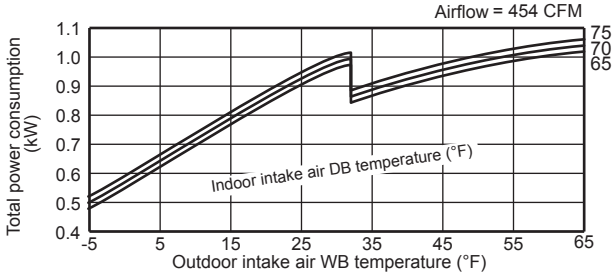

MUZ-FH15NA

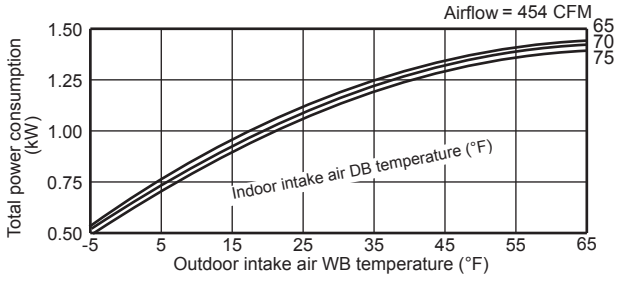

MUZ-FH15NAH

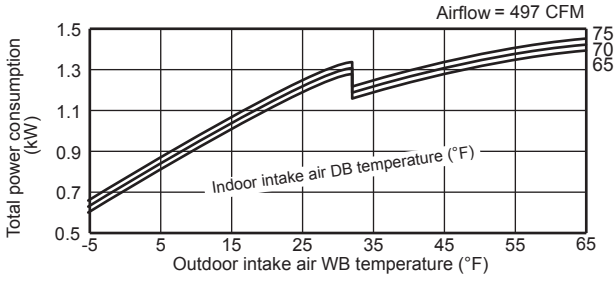

MUZ-FH18NA2

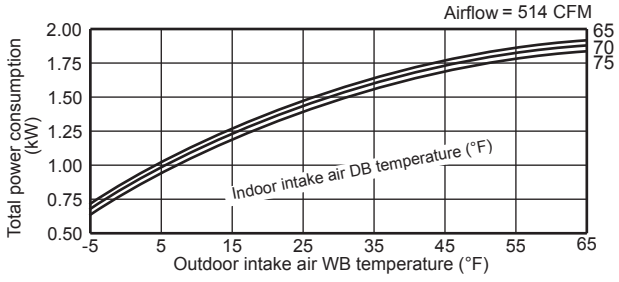

MUZ-FH18NAH2

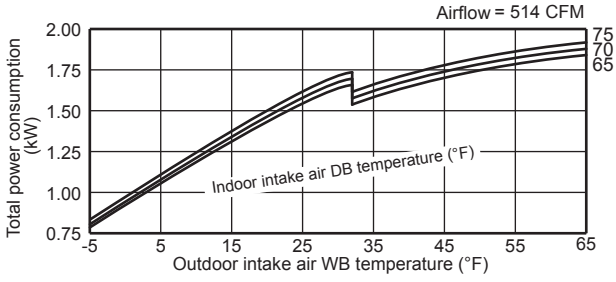

MUZ-FE09NAH

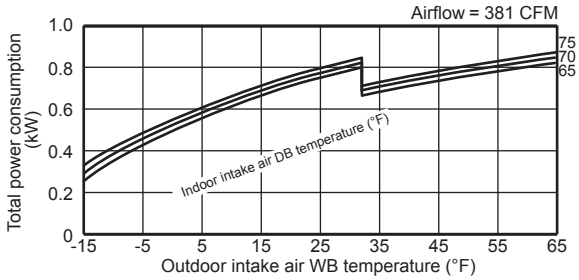

MUZ-FE12NAH

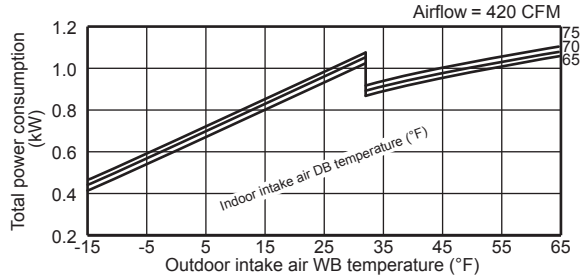

MUZ-D30NA

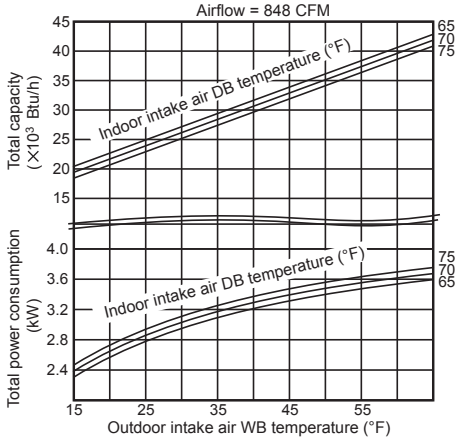

MUZ-D36NA

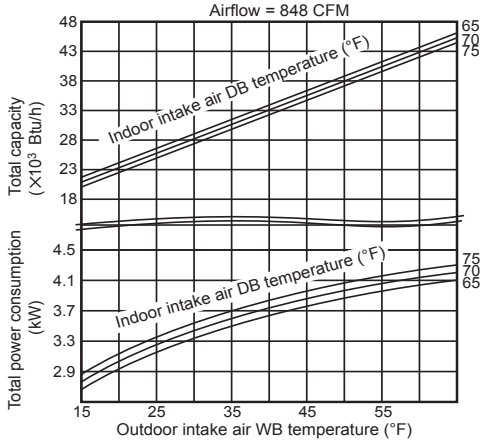

SUZ-KA09NA SUZ-KA12NA SUZ-KA15NA

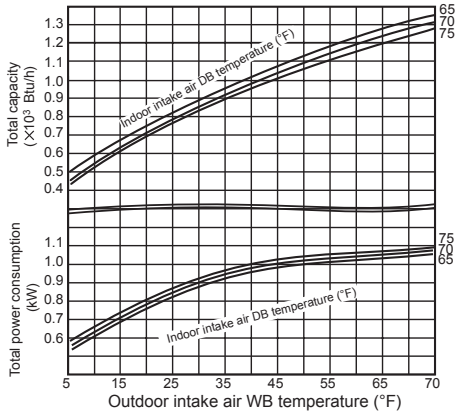

SUZ-KA18NA

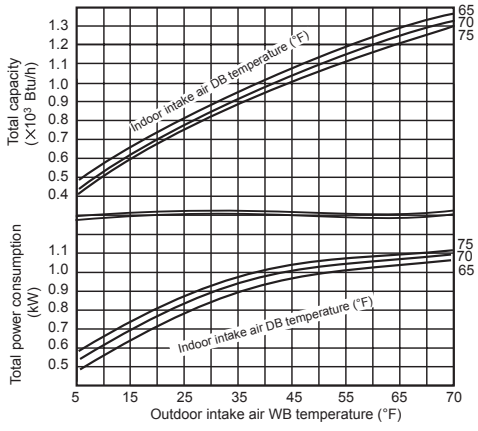

MUFZ-KJ09NAHZ

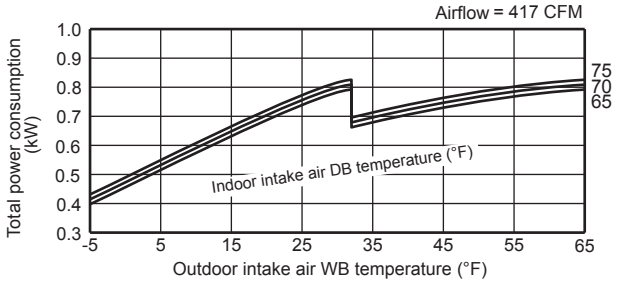

MUFZ-KJ12NAHZ

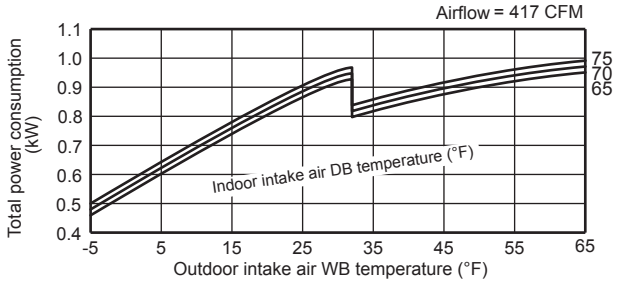

MUFZ-KJ15NAHZ

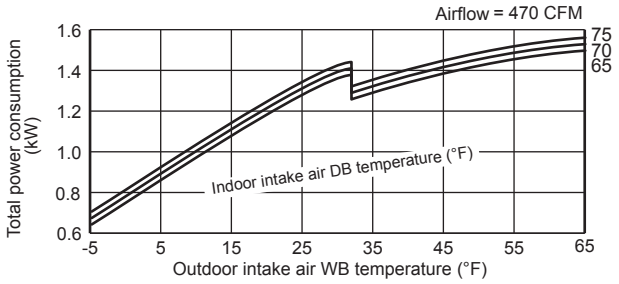

MUFZ-KJ18NAHZ

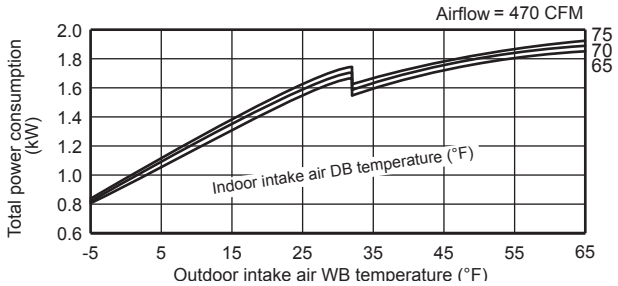

8-3. CONDENSING PRESSURE

Cooling

Data is based on the condition of indoor humidity 50%.
Air flow should be set at High.
A point on the curve shows the reference point.

MU-A09WA

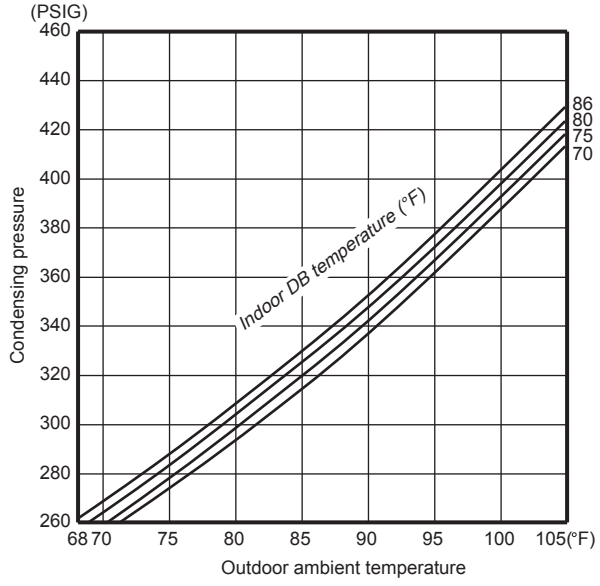

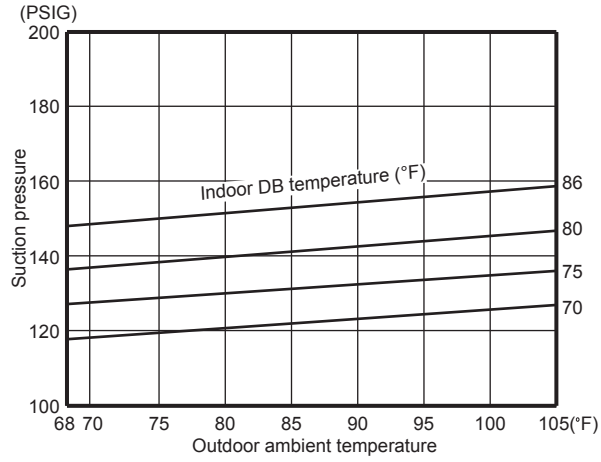

MU-A12WA

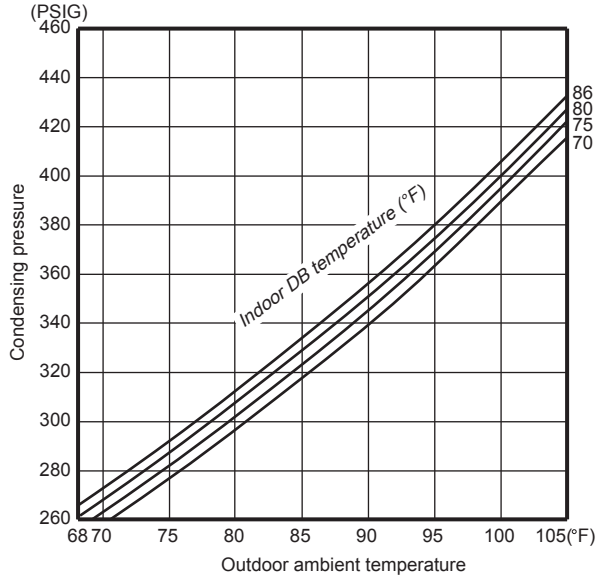

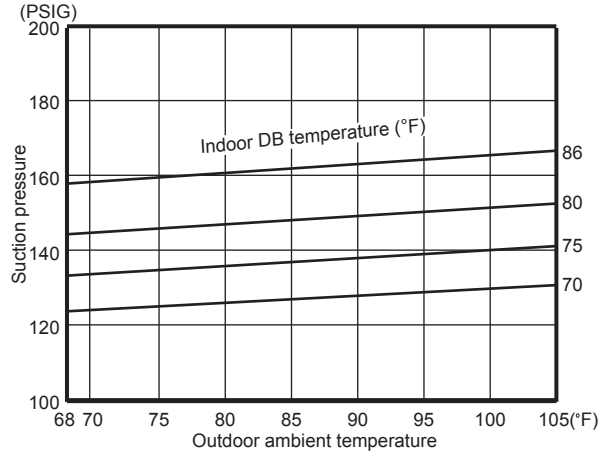

MUZ-GL09NA MUZ-GL09NAH MUY-GL09NA

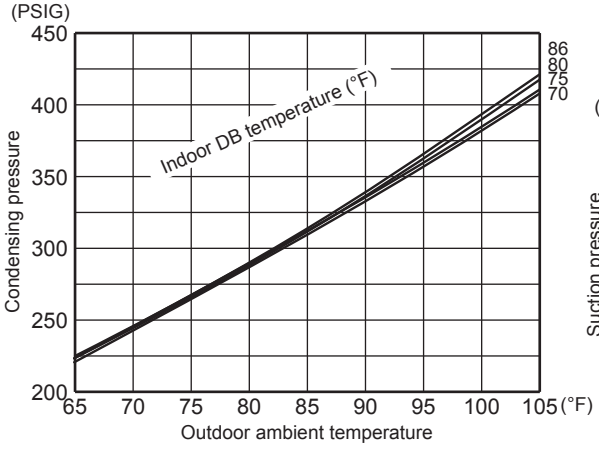

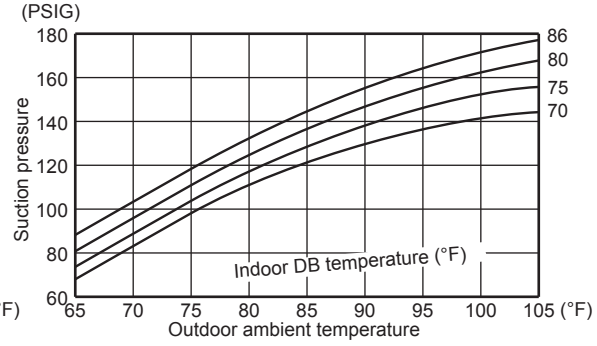

MUZ-GL12NA MUZ-GL12NAH MUY-GL12NA

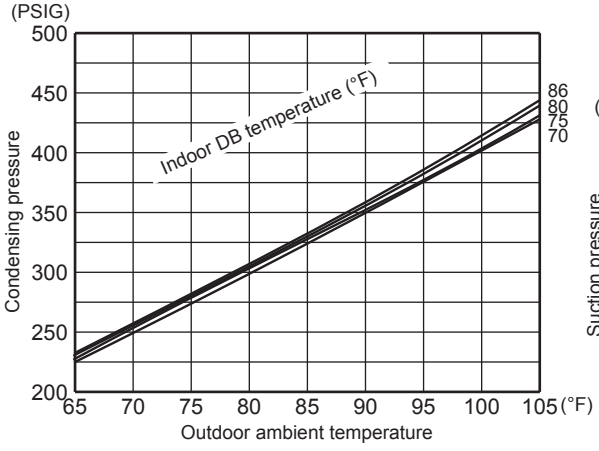

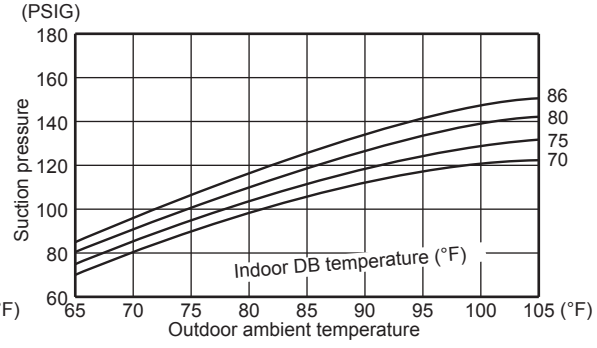

MUZ-GL15NA MUZ-GL15NAH MUY-GL15NA

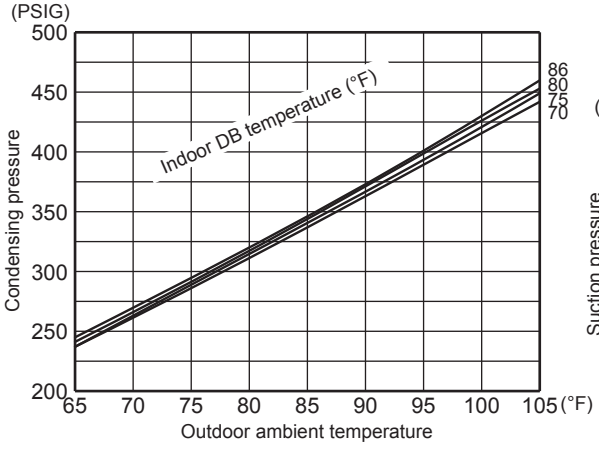

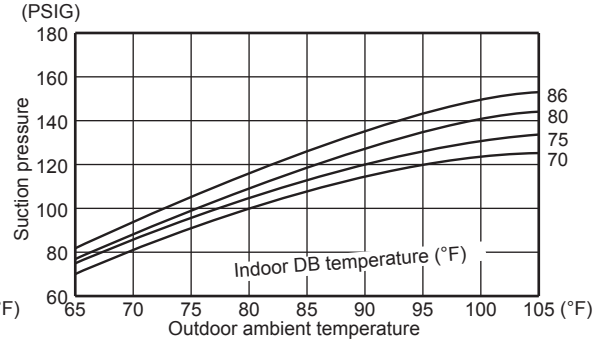

MUZ-GL18NA MUZ-GL18NAH MUY-GL18NA

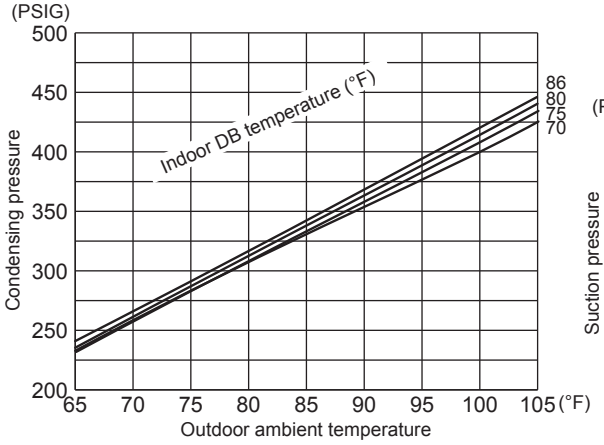

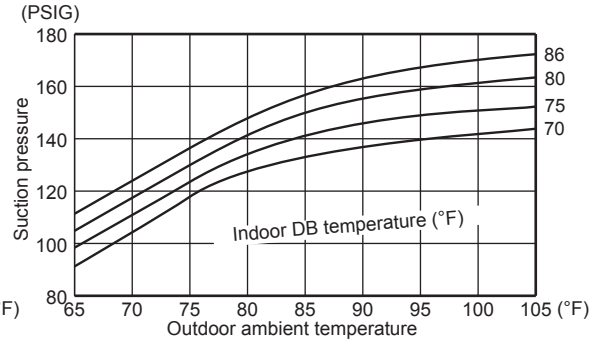

MUZ-GL24NA MUZ-GL24NAH MUY-GL24NA

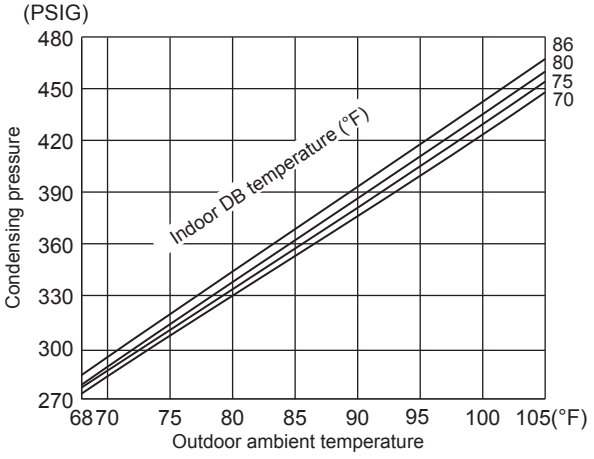

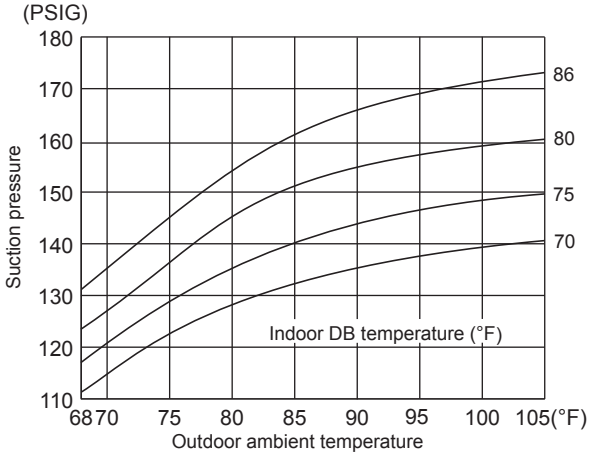

MUZ-HM09NA

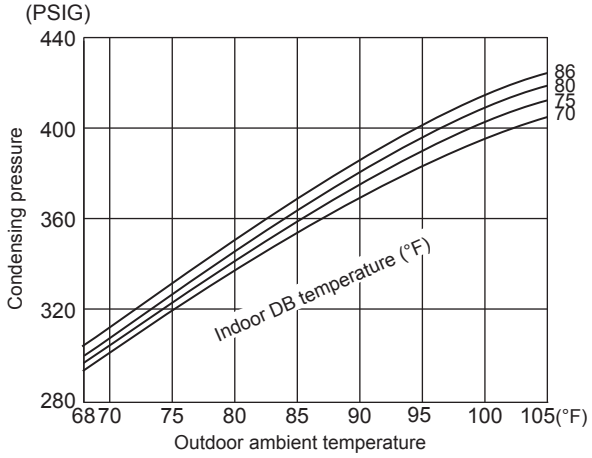

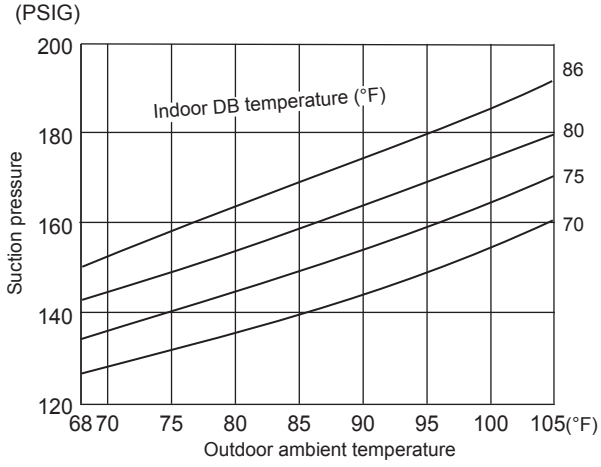

MUZ-HM12NA - U1

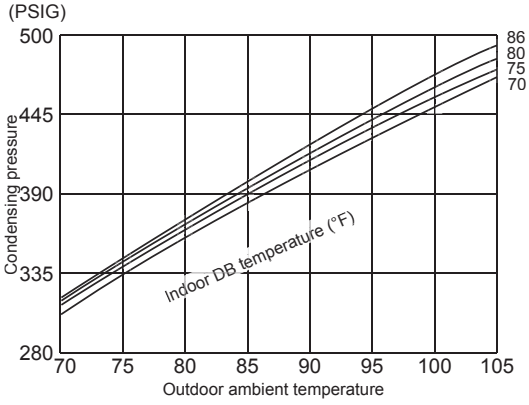

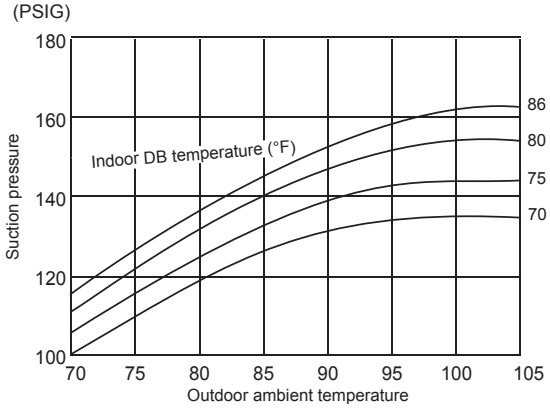

MUZ-HM12NA - U8

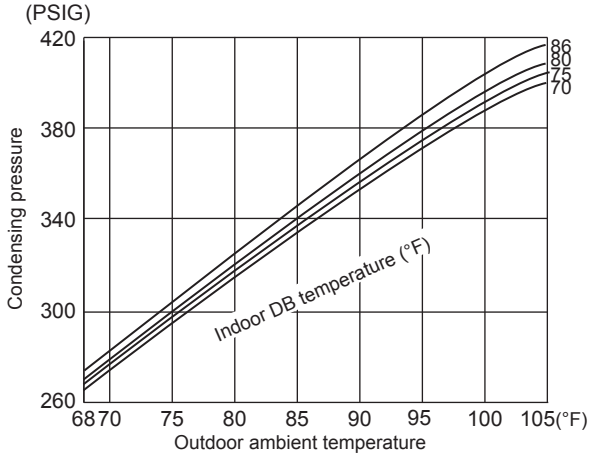

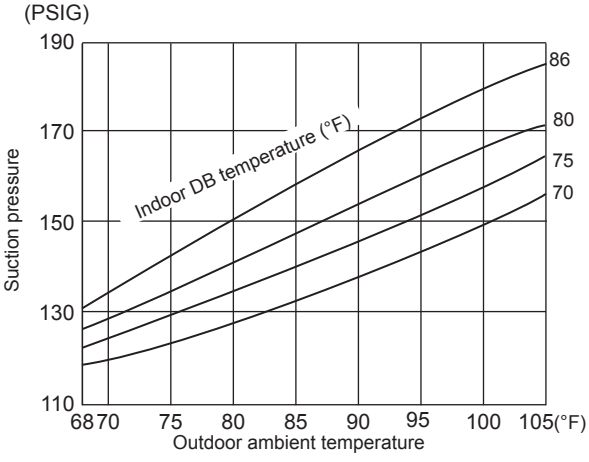

MUZ-HM15NA

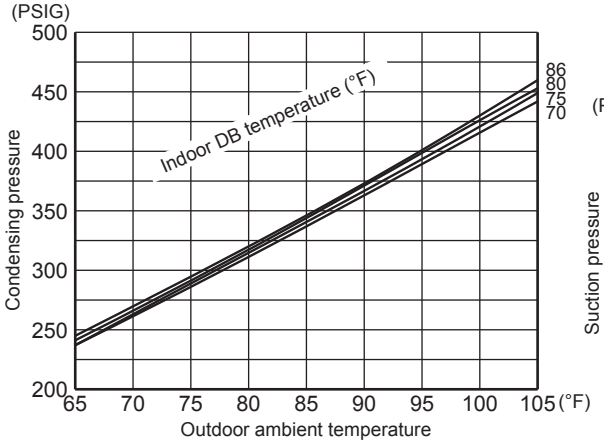

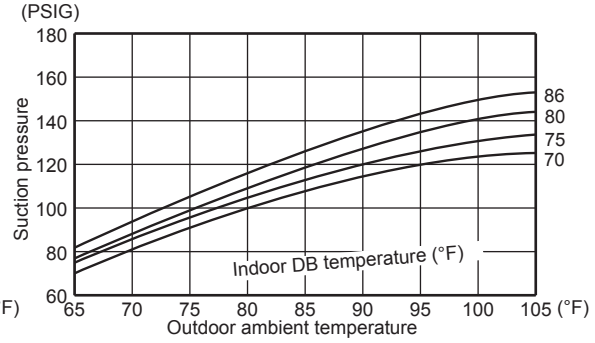

MUZ-HM18NA

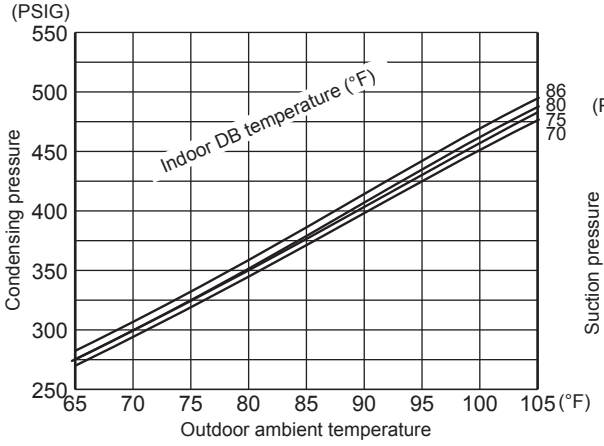

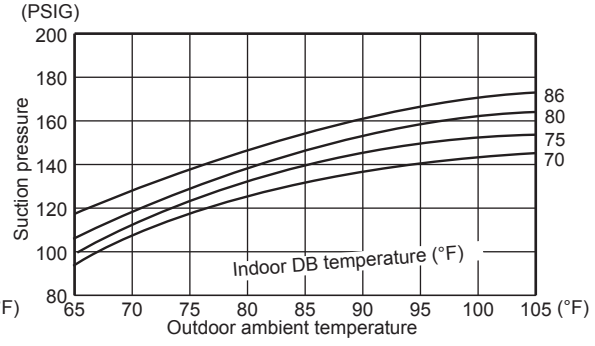

MUZ-HM24NA

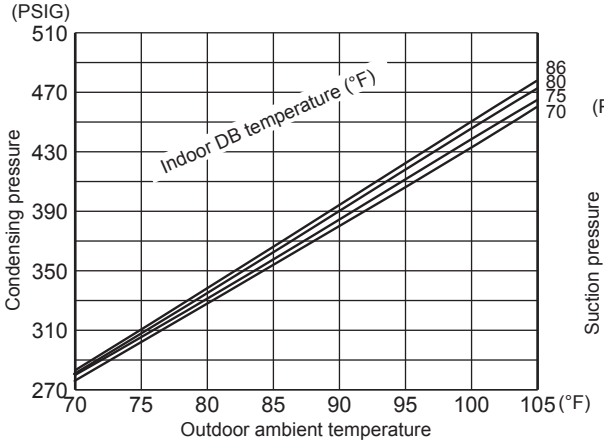

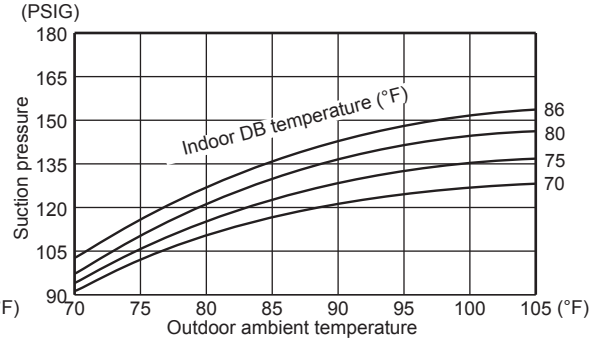

MUZ-FH06NA MUZ-FH06NAH

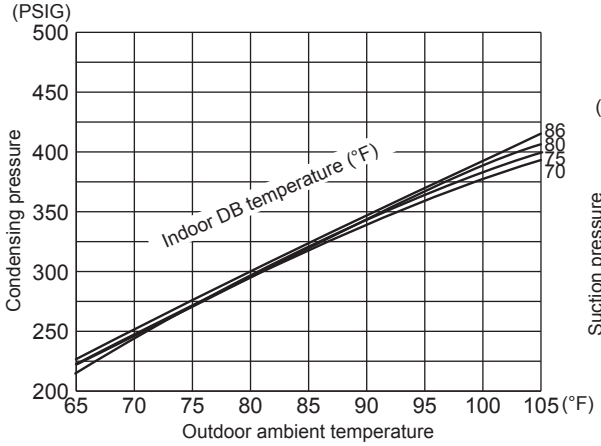

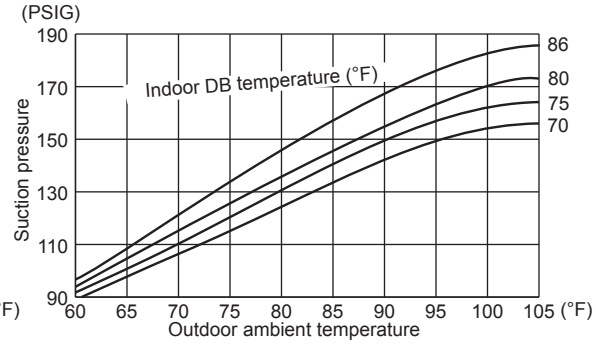

MUZ-FH09NA MUZ-FH09NAH

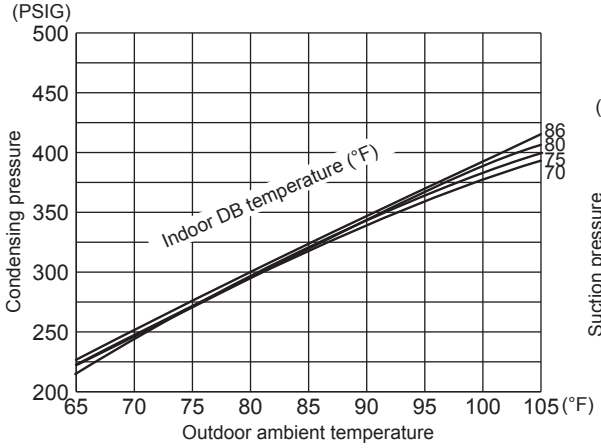

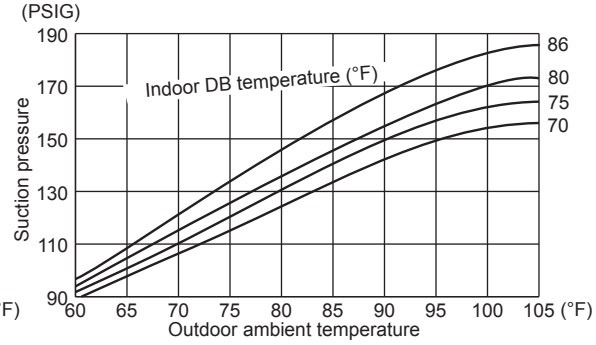

MUZ-FH12NA MUZ-FH12NAH

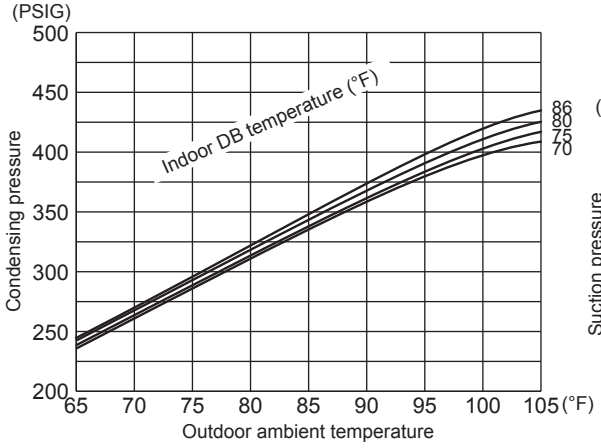

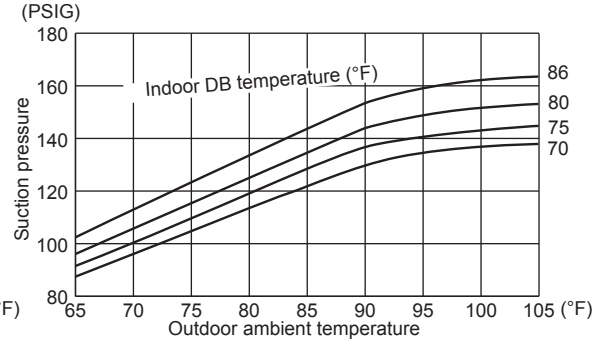

MUZ-FH15NA MUZ-FH15NAH

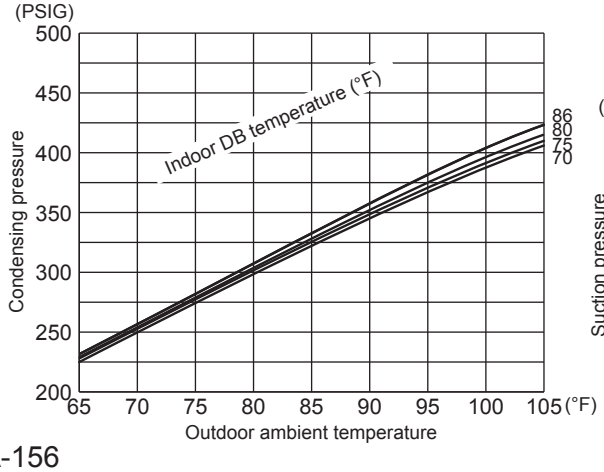

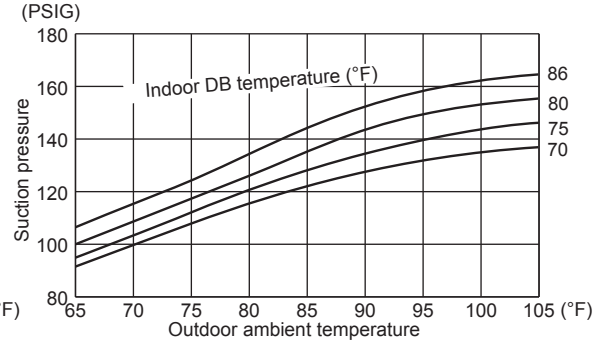

MUZ-FH18NA2 MUZ-FH18NAH2

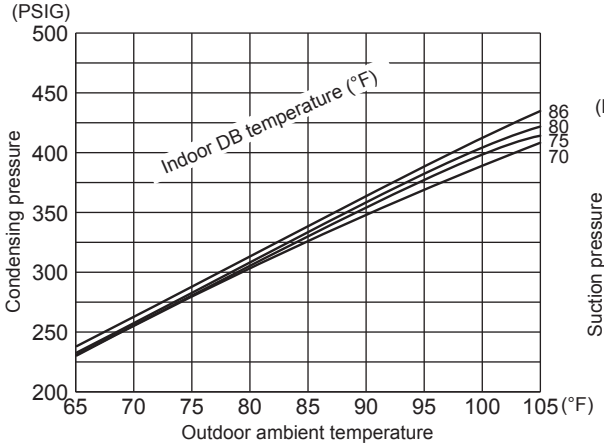

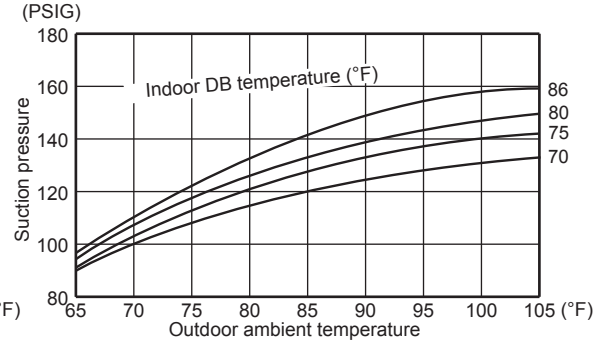

MUZ-FE09NAH

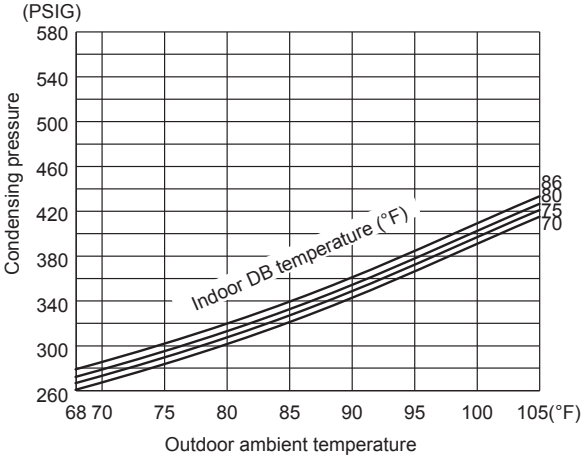

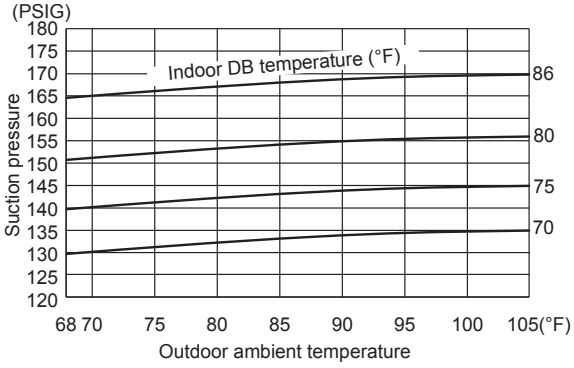

MUZ-FE12NAH

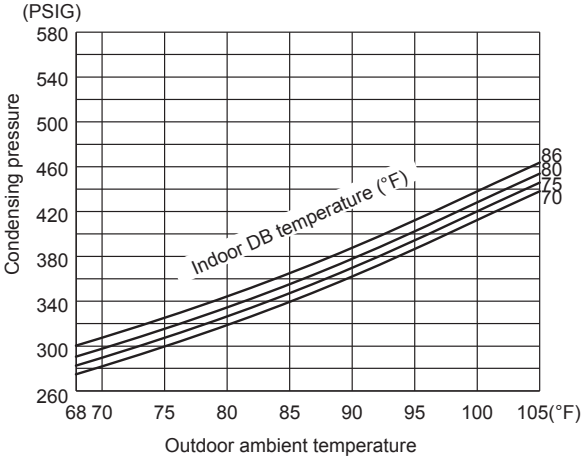

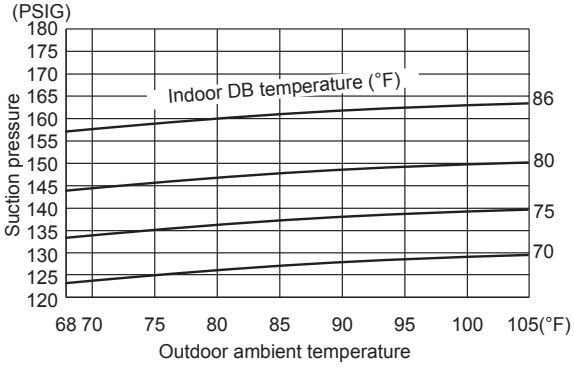

MUZ-D30NA

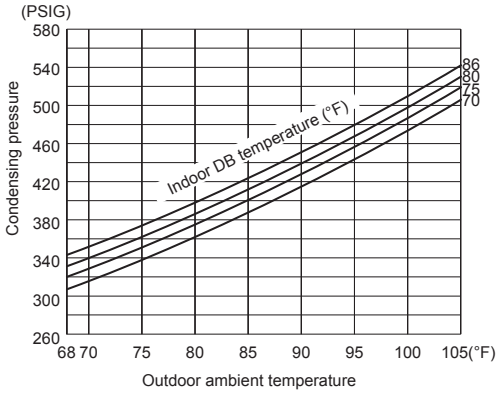

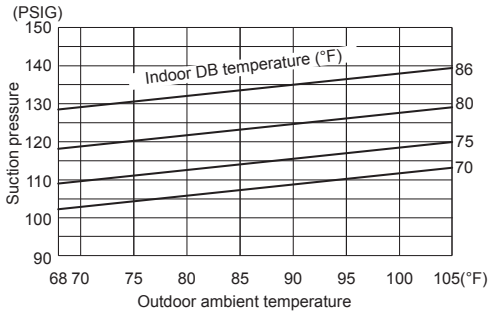

MUZ-D36NA

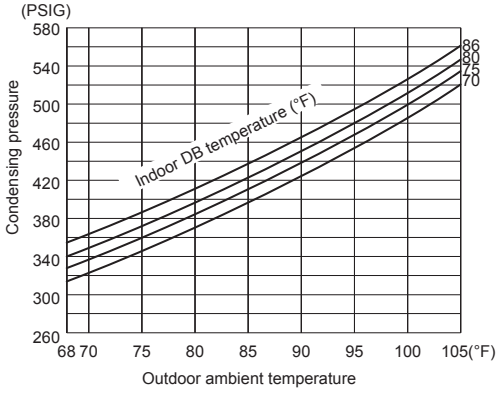

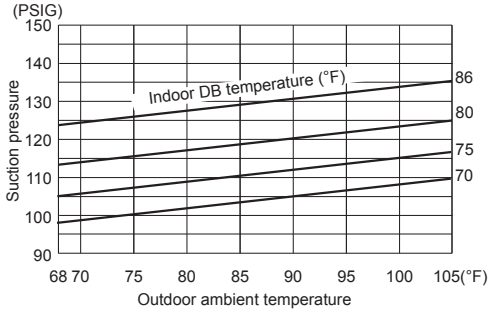

MUY-D30NA

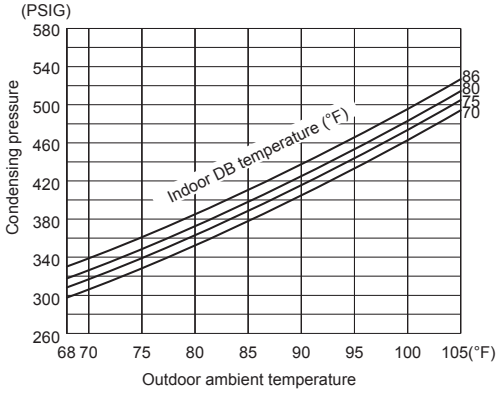

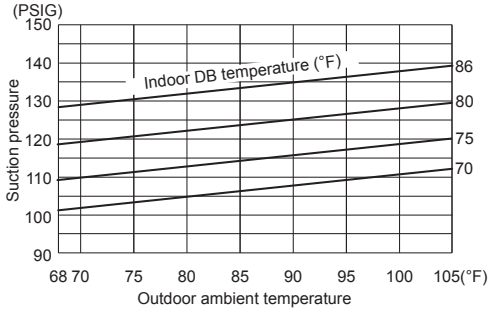

MUY-D36NA

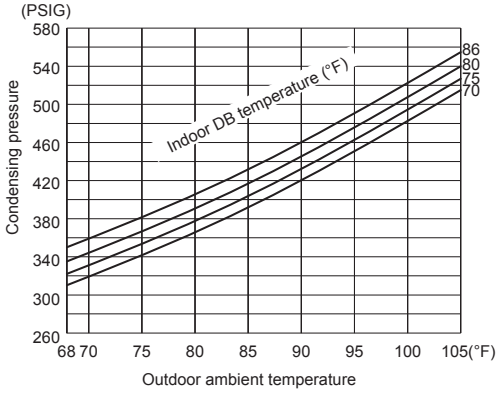

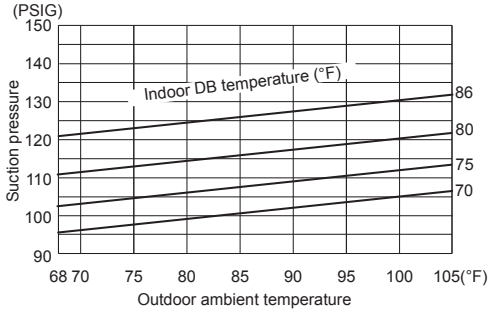

MUFZ-KJ09NAHZ

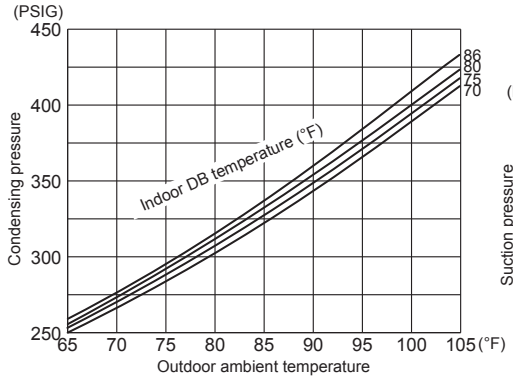

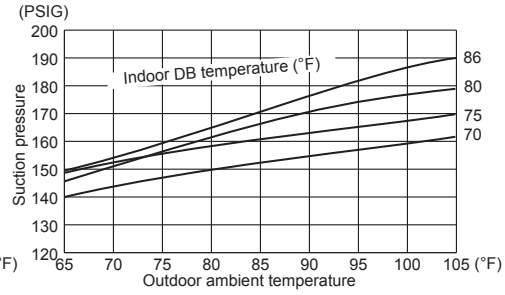

MUFZ-KJ12NAHZ

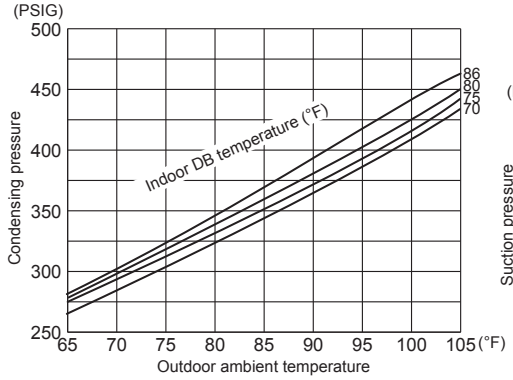

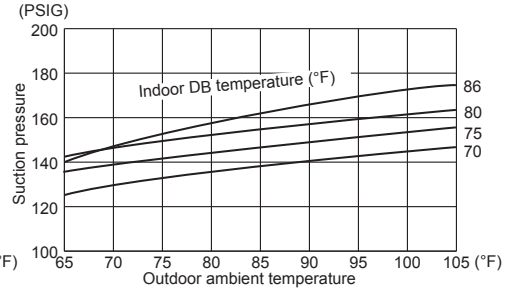

MUFZ-KJ15NAHZ

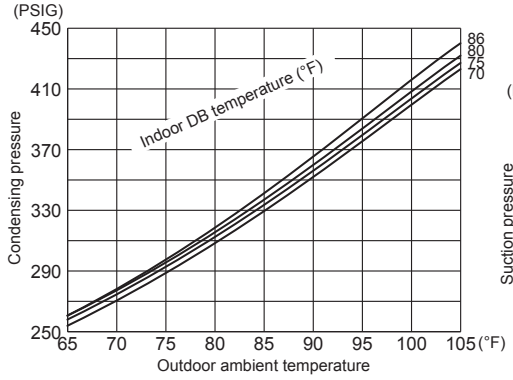

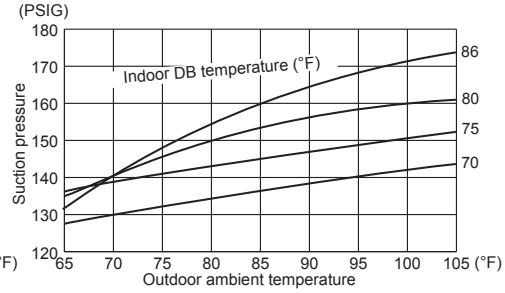

MUFZ-KJ18NAHZ

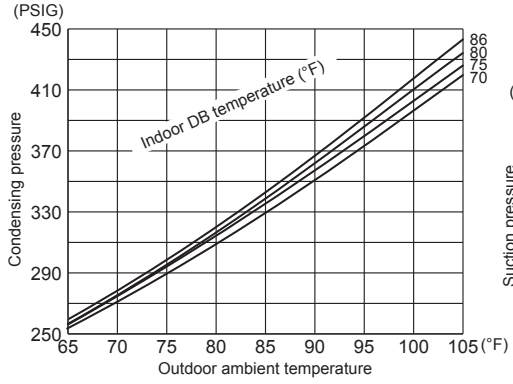

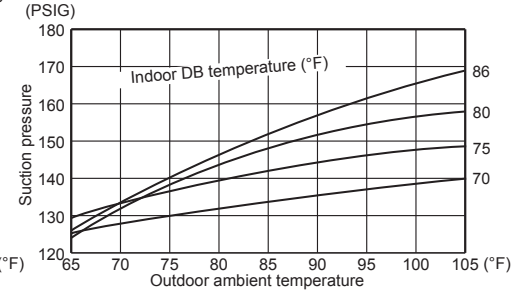

Heating

Data is based on the condition of outdoor humidity 75%.
Air flow should be set to High speed.
Data is for heating operation without any frost.

MUZ-GL09NA - U1 MUZ-GL09NAH - U1

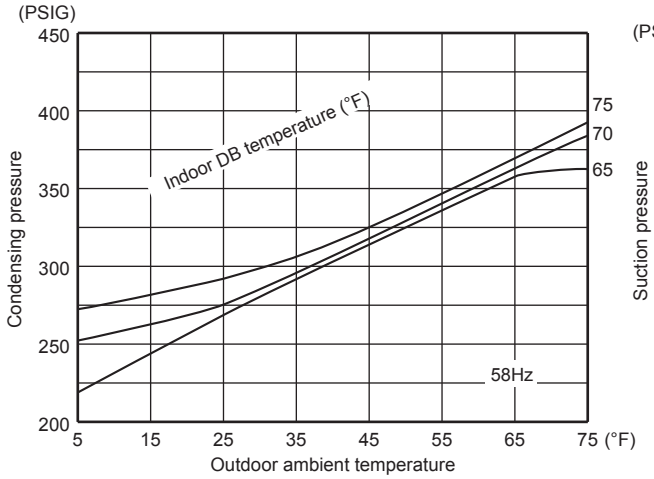

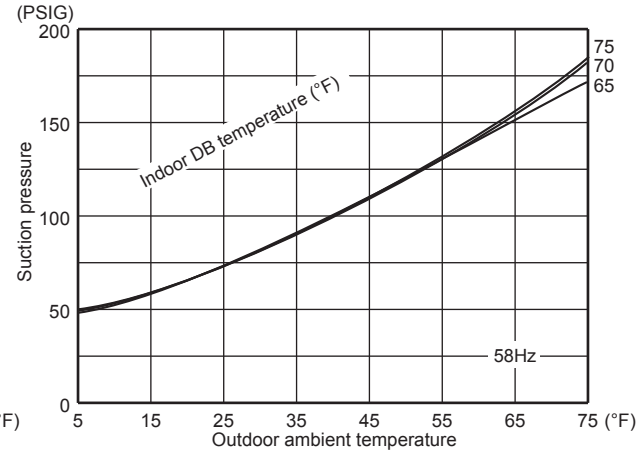

MUZ-GL09NA - U8 MUZ-GL09NAH - U8 MUZ-GL12NA MUZ-GL12NAH

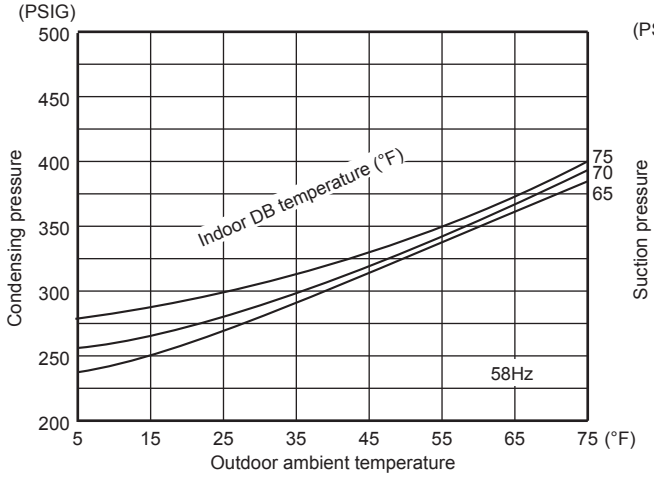

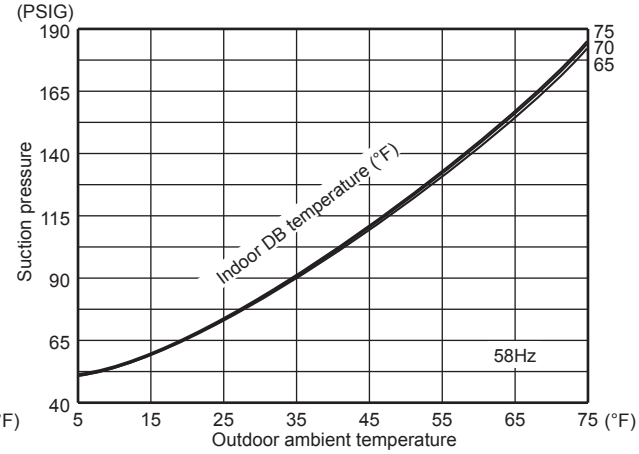

MUZ-GL15NA MUZ-GL15NAH

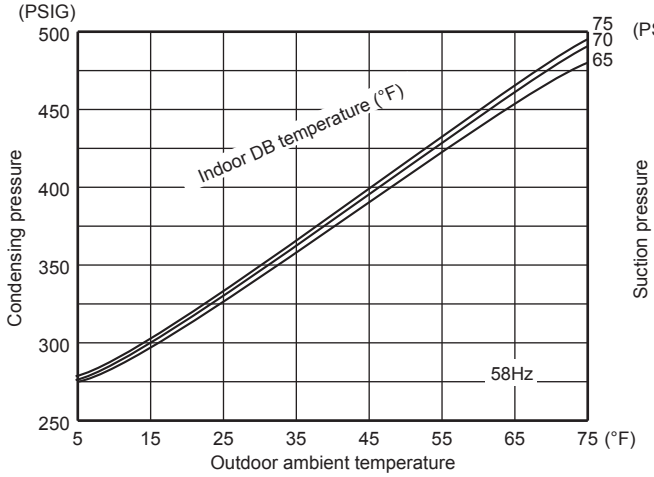

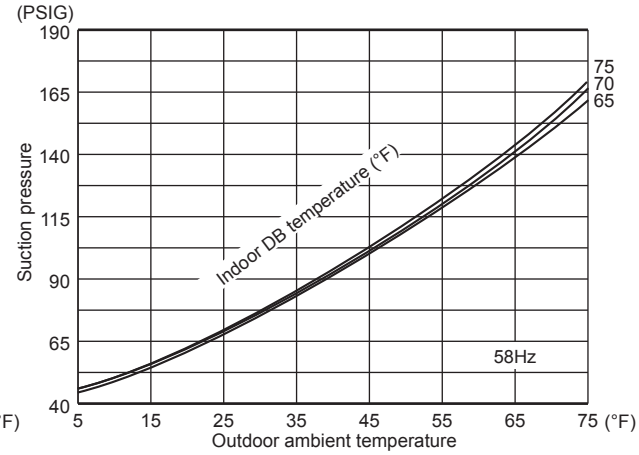

MUZ-GL18NA MUZ-GL18NAH

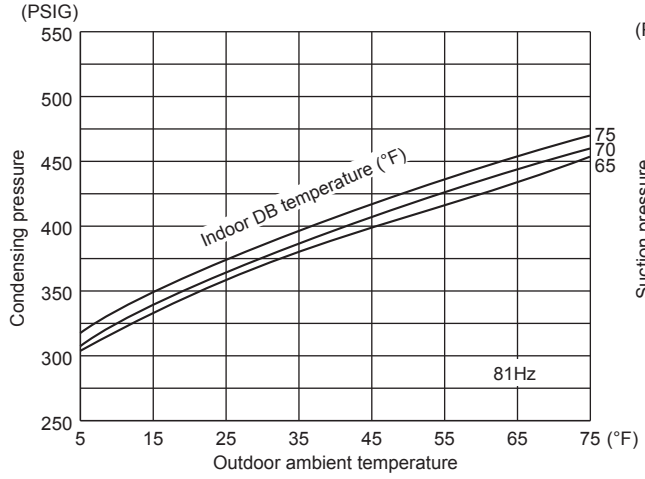

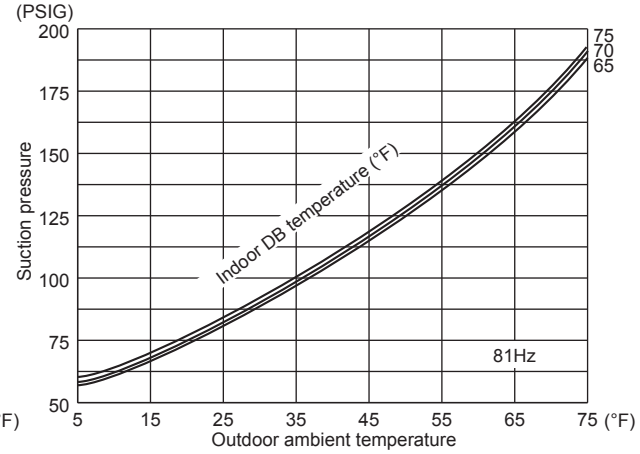

MUZ-GL24NA MUZ-GL24NAH

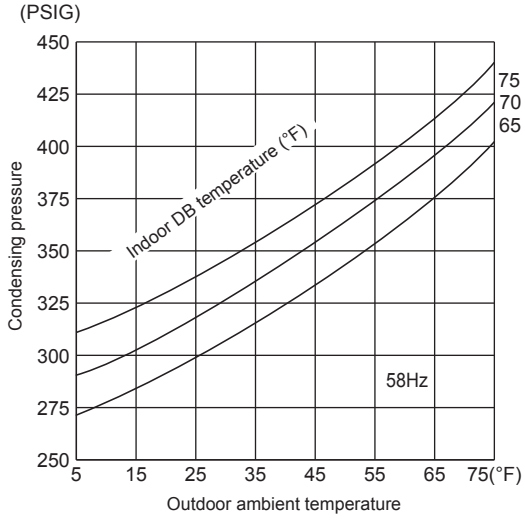

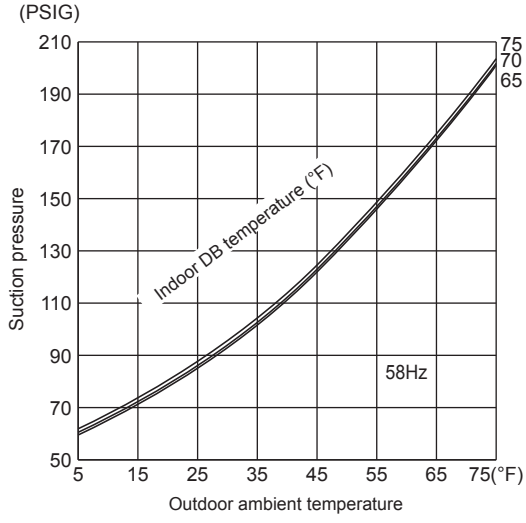

MUZ-HM09NA MUZ-HM12NA - U1

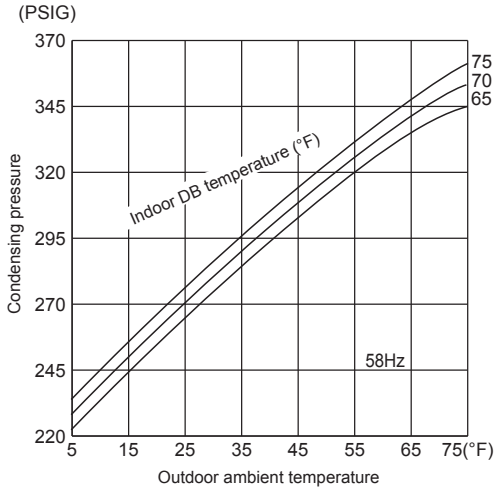

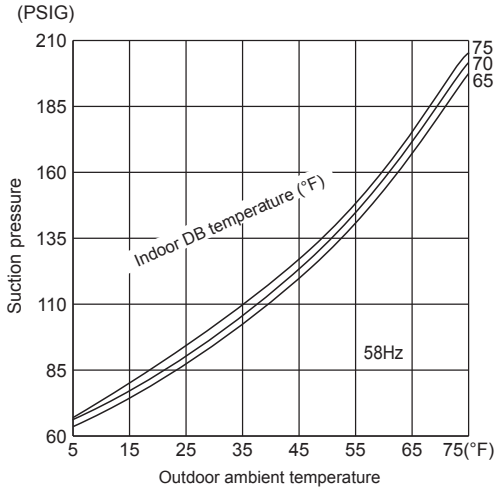

MUZ-HM12NA - U8

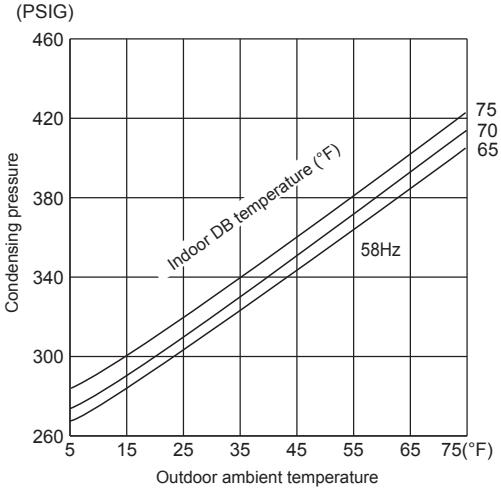

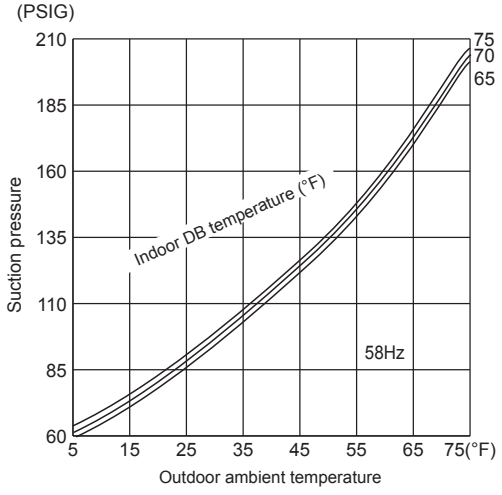

MUZ-HM15NA

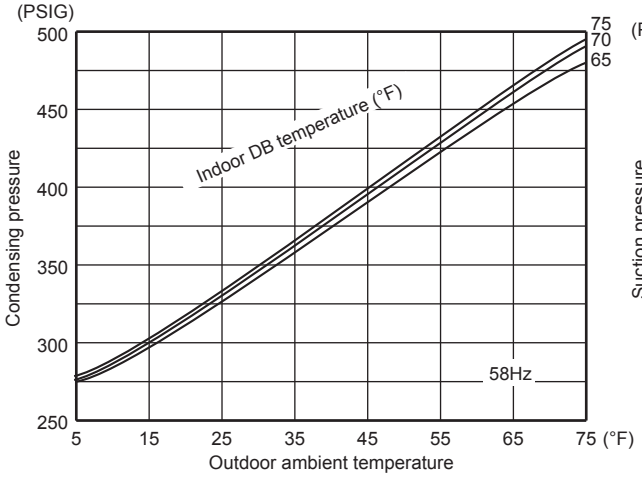

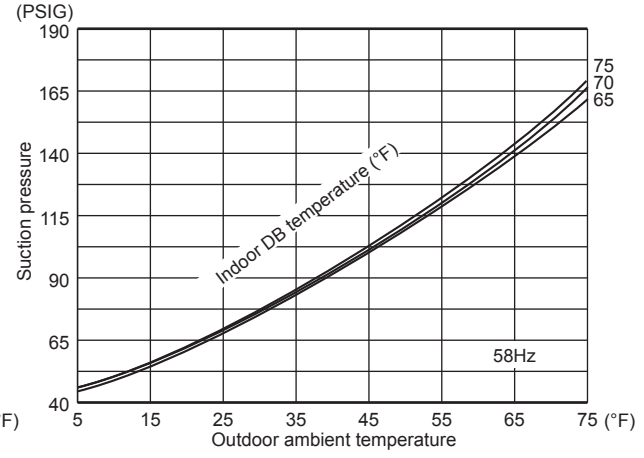

MUZ-HM18NA

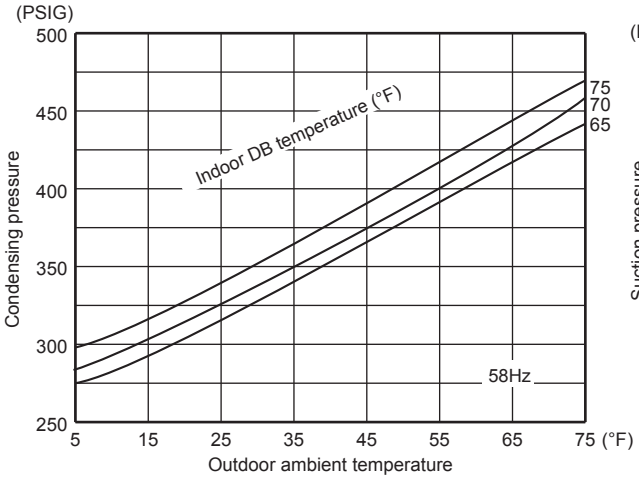

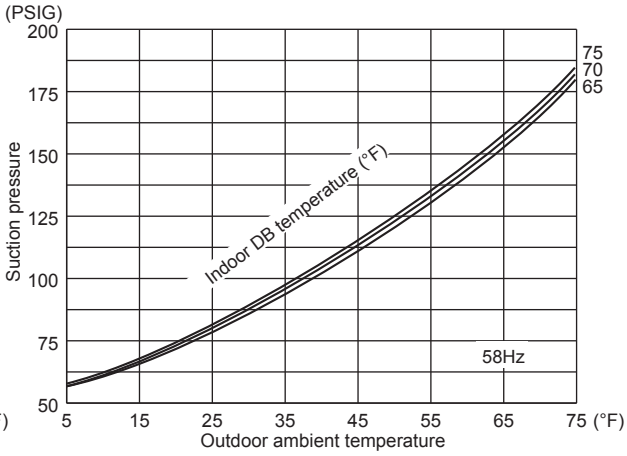

MUZ-HM24NA

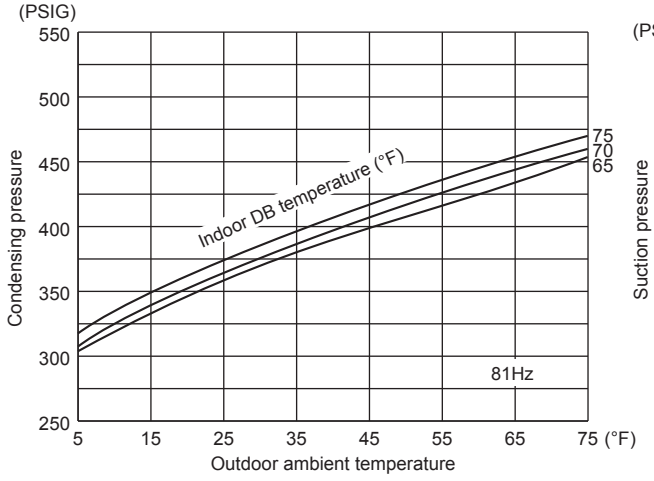

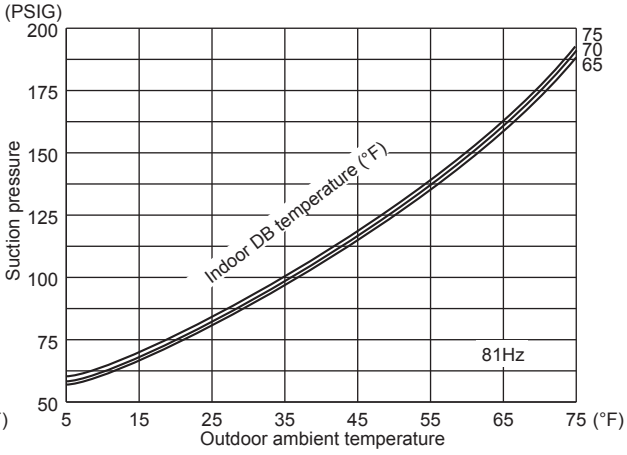

MUZ-FH06NA MUZ-FH06NAH

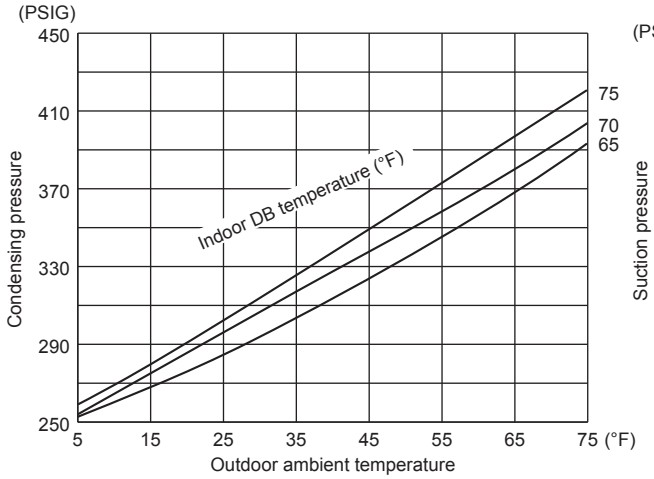

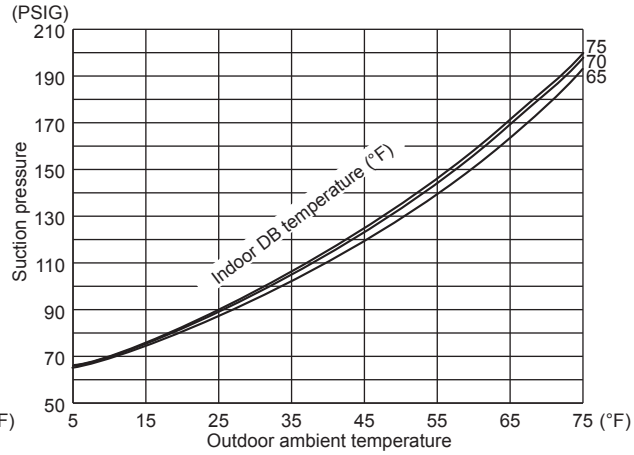

MUZ-FH09NA MUZ-FH09NAH

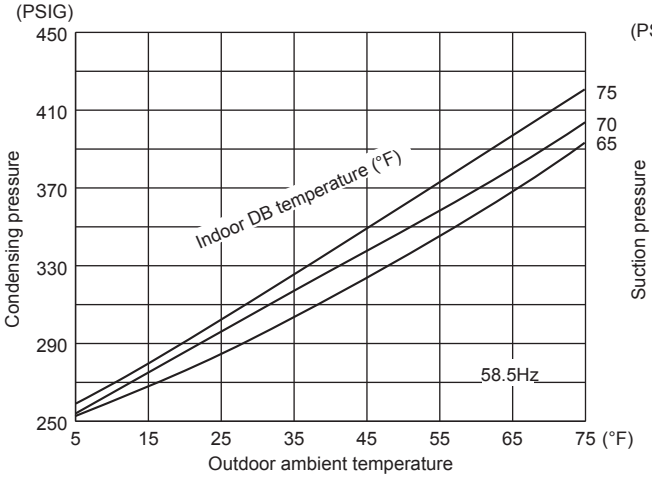

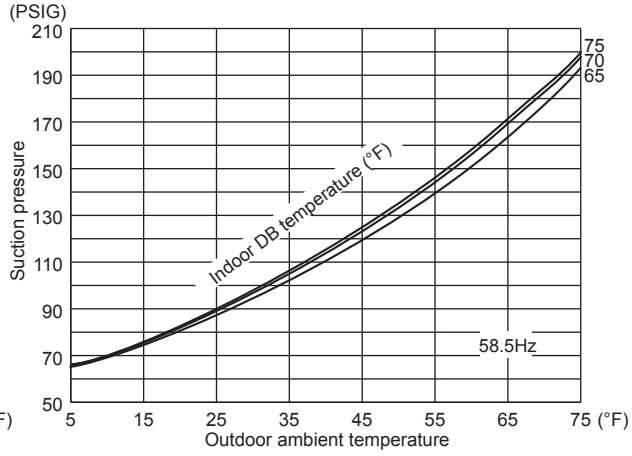

MUZ-FH12NA MUZ-FH12NAH

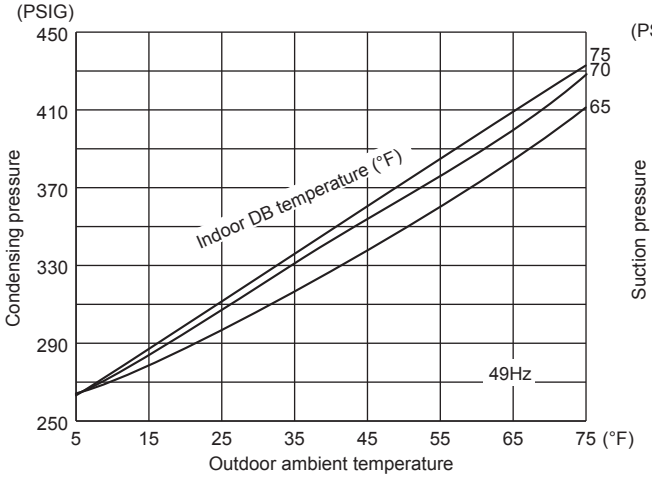

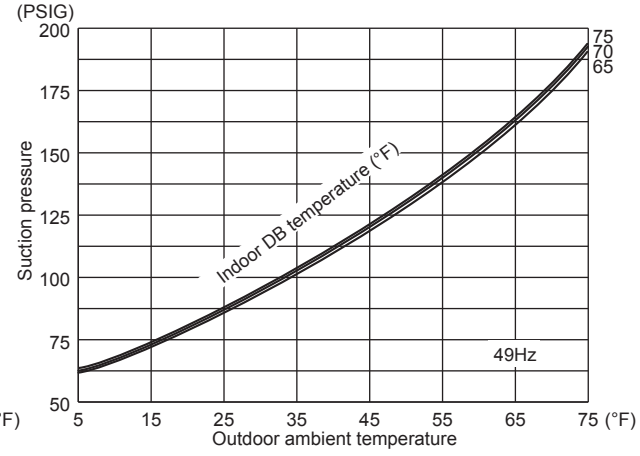

MUZ-FH15NA MUZ-FH15NAH

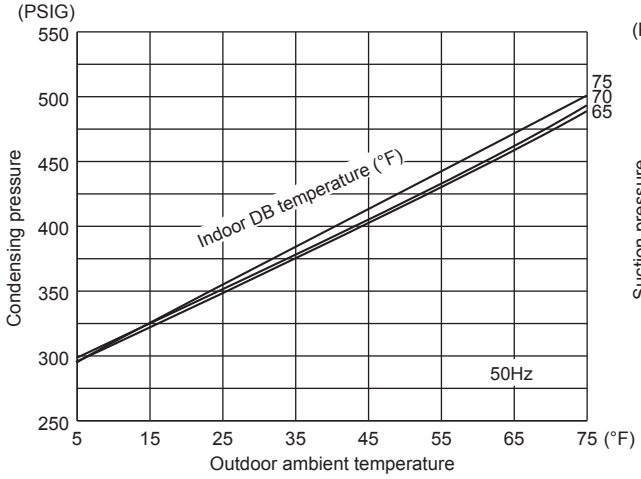

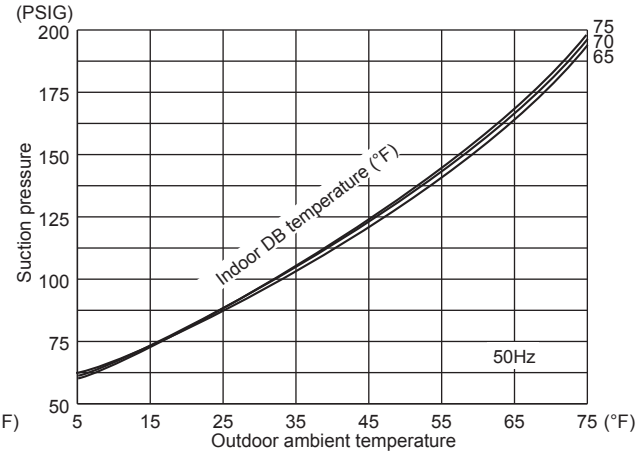

MUZ-FH18NA2 MUZ-FH18NAH2

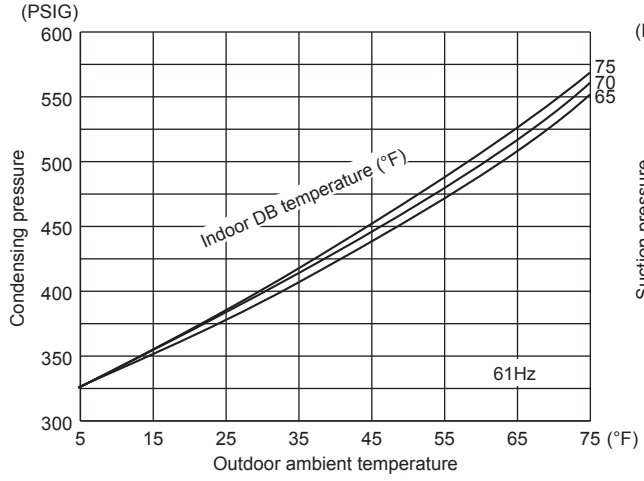

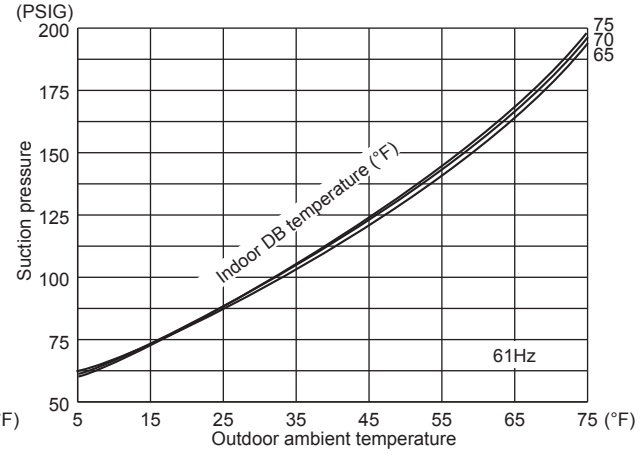

MUZ-FE09NAH

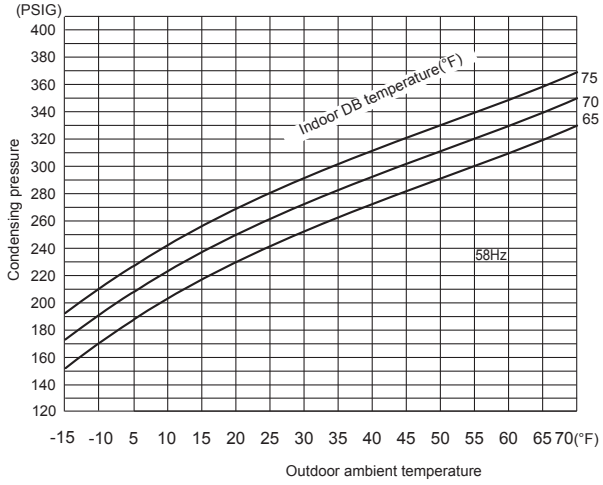

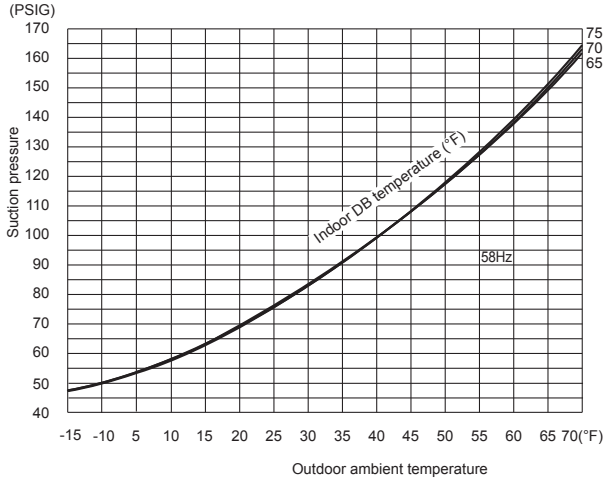

MUZ-FE12NAH

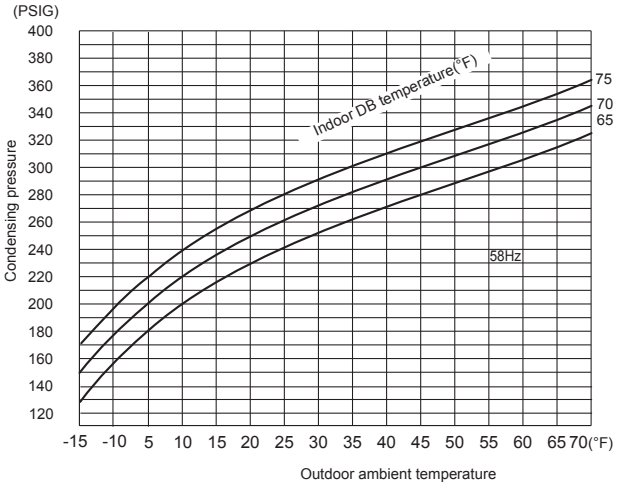

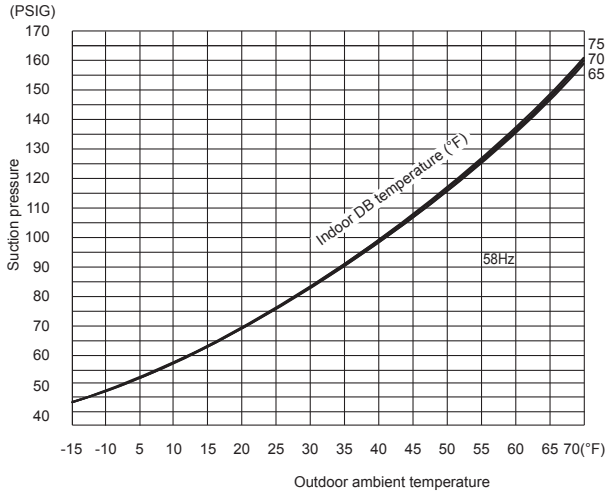

MUZ-D30NA

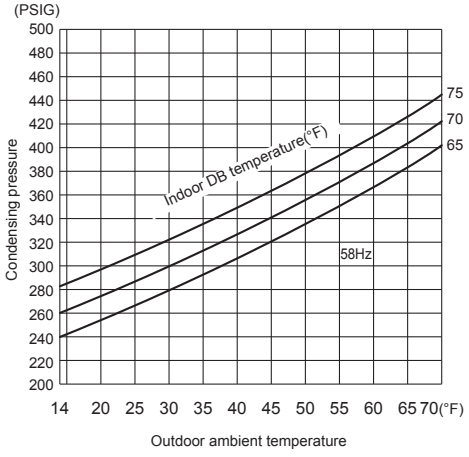

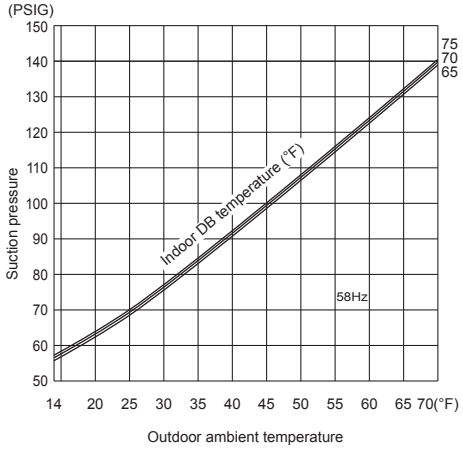

MUZ-D36NA

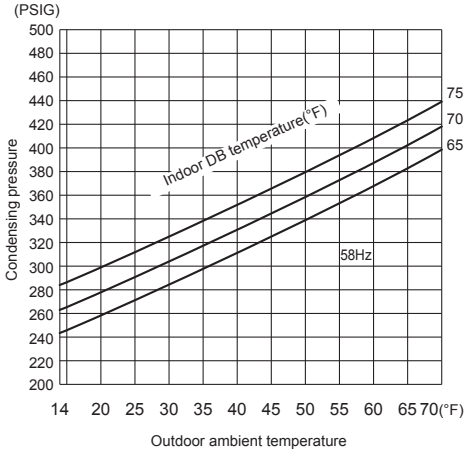

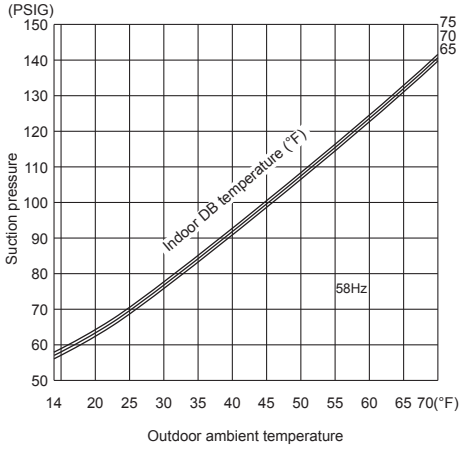

MUFZ-KJ09NAHZ

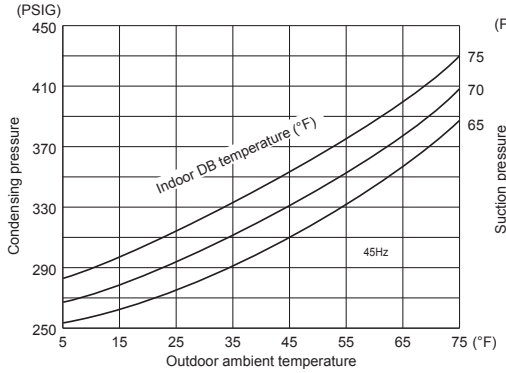

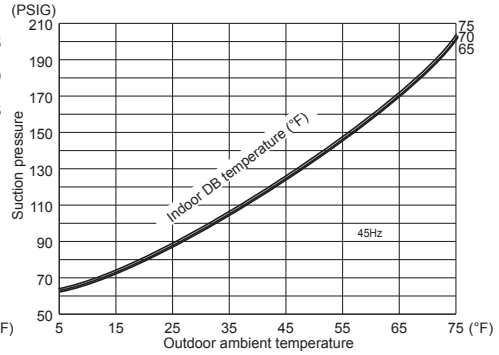

MUFZ-KJ12NAHZ

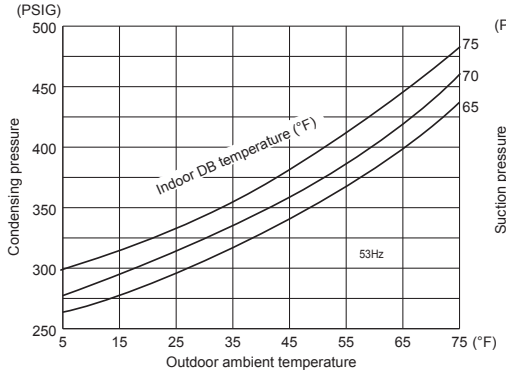

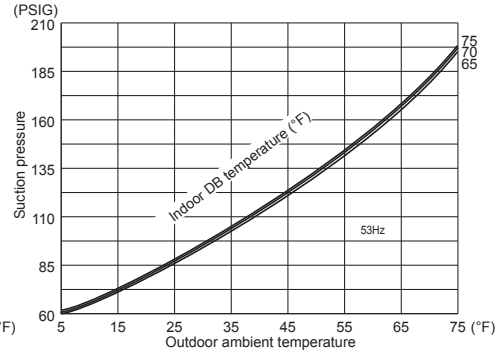

MUFZ-KJ15NAHZ

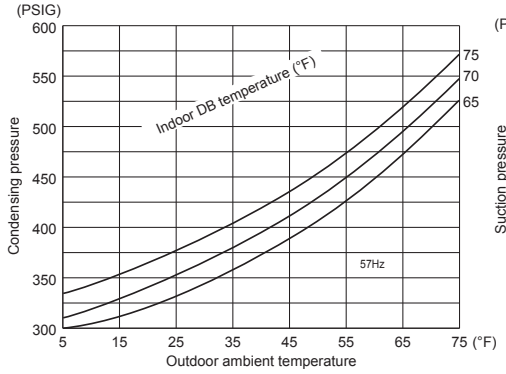

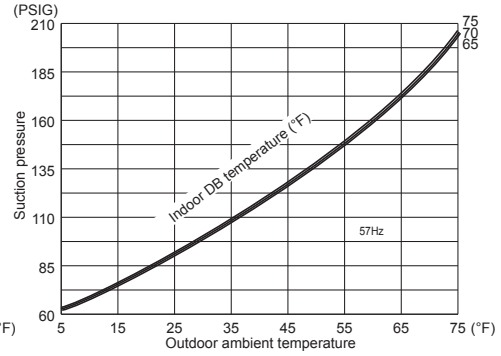

MUFZ-KJ18NAHZ

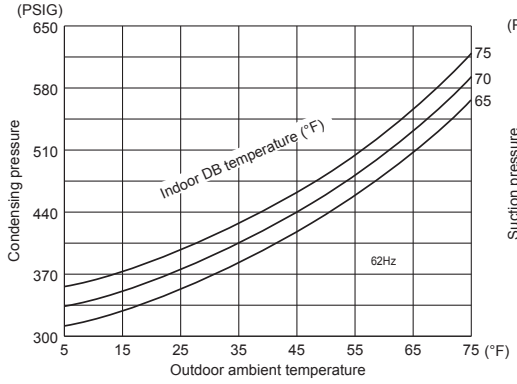

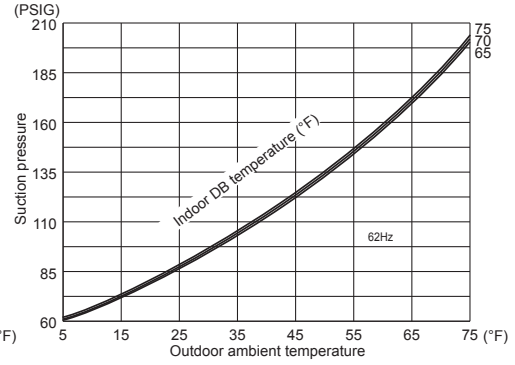

8-4. STANDARD OPERATION DATA

Model				MS-A09WA	MS-A12WA
Item			Unit	Cooling	Cooling
Total	Capacity		Btu / h	9500	12000
	SHF		—	0.68	0.70
	Input		kW	0.87	1.07
Electrical circuit	INDOOR UNIT MODEL			**MS-A09WA**	**MS-A12WA**
	Power supply (V, phase, Hz)			115, 1, 60	115, 1, 60
	Input		kW	0.019	0.035
	Fan motor current		A	0.27	0.51
	OUTDOOR UNIT MODEL			**MU-A09WA**	**MU-A12WA**
	Power supply (V, phase, Hz)			115, 1, 60	115, 1, 60
	Input		kW	0.851	1.035
	Comp. current		A	6.74	7.96
	Fan motor current		A	0.63	0.93
Refrigerant circuit	Condensing pressure		PSIG	372	375
	Suction pressure		PSIG	144	150
	Discharge temperature		°F	154	149
	Condensing temperature		°F	110	111
	Suction temperature		°F	48	50
	Comp. shell bottom temp		°F	146	139
	Ref. pipe length		ft.	25	25
	Refrigerant charge (R410A)		—	2lb. 5oz.	3lb. 1oz.
Indoor unit	Intake air temperature	DB	°F	80	80
		WB	°F	67	67
	Discharge air temperature	DB	°F	57	59
		WB	°F	56	58
	Fan speed (High)		rpm	1160	1220
	Airflow (High)		CFM	300 (Wet)	363 (Wet)
Outdoor unit	Intake air temperature	DB	°F	95	95
		WB	°F	—	—
	Fan speed		rpm	830	830
	Airflow		CFM	1083	1327

Model				MSZ-GL09NA - U1		MSZ-GL09NA - U1		MSY-GL09NA
Item			Unit	Cooling	Heating	Cooling	Heating	Cooling
Total	Capacity		Btu/h	9,000	10,900	9,000	10,900	9,000
	SHF		—	0.82	—	0.82	—	0.82
	Input		kW	0.585	0.72	0.585	0.72	0.585
	Rated frequency		Hz	59	73	48	59	59.5
Electrical circuit	Indoor unit			MSZ-GL09NA		MSZ-GL09NA		MSY-GL09NA
	Power supply		V, phase, Hz	208/230, 1, 60				
	Input		kW	0.022	0.023	0.022	0.023	0.022
	Fan motor current		A	0.24/0.22	0.25/0.23	0.24/0.22	0.25/0.23	0.24/0.22
	Outdoor unit			MUZ-GL09NA - U1 MUZ-GL09NAH - U1		MUZ-GL09NA - U8 MUZ-GL09NAH - U8		MUY-GL09NA
	Power supply		V, phase, Hz	208/230, 1, 60				
	Input		kW	0.563	0.697	0.563	0.697	0.563
	Comp. current		A	2.67/2.41	3.25/2.94	2.45/2.21	3.05/2.76	2.63/2.37
	Fan motor current		A	0.36/0.33	0.34/0.31	0.36/0.33	0.34/0.31	0.36/0.33
Refrigerant circuit	Condensing pressure		PSIG	357	345	358	349	358
	Suction pressure		PSIG	151	107	149	108	149
	Discharge temperature		˚F	146	156	148	155	154
	Condensing temperature		˚F	108	102	108	104	108
	Suction temperature		˚F	61	44	63	44	66
	Comp. shell bottom temperature		˚F	144	154	140	144	152
	Ref. pipe length		ft.	25				
	Refrigerant charge (R410A)			2 lb 5 oz.		2 lb 9 oz.		
Indoor unit	Intake air temperature	DB	˚F	80	70	80	70	80
		WB	˚F	67	60	67	60	67
	Discharge air temperature	DB	˚F	59	99	59	99	59
		WB	˚F	56	—	56	—	56
	Fan speed (High)		rpm	1,020	1,040	1,020	1,040	1,020
	Airflow (High)		CFM	367 (Wet)	413	367 (Wet)	413	367 (Wet)
Outdoor unit	Intake air temperature	DB	˚F	95	47	95	47	95
		WB	˚F	—	—	—	—	—
	Fan speed		rpm	900	860	900	860	900
	Airflow		CFM	1,229	1,172	1,229	1,172	1,229

Model				MSZ-GL12NA MSY-GL12NA		MSZ-GL15NA MSY-GL15NA	
Item			Unit	Cooling	Heating	Cooling	Heating
Total	Capacity		Btu/h	12,000	14,400	14,000	18,000
	SHF		—	0.77	—	0.78	—
	Input		kW	0.920	1.10	1.080	1.60
	Rated frequency		Hz	70	77	56.5	74
Electrical circuit	Indoor unit			MSZ-GL12NA MSY-GL12NA		MSZ-GL15NA MSY-GL15NA	
	Power supply		V, phase, Hz	208/230, 1, 60			
	Input		kW	0.022	0.023	0.043	0.030
	Fan motor current		A	0.24/0.22	0.25/0.23	0.43/0.39	0.34/0.31
	Outdoor unit			MUZ-GL12NA MUZ-GL12NAH MUY-GL12NA		MUZ-GL15NA MUZ-GL15NAH MUY-GL15NA	
	Power supply		V, phase, Hz	208/230, 1, 60			
	Input		kW	0.898	1.077	1.037	1.570
	Comp. current		A	4.01/3.62	4.86/4.39	4.51/4.08	7.11/6.43
	Fan motor current		A	0.41/0.37	0.40/0.36	0.41/0.37	0.40/0.36
Refrigerant circuit	Condensing pressure		PSIG	380	402	396	427
	Suction pressure		PSIG	133	106	138	98
	Discharge temperature		˚F	166	167	168	178
	Condensing temperature		˚F	112	115	115	120
	Suction temperature		˚F	60	35	61	31
	Comp. shell bottom temperature		˚F	152	150	152	158
	Ref. pipe length		ft.	25			
	Refrigerant charge (R410A)			2 lb 9 oz.			
Indoor unit	Intake air temperature	DB	˚F	80	70	80	70
		WB	˚F	67	60	67	60
	Discharge air temperature	DB	˚F	57	110	58	114
		WB	˚F	55	—	56	—
	Fan speed (High)		rpm	1,020	1,040	1,280	1,140
	Airflow (High)		CFM	367 (Wet)	413	498 (Wet)	463
Outdoor unit	Intake air temperature	DB	˚F	95	47	95	47
		WB	˚F	—	43	—	43
	Fan speed		rpm	900	860	910	900
	Airflow		CFM	1,229	1,172	1,243	1,229

Model				MSZ-GL18NA MSY-GL18NA		MSZ-GL24NA MSY-GL24NA	
Item			Unit	Cooling	Heating	Cooling	Heating
Total	Capacity		Btu/h	18,000	21,600	22,500	27,600
	SHF		—	0.87	—	0.75	—
	Input		kW	1.34	1.68	1.80	2.34
	Rated frequency		Hz	69	81	67.5	82.0
Electrical circuit	Indoor unit			MSZ-GL18NA MSY-GL18NA		MSZ-GL24NA MSY-GL24NA	
	Power supply		V, phase, Hz	208/230, 1, 60			
	Input		kW	0.045		0.058	
	Fan motor current		A	0.46/0.42		0.56/0.51	
	Outdoor unit			MUZ-GL18NA MUZ-GL18NAH MUY-GL18NA		MUZ-GL24NA MUZ-GL24NAH MUY-GL24NA	
	Power supply		V, phase, Hz	208/230, 1, 60			
	Input		kW	1.295	1.635	1.742	2.282
	Comp. current		A	5.01/4.53	6.67/6.03	7.01/6.34	9.59/8.67
	Fan motor current		A	1.05/0.95	1.05/0.95	1.16/1.05	1.13/1.02
Refrigerant circuit	Condensing pressure		PSIG	377	391	395	405
	Suction pressure		PSIG	144	103	141	102
	Discharge temperature		˚F	149	178	158	171
	Condensing temperature		˚F	111	111	115	115
	Suction temperature		˚F	51	43	52	33
	Comp. shell bottom temperature		˚F	134	160	140	148
	Ref. pipe length		ft.	25			
	Refrigerant charge (R410A)			3 lb 9 oz.		4 lb 3 oz.	
Indoor unit	Intake air temperature	DB	˚F	80	70	80	70
		WB	˚F	67	60	67	60
	Discharge air temperature	DB	˚F	52	111	56	111
		WB	˚F	51	—	53	—
	Fan speed (High)		rpm	1,170	1,170	1,300	1,300
	Airflow (High)		CFM	581 (Wet)	646	634 (Wet)	738
Outdoor unit	Intake air temperature	DB	˚F	95	47	95	47
		WB	˚F	—	43	—	43
	Fan speed		rpm	810	810	840	810
	Airflow		CFM	1,691	1,691	1,769	1,701

Model				MSZ-HM09NA - U1		MSZ-HM09NA - U1	
Item			Unit	Cooling	Heating	Cooling	Heating
Total	Capacity		Btu/h	9,000	10,900	9,000	10,900
	SHF		—	0.82	—	0.82	—
	Input		kW	0.750	0.900	0.750	0.900
	Rated frequency		Hz	59.5	79.0	59.5	77.5
Electrical circuit	Indoor unit			**MSZ-HM09NA**		**MSZ-HM09NA**	
	Power supply		V, phase, Hz	208/230, 1, 60			
	Input		kW	0.022	0.023	0.022	0.023
	Fan motor current		A	0.24/0.22	0.25/0.23	0.24/0.22	0.25/0.23
	Outdoor unit			**MUZ-HM09NA - U1**		**MUZ-HM09NA - U8**	
	Power supply		V, phase, Hz	208/230, 1, 60			
	Input		kW	0.728	0.877	0.728	0.877
	Comp. current		A	3.64/3.29	4.25/3.85	3.32/3.00	3.66/3.31
	Fan motor current		A	0.27/0.24	0.30/0.27	0.27/0.24	0.30/0.27
Refrigerant circuit	Condensing pressure		PSIG	384	331	389	331
	Suction pressure		PSIG	152	102	151	103
	Discharge temperature		˚F	151	155	154	152
	Condensing temperature		˚F	113	101	115	103
	Suction temperature		˚F	58	41	59	39
	Comp. shell bottom temperature		˚F	146	149	151	149
	Ref. pipe length		ft.	25			
	Refrigerant charge (R410A)			1 lb. 12 oz.			
Indoor unit	Intake air temperature	DB	˚F	80	70	80	70
		WB	˚F	67	60	67	60
	Discharge air temperature	DB	˚F	60	97	60	97
		WB	˚F	58	—	58	—
	Fan speed (High)		rpm	1,020	1,040	1,020	1,040
	Airflow (High)		CFM	367 (Wet)	413	367 (Wet)	413
Outdoor unit	Intake air temperature	DB	˚F	95	47	95	47
		WB	˚F	—	43	—	43
	Fan speed		rpm	800	850	800	850
	Airflow		CFM	1151	1225	1151	1225

Model				MSZ-HM12NA - U1		MSZ-HM12NA - U1	
Item			Unit	Cooling	Heating	Cooling	Heating
Total	Capacity		Btu/h	12,000	12,200	12,000	14,400
	SHF		—	0.77	—	0.77	—
	Input		kW	1.210	0.990	1.210	0.990
	Rated frequency		Hz	89.0	90.0	69.0	77.0
Electrical circuit	Indoor unit			MSZ-HM12NA		MSZ-HM12NA	
	Power supply		V, phase, Hz	208/230, 1, 60			
	Input		kW	0.022	0.023	0.022	0.023
	Fan motor current		A	0.24/0.22	0.25/0.23	0.24/0.22	0.25/0.23
	Outdoor unit			MUZ-HM12NA - U1		MUZ-HM12NA - U8	
	Power supply		V, phase, Hz	208/230, 1, 60			
	Input		kW	1.188	0.967	1.188	0.967
	Comp. current		A	5.61/5.08	4.56/4.13	4.39/3.97	5.41/4.89
	Fan motor current		A	0.27/0.24	0.30/0.27	0.34/0.31	0.31/0.28
Refrigerant circuit	Condensing pressure		PSIG	429	347	389	397
	Suction pressure		PSIG	135	99	133	104
	Discharge temperature		˚F	180	165	163	162
	Condensing temperature		˚F	120	104	115	116
	Suction temperature		˚F	60	41	56	35
	Comp. shell bottom temperature		˚F	174	157	158	158
	Ref. pipe length		ft.	25			
	Refrigerant charge (R410A)			1 lb. 12 oz.		2 lb. 9 oz.	
Indoor unit	Intake air temperature	DB	˚F	80	70	80	70
		WB	˚F	67	60	67	60
	Discharge air temperature	DB	˚F	56	108	56	108
		WB	˚F	55	—	55	—
	Fan speed (High)		rpm	1,020	1,040	1,020	1,040
	Airflow (High)		CFM	367 (Wet)	413	367 (Wet)	413
Outdoor unit	Intake air temperature	DB	˚F	95	47	95	47
		WB	˚F	—	43	—	43
	Fan speed		rpm	800	850	900	860
	Airflow		CFM	1151	1225	1229	1172

Model				MSZ-HM15NA		MSZ-HM18NA		MSZ-HM24NA	
Item			Unit	Cooling	Heating	Cooling	Heating	Cooling	Heating
Total	Capacity		Btu/h	14,000	18,000	17,200	18,000	22,500	26,000
	SHF		—	0.78	—	0.86	—	0.89	—
	Input		kW	1.17	1.60	1.64	1.59	2.63	2.5
	Rated frequency		Hz	56.5	74	68	74	98	108
Electrical circuit	Indoor unit			**MSZ-HM15NA**		**MSZ-HM18NA**		**MSZ-HM24NA**	
	Power supply		V, phase, Hz	208/230, 1, 60					
	Input		kW	0.043	0.030	0.042	0.042	0.055	
	Fan motor current		A	0.43/0.39	0.34/0.31	0.44/0.40	0.44/0.40	0.55/0.50	
	Outdoor unit			**MUZ-HM15NA**		**MUZ-HM18NA**		**MUZ-HM24NA**	
	Power supply		V, phase, Hz	208/230, 1, 60					
	Input		kW	1.127	1.570	1.598	1.548	2.575	2.445
	Comp. current		A	4.91/4.44	7.11/6.43	7.22/6.53	7.11/6.43	11.11/10.05	10.56/9.55
	Fan motor current		A	0.41/0.37	0.40/0.36	0.41/0.37	0.40/0.36	1.05/0.95	1.05/0.95
Refrigerant circuit	Condensing pressure		PSIG	396	427	423	361	404	403
	Suction pressure		PSIG	138	98	144	99	127	94
	Discharge temperature		˚F	168	178	165	161	174	194
	Condensing temperature		˚F	115	120	120	108	116	116
	Suction temperature		˚F	61	31	54	35	54	44
	Comp. shell bottom temperature		˚F	152	158	149	143	173	192
	Ref. pipe length		ft.	25					
	Refrigerant charge (R410A)			2 lb. 9 oz.		2 lb. 10 oz.		3 lb 9 oz.	
Indoor unit	Intake air temperature	DB	˚F	80	70	80	70	80	70
		WB	˚F	67	60	67	60	67	60
	Discharge air temperature	DB	˚F	58	114	58	114	57	108
		WB	˚F	56	—	56	—	56	—
	Fan speed (High)		rpm	1,280	1,140	1,140	1,140	1,250	1,250
	Airflow (High)		CFM	498 (Wet)	463	562 (Wet)	625	632 (Wet)	702
Outdoor unit	Intake air temperature	DB	˚F	95	47	95	47	95	47
		WB	˚F	—	43	—	43	—	43
	Fan speed		rpm	910	900	910	900	810	810
	Airflow		CFM	1,243	1,229	1,243	1,229	1,691	1,691

Model				MSZ-FH06NA		MSZ-FH09NA		MSZ-FH12NA		MSZ-FH15NA		MSZ-FH18NA2	
Item			Unit	Cooling	Heating	Cooling	Heating	Cooling	Heating	Cooling	Heating	Cooling	Heating
Total	Capacity		Btu/h	6,000	8,700	9,000	10,900	12,000	13,600	15,000	18,000	17,200	20,300
	SHF		—	0.96	—	0.92	—	0.83	—	0.70	—	0.69	—
	Input		kW	0.315	0.545	0.560	0.710	0.870	0.950	1.200	1.300	1.375	1.72
	Rated frequency		Hz	28	50	47	58.5	46	49	50.5	50	57.0	61
Electrical circuit	Indoor unit			**MSZ-FH06NA**		**MSZ-FH09NA**		**MSZ-FH12NA**		**MSZ-FH15NA**		**MSZ-FH18NA2**	
	Power supply		V, phase, Hz	208/230, 1, 60									
	Input		kW	0.029		0.029		0.029		0.031		0.033	
	Fan motor current		A	0.30/0.27		0.30/0.27		0.30/0.27		0.31/0.28		0.34/0.31	
	Outdoor unit			**MUZ-FH06NA MUZ-FH06NAH**		**MUZ-FH09NA MUZ-FH09NAH**		**MUZ-FH12NA MUZ-FH12NAH**		**MUZ-FH15NA MUZ-FH15NAH**		**MUZ-FH18NA2 MUZ-FH18NAH2**	
	Power supply		V, phase, Hz	208/230, 1, 60									
	Input		kW	0.243	0.475	0.531	0.681	0.841	0.921	1.169	1.269	1.342	1.687
	Comp. current		A	1.22/1.10	2.23/2.02	2.32/2.10	3.01/2.72	3.60/3.26	4.06/3.67	4.46/4.03	4.87/4.40	5.53/5.00	7.04/6.37
	Fan motor current		A	0.36/0.33	0.34/0.31	0.36/0.33	0.34/0.31	0.41/0.37	0.40/0.36	1.21/1.09	1.24/1.12	1.21/1.09	1.24/1.12
Refrigerant circuit	Condensing pressure		PSIG	332	297	352	323	374	340	361	391	367	445
	Suction pressure		PSIG	174	112	153	110	135	106	131	108	128	107
	Discharge temperature		˚F	136	140	148	145	156	148	152	170	164	189
	Condensing temperature		˚F	104	96	107	101	112	105	109	115	109	123
	Suction temperature		˚F	69	44	64	41	56	36	52	45	59	34
	Comp. shell bottom temperature		˚F	120	120	129	125	137	128	135	147	154	167
	Ref. pipe length		ft.	25									
	Refrigerant charge (R410A)			2 lb. 9 oz.						3 lb 7 oz.			
Indoor unit	Intake air temperature	DB	˚F	80	70	80	70	80	70	80	70	80	70
		WB	˚F	67	60	67	60	67	60	67	60	67	60
	Discharge air temperature	DB	˚F	64	94	58	99	56	101	52	111	52	119
		WB	˚F	60	—	55	—	54	—	51	—	51	—
	Fan speed (High)		rpm	1,150	1,280	1,150	1,280	1,190	1,320	1,220	1,420	1,330	1,460
	Airflow (High)		CFM	328 (Wet)	437	328 (Wet)	437	342 (Wet)	454	354 (Wet)	497	395 (Wet)	514
Outdoor unit	Intake air temperature	DB	˚F	95	47	95	47	95	47	95	47	95	47
		WB	˚F	—	43	—	43	—	43	—	43	—	43
	Fan speed		rpm	810	900	810	900	810	900	840	810	840	810
	Airflow		CFM	1,074	1,202	1,074	1,202	1,074	1,202	1,692	1,634	1,692	1,634

Model				MSZ-FE09NA		MSZ-FE12NA	
Item			Unit	Cooling	Heating	Cooling	Heating
Total	Capacity		Btu/h	9,000	10,900	12,000	13,600
	SHF		—	0.76	—	0.73	—
	Input		kW	0.580	0.710	0.930	0.950
	Rated frequency		Hz	34	42	51	52.5
Electrical circuit	Indoor unit			**MSZ-FE09NA**		**MSZ-FE12NA**	
	Power supply		V, phase, Hz	208/230, 1, 60			
	Input		kW	0.018	0.024	0.024	0.030
	Fan motor current		A	0.19/0.17	0.25/0.23	0.25/0.23	0.32/0.29
	Outdoor unit			**MUZ-FE09NAH**		**MUZ-FE12NAH**	
	Power supply		V, phase, Hz	208/230, 1, 60			
	Input		kW	0.562	0.686	0.906	0.920
	Comp. current		A	2.38/2.15	2.98/2.70	4.05/3.66	4.12/3.72
	Fan motor current		A	0.35/0.32			
Refrigerant circuit	Condensing pressure		PSIG	376	355	402	392
	Suction pressure		PSIG	154	108	148	104
	Discharge temperature		˚F	142	145	160	158
	Condensing temperature		˚F	112	108	117	115
	Suction temperature		˚F	53	36	53	34
	Comp. shell bottom temperature		˚F	144	128	146	129
	Ref. pipe length		ft.	25			
	Refrigerant charge (R410A)			2 lb. 9 oz.			
Indoor unit	Intake air temperature	DB	˚F	80	70	80	70
		WB	˚F	67	60	67	60
	Discharge air temperature	DB	˚F	59	99	58	101
		WB	˚F	56	—	55	—
	Fan speed (High)		rpm	1,020	1,120	1,120	1,220
	Airflow (High)		CFM	307 (Wet)	381	350 (Wet)	420
Outdoor unit	Intake air temperature	DB	˚F	95	47	95	47
		WB	˚F	—	43	—	43
	Fan speed		rpm	810	870	810	870
	Airflow		CFM	1,102	1,187	1,102	1,187

Model				MSZ-D30NA		MSZ-D36NA		MSY-D30NA	MSY-D36NA
Item			Unit	Cooling	Heating	Cooling	Heating	Cooling	Cooling
Total	Capacity		Btu/h	30,700	32,600	32,000/33,200	35,200	30,700	33,200/34,000
	SHF		—	0.64	—	0.62	—	0.64	0.62
	Input		kW	3.85	3.36	4.14/4.36	3.84	3.38	4.21/4.24
	Rated frequency		Hz	84	84	91	91	79	92
Electrical circuit	Indoor unit			**MSZ-D30NA**		**MSZ-D36NA**		**MSY-D30NA**	**MSY-D36NA**
	Power supply		V, phase, Hz	208/230 , 1 , 60					
	Input		kW	0.058					
	Fan motor current		A	0.45/0.42					
	Outdoor unit			**MUZ-D30NA**		**MUZ-D36NA**		**MUY-D30NA**	**MUY-D36NA**
	Power supply		V, phase, Hz	208/230 , 1 , 60					
	Input		kW	3.792	3.302	4.082/4.302	3.782	3.322	4.152/4.182
	Comp. current		A	17.25/15.56	14.95/13.46	18.65/17.86	17.25/15.56	15.05/13.56	18.95/17.26
	Fan motor current		A	0.80/0.72					
Refrigerant circuit	Condensing pressure		PSIG	468	404	480	420	453	475
	Suction pressure		PSIG	126	96	122	94	125	119
	Discharge temperature		˚F	186.8	169.7	198.7	168.8	191.3	197.1
	Condensing temperature		˚F	126.5	114.3	128.5	117.0	123.8	127.4
	Suction temperature		˚F	45.5	29.8	48.0	29.1	54.7	48.6
	Comp. shell bottom temperature		˚F	175.6	156.4	187.0	155.7	177.4	182.7
	Ref. pipe length		ft.	25					
	Refrigerant charge (R410A)		—	4 lb. 10 oz.				4 lb.	
Indoor unit	Intake air temperature	DB	˚F	80	70	80	70	80	80
		WB	˚F	67	60	67	60	67	67
	Discharge air temperature	DB	˚F	53.9	112.2	53	114.9	53.7	51.7
		WB	˚F	53	73.9	52.1	74.6	52.8	50.8
	Fan speed (High)		rpm	1,100					
	Airflow (High)		CFM	741 (Wet)	795	738 (Wet)	794	718 (Wet)	710 (Wet)
Outdoor unit	Intake air temperature	DB	˚F	95	47	95	47	95	95
		WB	˚F	—	43	—	43	—	—
	Fan speed		rpm	800					
	Airflow		CFM	1,941					

Representative matching				SEZ-KD09NA4		SEZ-KD12NA4		SEZ-KD15NA4		SEZ-KD18NA4	
Item			Unit	Cooling	Heating	Cooling	Heating	Cooling	Heating	Cooling	Heating
Total	Capacity		BTU/h	8,100	10,900	11,500	13,600	14,100	18,000	17,200	21,600
	SHF		-	0.80	—	0.76	—	0.80	—	0.79	—
	Input		kW	0.670	1.020	0.920	1.140	1.170	1.500	1.380	1.700
Electrical circuit	Indoor unit			**SEZ-KD09NA4**		**SEZ-KD12NA4**		**SEZ-KD15NA4**		**SEZ-KD18NA4**	
	Power supply (V, Phase, Hz)			230, 1, 60							
	Input		kW	0.06	0.04	0.07	0.05	0.09	0.07	0.09	0.07
	Current		A	0.51	0.39	0.57	0.46	0.74	0.63	0.74	0.63
	Outdoor unit			**SUZ-KA09NA**		**SUZ-KA12NA**		**SUZ-KA15NA**		**SUZ-KA18NA**	
	Power supply (V, phase, Hz)			230, 1, 60							
	Input		kW	0.61	0.98	0.85	1.09	1.08	1.43	1.39	1.63
	Current		A	2.80	4.33	3.64	4.65	4.45	5.96	5.38	6.91
Refrigerant circuit	Condensing pressure		PSIG	398	448	387	386	399	389	373	397
	Suction pressure		PSIG	135	97	135	104	133	96	142	100
	Discharge temperature		°F	148	170	162	165	159	182	150	172
	Condensing temperature		°F	116	125	114	114	116	115	112	116
	Suction temperature		°F	49	33	55	35	46	41	52	33
	Ref. pipe length		ft.	25							
	Refrigerant charge (R410A)		-	1 lb. 16 oz.		2 lb. 9 oz.				3 lb. 16 oz.	
Indoor unit	Intake air temperature	DB	°F	80	70	80	70	80	70	80	70
		WB	°F	67	60	67	60	67	60	67	60
	Discharge air temperature	DB	°F	61	102	58	103	60	102	60	101
Outdoor unit	Intake air temperature	DB	°F	95	47	95	47	95	47	95	47
		WB	°F	—	43	—	43	—	43	—	43

Representative matching				SLZ-KA09NA		SLZ-KA12NA		SLZ-KA15NA	
Item			Unit	Cooling	Heating	Cooling	Heating	Cooling	Heating
Total	Capacity		BTU/h	8,400	10,900	11,100	13,600	15,000	18,000
	SHF		-	0.84	—	0.77	—	0.67	—
	Input		kW	0.700	0.930	0.920	1.180	1.460	1.950
Electrical circuit	Indoor unit			**SLZ-KA09NA**		**SLZ-KA12NA**		**SLZ-KA15NA**	
	Power supply (V, Phase, Hz)			230, 1, 60					
	Input		kW	0.08	0.08	0.09	0.09	0.09	0.09
	Current		A	0.35	0.35	0.40	0.40	0.65	0.65
	Outdoor unit			**SUZ-KA09NA**		**SUZ-KA12NA**		**SUZ-KA15NA**	
	Power supply (V, phase, Hz)			230, 1, 60					
	Input		kW	0.63	0.86	0.84	1.10	1.38	1.87
	Current		A	3.12	4.02	3.82	4.93	5.98	8.10
Refrigerant circuit	Condensing pressure		PSIG	401	406	379	418	422	475
	Suction pressure		PSIG	147	104	139	106	128	98
	Discharge temperature		°F	154	169	152	173	174	188
	Condensing temperature		°F	116	117	111	118	118	128
	Suction temperature		°F	52	34	51	36	51	31
	Ref. pipe length		ft.	25					
	Refrigerant charge (R410A)		-	1 lb. 16 oz.		2 lb. 9 oz.			
Indoor unit	Intake air temperature	DB	°F	80	70	80	70	80	70
		WB	°F	67	60	67	60	67	60
	Discharge air temperature	DB	°F	62	97	60	101	57	111
Outdoor unit	Intake air temperature	DB	°F	95	47	95	47	95	47
		WB	°F	—	43	—	43	—	43

Representative matching				PEAD-A09AA7		PEAD-A12AA7		PEAD-A15AA7		PEAD-A18AA7	
Item			Unit	Cooling	Heating	Cooling	Heating	Cooling	Heating	Cooling	Heating
Total	Capacity		BTU/h	9,000	10,000	12,000	13,700	15,000	18,000	18,000	21,600
	SHF		-	0.90	-	0.84	-	0.89	-	0.80	-
	Input		kW	0.720	0.740	0.950	0.950	1.200	1.300	1.440	1.600
Electrical circuit	Indoor unit			**PEAD-A09AA7**		**PEAD-A12AA7**		**PEAD-A15AA7**		**PEAD-A18AA7**	
	Power supply (V, Phase, Hz)			230, 1, 60							
	Input		kW	0.07	0.05	0.09	0.07	0.11	0.09	0.11	0.09
	Current		A	0.54	0.43	0.67	0.56	0.95	0.84	0.95	0.84
	Outdoor unit			**SUZ-KA09NA**		**SUZ-KA12NA**		**SUZ-KA15NA**		**SUZ-KA18NA**	
	Power supply (V, Phase, Hz)			230, 1, 60							
	Input		kW	0.65	0.69	0.86	0.88	1.09	1.21	1.33	1.51
	Current		A	3.01	3.18	3.59	3.84	4.44	4.97	5.48	6.17
Refrigerant circuit	Condensing pressure		PSIG	409	339	382	344	401	327	376	357
	Suction pressure		PSIG	150	103	141	104	146	98	142	104
	Discharge temperature		°F	153	162	154	148	150	143	152	154
	Condensing temperature		°F	116	101	113	103	116	99	112	36
	Suction temperature		°F	55	52	55	35	55	32	55	35
	Ref. pipe length		ft	25							
	Refrigerant charge (R410A)		-	1 lb. 16 oz.		2 lb. 9 oz.				3 lb. 16 oz	
Indoor unit	Intake air temperature	DB	°F	80	70	80	70	80	70	80	70
		WB	°F	67	60	67	60	67	60	67	60
	Discharge air temperature	DB	°F	59	97	59	99	59	99	57	104
Outdoor unit	Intake air temperature	DB	°F	95	47	95	47	95	70	95	47
		WB	°F	75	43	75	43	75	47	75	43

Representative matching				SVZ-KP12NA		SVZ-KP18NA	
Item			Unit	Cooling	Heating	Cooling	Heating
Total	Capacity		BTU/h	12,000	13,500	18000	19,000
	SHF		-	0.83	-	0.86	-
	Input		kW	0.960	1.210	1.440	1.470
Electrical circuit	Indoor unit			**SVZ-KP12NA**		**SVZ-KP18NA**	
	Power supply (V, Phase, Hz)			230, 1, 60			
	Input		kW	0.10	0.10	0.16	0.16
	Current		A	0.90	0.90	1.44	1.44
	Outdoor unit			**SUZ-KA12NA**		**SUZ-KA18NA**	
	Power supply (V, Phase, Hz)			230, 1, 60			
	Input		kW	0.86	1.11	1.28	1.31
	Current		A	3.59	4.40	5.55	5.60
Refrigerant circuit	Condensing pressure		PSIG	381	324	377	353
	Suction pressure		PSIG	144	93	149	107
	Discharge temperature		°F	148	157	146	143
	Condensing temperature		°F	99	100	112	100
	Suction temperature		°F	56	48	54	38
	Ref. pipe length		ft	25			
	Refrigerant charge (R410A)		-	2 lb. 9 oz.		3 lb. 16 oz	
Indoor unit	Intake air temperature	DB	°F	80	70	80	70
		WB	°F	67	60	67	60
	Discharge air temperature	DB	°F	61	98	60	96
Outdoor unit	Intake air temperature	DB	°F	95	47	95	47
		WB	°F	75	43	75	43

Model				MFZ-KJ09NA		MFZ-KJ12NA		MFZ-KJ15NA		MFZ-KJ18NA	
Item			Unit	Cooling	Heating	Cooling	Heating	Cooling	Heating	Cooling	Heating
Total	Capacity		Btu/h	9,000	11,000	12,000	13,000	15,000	18,000	17,000	21,000
	SHF		—	0.79	—	0.70	—	0.66	—	0.65	—
	Input		kW	0.570	0.750	0.890	0.900	1.120	1.140	1.350	1.730
	Rated frequency		Hz	33	45	46	53	48	57	56	62
Electrical circuit	Indoor unit			**MFZ-KJ09NA**		**MFZ-KJ12NA**		**MFZ-KJ15NA**		**MFZ-KJ18NA**	
	Power supply		V, phase, Hz	208/230, 1, 60							
	Input		kW	0.025		0.025		0.027		0.047	
	Fan motor current		A	0.26/0.23		0.26/0.23		0.28/0.35		0.48/0.43	
	Outdoor unit			**MUFZ-KJ09NAHZ**		**MUFZ-KJ12NAHZ**		**MUFZ-KJ15NAHZ**		**MUFZ-KJ18NAHZ**	
	Power supply		V, phase, Hz	208/230, 1, 60							
	Input		kW	0.545	0.725	0.865	0.875	1.093	1.376	1.303	1.687
	Comp. current		A	2.21/2.00	3.09/2.79	3.75/3.39	3.81/3.45	4.05/3.63	5.38/4.86	5.05/4.54	6.87/6.22
	Fan motor current		A	0.41/0.37	0.40/0.36	0.41/0.37	0.40/0.36	1.21/1.09	1.24/1.12	1.21/1.09	1.24/1.12
Refrigerant circuit	Condensing pressure		PSIG	377	331	401	360	382	414	388	441
	Suction pressure		PSIG	172	126	159	121	158	127	154	124
	Discharge temperature		˚F	141	117	150	142	149	166	150	178
	Condensing temperature		˚F	109	98	113	104	110	112	111	117
	Suction temperature		˚F	60	37	52	36	55	38	51	41
	Comp. shell bottom temperature		˚F	131	109	141	132	140	156	143	168
	Ref. pipe length		ft.	25							
	Refrigerant charge (R410A)			2 lb. 10oz				3 lb 5 oz.			
Indoor unit	Intake air temperature	DB	˚F	80	70	80	70	80	70	80	70
		WB	˚F	67	60	67	60	67	60	67	60
	Discharge air temperature	DB	˚F	61	95	58	101	56	110	56	115
		WB	˚F	60	—	57	—	55	—	55	—
	Fan speed (High)		rpm	1,080	1,080	1,080	1,080	1,110	1,200	1,240	1,200
	Airflow (High)		CFM	354 (Wet)	417	354 (Wet)	417	366 (Wet)	470	417 (Wet)	470
Outdoor unit	Intake air temperature	DB	˚F	95	47	95	47	95	47	95	47
		WB	˚F	—	43	—	43	—	43	—	43
	Fan speed		rpm	810	900	810	900	820	860	820	860
	Airflow		CFM	1,074	1,202	1,074	1,202	1,653	1,730	1,653	1,730

8-5. CAPACITY AND INPUT CORRECTION BY INVERTER OUTPUT FREQUENCY

MUY-GL09NA

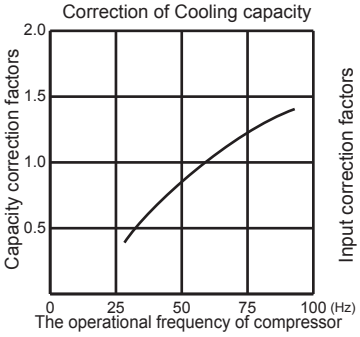

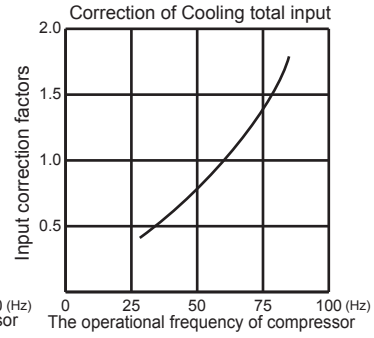

MUZ-GL09NA - U1 MUZ-GL09NAH- U1

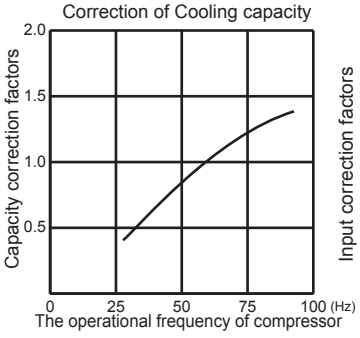

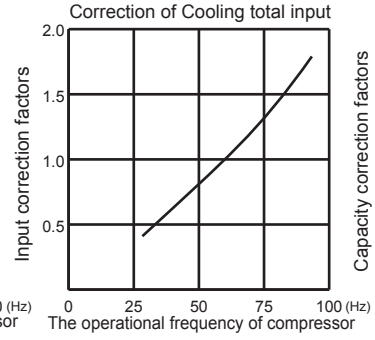

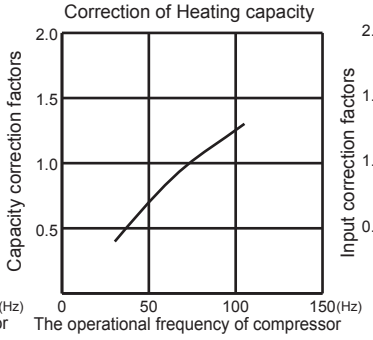

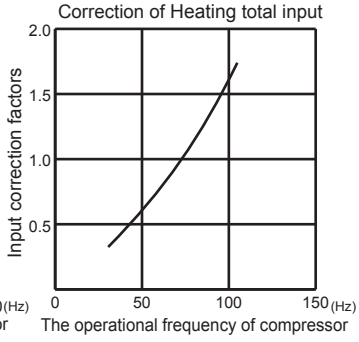

MUZ-GL09NA - U8 MUZ-GL09NAH - U8

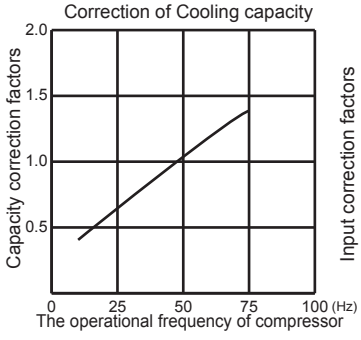

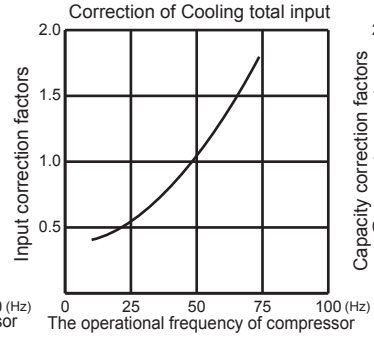

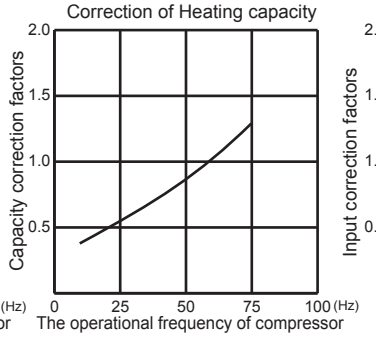

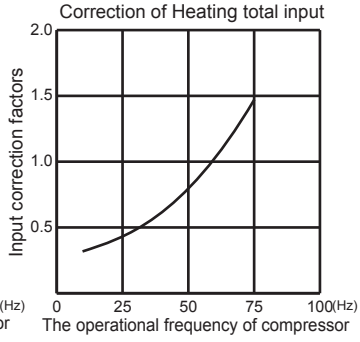

MUZ-GL12NA MUZ-GL12NAH MUY-GL12NA

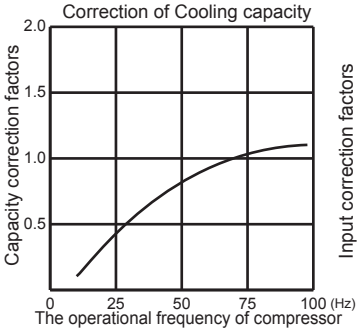

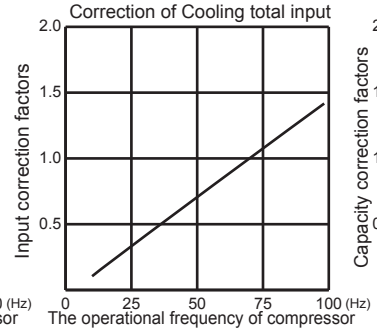

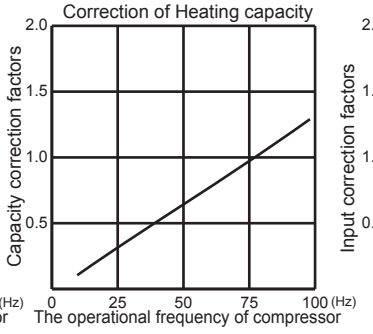

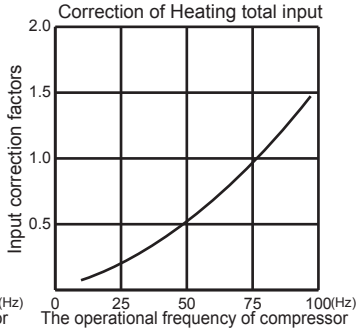

MUZ-GL15NA MUZ-GL15NAH MUY-GL15NA

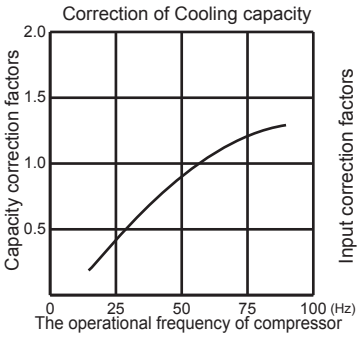

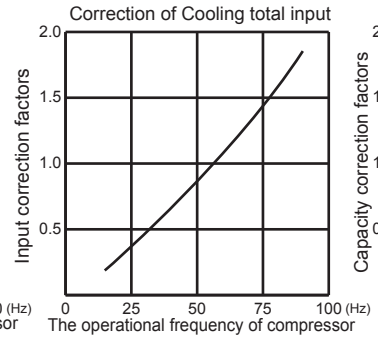

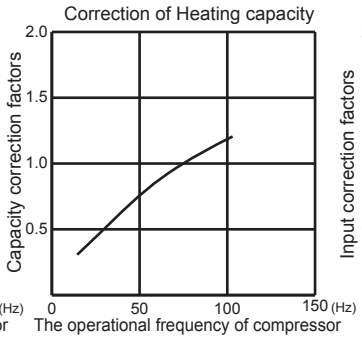

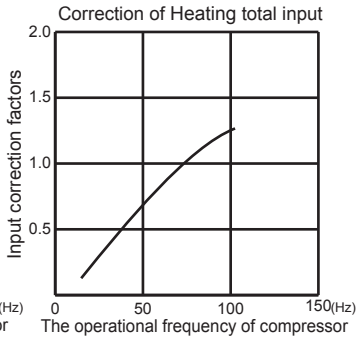

MUZ-GL18NA MUZ-GL18NAH MUY-GL18NA

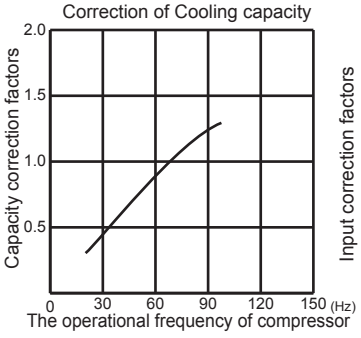

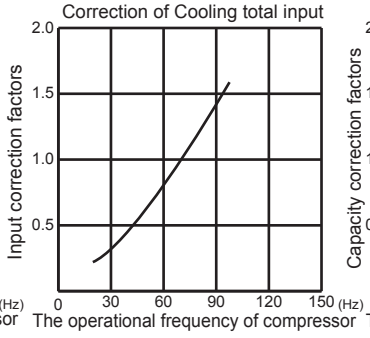

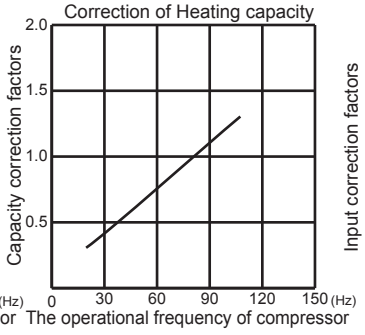

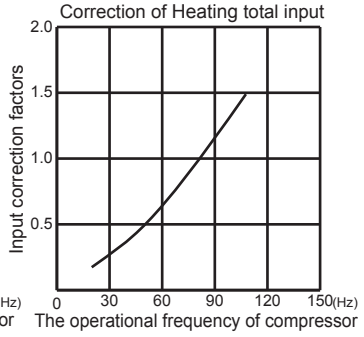

MUZ-GL24NA MUZ-GL24NAH MUY-GL24NA

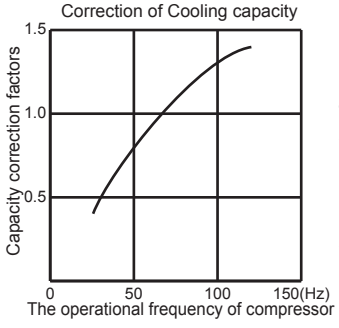

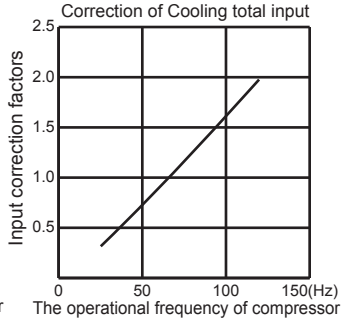

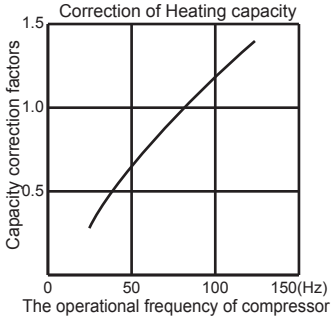

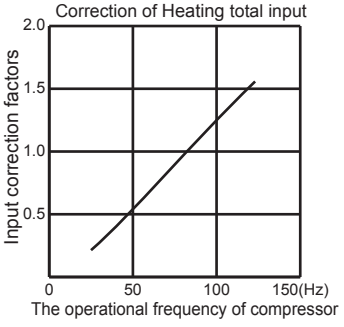

MUZ-HM09NA2 - U1

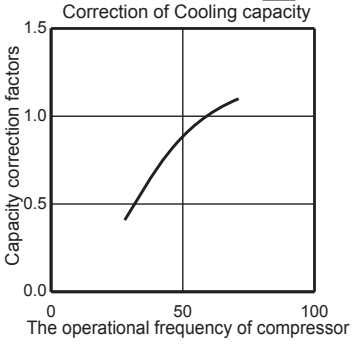

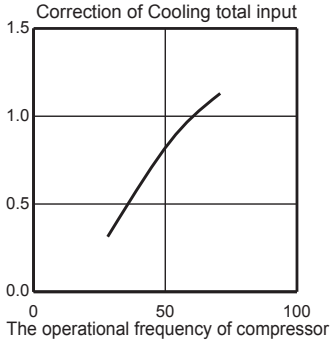

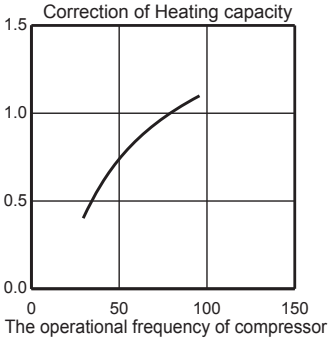

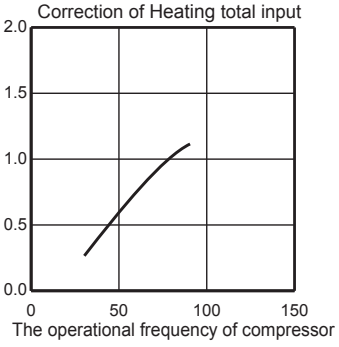

MUZ-HM09NA - U8

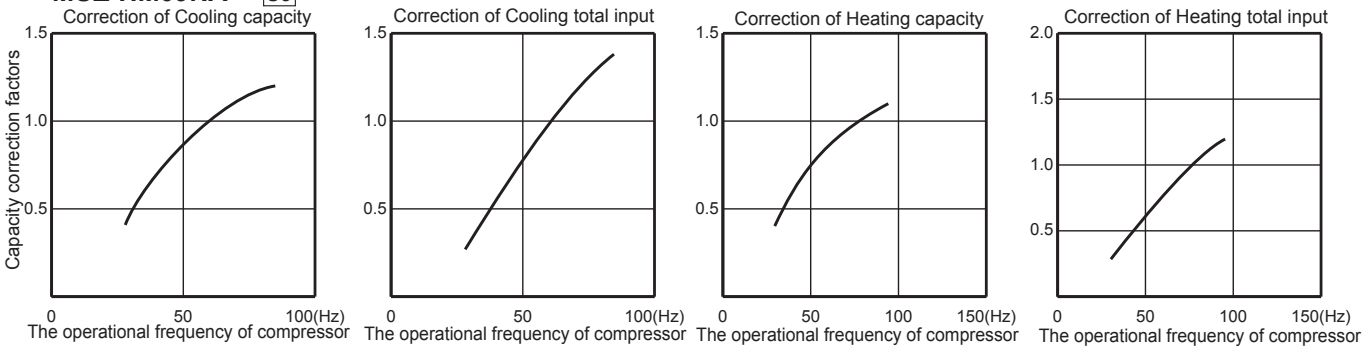

MUZ-HM12NA - U1

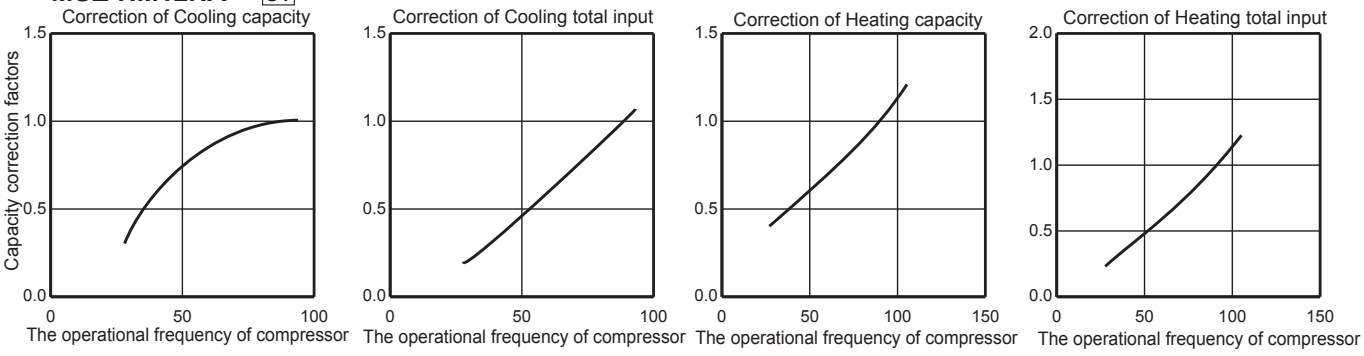

MUZ-HM12NA - U8

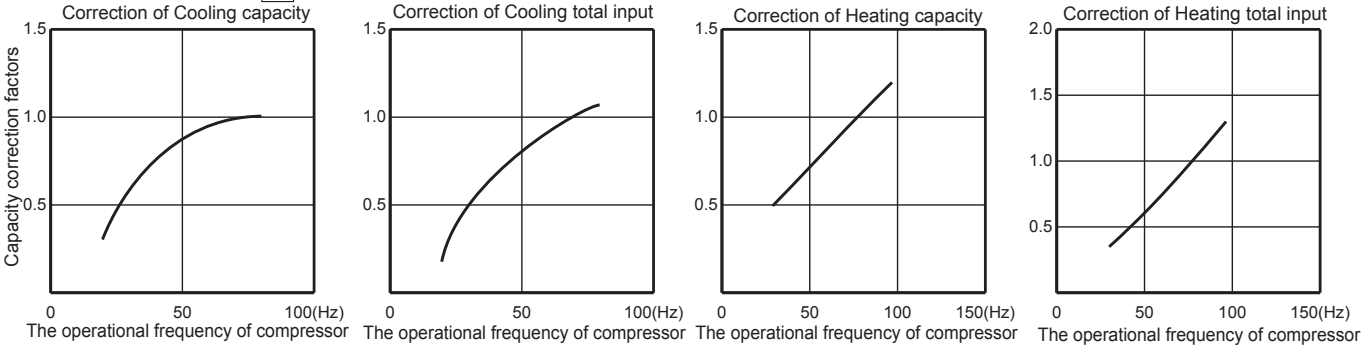

MUZ-HM15NA

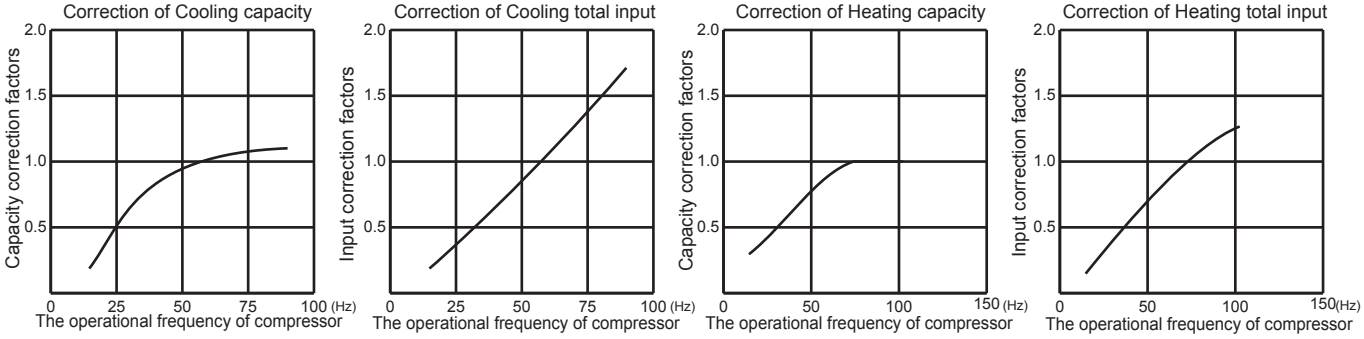

MUZ-HM18NA

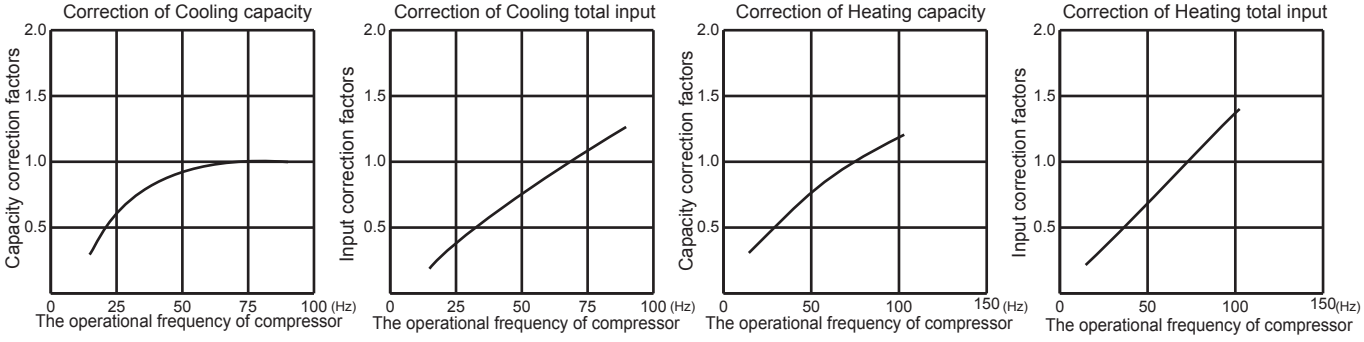

MUZ-HM24NA

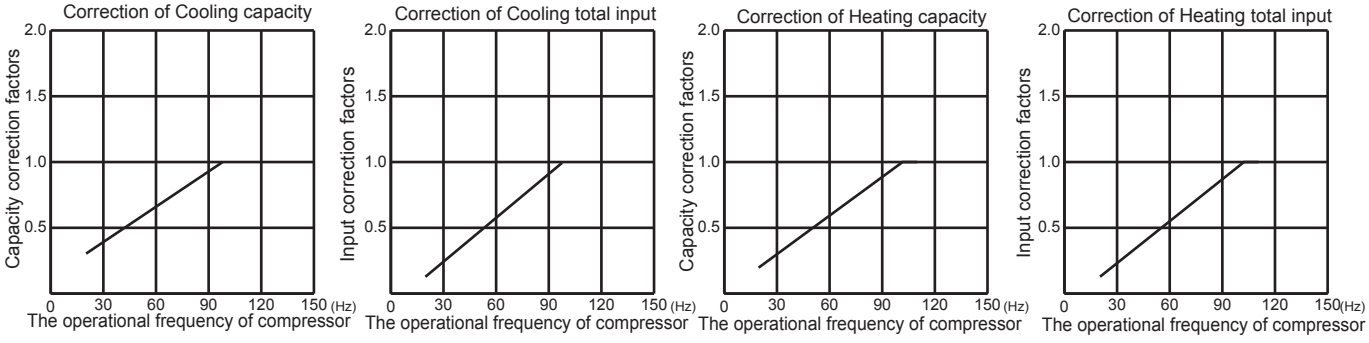

MUZ-FH06NA MUZ-FH06NAH

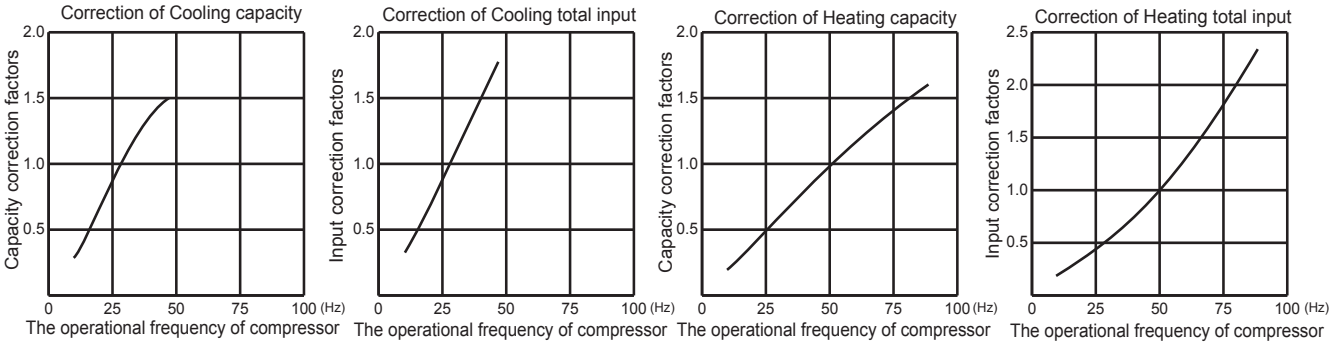

MUZ-FH09NA MUZ-FH09NAH

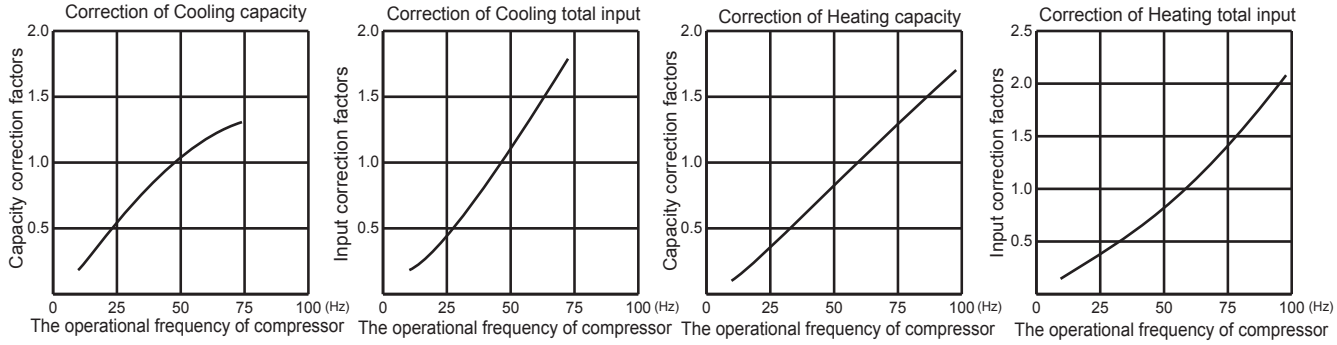

MUZ-FH12NA MUZ-FH12NAH

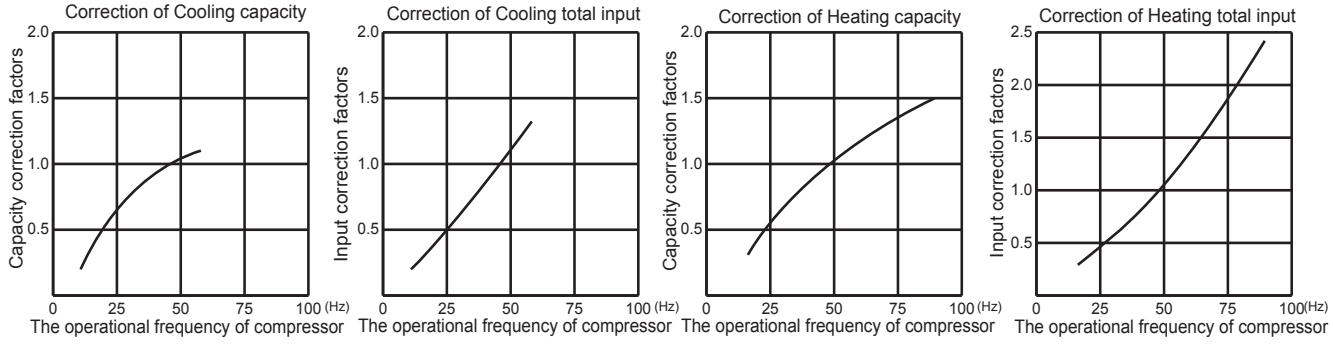

MUZ-FH15NA MUZ-FH15NAH

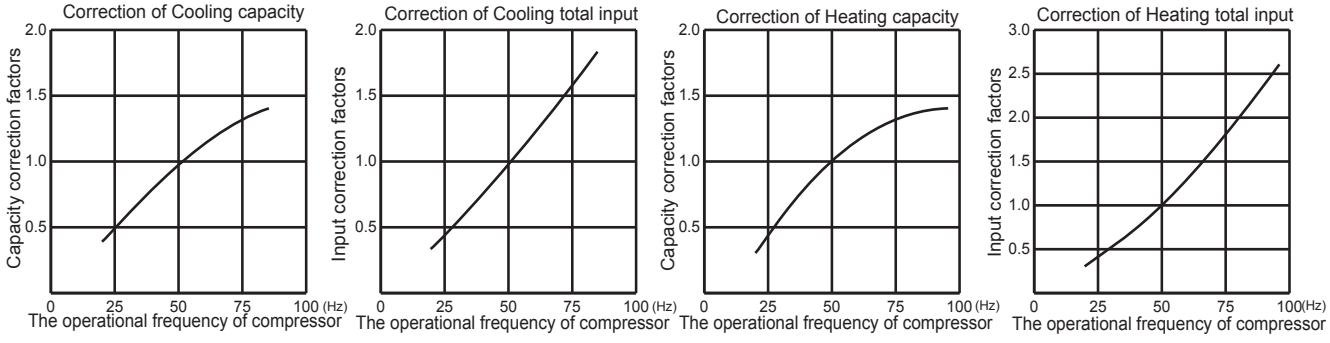

MUZ-FH18NA2 MUZ-FH18NAH2

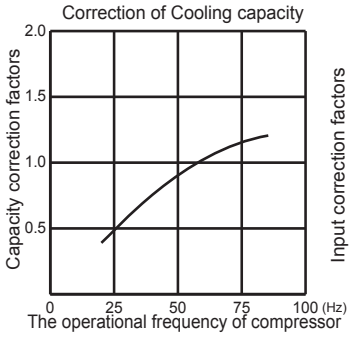

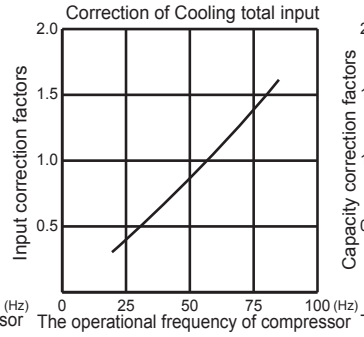

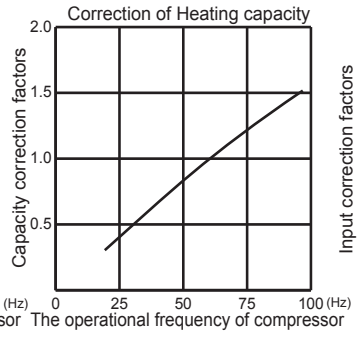

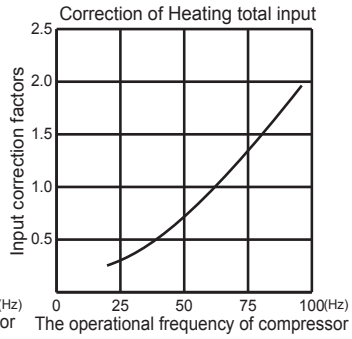

MUZ-FE09NAH

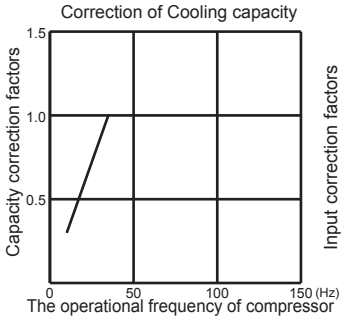

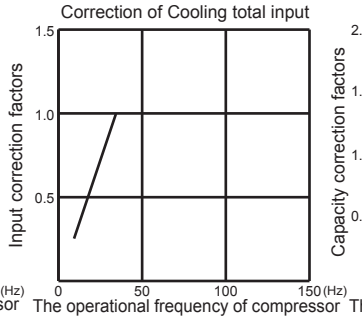

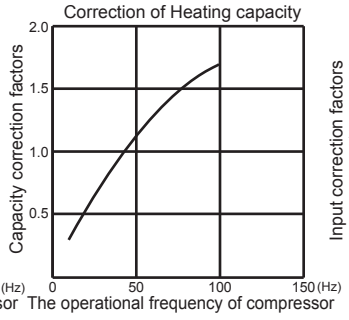

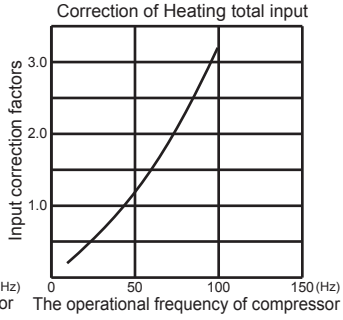

MUZ-FE12NAH

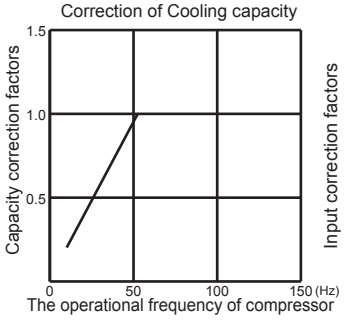

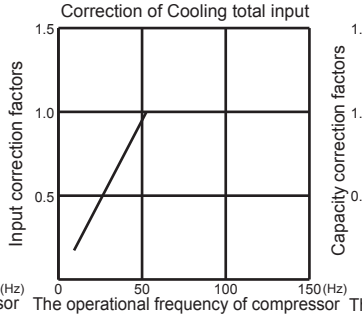

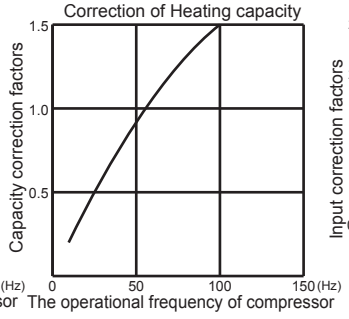

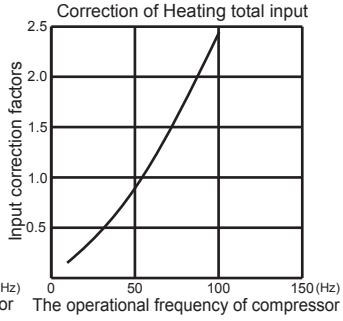

MUZ-D30NA

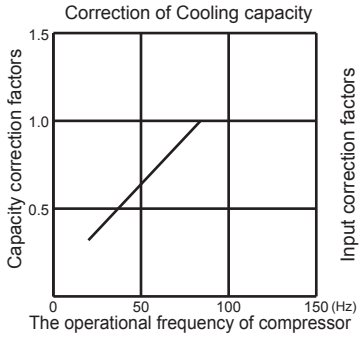

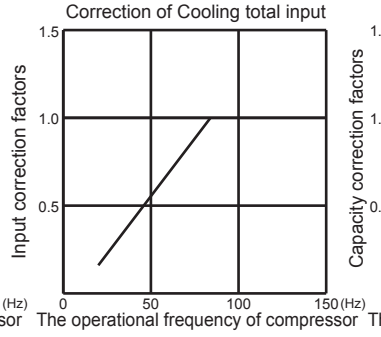

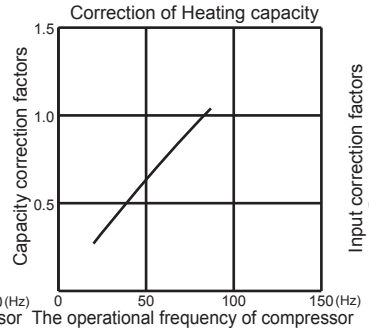

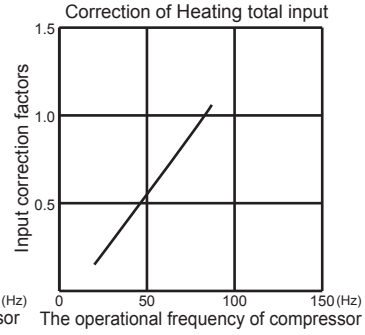

MUZ-D36NA

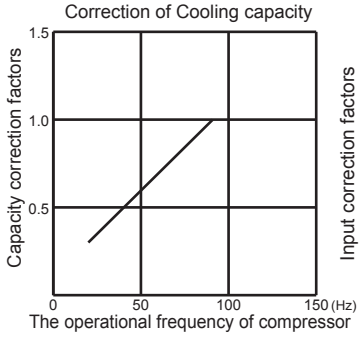

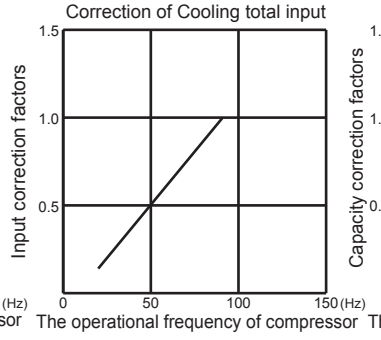

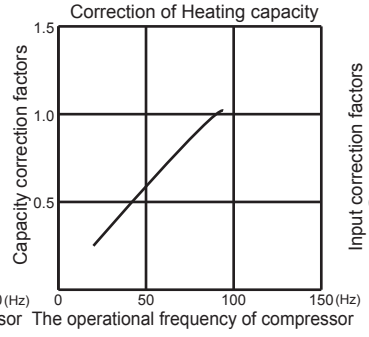

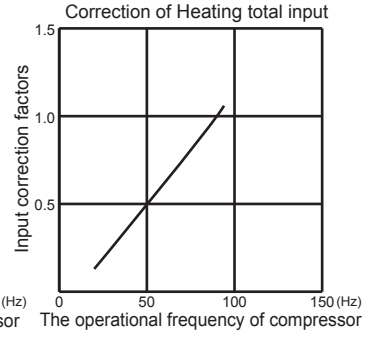

MUY-D30NA

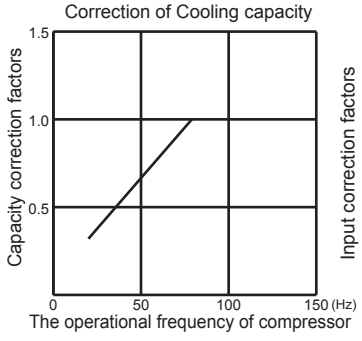

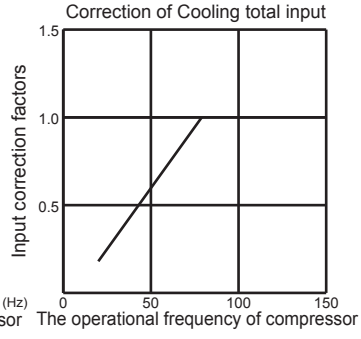

MUY-D36NA

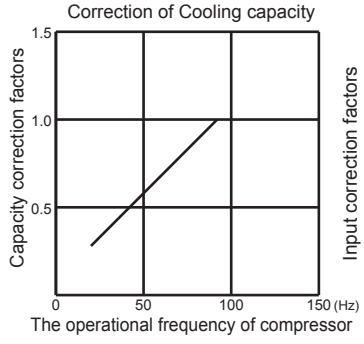

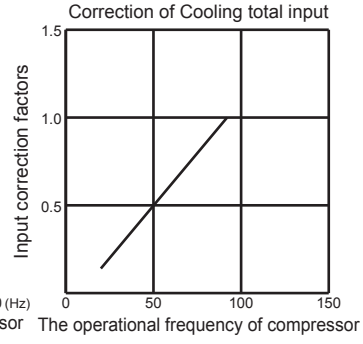

MUFZ-KJ09NAHZ

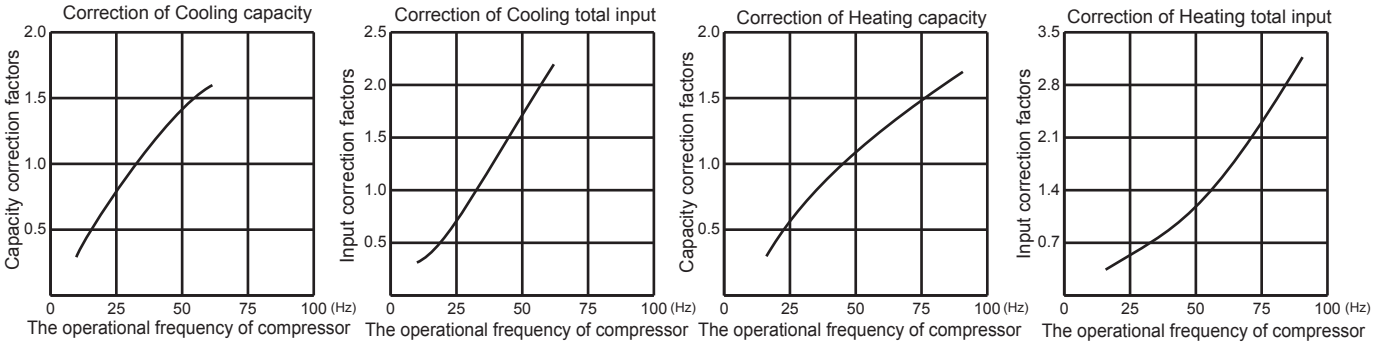

MUFZ-KJ12NAHZ

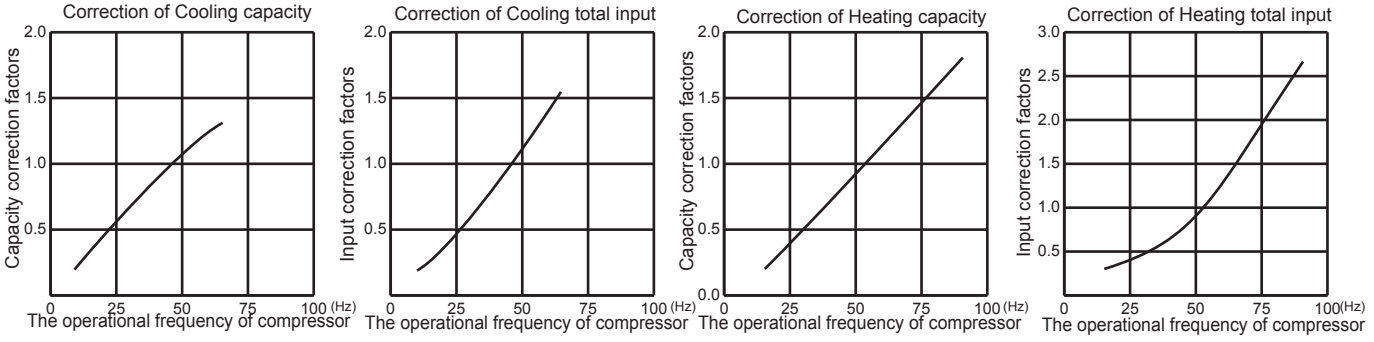

MUFZ-KJ15NAHZ

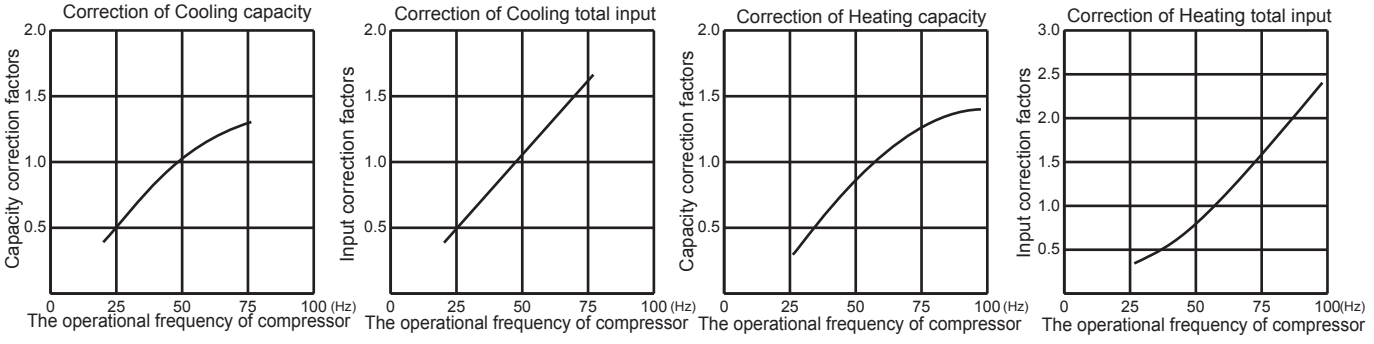

MUFZ-KJ18NAHZ

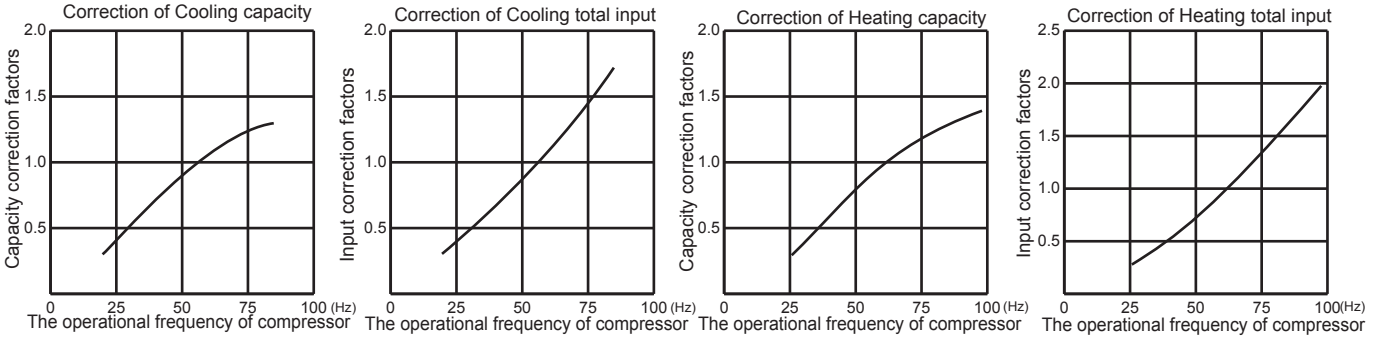

8-6. TEST RUN OPERATION (How to operate fixed-frequency operation)

1. Press EMERGENCY OPERATION switch to COOL or HEAT mode (COOL: Press once, HEAT: Press twice).
2. Test run operation starts and continues to operate for 30 minutes.
3. Compressor operates at rated frequency in COOL mode or 58 Hz in HEAT mode.
4. Indoor fan operates at High speed.
5. After 30 minutes, test run operation finishes and EMERGENCY OPERATION starts (operation frequency of compressor varies).
6. To cancel test run operation or EMERGENCY OPERATION, press EMERGENCY OPERATION switch or any button on remote controller.

9 AIR FLOW DATA

9-1. INDOOR FAN PERFORMANCE AND CORRECTED AIR FLOW

SEZ-KD09NA4

(External static pressure 0.02[in.WG](5Pa)) 208/230V 60Hz

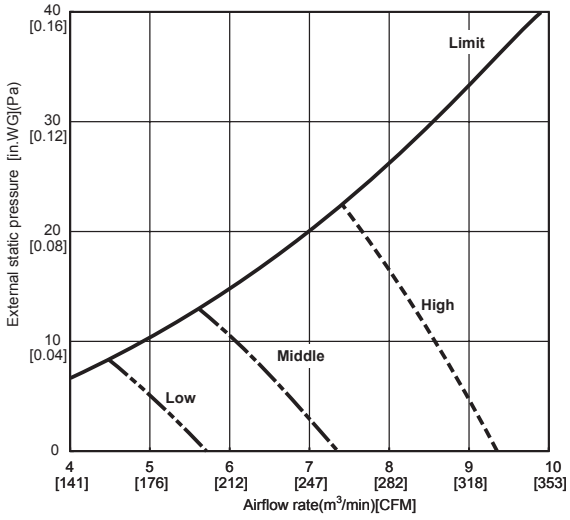

SEZ-KD09NA4

(External static pressure 0.06[in.WG](15Pa)) 208/230V 60Hz

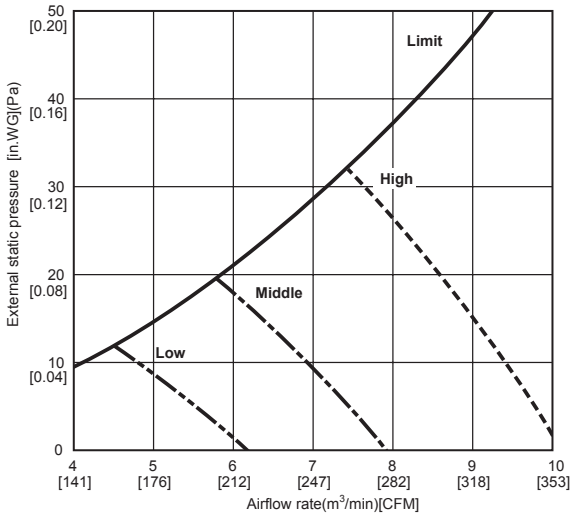

SEZ-KD09NA4

(External static pressure 0.14[in.WG](35Pa)) 208/230V 60Hz

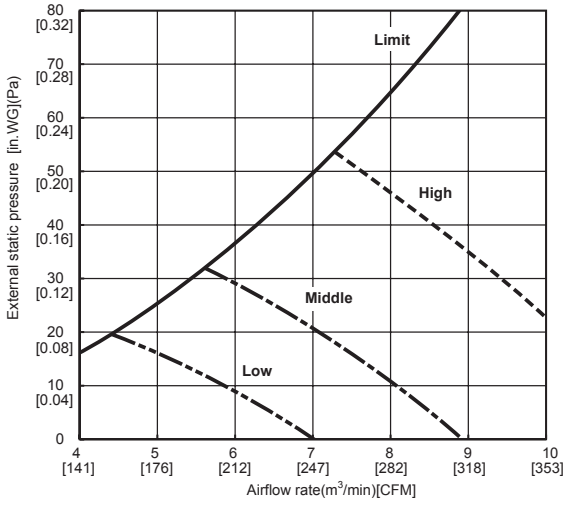

SEZ-KD09NA4

(External static pressure 0.20[in.WG](50Pa)) 208/230V 60Hz

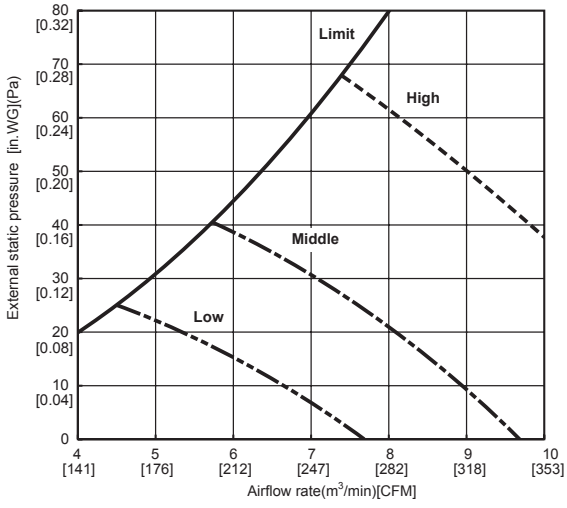

SEZ-KD12NA4

(External static pressure 0.02[in.WG](5Pa)) 208/230V 60Hz

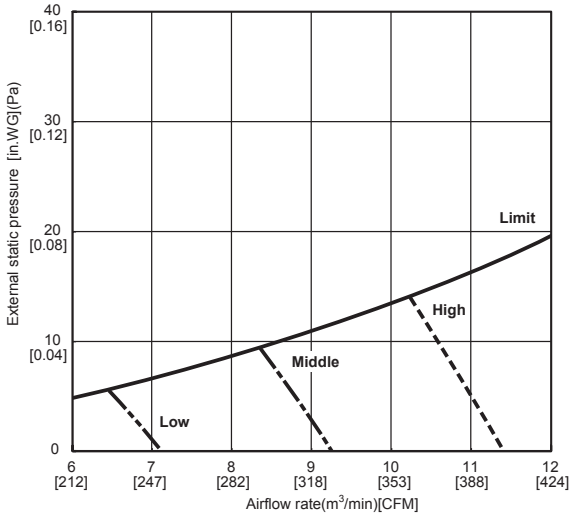

SEZ-KD12NA4

(External static pressure 0.06[in.WG](15Pa)) 208/230V 60Hz

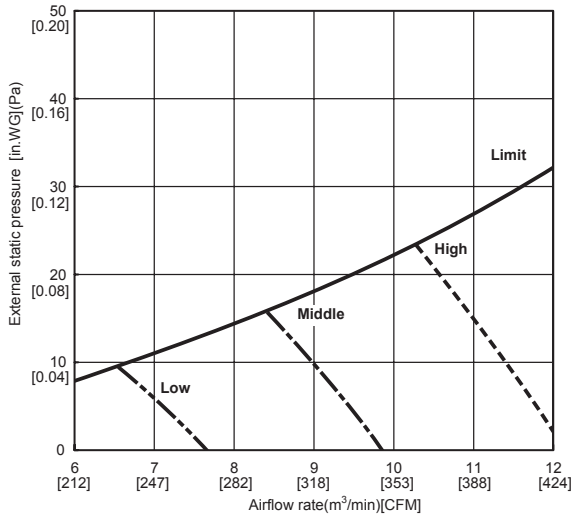

SEZ-KD12NA4

(External static pressure 0.14[in.WG](35Pa)) 208/230V 60Hz

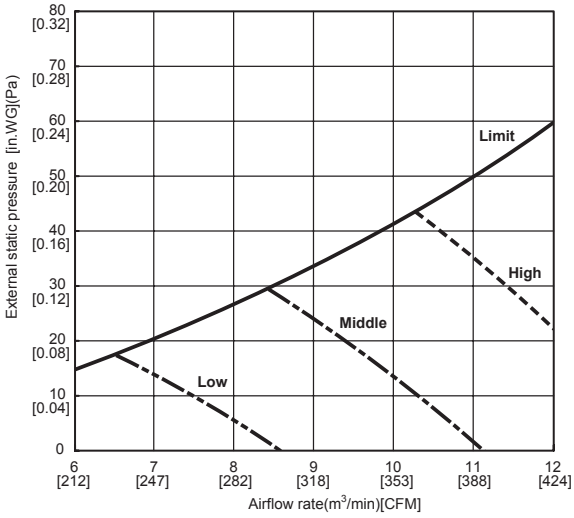

SEZ-KD12NA4

(External static pressure 0.20[in.WG](50Pa)) 208/230V 60Hz

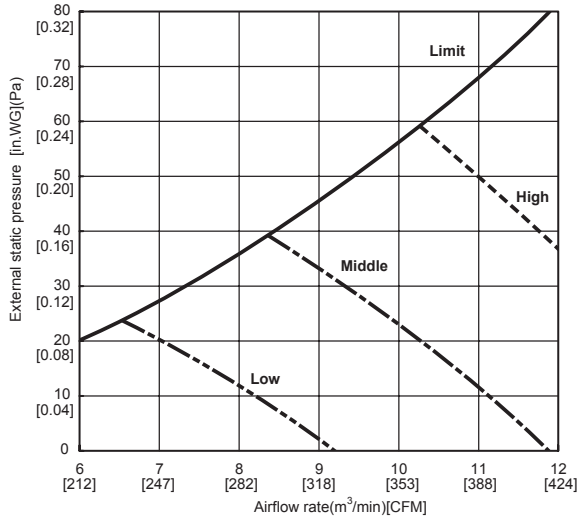

SEZ-KD15NA4

(External static pressure 0.02[in.WG](5Pa)) 208/230V 60Hz

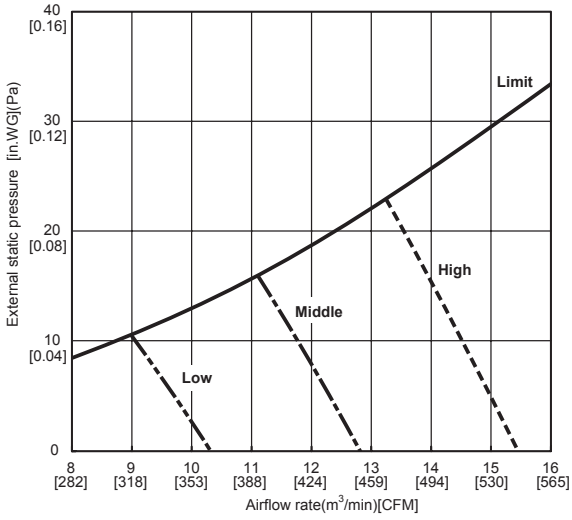

SEZ-KD15NA4

(External static pressure 0.06[in.WG](15Pa)) 208/230V 60Hz

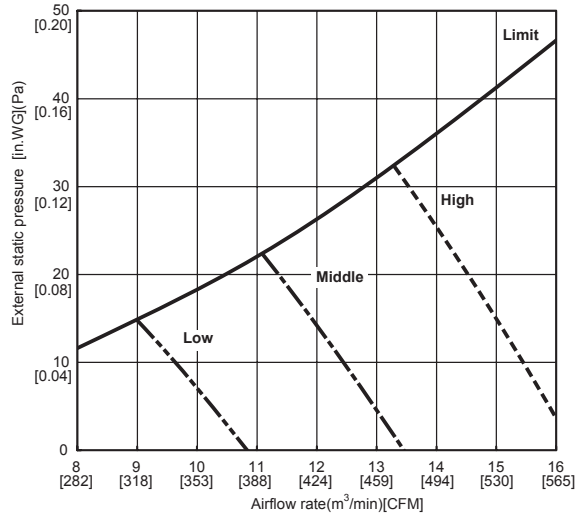

SEZ-KD15NA4

(External static pressure 0.14[in.WG](35Pa)) 208/230V 60Hz

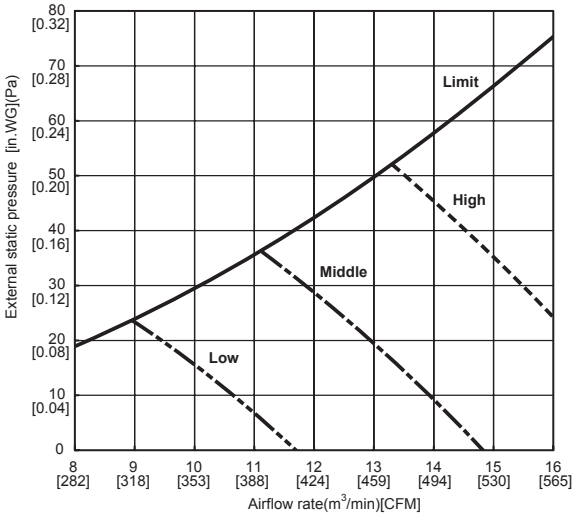

SEZ-KD15NA4

(External static pressure 0.20[in.WG](50Pa)) 208/230V 60Hz

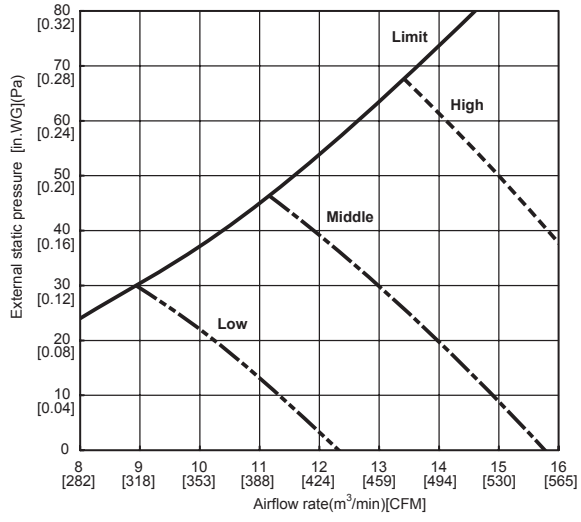

SEZ-KD18NA4

(External static pressure 0.02[in.WG](5Pa)) 208/230V 60Hz

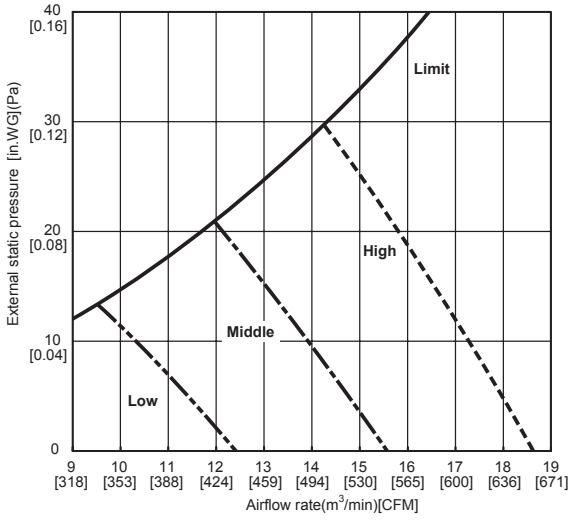

SEZ-KD18NA4

(External static pressure 0.06[in.WG](15Pa)) 208/230V 60Hz

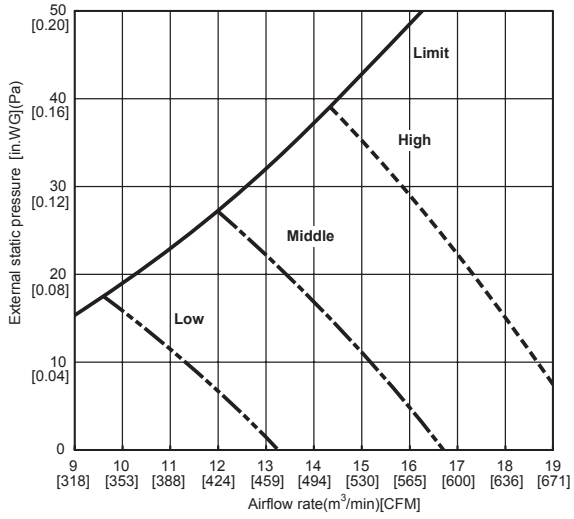

SEZ-KD18NA4

(External static pressure 0.14[in.WG](35Pa)) 208/230V 60Hz

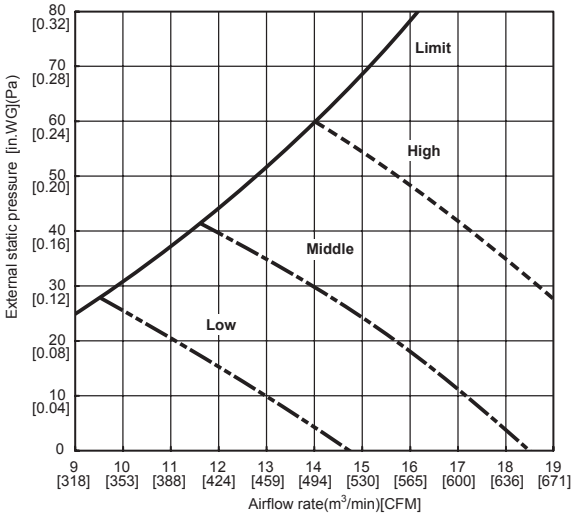

SEZ-KD18NA4

(External static pressure 0.20[in.WG](50Pa)) 208/230V 60Hz

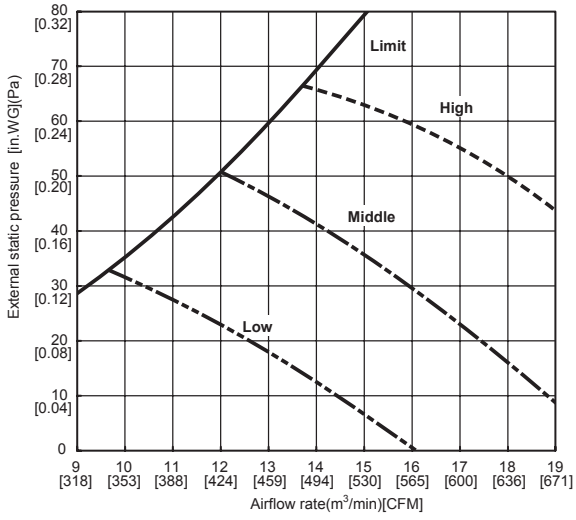

SLZ-KA09NA SLZ-KA12NA SLZ-KA15NA

		SLZ-KA09NA	SLZ-KA12NA	SLZ-KA15NA
Air flow H-M-L	m^3/min	10 - 9 - 8	11 - 9 - 8	11 - 9 - 8
	CFM	350-320-280	390-320-280	390-320-280
Air speed at Hi m/sec.		3.4	3.7	3.7
Coverage range m		3.7	4.1	4.1

PEAD-A09AA7
(External static pressure 35Pa) 208-230V 60Hz

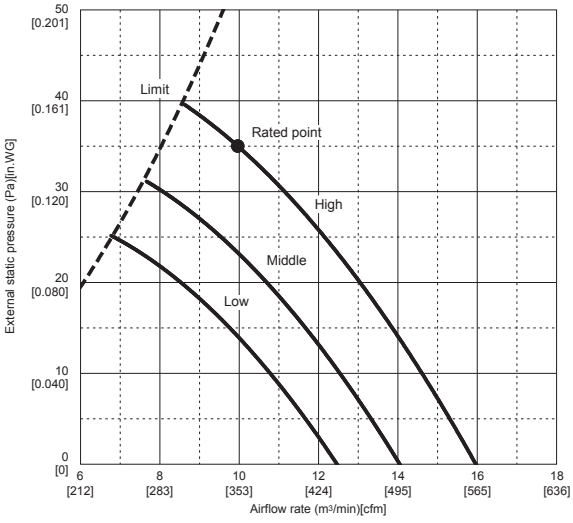

PEAD-A09AA7
(External static pressure 100Pa) 208-230V 60Hz

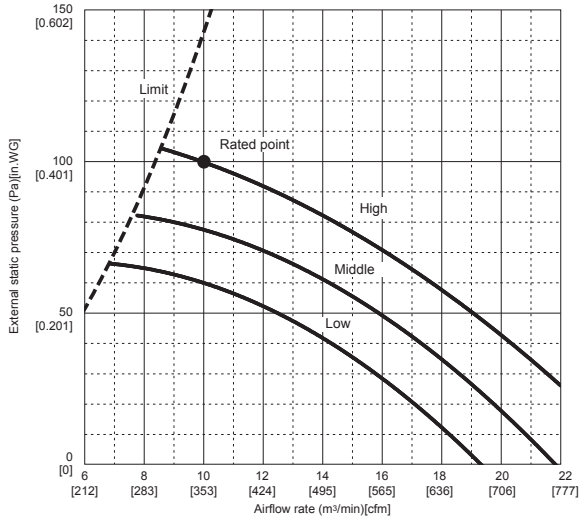

PEAD-A09AA7
(External static pressure 50Pa) 208-230V 60Hz

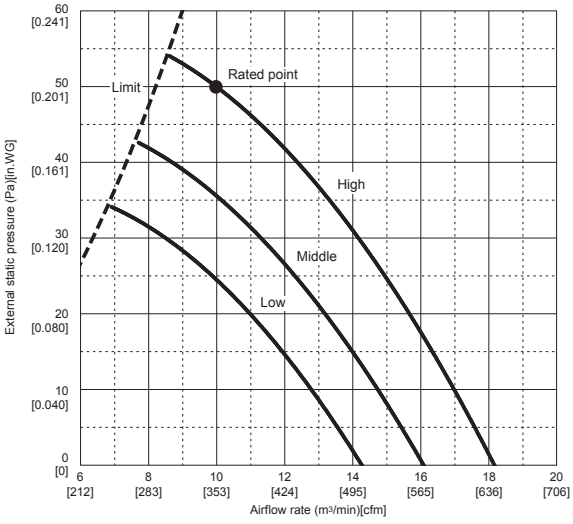

PEAD-A09AA7
(External static pressure 150Pa) 208-230V 60Hz

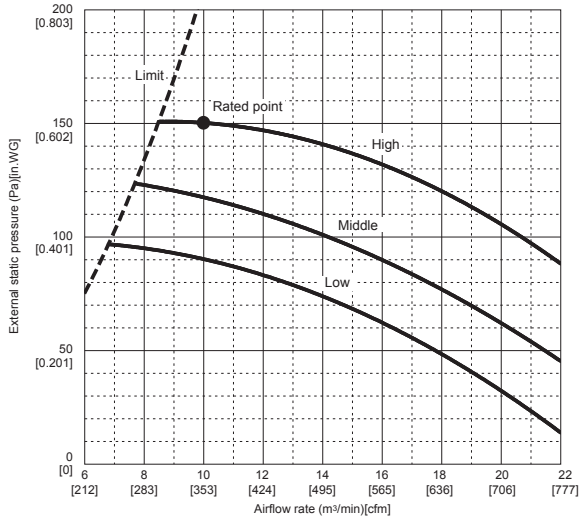

PEAD-A09AA7
(External static pressure 70Pa) 208-230V 60Hz

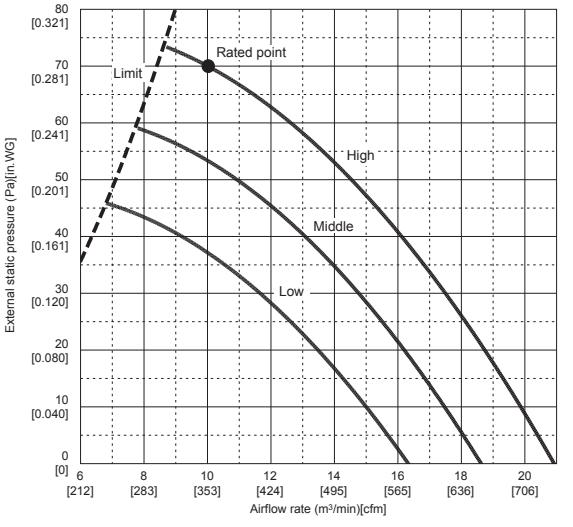

PEAD-A12AA7
(External static pressure 35Pa) 208-230V 60Hz

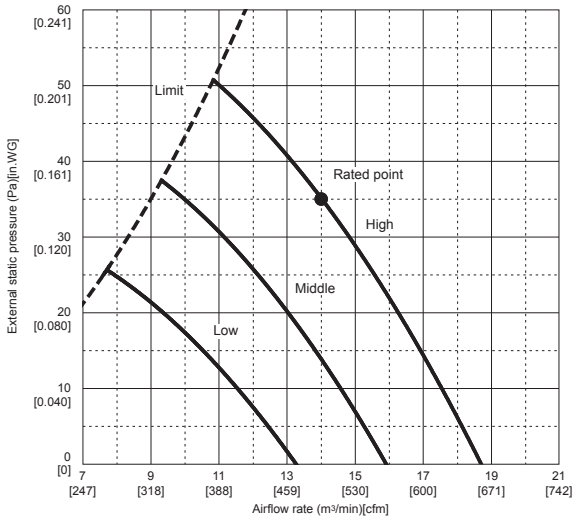

PEAD-A12AA7
(External static pressure 100Pa) 208-230V 60Hz

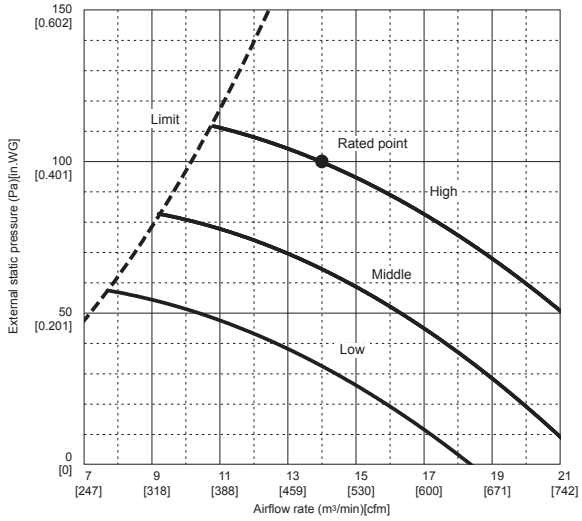

PEAD-A12AA7
(External static pressure 50Pa) 208-230V 60Hz

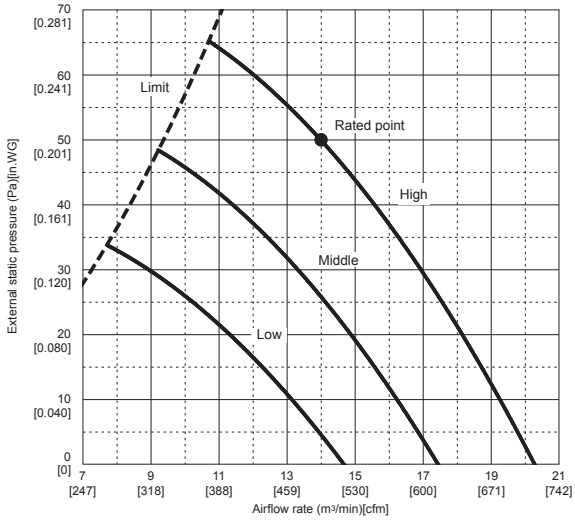

PEAD-A12AA7
(External static pressure 150Pa) 208-230V 60Hz

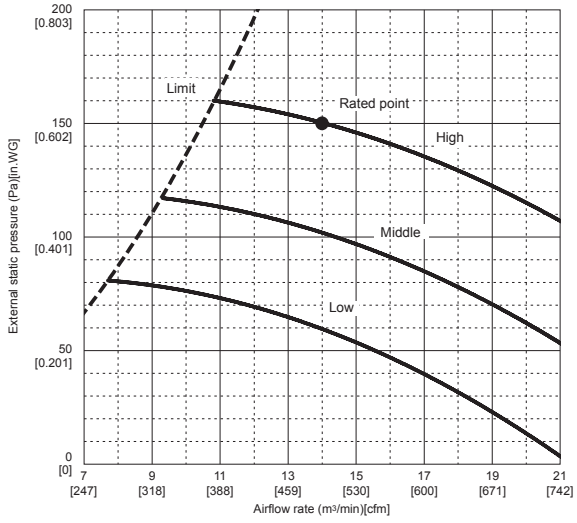

PEAD-A12AA7
(External static pressure 70Pa) 208-230V 60Hz

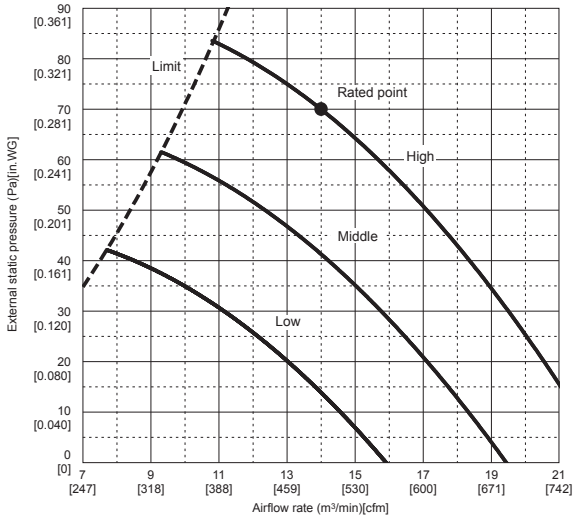

PEAD-A15, 18AA7
(External static pressure 35Pa) 208-230V 60Hz

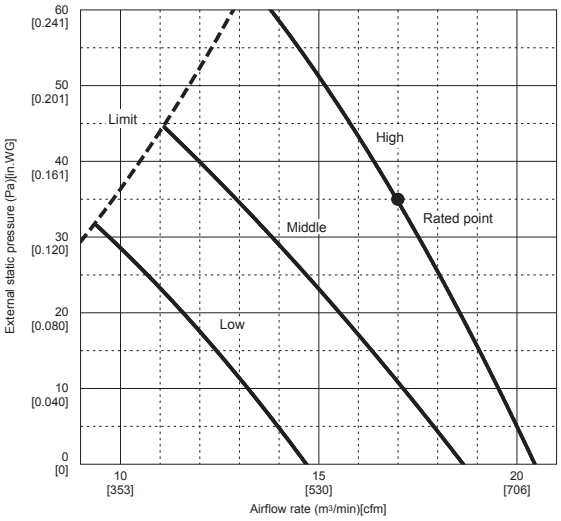

PEAD-A15, 18AA7
(External static pressure 100Pa) 208-230V 60Hz

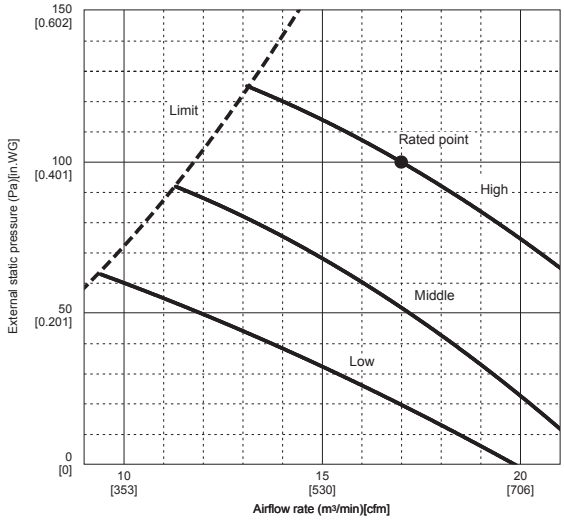

PEAD-A15, 18AA7
(External static pressure 50Pa) 208-230V 60Hz

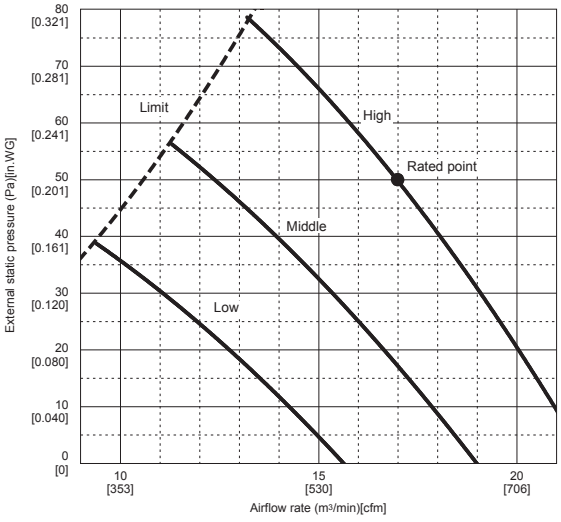

PEAD-A15, 18AA7
(External static pressure 150Pa) 208-230V 60Hz

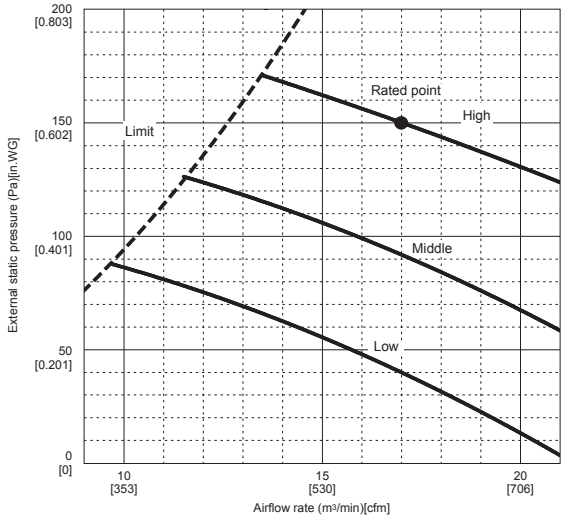

PEAD-A15, 18AA7
(External static pressure 70Pa) 208-230V 60Hz

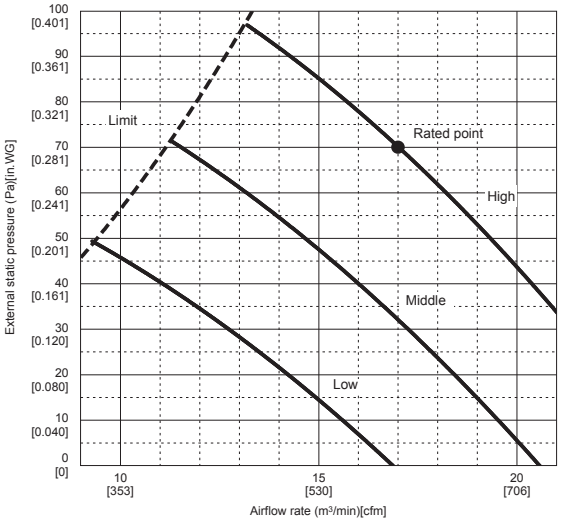

PEAD-A09/12/15/18AA7
Air filter 208-230V 60Hz

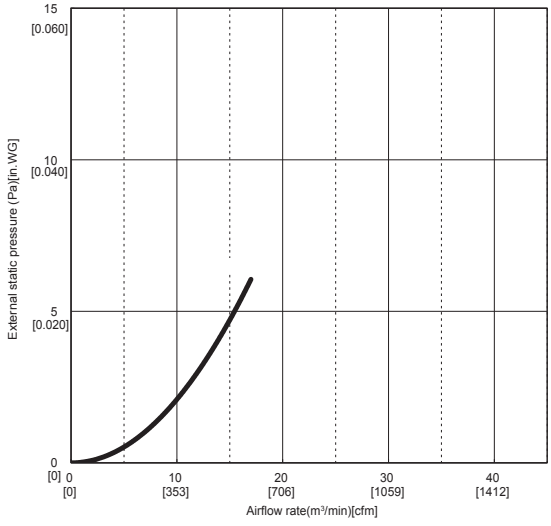

SVZ-KP12NA

- Vertical, Horizontal Right, Horizontal Left

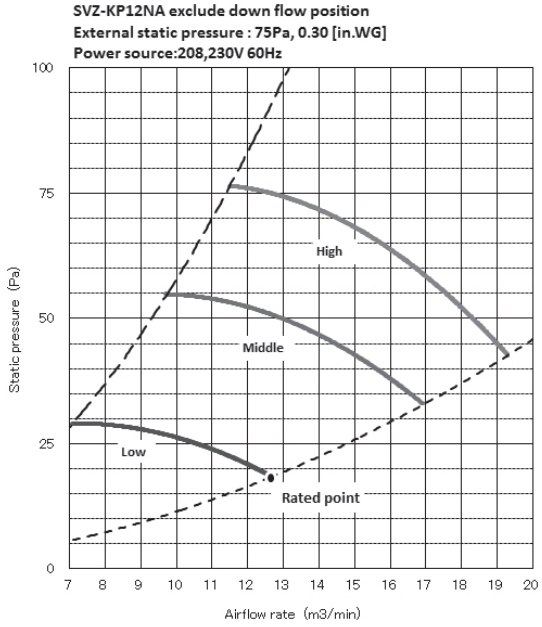

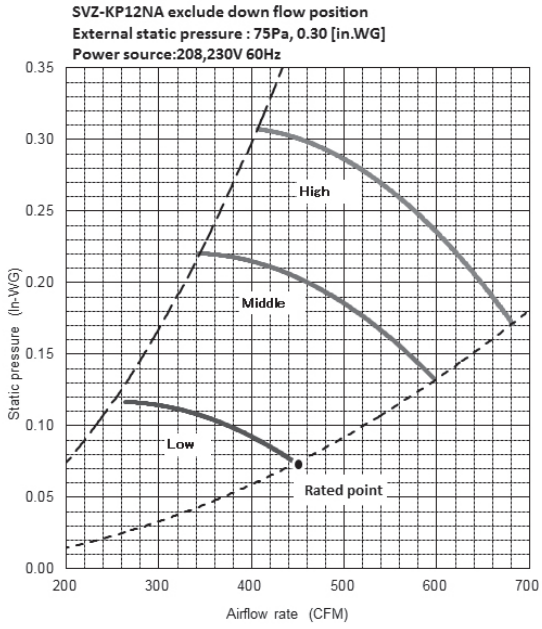

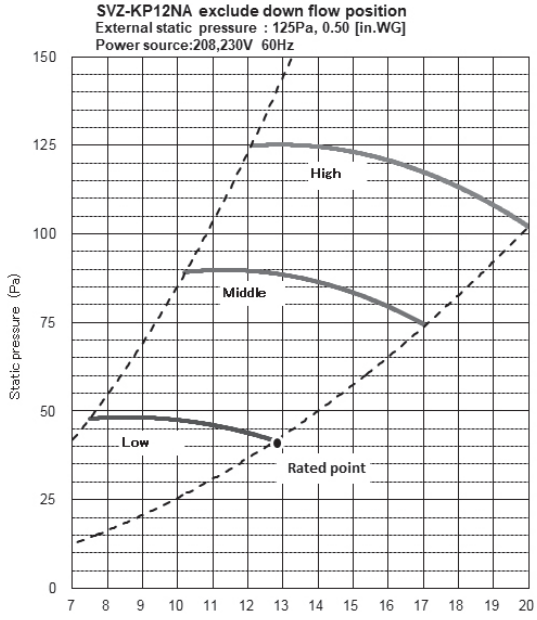

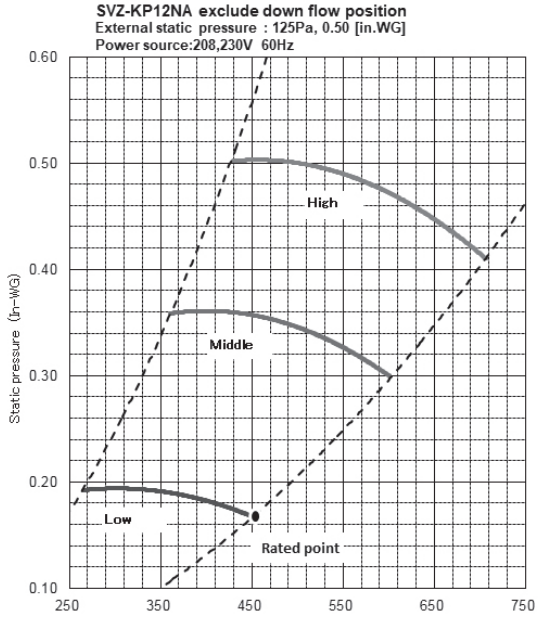

Specifications are subject to change without notice.

SVZ-KP12NA

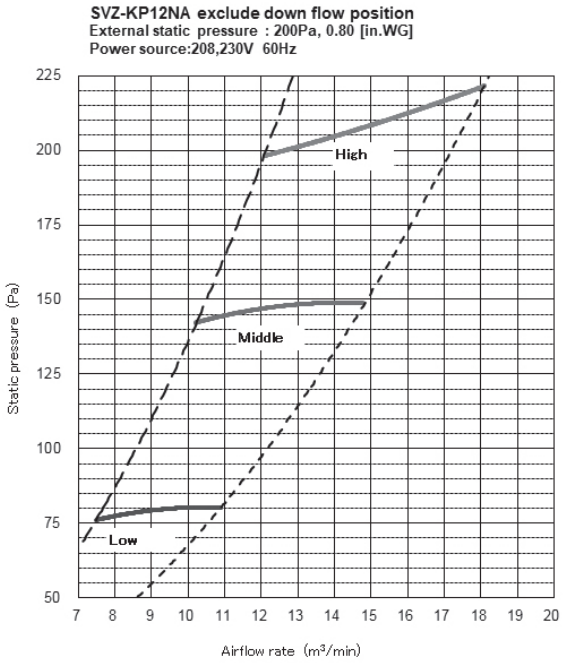

*. 200 Pa (0.80 in WG) does not have "Rated point".

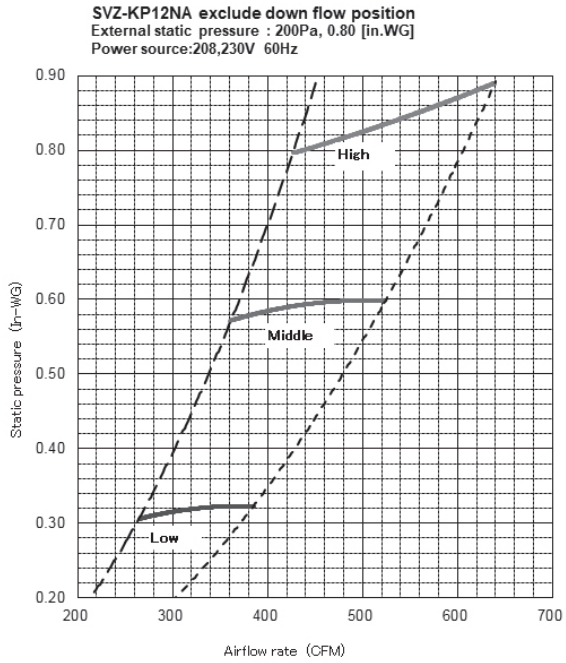

*. 200 Pa (0.80 in WG) does not have "Rated point".

SVZ-KP18NA

- Vertical, Horizontal Right, Horizontal Left

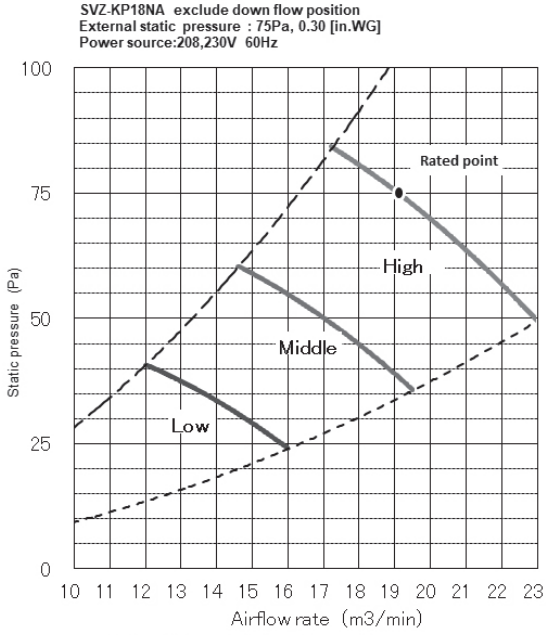

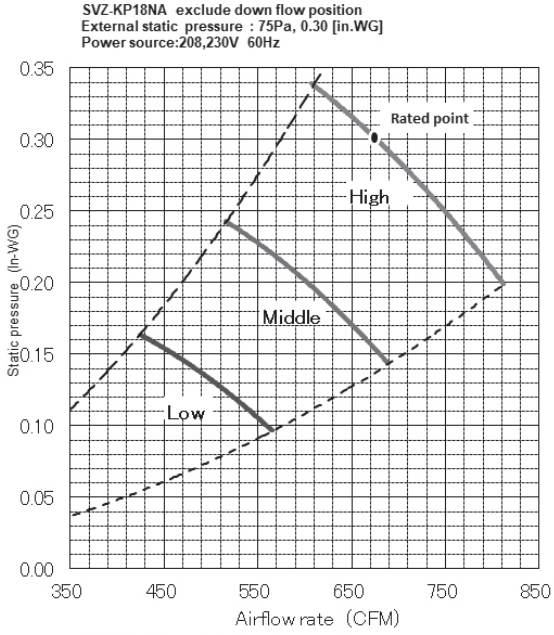

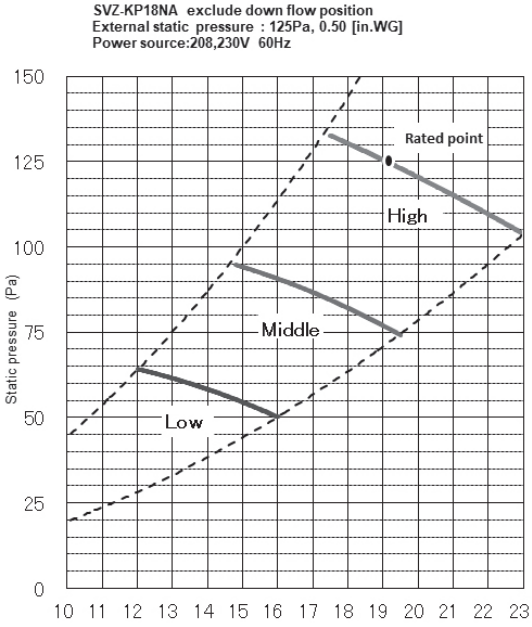

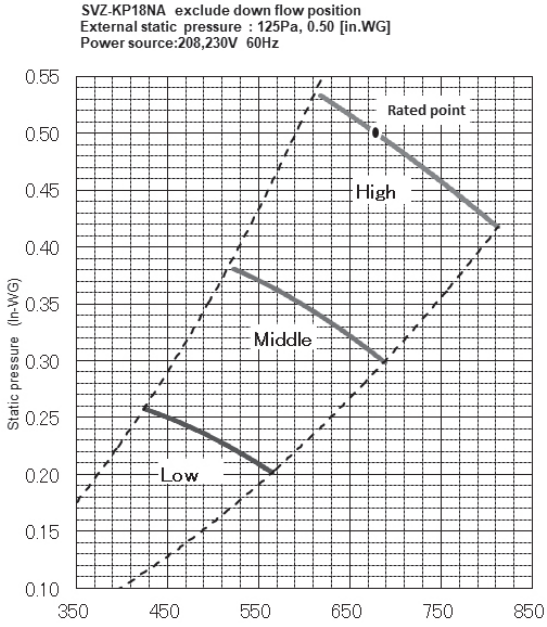

Specifications are subject to change without notice.

SVZ-KP18NA

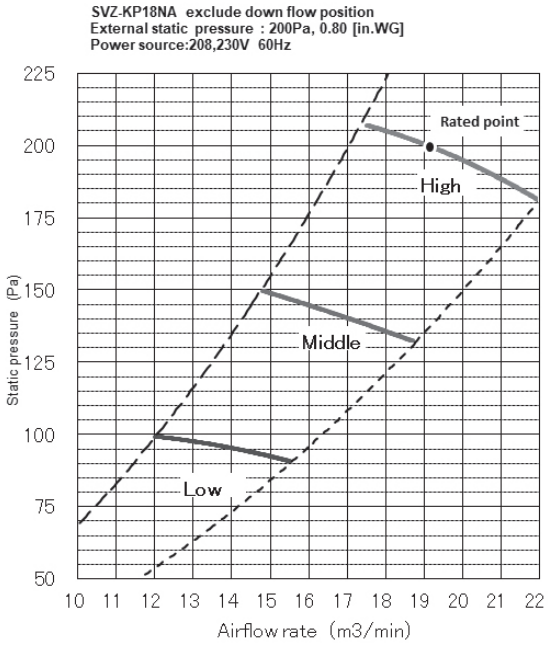

*. 200 Pa (0.80 in WG) does not have "Rated point".

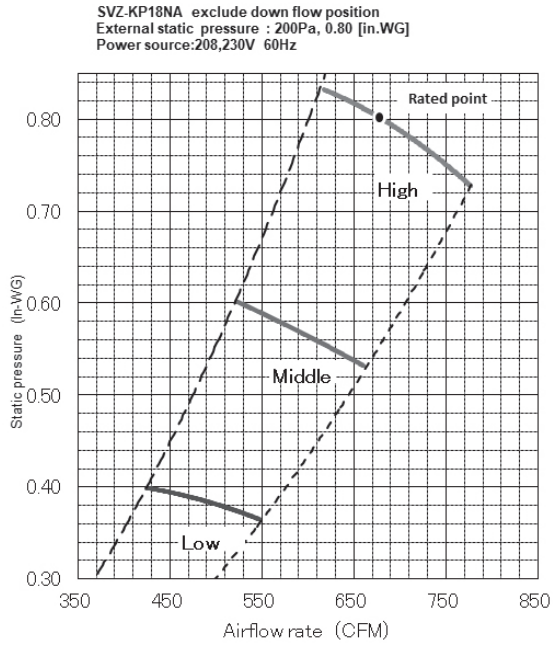

*. 200 Pa (0.80 in WG) does not have "Rated point".

Air Filter

SVZ-KP12, 18NA

Power source:208/230V 60Hz

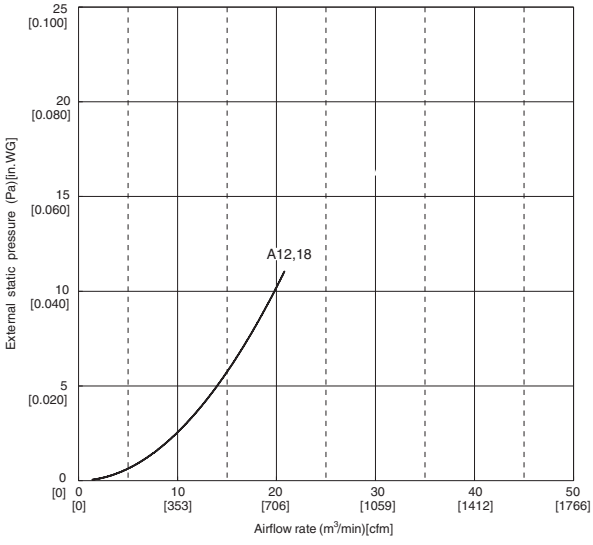

10 NOISE CRITERION CURVES

10-1. INDOOR UNIT

MSZ-GL09NA

NOTCH	SPL(dB(A))	LINE
COOLING(SHi)	43	●——●
HEATING(SHi)	43	○——○

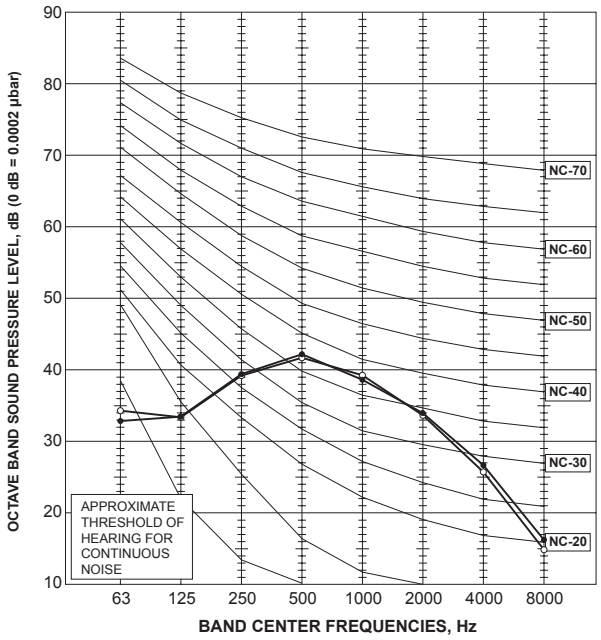

MSZ-GL12NA

NOTCH	SPL(dB(A))	LINE
COOLING(SHi)	45	●——●
HEATING(SHi)	43	○——○

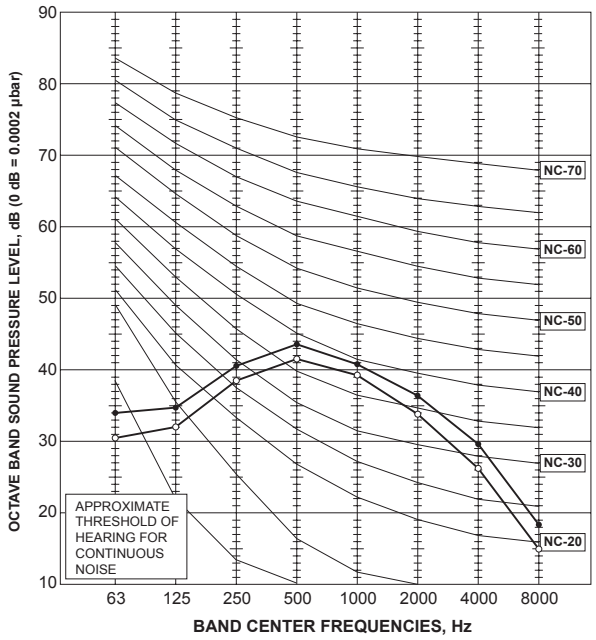

MSZ-GL15NA

NOTCH	SPL(dB(A))	LINE
COOLING(SHi)	49	●——●
HEATING(SHi)	46	○——○

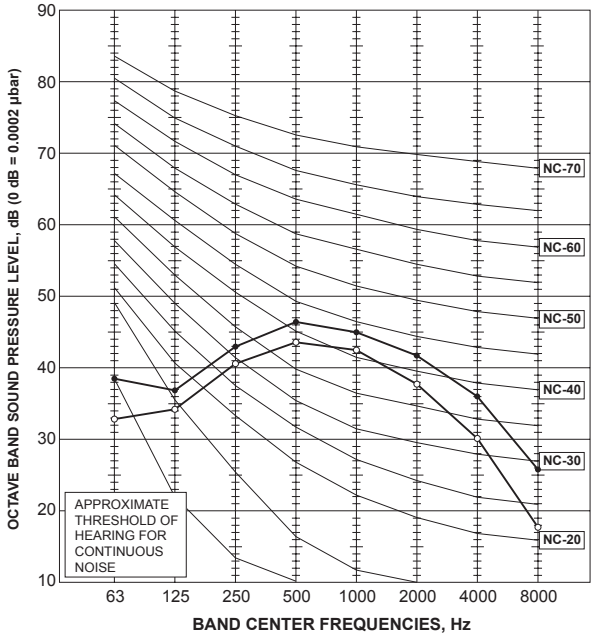

MSZ-GL18NA

NOTCH	SPL(dB(A))	LINE
COOLING(SHi)	49	●——●
HEATING(SHi)	48	○——○

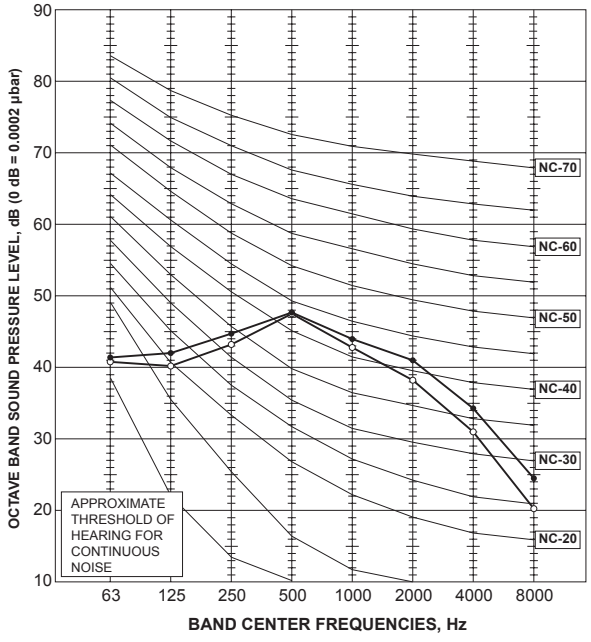

NOTE: The sound level is measured in an anechoic room where echoes are few, when compressor stops. The sound may be bigger than displayed level under actual installation condition by surrounding echoes. The sound level can be higher by about 2 dB than the displayed level during cooling and heating operation.

MSZ-GL24NA

NOTCH	SPL(dB(A))	LINE
COOLING(Rated)	53	●——●
HEATING(Rated)	53	○——○

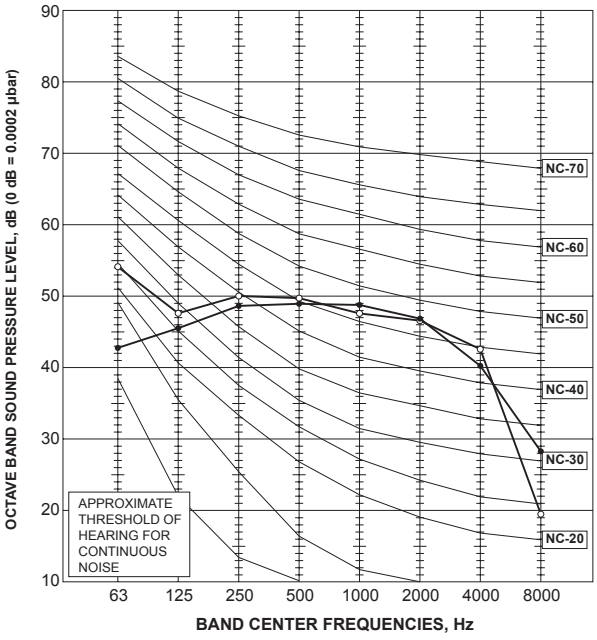

MSY-GL09NA

NOTCH	SPL(dB(A))	LINE
COOLING(SHi)	43	●——●
HEATING(SHi)	–	○——○

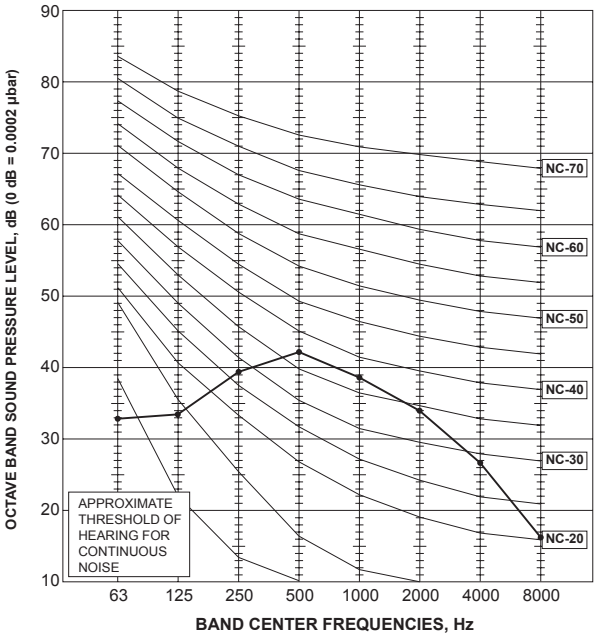

MSY-GL12NA

NOTCH	SPL(dB(A))	LINE
COOLING(SHi)	45	●——●
HEATING(SHi)	–	○——○

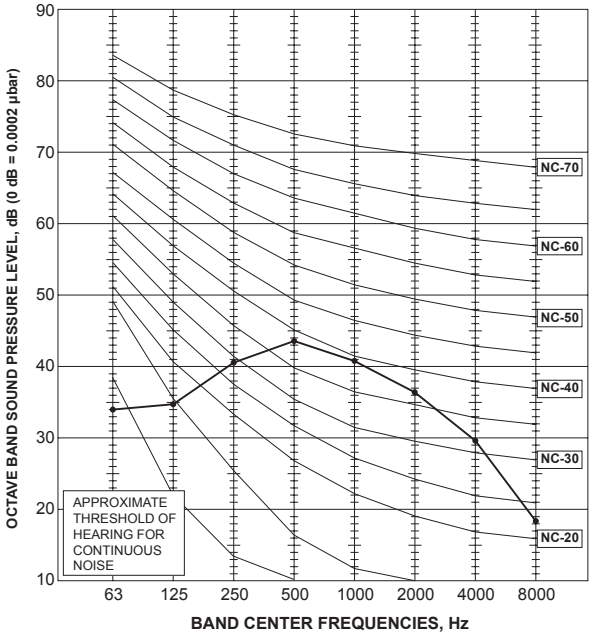

MSY-GL15NA

NOTCH	SPL(dB(A))	LINE
COOLING(SHi)	49	●——●
HEATING(SHi)	–	○——○

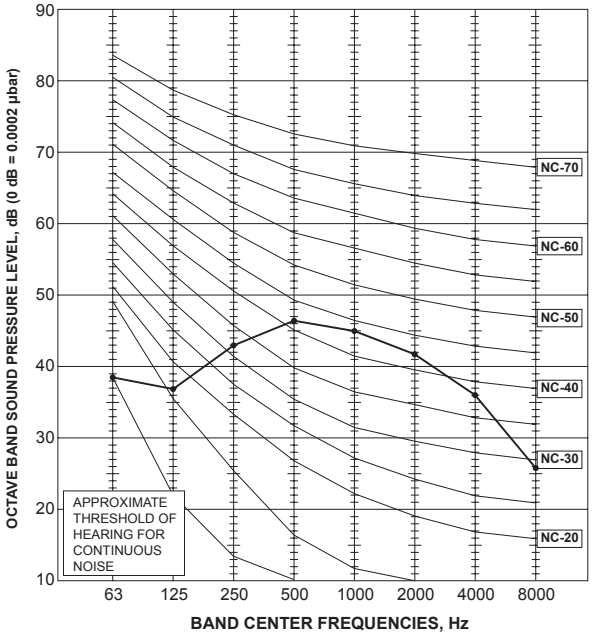

NOTE: The sound level is measured in an anechoic room where echoes are few, when compressor stops. The sound may be bigger than displayed level under actual installation condition by surrounding echoes. The sound level can be higher by about 2 dB than the displayed level during cooling and heating operation.

MSY-GL18NA

NOTCH	SPL(dB(A))	LINE
COOLING(SHi)	49	●——●
HEATING(SHi)	–	○——○

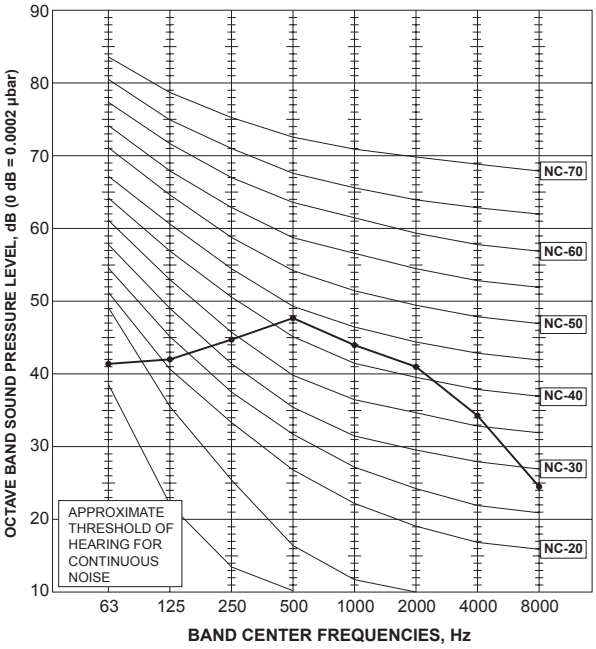

MSY-GL24NA

NOTCH	SPL(dB(A))	LINE
COOLING(Rated)	53	●——●
HEATING(Rated)	–	○——○

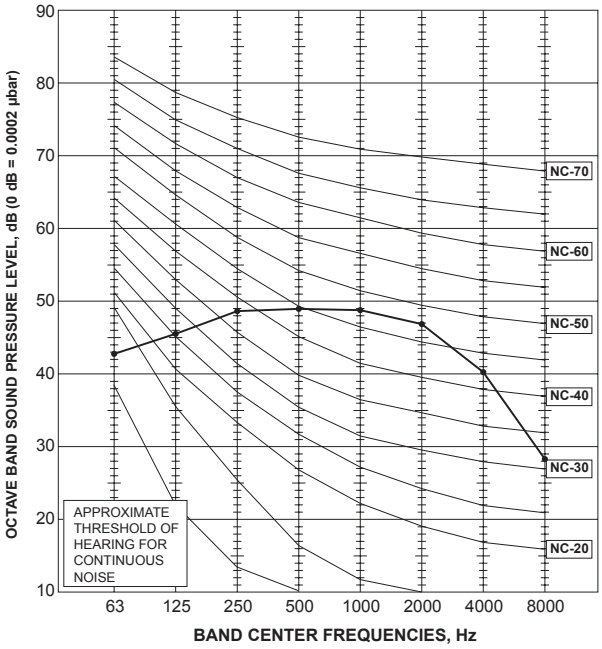

MSZ-HM09NA

NOTCH	SPL(dB(A))	LINE
COOLING(SHi)	43	●——●
HEATING(SHi)	43	○——○

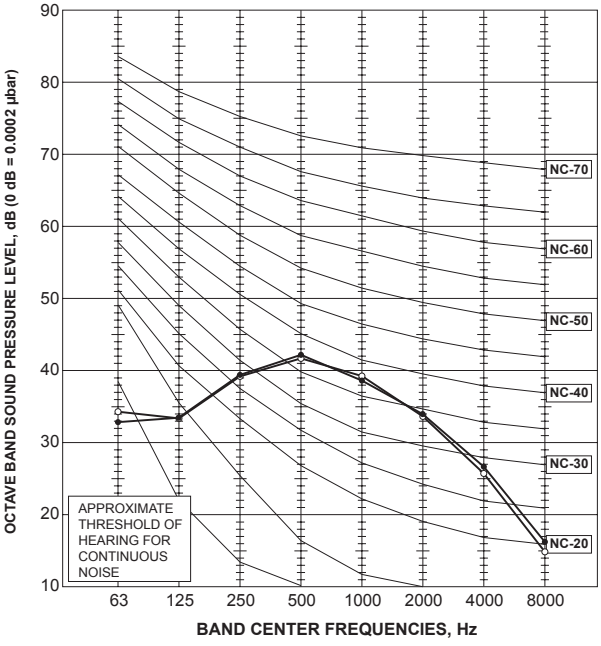

MSZ-HM12NA

NOTCH	SPL(dB(A))	LINE
COOLING(SHi)	45	●——●
HEATING(SHi)	43	○——○

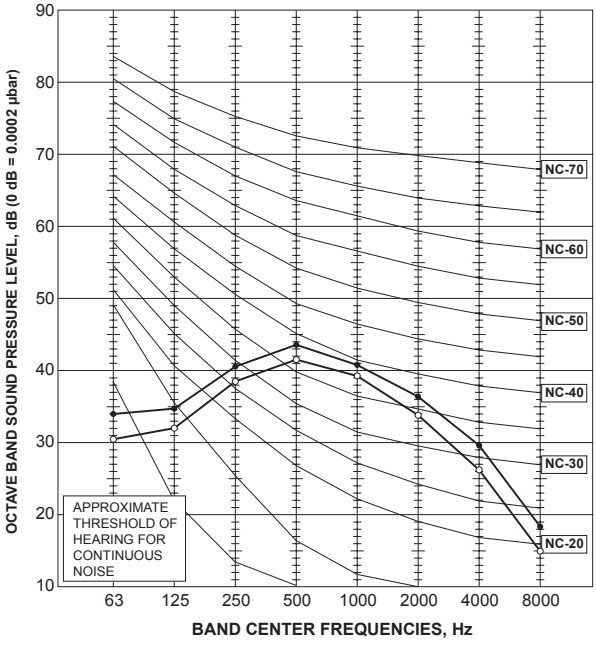

NOTE: The sound level is measured in an anechoic room where echoes are few, when compressor stops. The sound may be bigger than displayed level under actual installation condition by surrounding echoes. The sound level can be higher by about 2 dB than the displayed level during cooling and heating operation.

MSZ-HM15NA

NOTCH	SPL(dB(A))	LINE
COOLING(SHi)	49	●——●
HEATING(SHi)	46	○——○

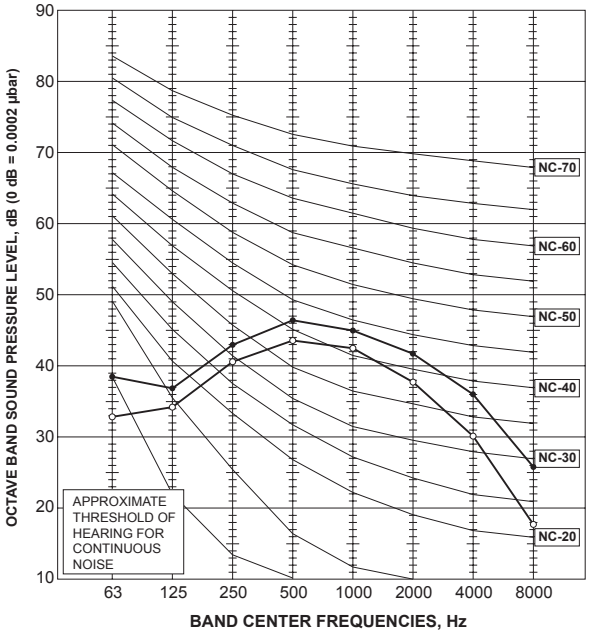

MSZ-HM18NA

NOTCH	SPL(dB(A))	LINE
COOLING(SHi)	47	●——●
HEATING(SHi)	47	○——○

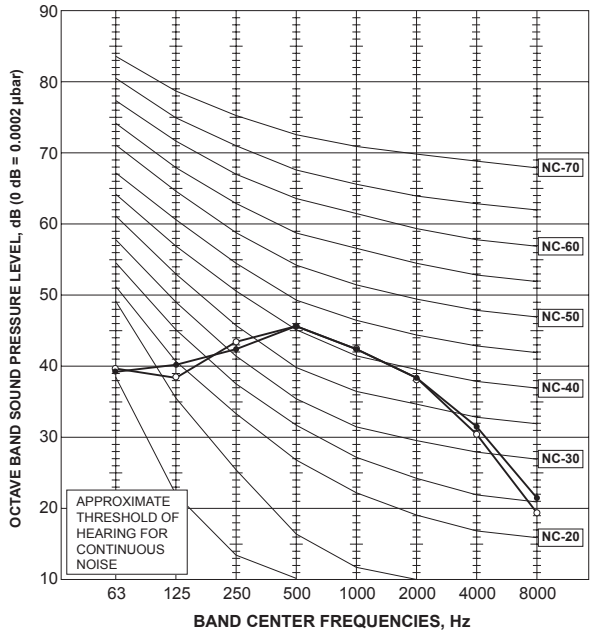

MSZ-HM24NA

NOTCH	SPL(dB(A))	LINE
COOLING(SHi)	50	●——●
HEATING(SHi)	50	○——○

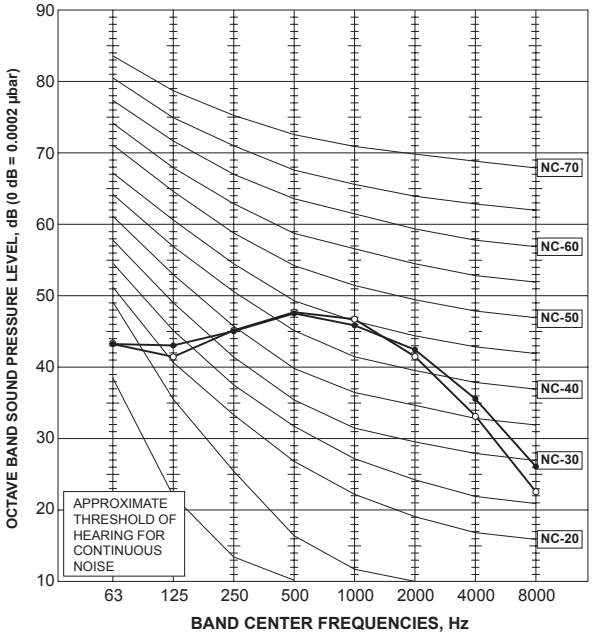

MSZ-FH06NA

NOTCH	SPL(dB(A))	LINE
COOLING(SHi)	40	●——●
HEATING(SHi)	42	○——○

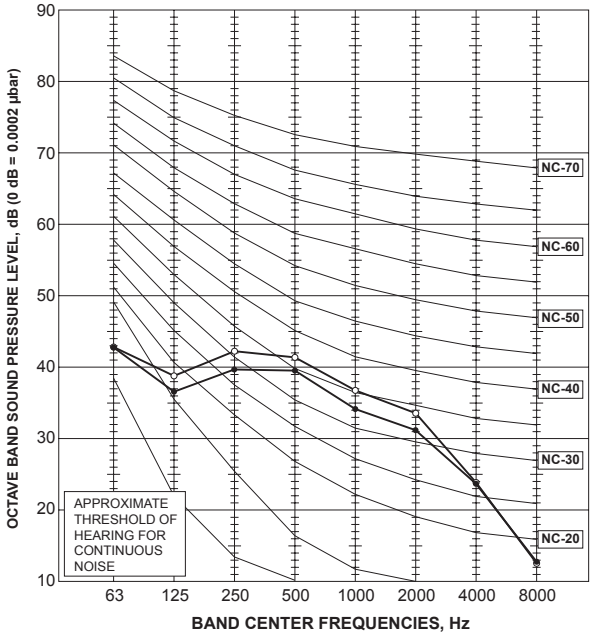

NOTE: The sound level is measured in an anechoic room where echoes are few, when compressor stops. The sound may be bigger than displayed level under actual installation condition by surrounding echoes. The sound level can be higher by about 2 dB than the displayed level during cooling and heating operation.

MSZ-FH09NA

NOTCH	SPL(dB(A))	LINE
COOLING(SHi)	40	●——●
HEATING(SHi)	42	○——○

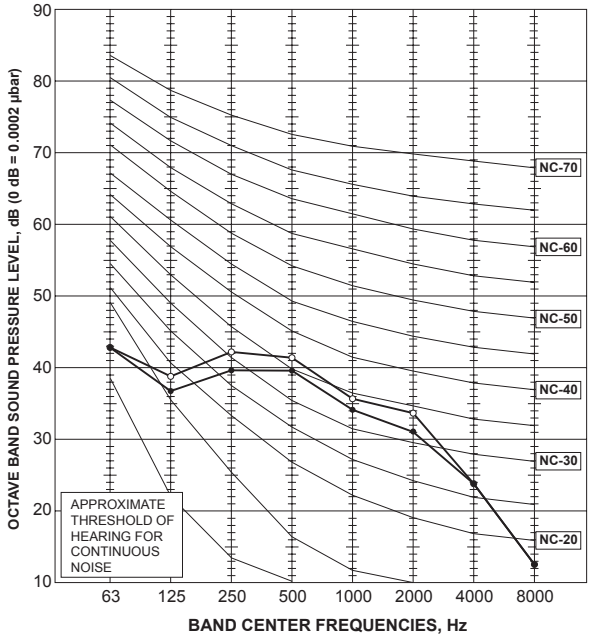

MSZ-FH12NA

NOTCH	SPL(dB(A))	LINE
COOLING(SHi)	41	●——●
HEATING(SHi)	42	○——○

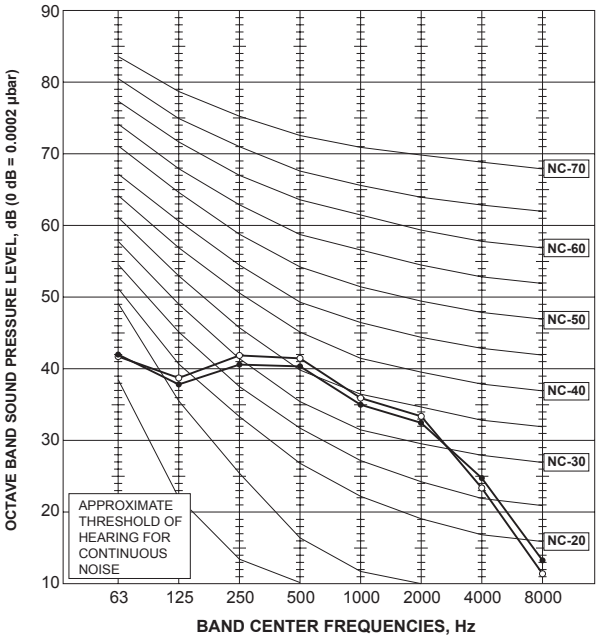

MSZ-FH15NA

NOTCH	SPL(dB(A))	LINE
COOLING(SHi)	44	●——●
HEATING(SHi)	46	○——○

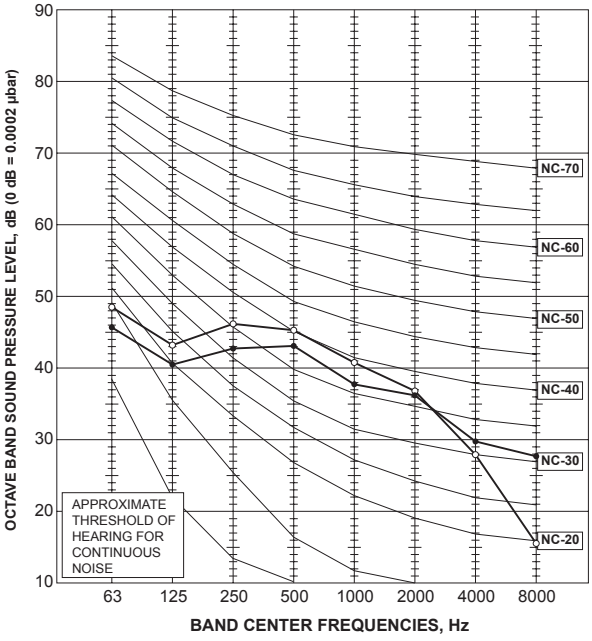

MSZ-FH18NA2

NOTCH	SPL(dB(A))	LINE
COOLING(SHi)	47	●——●
HEATING(SHi)	46	○——○

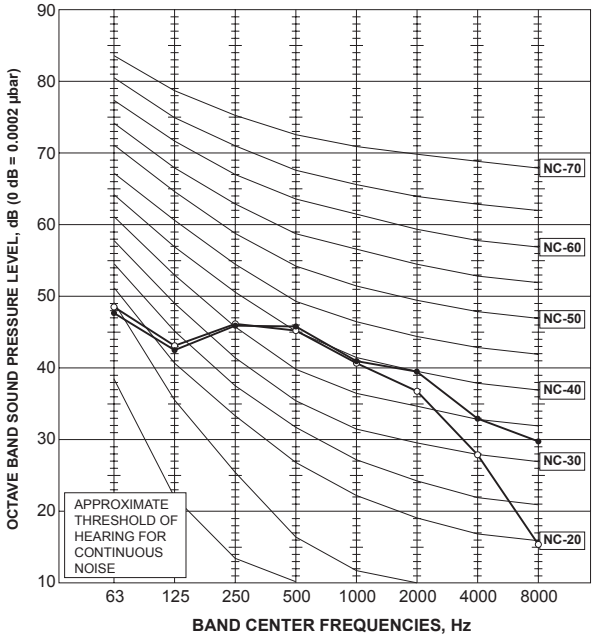

NOTE: The sound level is measured in an anechoic room where echoes are few, when compressor stops. The sound may be bigger than displayed level under actual installation condition by surrounding echoes. The sound level can be higher by about 2 dB than the displayed level during cooling and heating operation.

MSZ-FE09NA

NOTCH	SPL(dB(A))	LINE
COOLING(SHi)	39	●——●
HEATING(SHi)	40	○——○

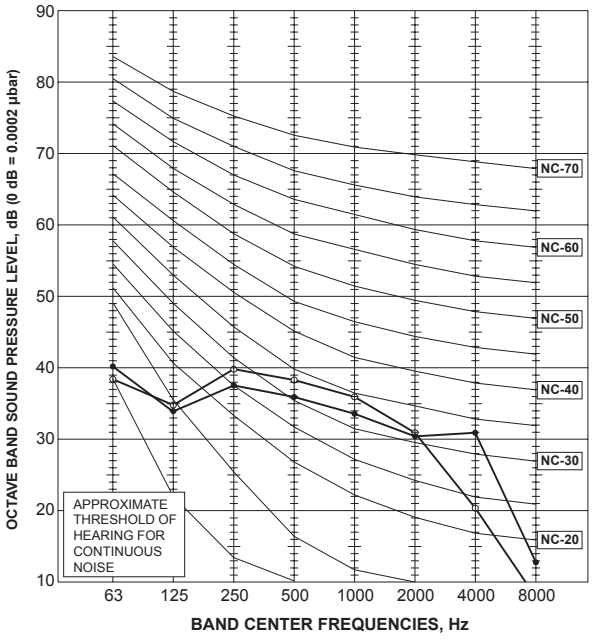

MSZ-FE12NA

NOTCH	SPL(dB(A))	LINE
COOLING(SHi)	43	●——●
HEATING(SHi)	43	○——○

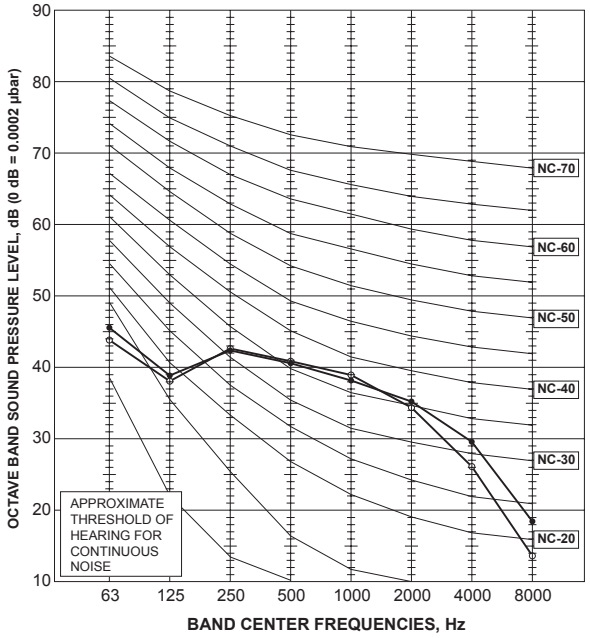

MSZ-D30NA
MSZ-D36NA
MSY-D30NA
MSY-D36NA

NOTCH	SPL(dB(A))	LINE
COOLING(Hi)	49	●——●
HEATING(Hi)		

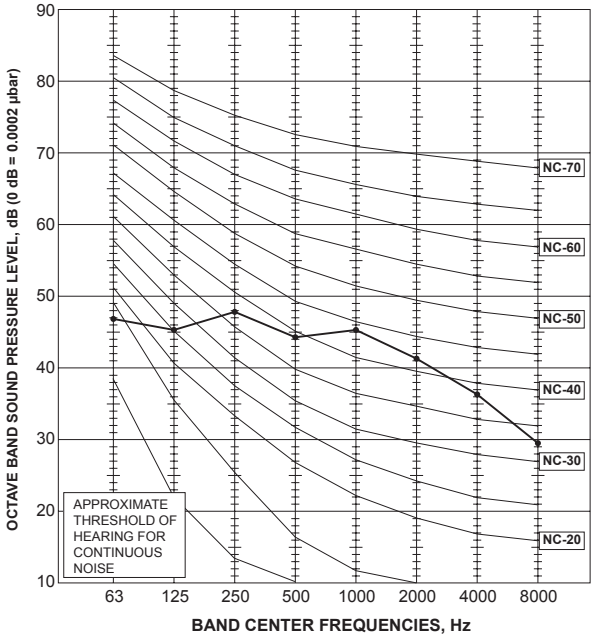

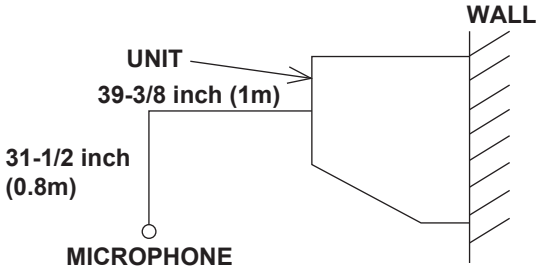

NOTE: The sound level is measured in an anechoic room where echoes are few, when compressor stops. The sound may be bigger than displayed level under actual installation condition by surrounding echoes. The sound level can be higher by about 2 dB than the displayed level during cooling and heating operation.

NOTE: The sound level is measured in an anechoic room where echoes are few, when compressor stops. The sound may be bigger than displayed level under actual installation condition by surrounding echoes.The sound level can be higher by about 2 dB than the displayed level during cooling and heating operation.

SEZ-KD09NA4

External static pressure:
0.02[in.WG](5Pa)

<60Hz>

NOTCH	SPL(dB)	LINE
High	29	
Middle	25	
Low	22	

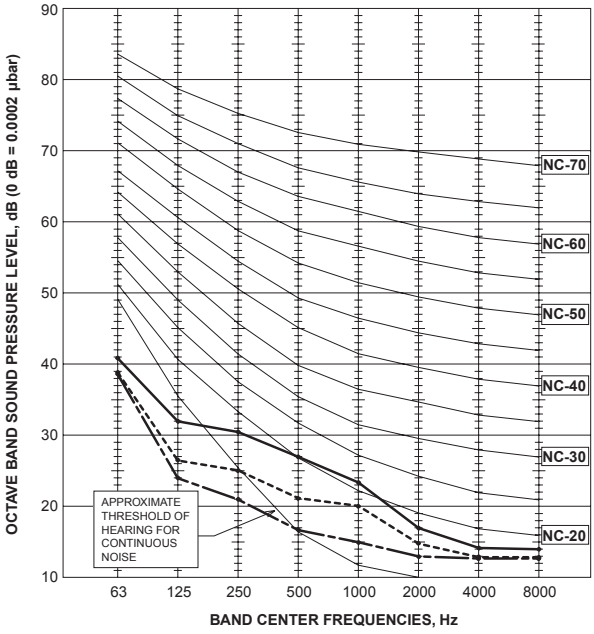

SEZ-KD09NA4

External static pressure:
0.06[in.WG](15Pa)

<60Hz>

NOTCH	SPL(dB)	LINE
High	30	
Middle	26	
Low	23	

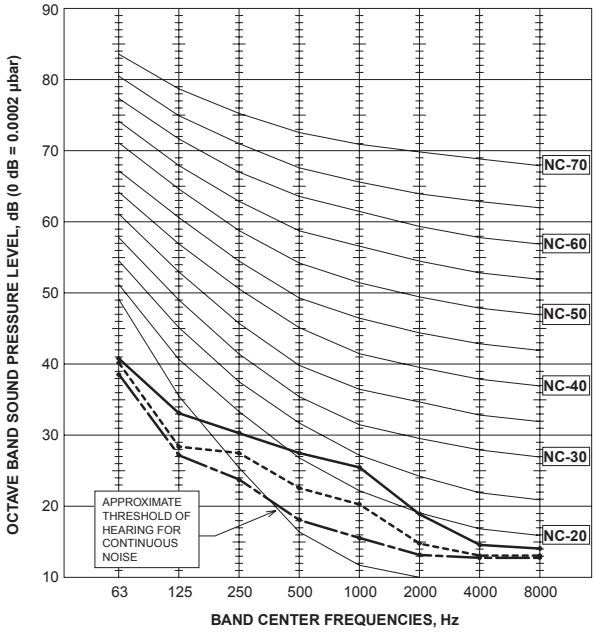

SEZ-KD09NA4

External static pressure:
0.14[in.WG](35Pa)

<60Hz>

NOTCH	SPL(dB)	LINE
High	31	
Middle	28	
Low	24	

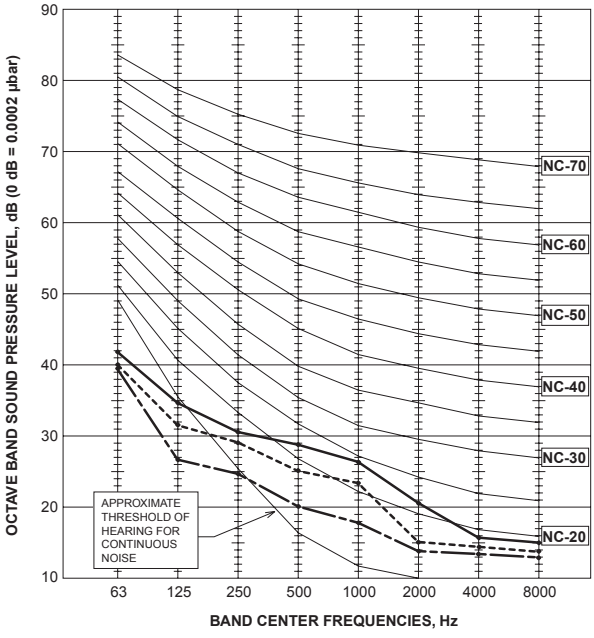

SEZ-KD09NA4

External static pressure:
0.20[in.WG](50Pa)

<60Hz>

NOTCH	SPL(dB)	LINE
High	33	
Middle	29	
Low	25	

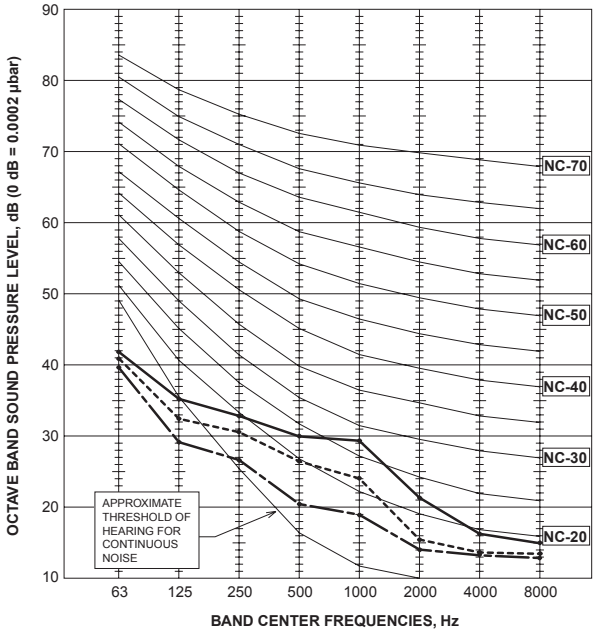

NOTE: The sound level is measured in an anechoic room where echoes are few, when compressor stops. The sound may be bigger than displayed level under actual installation condition by surrounding echoes. The sound level can be higher by about 2 dB than the displayed level during cooling and heating operation.

SEZ-KD12NA4

External static pressure:
0.02[in.WG](5Pa)

<60Hz>

NOTCH	SPL(dB)	LINE
High	33	
Middle	28	
Low	23	

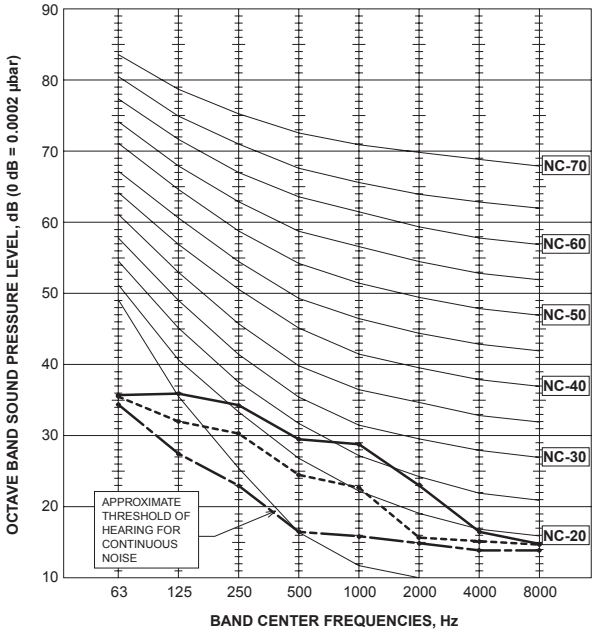

SEZ-KD12NA4

External static pressure:
0.06[in.WG](15Pa)

<60Hz>

NOTCH	SPL(dB)	LINE
High	33	
Middle	28	
Low	23	

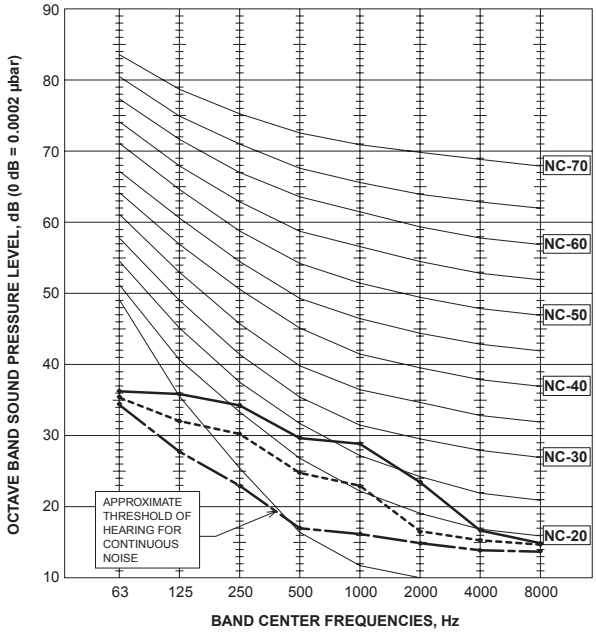

SEZ-KD12NA4

External static pressure:
0.14[in.WG](35Pa)

<60Hz>

NOTCH	SPL(dB)	LINE
High	34	
Middle	29	
Low	24	

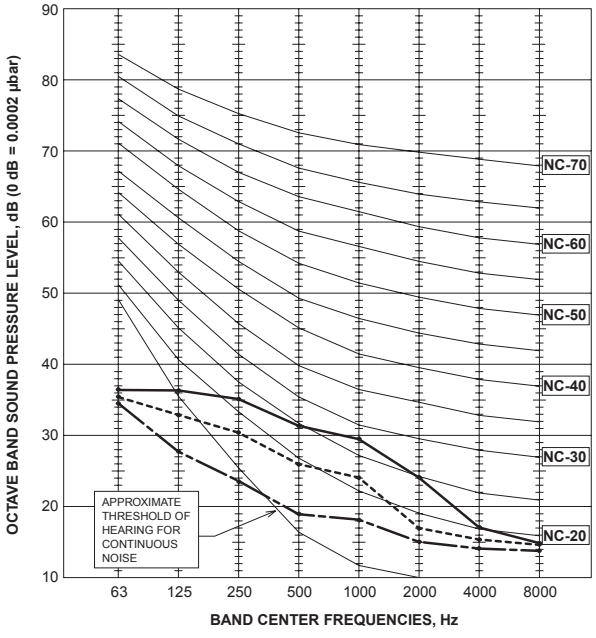

SEZ-KD12NA4

External static pressure:
0.20[in.WG](50Pa)

<60Hz>

NOTCH	SPL(dB)	LINE
High	35	
Middle	31	
Low	25	

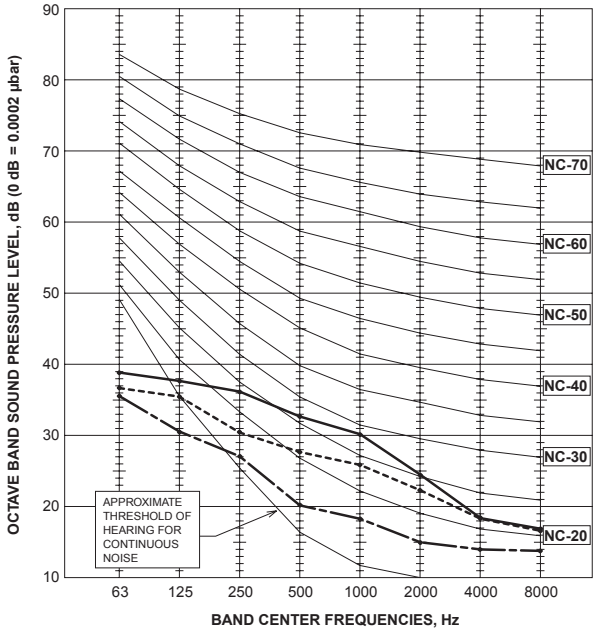

NOTE: The sound level is measured in an anechoic room where echoes are few, when compressor stops. The sound may be bigger than displayed level under actual installation condition by surrounding echoes. The sound level can be higher by about 2 dB than the displayed level during cooling and heating operation.

SEZ-KD15NA4

External static pressure:
0.02[in.WG](5Pa)

<60Hz>

NOTCH	SPL(dB)	LINE
High	36	
Middle	33	
Low	29	

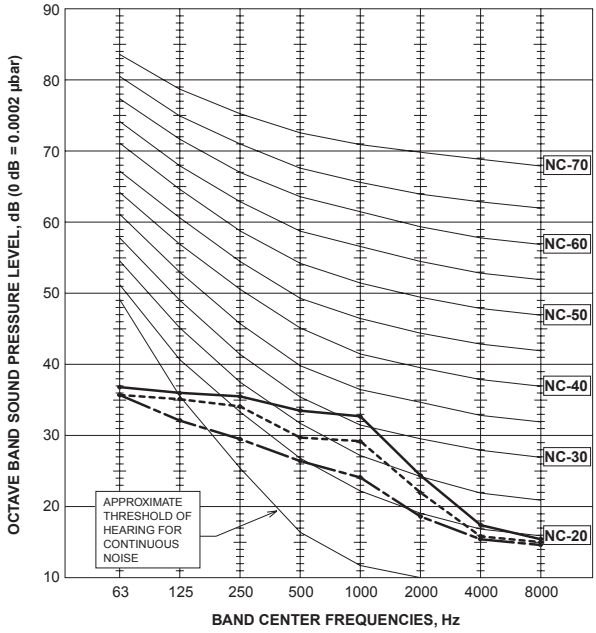

SEZ-KD15NA4

External static pressure:
0.06[in.WG](15Pa)

<60Hz>

NOTCH	SPL(dB)	LINE
High	37	
Middle	34	
Low	30	

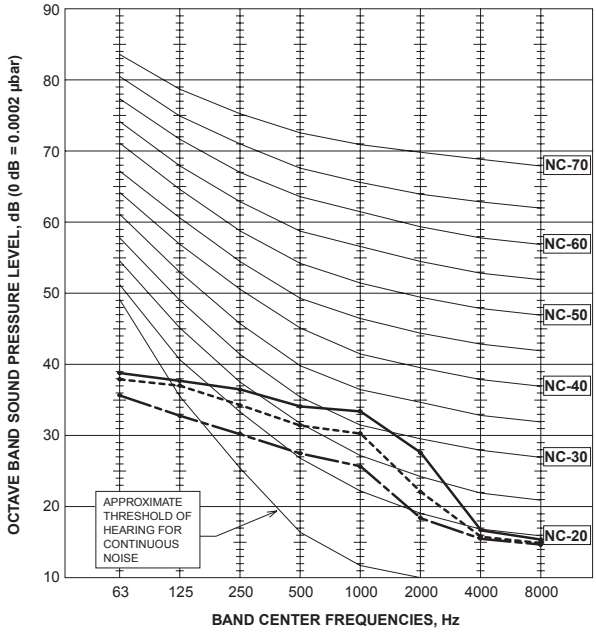

SEZ-KD15NA4

External static pressure:
0.14[in.WG](35Pa)

<60Hz>

NOTCH	SPL(dB)	LINE
High	38	
Middle	35	
Low	31	

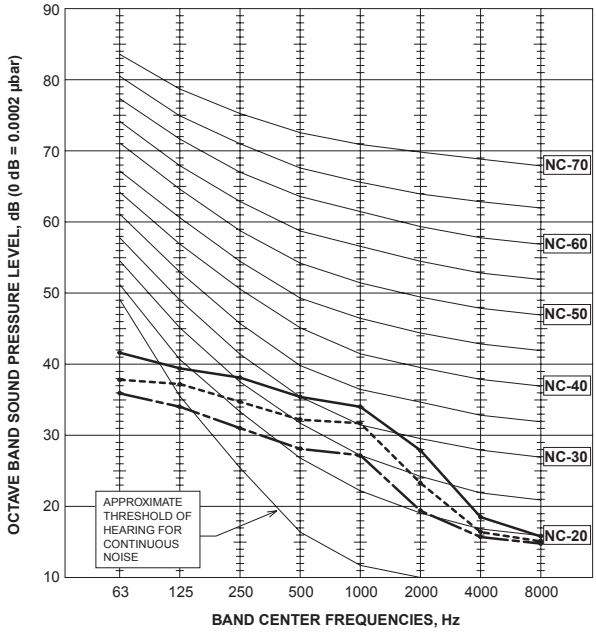

SEZ-KD15NA4

External static pressure:
0.20[in.WG](50Pa)

<60Hz>

NOTCH	SPL(dB)	LINE
High	39	
Middle	36	
Low	32	

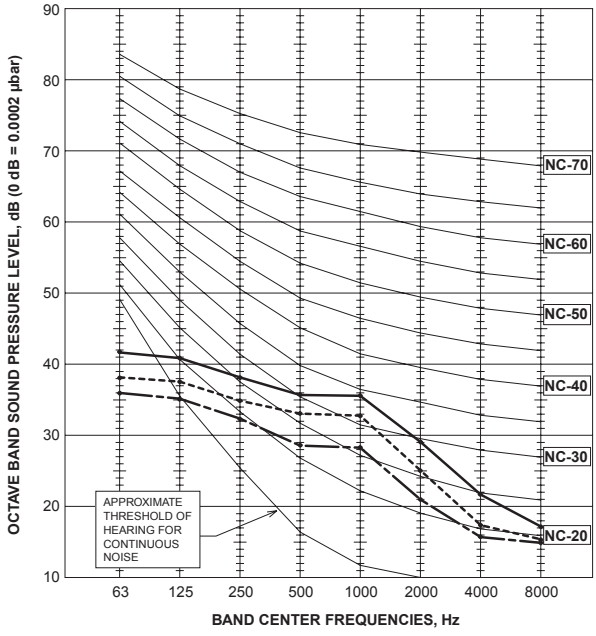

NOTE: The sound level is measured in an anechoic room where echoes are few, when compressor stops. The sound may be bigger than displayed level under actual installation condition by surrounding echoes. The sound level can be higher by about 2 dB than the displayed level during cooling and heating operation.

SEZ-KD18NA4

External static pressure:
0.02[in.WG](5Pa)

<60Hz>

NOTCH	SPL(dB)	LINE
High	37	
Middle	33	
Low	29	

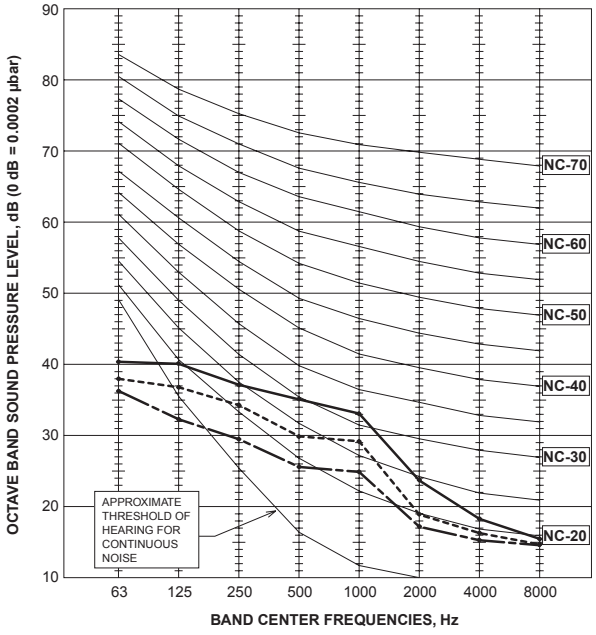

SEZ-KD18NA4

External static pressure:
0.06[in.WG](15Pa)

<60Hz>

NOTCH	SPL(dB)	LINE
High	38	
Middle	34	
Low	30	

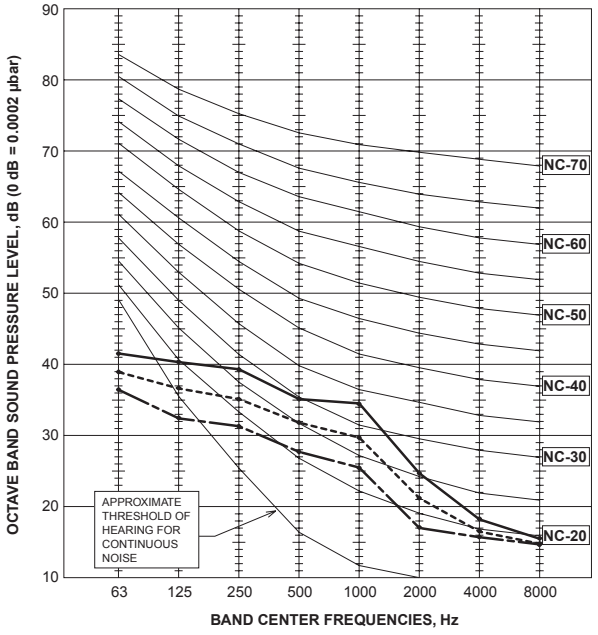

SEZ-KD18NA4

External static pressure:
0.14[in.WG](35Pa)

<60Hz>

NOTCH	SPL(dB)	LINE
High	39	
Middle	35	
Low	31	

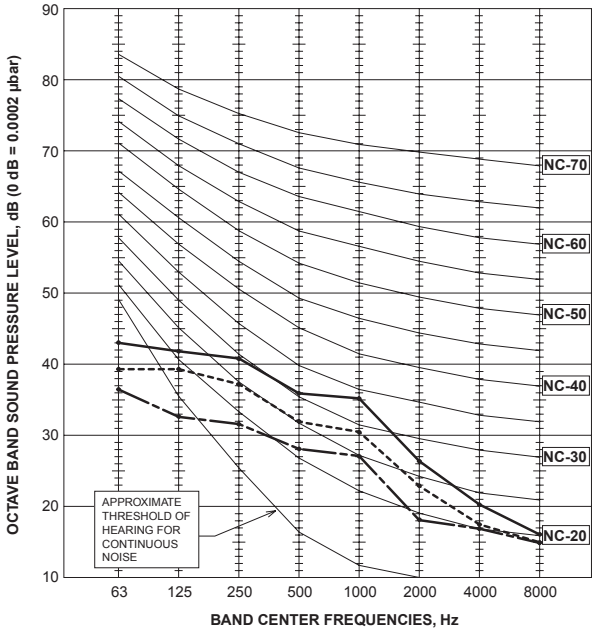

SEZ-KD18NA4

External static pressure:
0.20[in.WG](50Pa)

<60Hz>

NOTCH	SPL(dB)	LINE
High	39	
Middle	36	
Low	32	

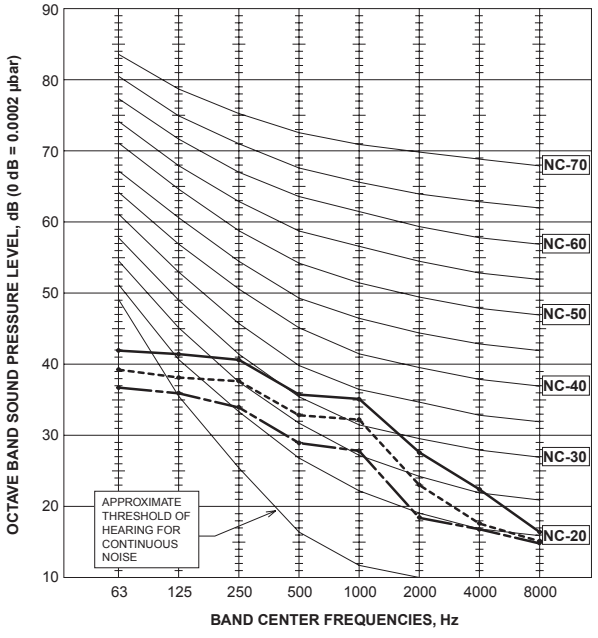

NOTE: The sound level is measured in an anechoic room where echoes are few, when compressor stops. The sound may be bigger than displayed level under actual installation condition by surrounding echoes. The sound level can be higher by about 2 dB than the displayed level during cooling and heating operation.

SLZ-KA09NA

NOTCH	SPL(dB)	LINE
High	38	○——○
Medium	22	△——△
Low	29	□——□

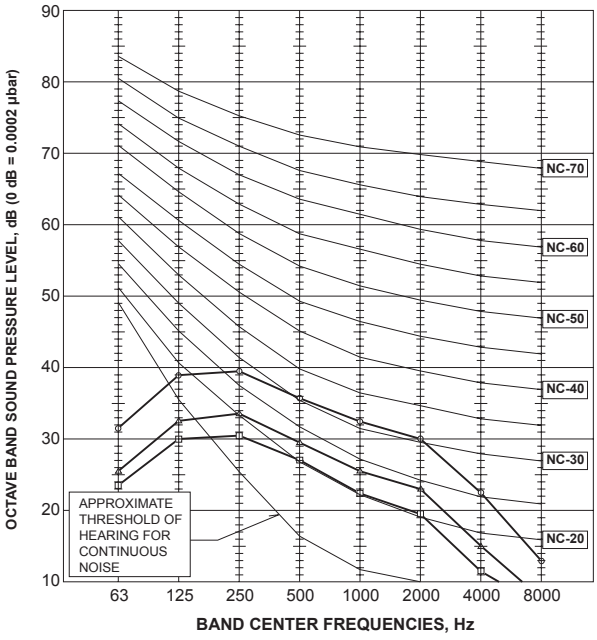

SLZ-KA12NA

NOTCH	SPL(dB)	LINE
High	39	○——○
Medium	40	△——△
Low	30	□——□

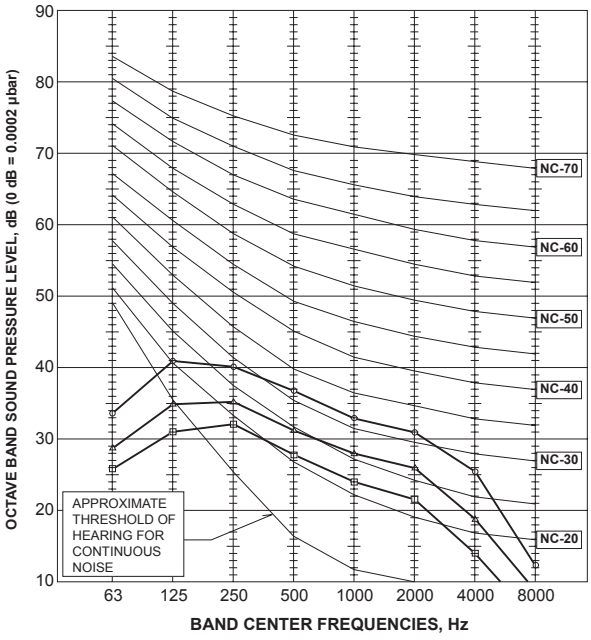

SLZ-KA15NA

NOTCH	SPL(dB)	LINE
High	40	○——○
Medium	35	△——△
Low	31	□——□

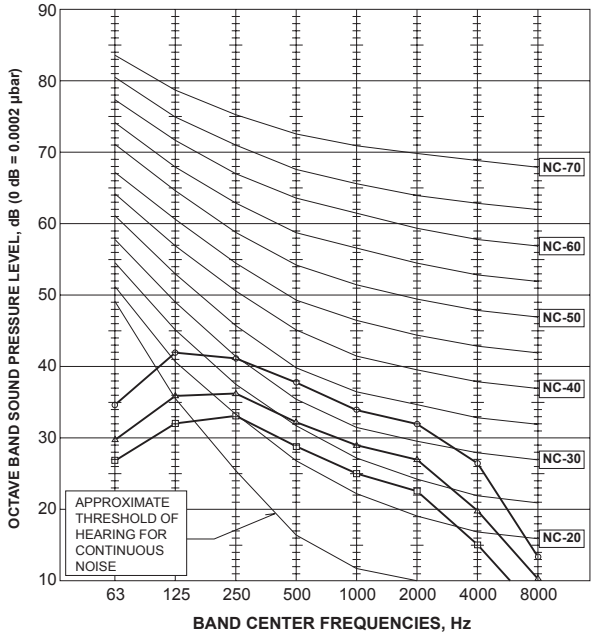

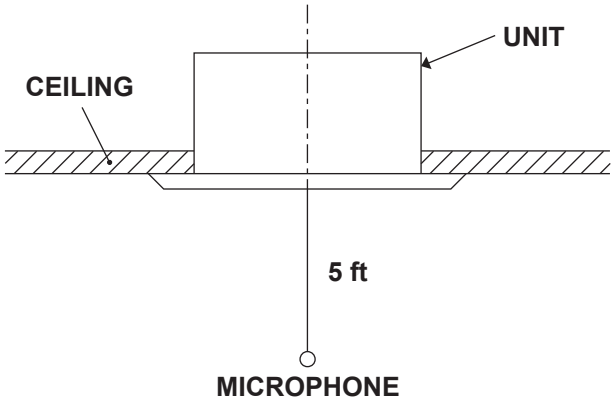

PEAD-A09AA7

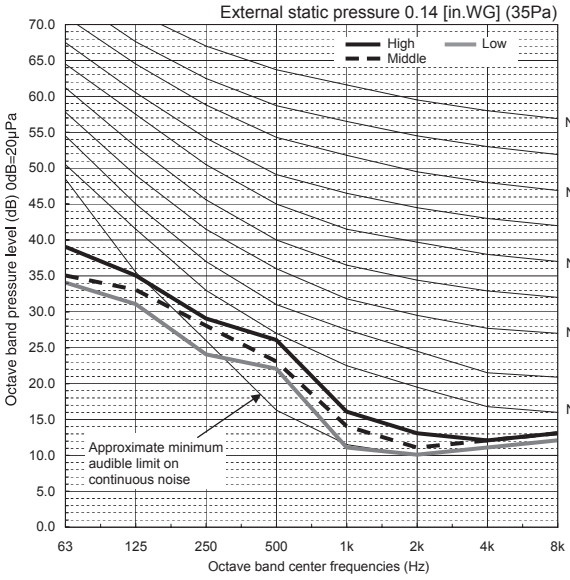
External static pressure 0.14 [in.WG] (35Pa)
High
Middle
Low
NC-60
NC-50
NC-40
NC-30
NC-20
Approximate minimum audible limit on continuous noise
Octave band pressure level (dB) 0dB=20μPa
Octave band center frequencies (Hz)
63
125
250
500
1k
2k
4k
8k

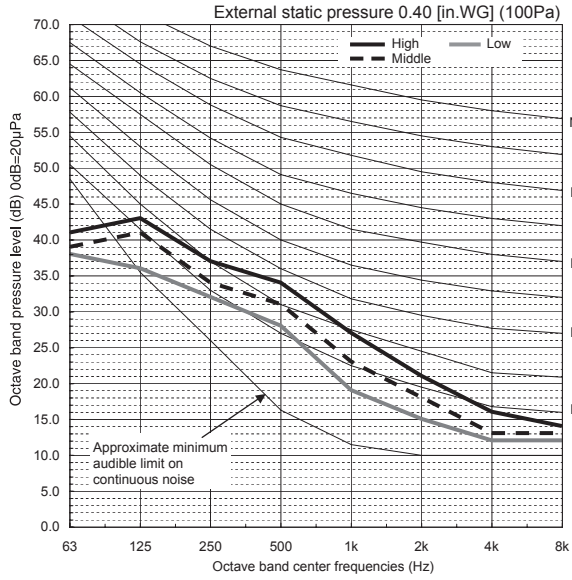
External static pressure 0.40 [in.WG] (100Pa)
High
Middle
Low
NC-60
NC-50
NC-40
NC-30
NC-20
Approximate minimum audible limit on continuous noise
Octave band pressure level (dB) 0dB=20μPa
Octave band center frequencies (Hz)
63
125
250
500
1k
2k
4k
8k

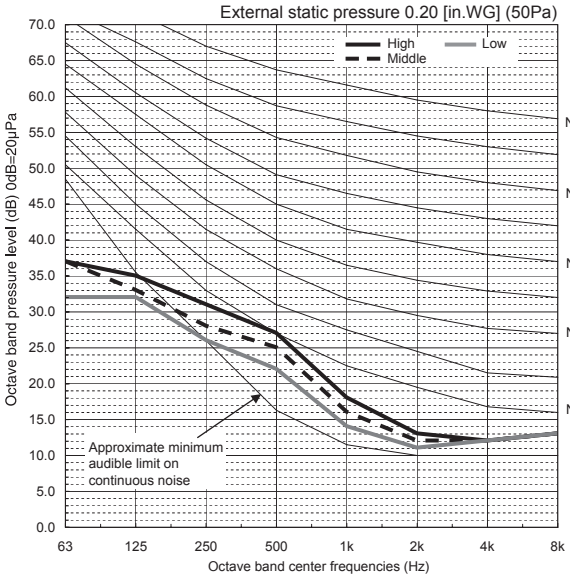
External static pressure 0.20 [in.WG] (50Pa)
High
Middle
Low
NC-60
NC-50
NC-40
NC-30
NC-20
Approximate minimum audible limit on continuous noise
Octave band pressure level (dB) 0dB=20μPa
Octave band center frequencies (Hz)
63
125
250
500
1k
2k
4k
8k

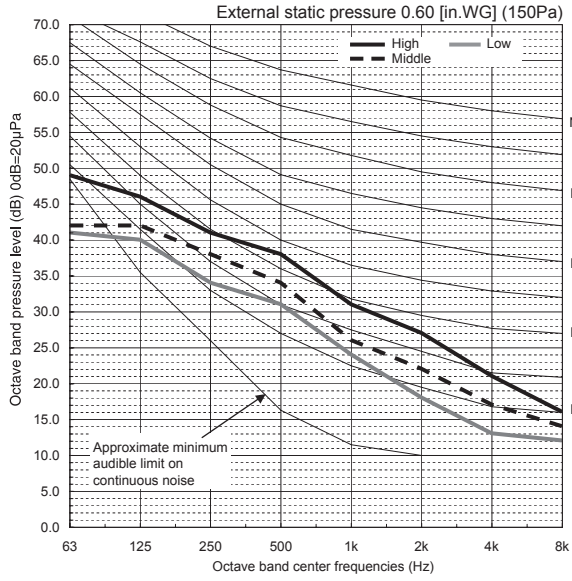
External static pressure 0.60 [in.WG] (150Pa)
High
Middle
Low
NC-60
NC-50
NC-40
NC-30
NC-20
Approximate minimum audible limit on continuous noise
Octave band pressure level (dB) 0dB=20μPa
Octave band center frequencies (Hz)
63
125
250
500
1k
2k
4k
8k

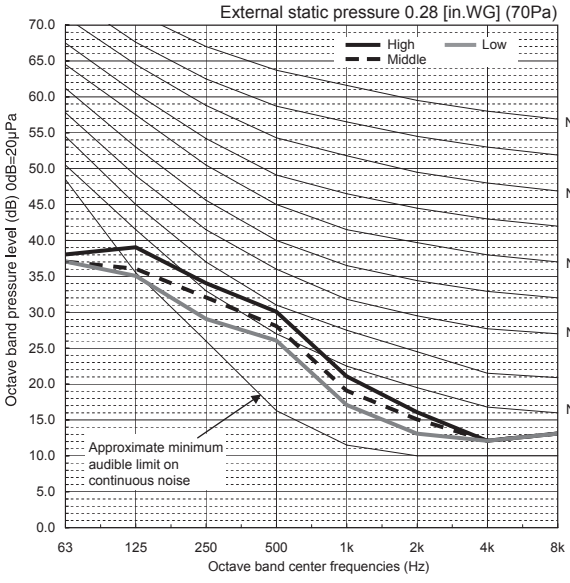
External static pressure 0.28 [in.WG] (70Pa)
High
Middle
Low
NC-60
NC-50
NC-40
NC-30
NC-20
Approximate minimum audible limit on continuous noise
Octave band pressure level (dB) 0dB=20μPa
Octave band center frequencies (Hz)
63
125
250
500
1k
2k
4k
8k

PEAD-A12AA7

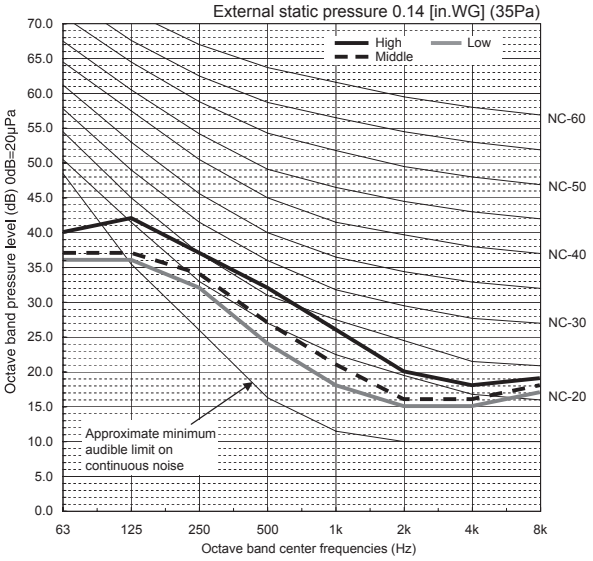
External static pressure 0.14 [in.WG] (35Pa)
High
Low
Middle
NC-60
NC-50
NC-40
NC-30
NC-20
Approximate minimum audible limit on continuous noise
Octave band pressure level (dB) 0dB=20μPa
Octave band center frequencies (Hz)
63
125
250
500
1k
2k
4k
8k

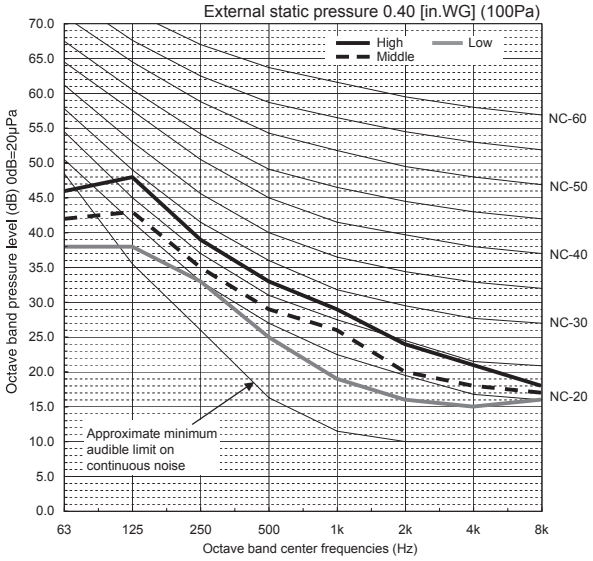
External static pressure 0.40 [in.WG] (100Pa)
High
Low
Middle
NC-60
NC-50
NC-40
NC-30
NC-20
Approximate minimum audible limit on continuous noise
Octave band pressure level (dB) 0dB=20μPa
Octave band center frequencies (Hz)
63
125
250
500
1k
2k
4k
8k

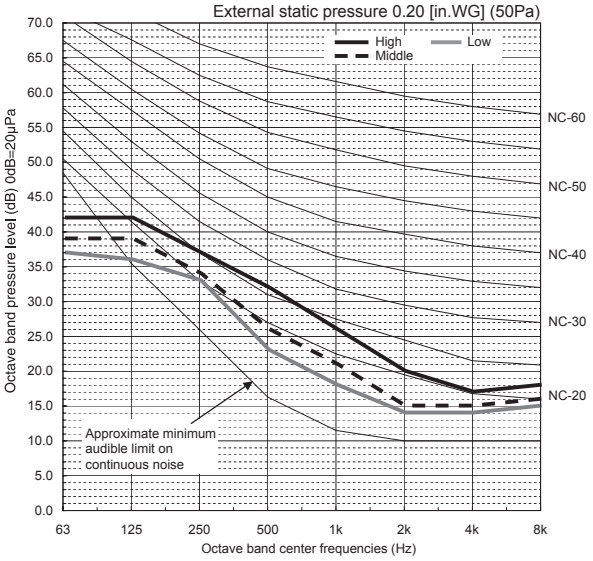
External static pressure 0.20 [in.WG] (50Pa)
High
Low
Middle
NC-60
NC-50
NC-40
NC-30
NC-20
Approximate minimum audible limit on continuous noise
Octave band pressure level (dB) 0dB=20μPa
Octave band center frequencies (Hz)
63
125
250
500
1k
2k
4k
8k

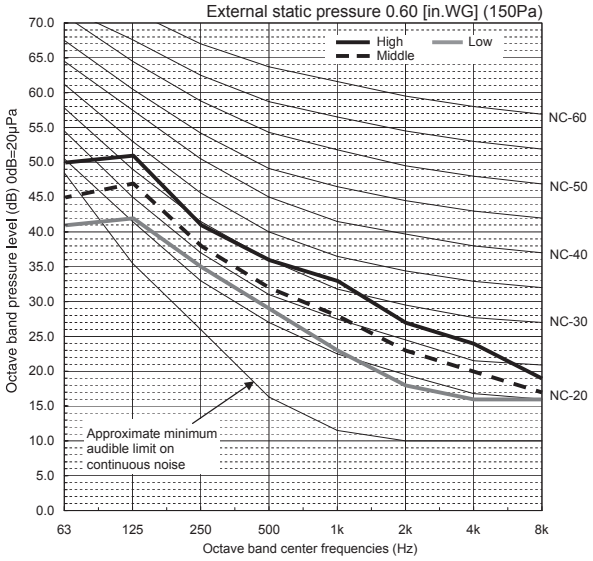
External static pressure 0.60 [in.WG] (150Pa)
High
Low
Middle
NC-60
NC-50
NC-40
NC-30
NC-20
Approximate minimum audible limit on continuous noise
Octave band pressure level (dB) 0dB=20μPa
Octave band center frequencies (Hz)
63
125
250
500
1k
2k
4k
8k

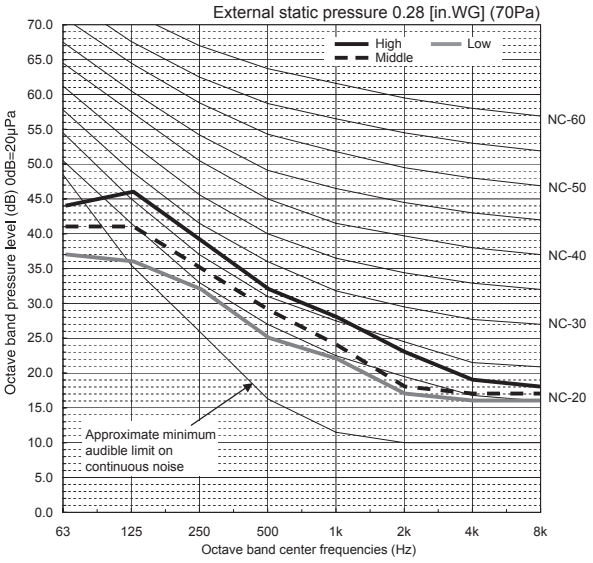
External static pressure 0.28 [in.WG] (70Pa)
High
Low
Middle
NC-60
NC-50
NC-40
NC-30
NC-20
Approximate minimum audible limit on continuous noise
Octave band pressure level (dB) 0dB=20μPa
Octave band center frequencies (Hz)
63
125
250
500
1k
2k
4k
8k

PEAD-A15AA7 PEAD-A18AA7

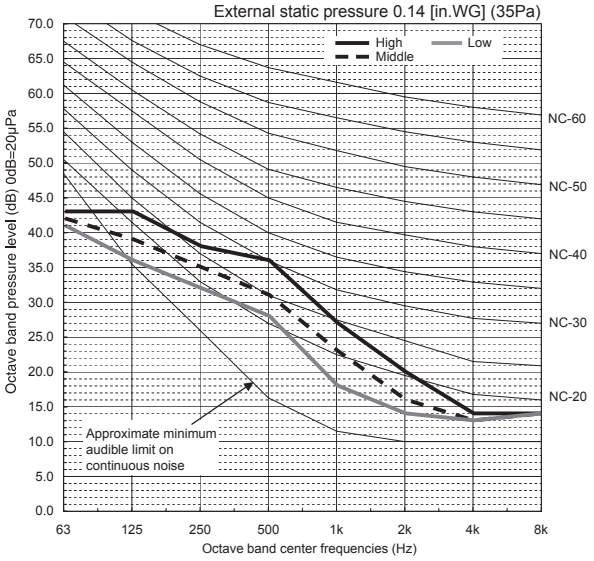

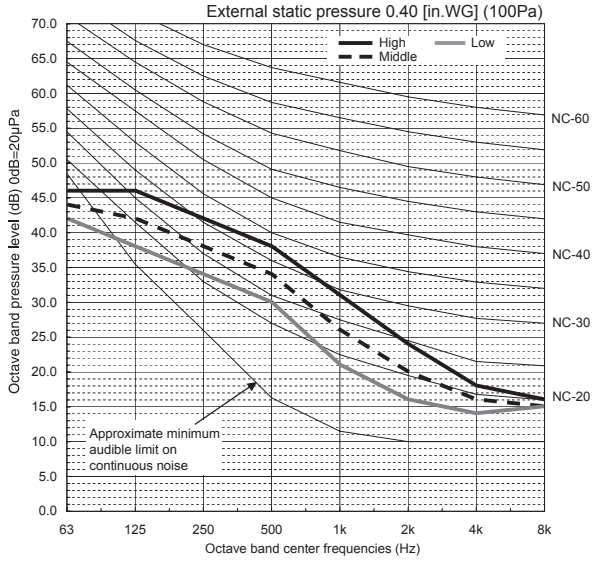

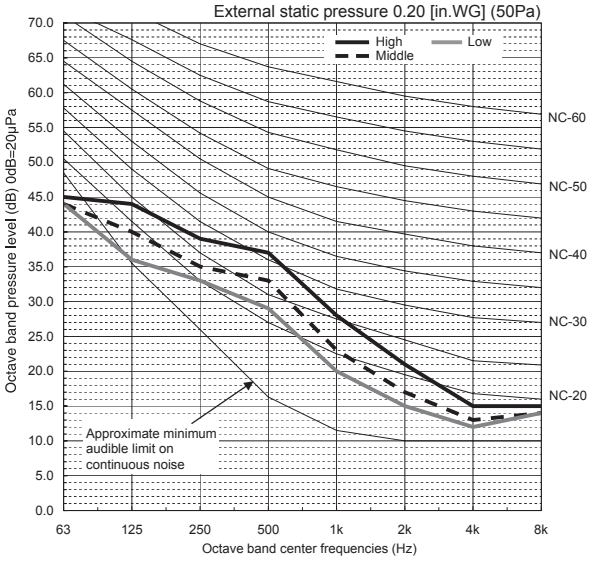

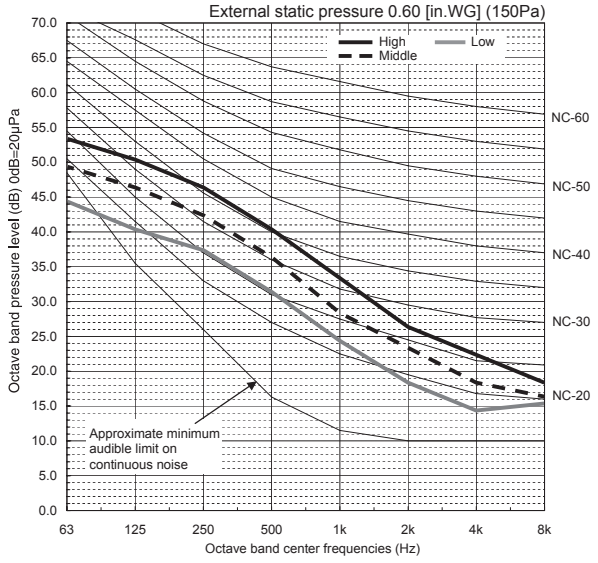

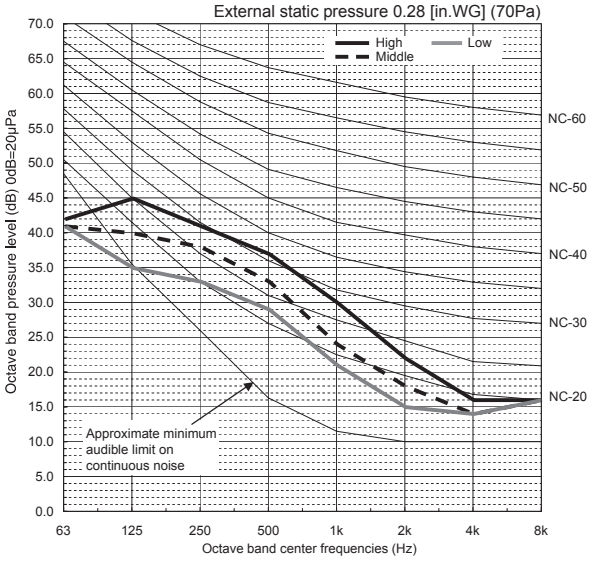

SVZ-KP12NA

Condition	Acale	LINE
High	36	——
Middle	34	- -
Low	28	——
-	-	- -

External Static Pressure : 0.3inWG. (75Pa)

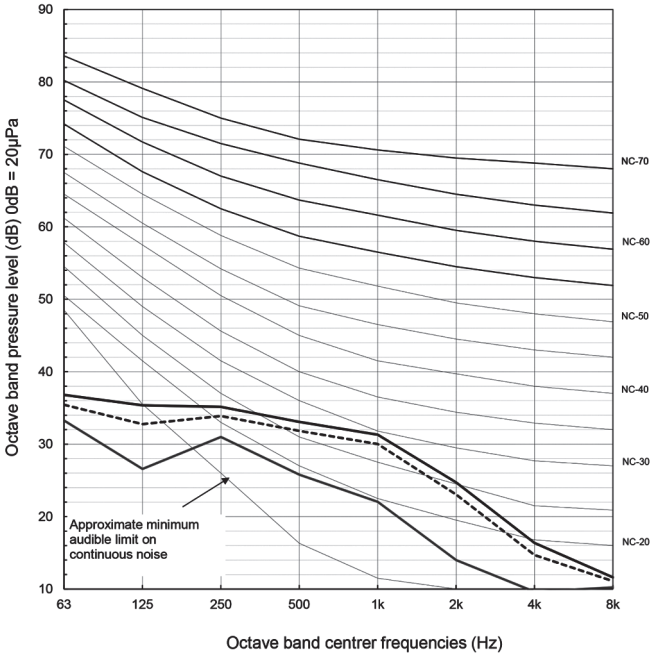

Condition	Acale	LINE
High	39	——
Middle	36	- -
Low	29	——
-	-	- -

External Static Pressure : 0.5inWG. (125Pa)

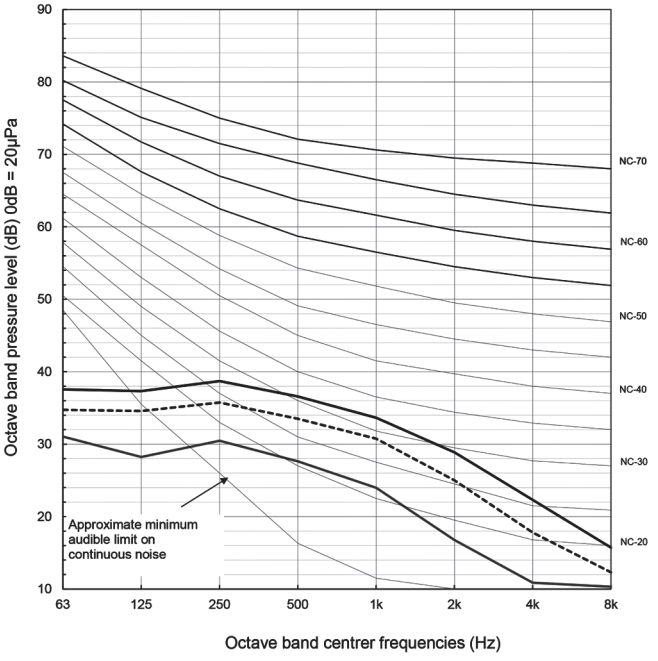

Condition	Acale	LINE
High	47	——
Middle	42	- -
Low	35	——
-	-	- -

External Static Pressure : 0.8inWG. (200Pa)

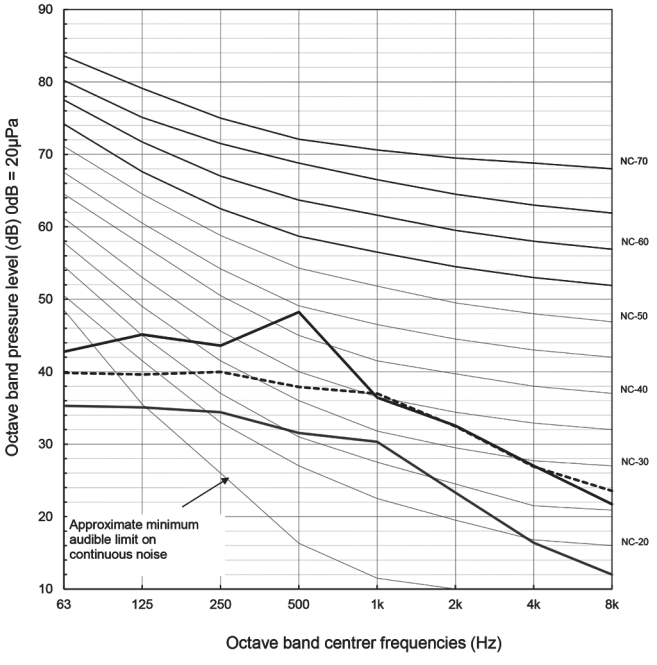

SVZ-KP18NA

Condition	Acale	LINE
High	36	——
Middle	35	- -
Low	31	——
-	-	- -

External Static Pressure : 0.3inWG. (75Pa)

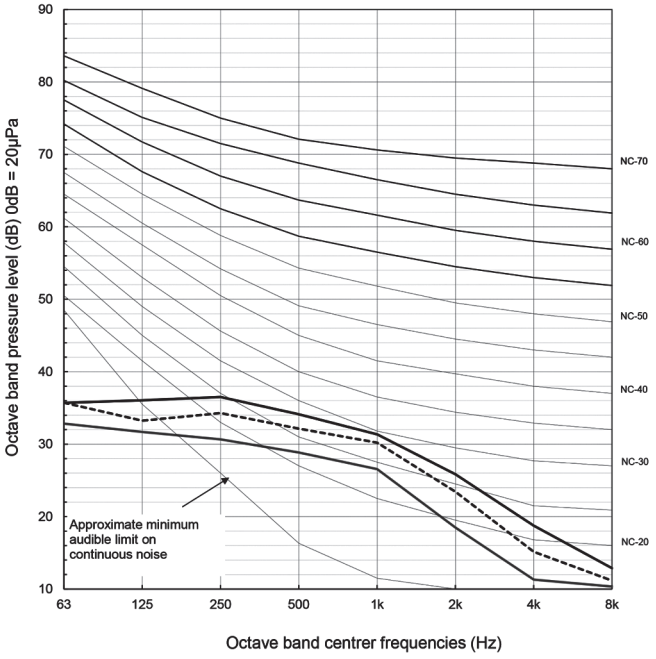

Condition	Acale	LINE
High	41	——
Middle	36	- -
Low	33	——
-	-	- -

External Static Pressure : 0.5inWG. (125Pa)

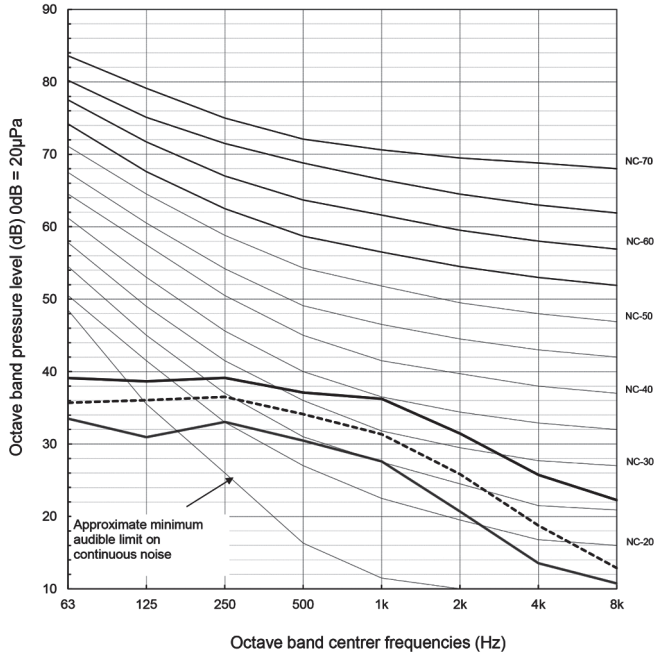

Condition	Acale	LINE
High	45	——
Middle	41	- -
Low	37	——
-	-	- -

External Static Pressure : 0.8inWG. (200Pa)

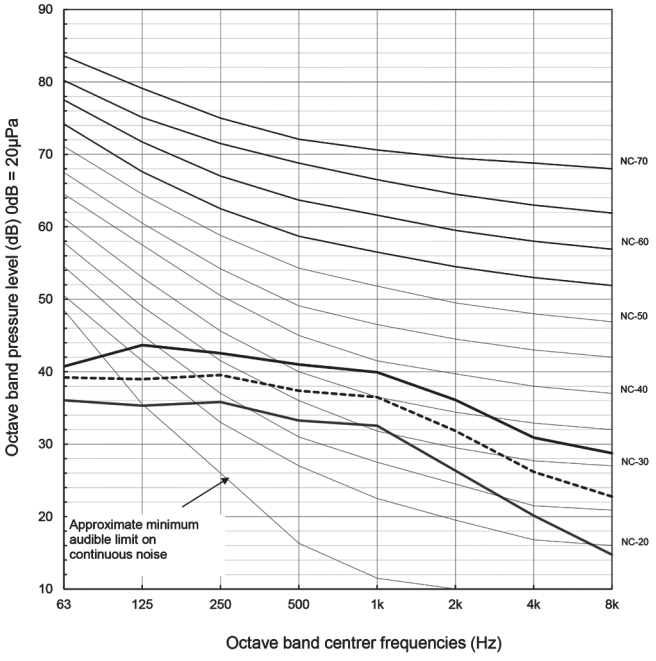

MFZ-KJ09NA

FUNCTION	SPL(dB(A))	LINE
COOLING	46	●——●
HEATING	46	○——○

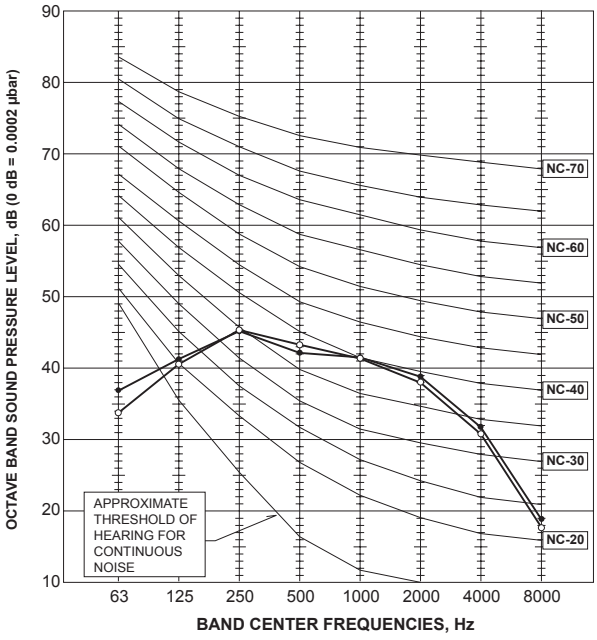

MFZ-KJ12NA

FUNCTION	SPL(dB(A))	LINE
COOLING	46	●——●
HEATING	46	○——○

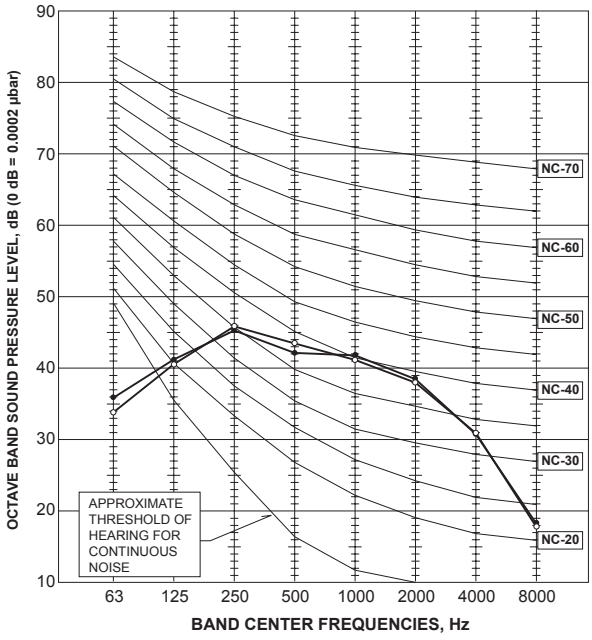

MFZ-KJ15NA

FUNCTION	SPL(dB(A))	LINE
COOLING	47	●——●
HEATING	49	○——○

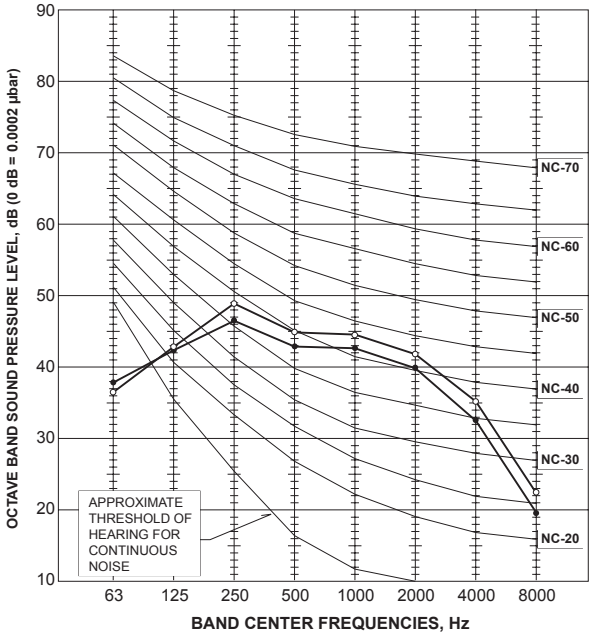

MFZ-KJ18NA

FUNCTION	SPL(dB(A))	LINE
COOLING	50	●——●
HEATING	49	○——○

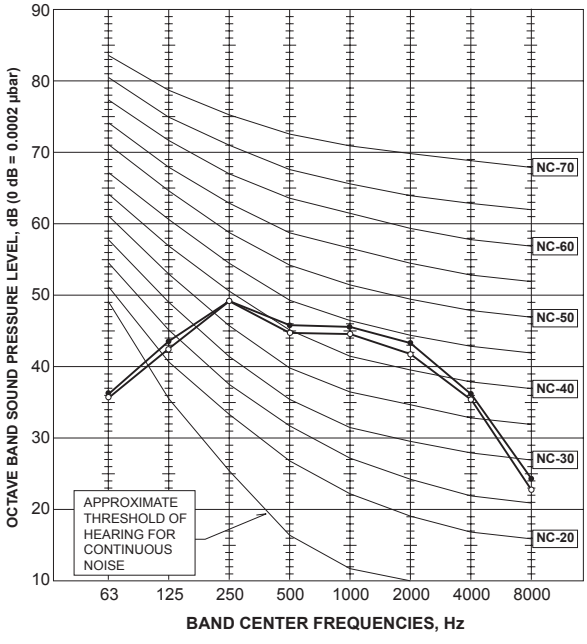

10-2. OUTDOOR UNIT

MUZ-GL09NA
MUZ-GL09NAH

NOTCH	SPL(dB(A))	LINE
COOLING	48	●——●
HEATING	50	○——○

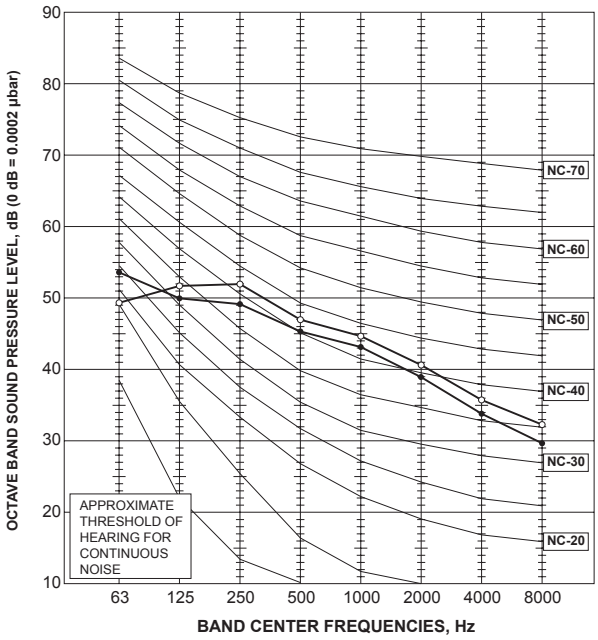

MUZ-GL12NA
MUZ-GL12NAH

NOTCH	SPL(dB(A))	LINE
COOLING	49	●——●
HEATING	51	○——○

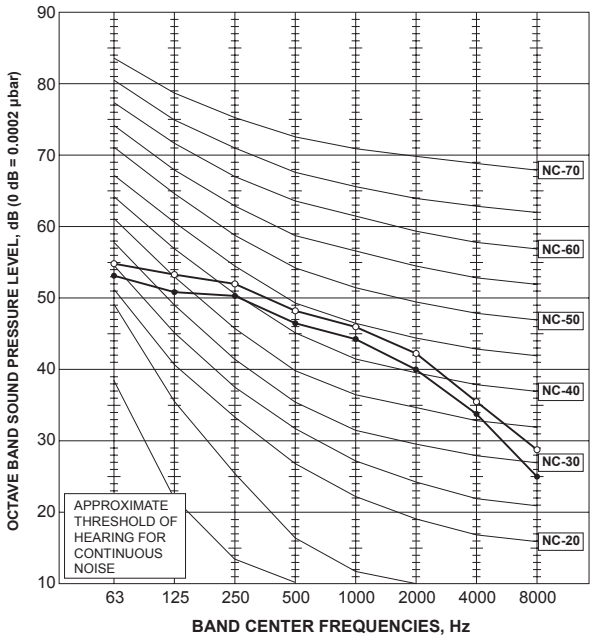

MUZ-GL15NA
MUZ-GL15NAH

NOTCH	SPL(dB(A))	LINE
COOLING	49	●——●
HEATING	51	○——○

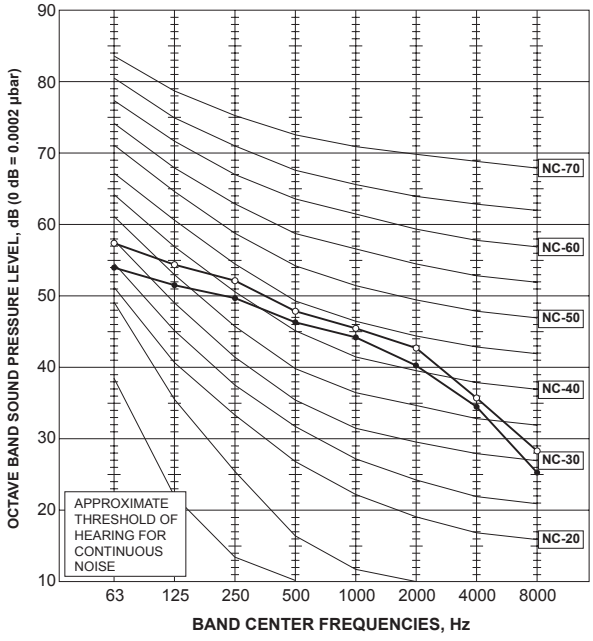

MUZ-GL18NA
MUZ-GL18NAH

NOTCH	SPL(dB(A))	LINE
COOLING	54	●——●
HEATING	55	○——○

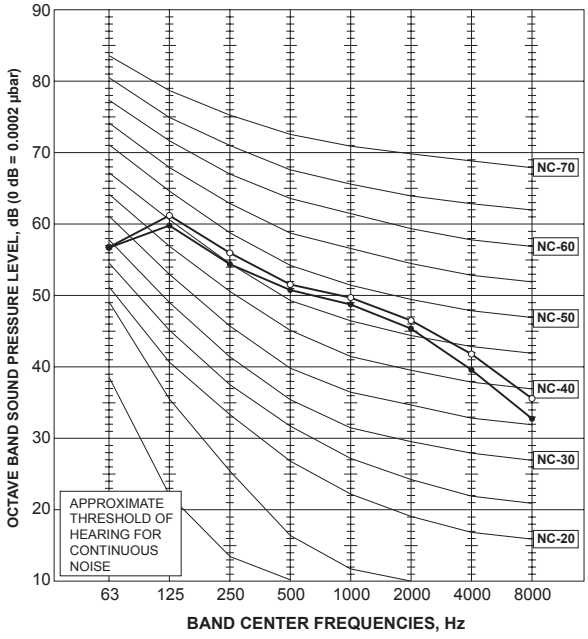

MUZ-GL24NA
MUZ-GL24NAH

NOTCH	SPL(dB(A))	LINE
COOLING	55	●——●
HEATING	55	○——○

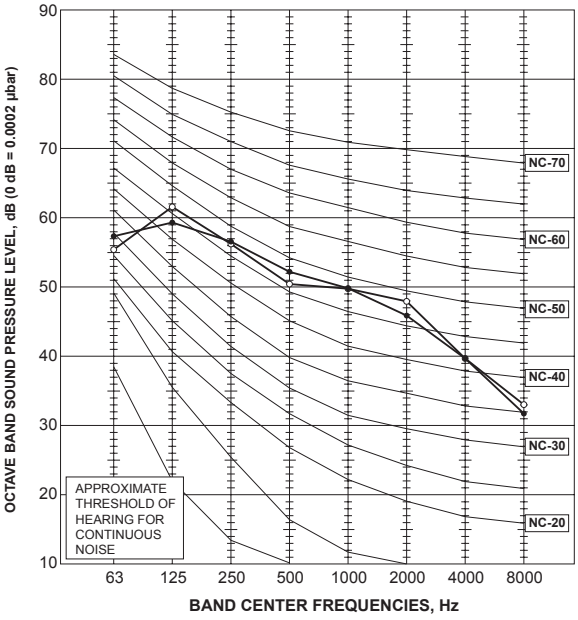

MUY-GL09NA

NOTCH	SPL(dB(A))	LINE
COOLING	48	●——●
HEATING	—	○——○

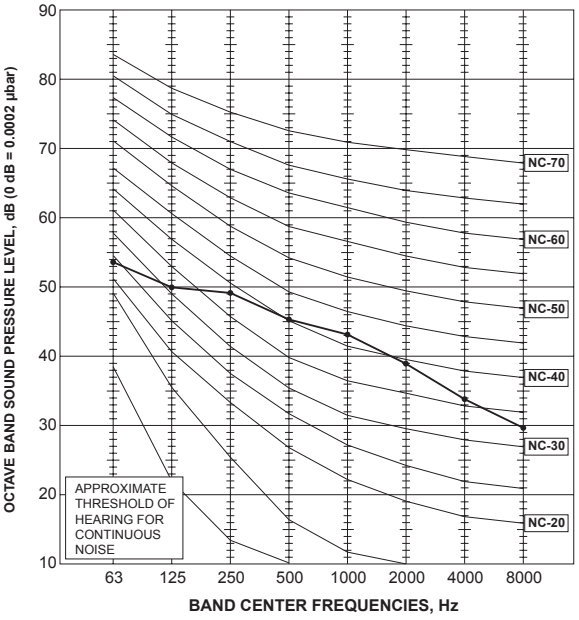

MUY-GL12NA

NOTCH	SPL(dB(A))	LINE
COOLING	49	●——●
HEATING	—	○——○

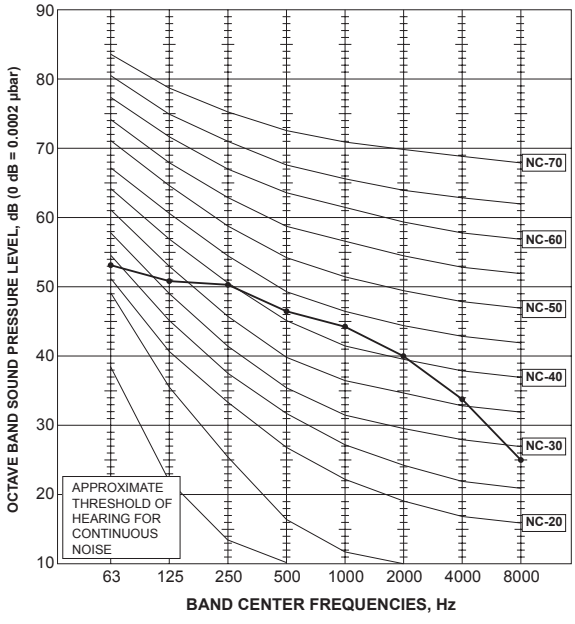

MUY-GL15NA

NOTCH	SPL(dB(A))	LINE
COOLING	49	●——●
HEATING	—	○——○

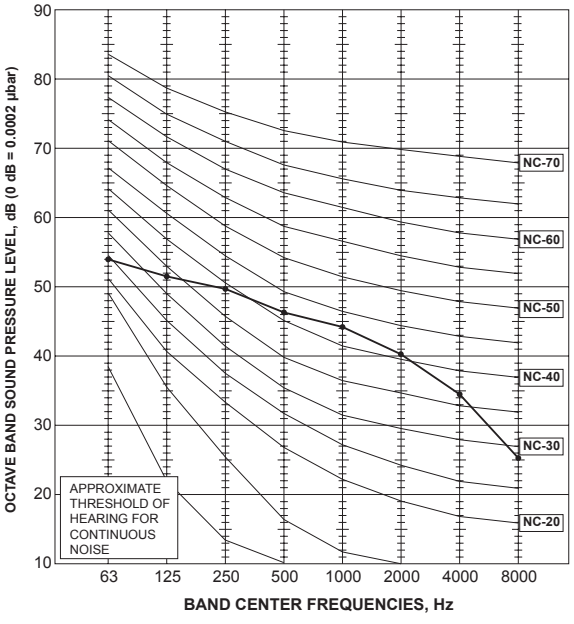

MUY-GL18NA

NOTCH	SPL(dB(A))	LINE
COOLING	54	●——●
HEATING	–	○——○

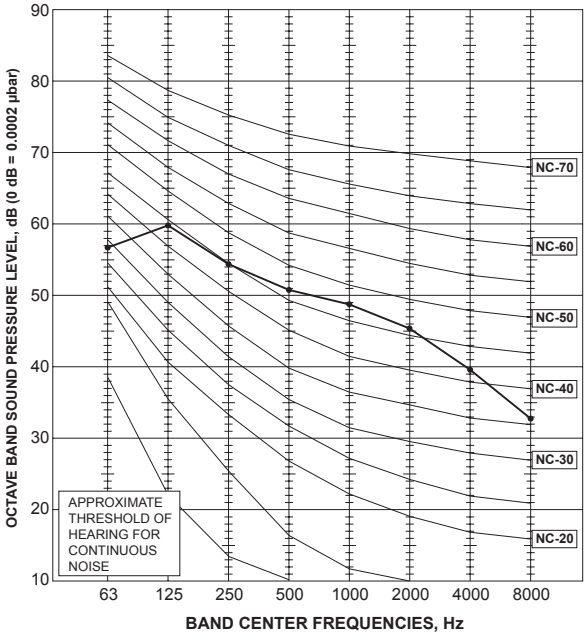

MUY-GL24NA

NOTCH	SPL(dB(A))	LINE
COOLING	55	●——●
HEATING	–	○——○

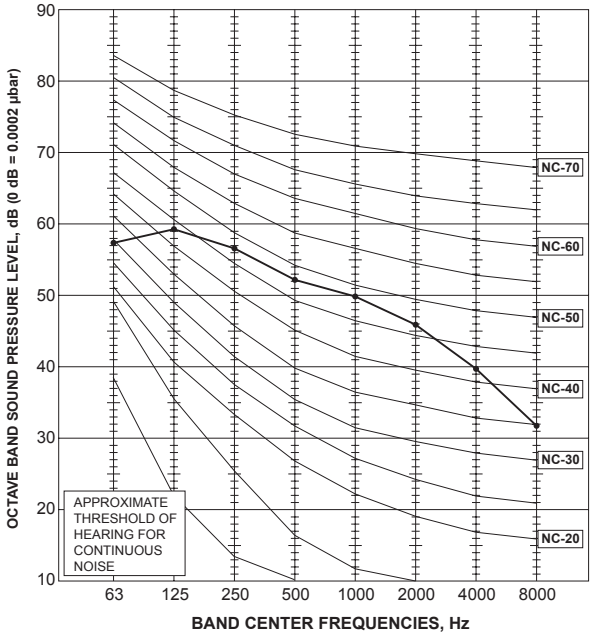

MUZ-HM09NA

NOTCH	SPL(dB(A))	LINE
COOLING	46	●——●
HEATING	50	○——○

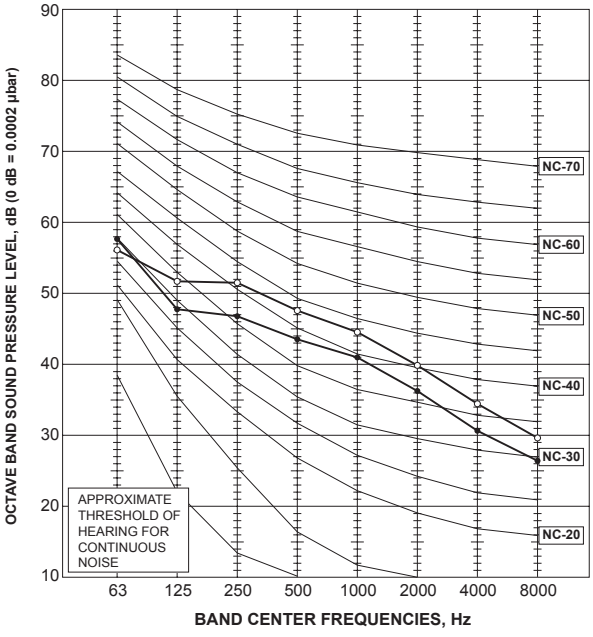

MUZ-HM12NA

NOTCH	SPL(dB(A))	LINE
COOLING	49	●——●
HEATING	51	○——○

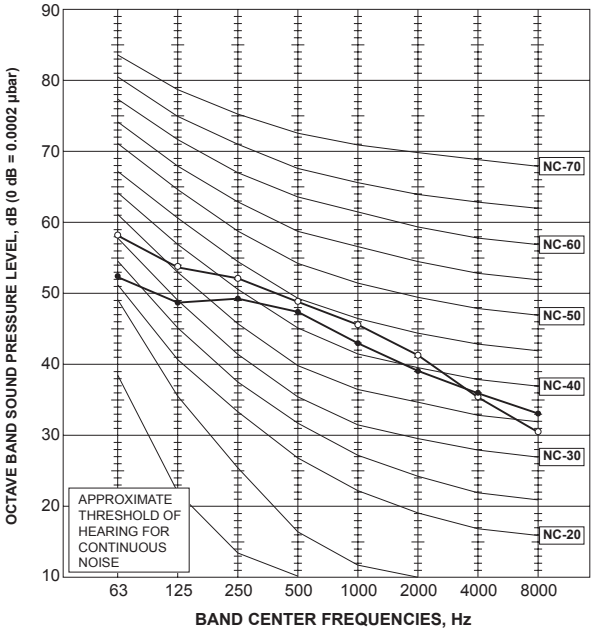

MUZ-HM15NA

NOTCH	SPL(dB(A))	LINE
COOLING	49	●——●
HEATING	51	○——○

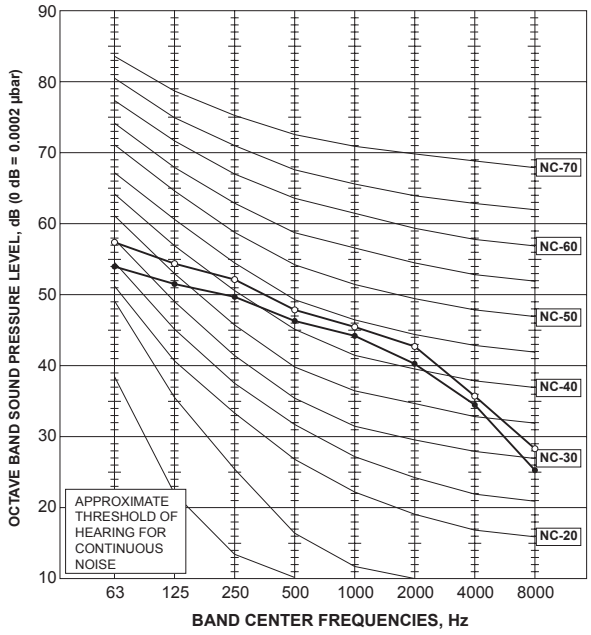

MUZ-HM18NA

NOTCH	SPL(dB(A))	LINE
COOLING	49	●——●
HEATING	51	○——○

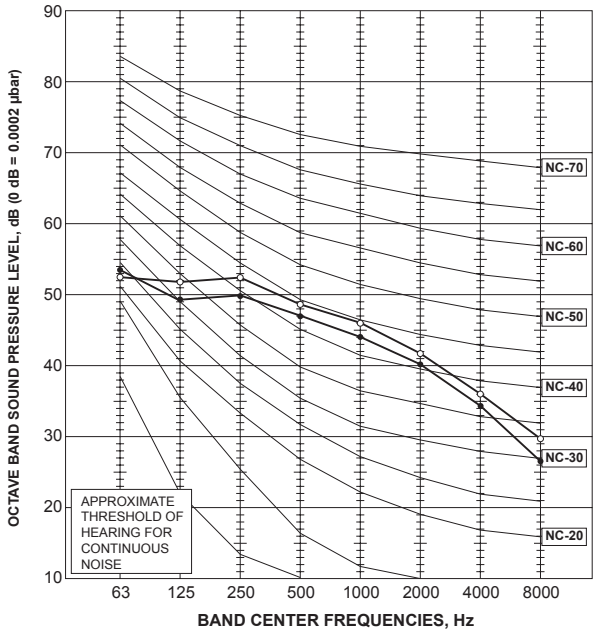

MUZ-HM24NA

NOTCH	SPL(dB(A))	LINE
COOLING	54	●——●
HEATING	55	○——○

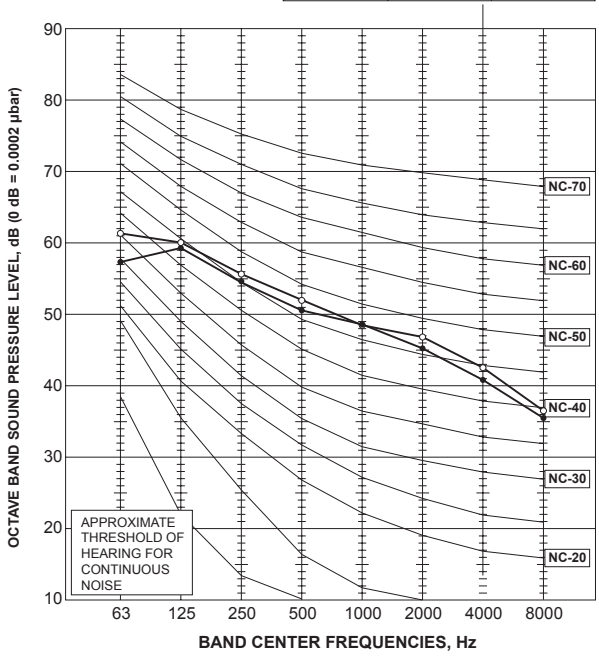

MUZ-FH06NA
MUZ-FH06NAH

NOTCH	SPL(dB(A))	LINE
COOLING	47	●——●
HEATING	48	○——○

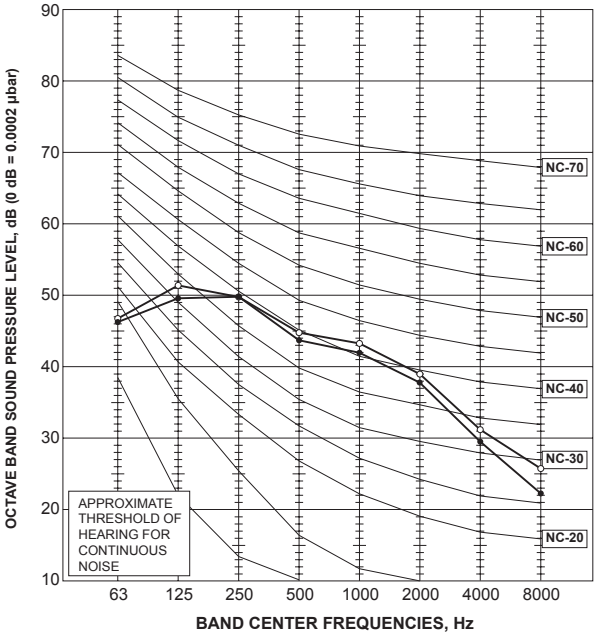

MUZ-FH09NA
MUZ-FH09NAH

NOTCH	SPL(dB(A))	LINE
COOLING	48	●——●
HEATING	49	○——○

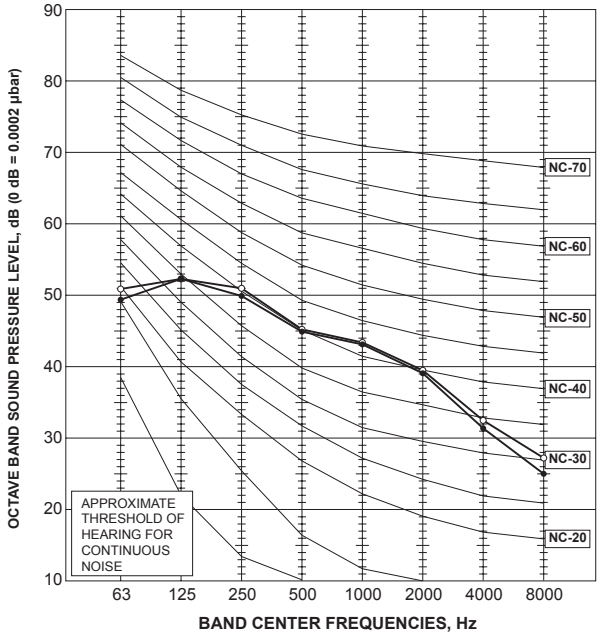

MUZ-FH12NA
MUZ-FH12NAH

NOTCH	SPL(dB(A))	LINE
COOLING	49	●——●
HEATING	51	○——○

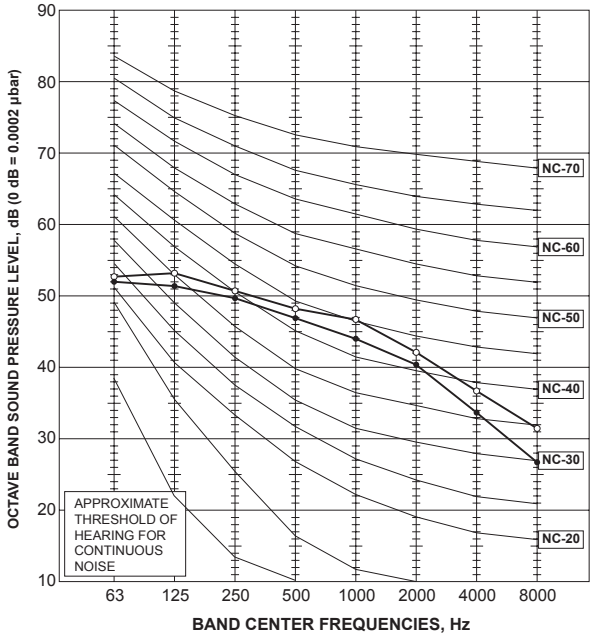

MUZ-FH15NA
MUZ-FH15NAH

NOTCH	SPL(dB(A))	LINE
COOLING	51	●——●
HEATING	55	○——○

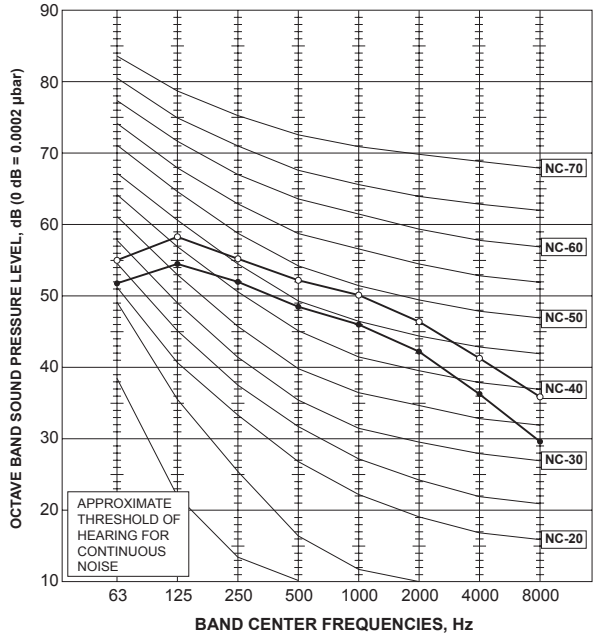

MUZ-FH18NA2
MUZ-FH18NAH2

NOTCH	SPL(dB(A))	LINE
COOLING	52	●——●
HEATING	55	○——○

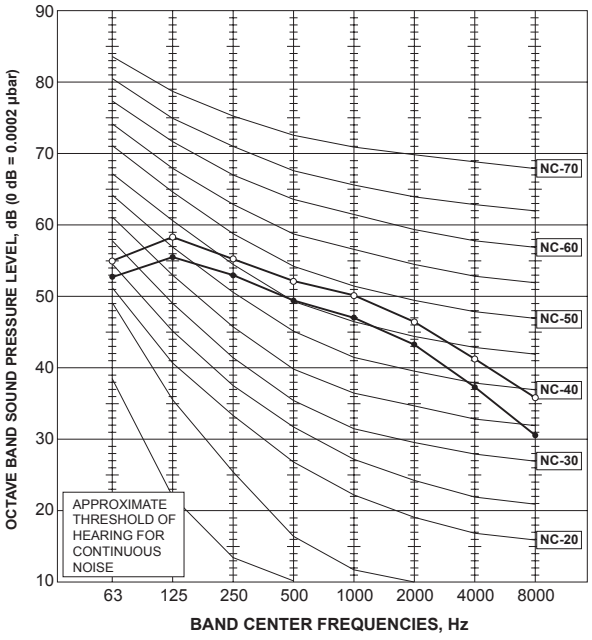

MUZ-FE09NAH

NOTCH	SPL(dB(A))	LINE
COOLING	48	●——●
HEATING	49	○——○

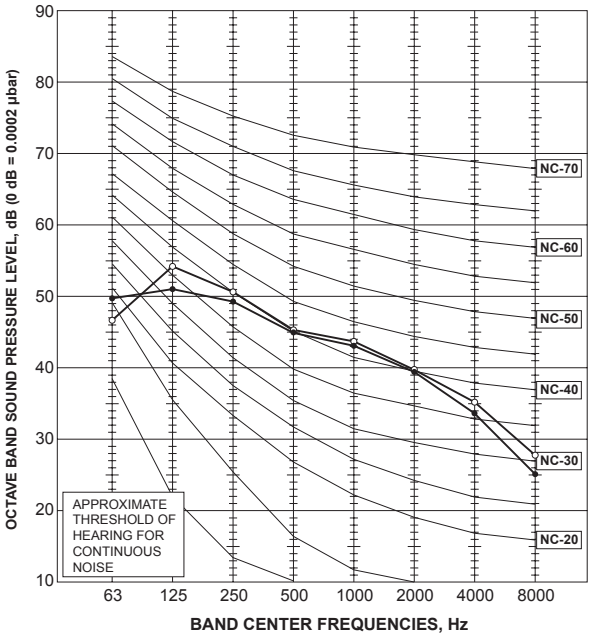

MUZ-FE12NAH

NOTCH	SPL(dB(A))	LINE
COOLING	48	●——●
HEATING	49	○——○

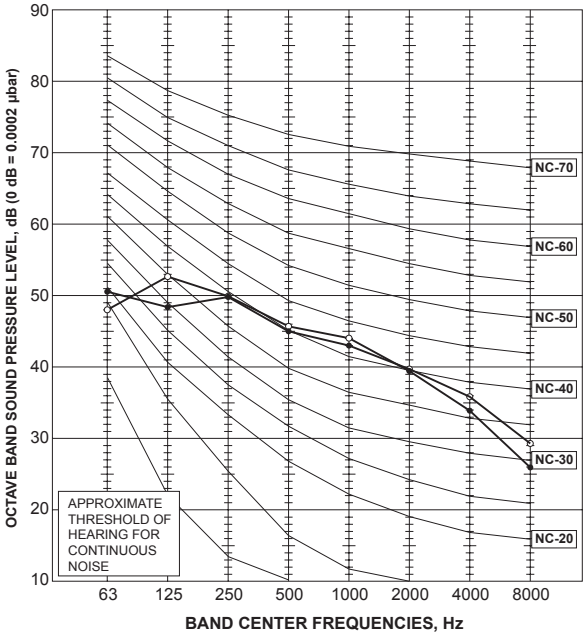

MUZ-D30NA
MUY-D30NA

NOTCH	SPL(dB(A))	LINE
COOLING	55	●——●
HEATING	57	○——○

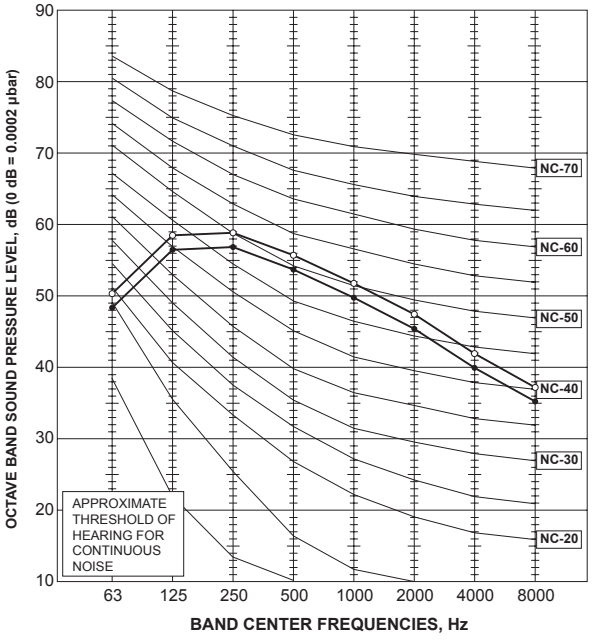

MUZ-D36NA
MUY-D36NA

NOTCH	SPL(dB(A))	LINE
COOLING	56	●——●
HEATING	57	○——○

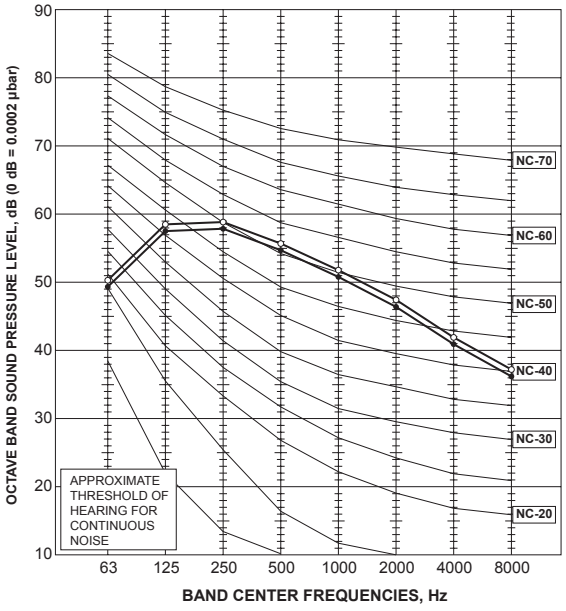

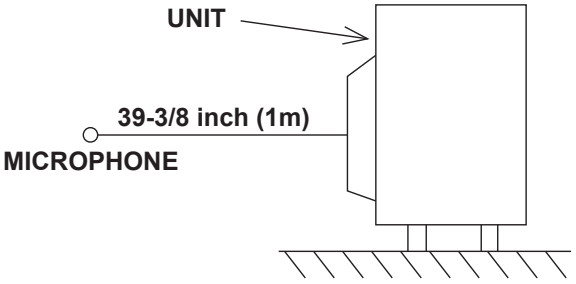

SUZ-KA09NA

FUNCTION	SPL(dB(A))	LINE
COOLING	46	●——●
HEATING	50	○——○

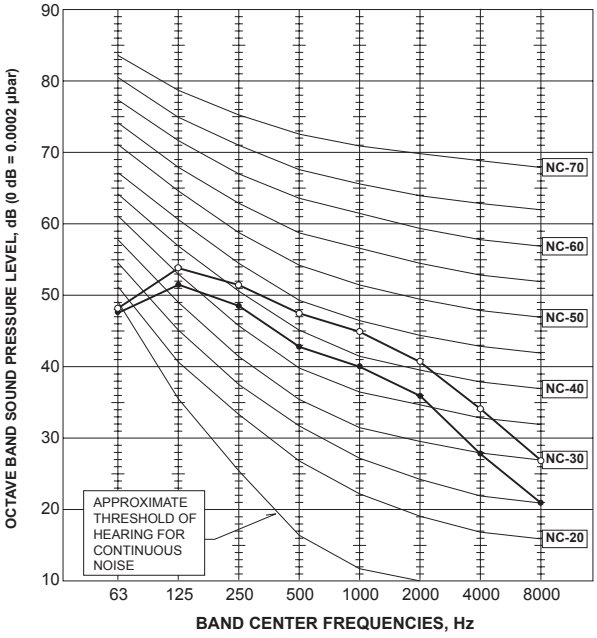

SUZ-KA12NA

FUNCTION	SPL(dB(A))	LINE
COOLING	49	●——●
HEATING	51	○——○

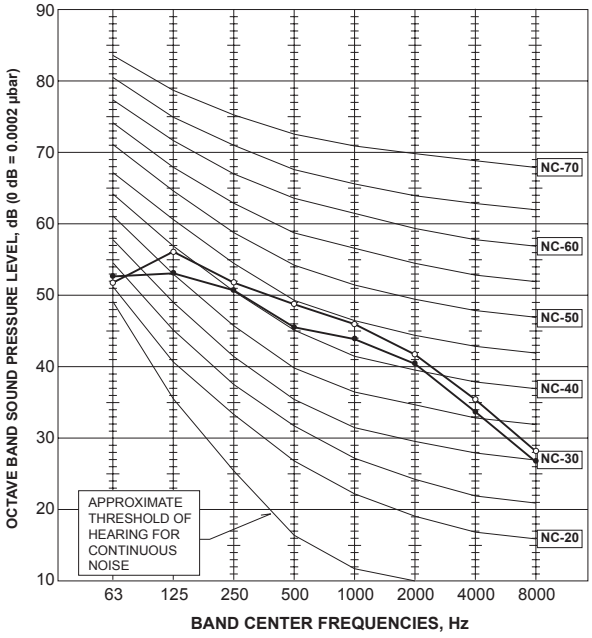

SUZ-KA15NA

FUNCTION	SPL(dB(A))	LINE
COOLING	49	●——●
HEATING	51	○——○

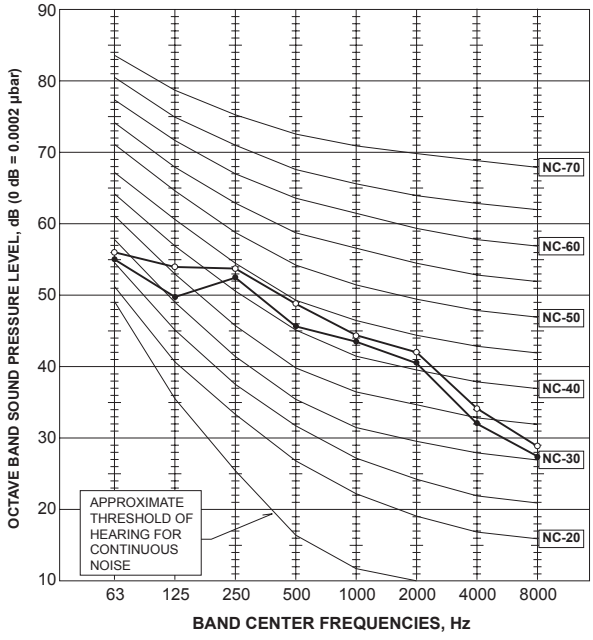

SUZ-KA18NA

FUNCTION	SPL(dB(A))	LINE
COOLING	54	●——●
HEATING	56	○——○

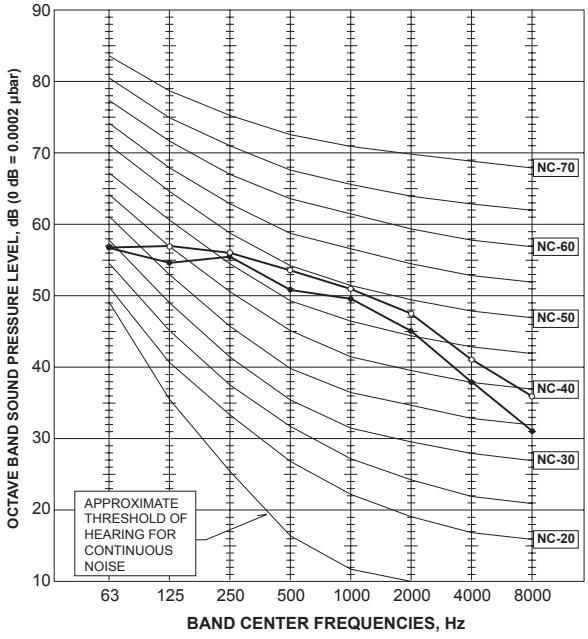

MUFZ-KJ09NAHZ

FUNCTION	SPL(dB(A))	LINE
COOLING	48	●——●
HEATING	50	○——○

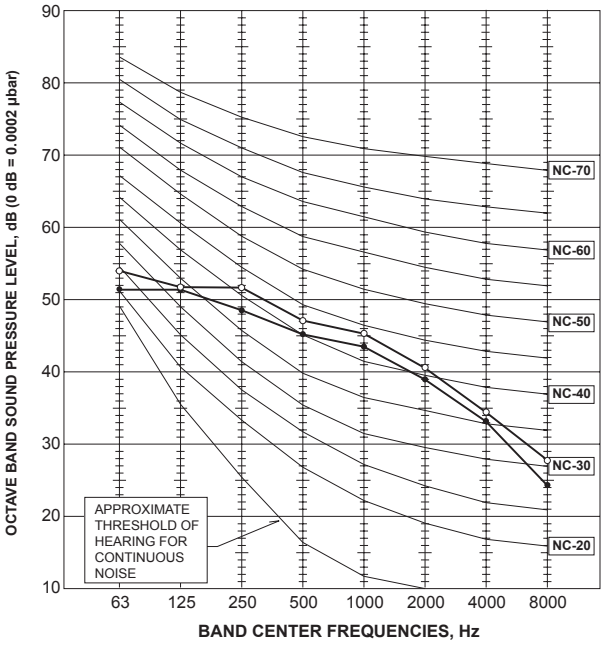

MUFZ-KJ12NAHZ

FUNCTION	SPL(dB(A))	LINE
COOLING	48	●——●
HEATING	50	○——○

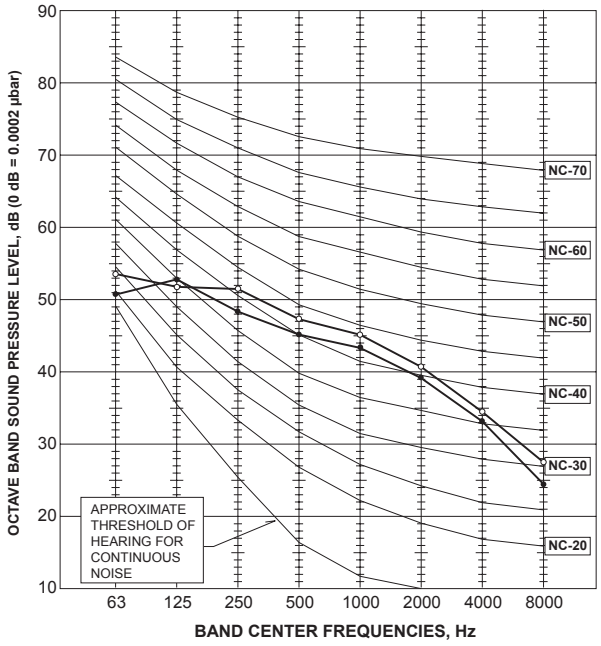

MUFZ-KJ15NAHZ

FUNCTION	SPL(dB(A))	LINE
COOLING	51	●——●
HEATING	55	○——○

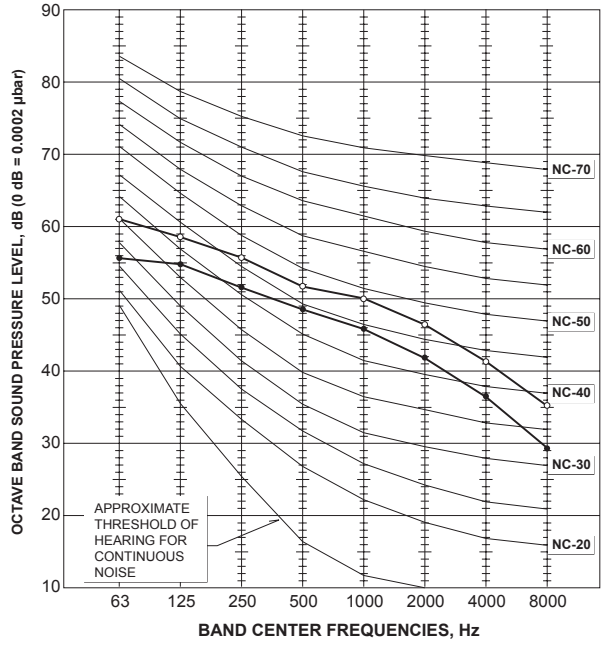

MUFZ-KJ18NAHZ

FUNCTION	SPL(dB(A))	LINE
COOLING	51	●——●
HEATING	55	○——○

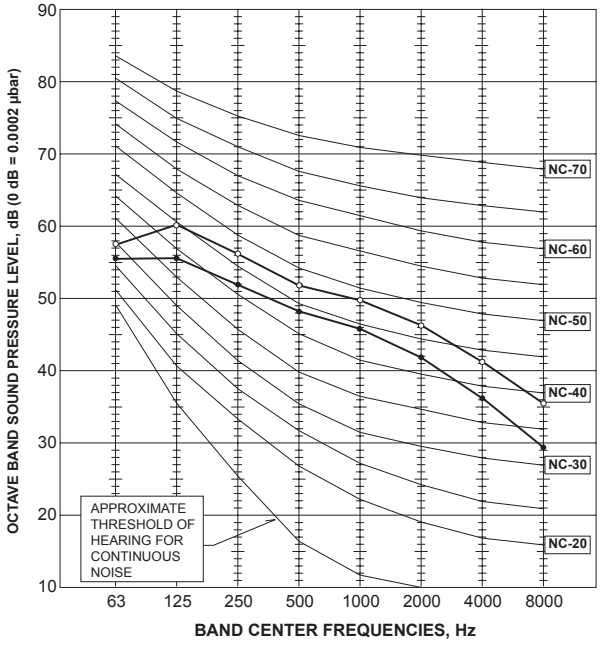

11 MAX. HEATING CAPACITY IN LOW AMBIENT TEMPERATURE

MUZ-GL09NA MUZ-GL09NAH

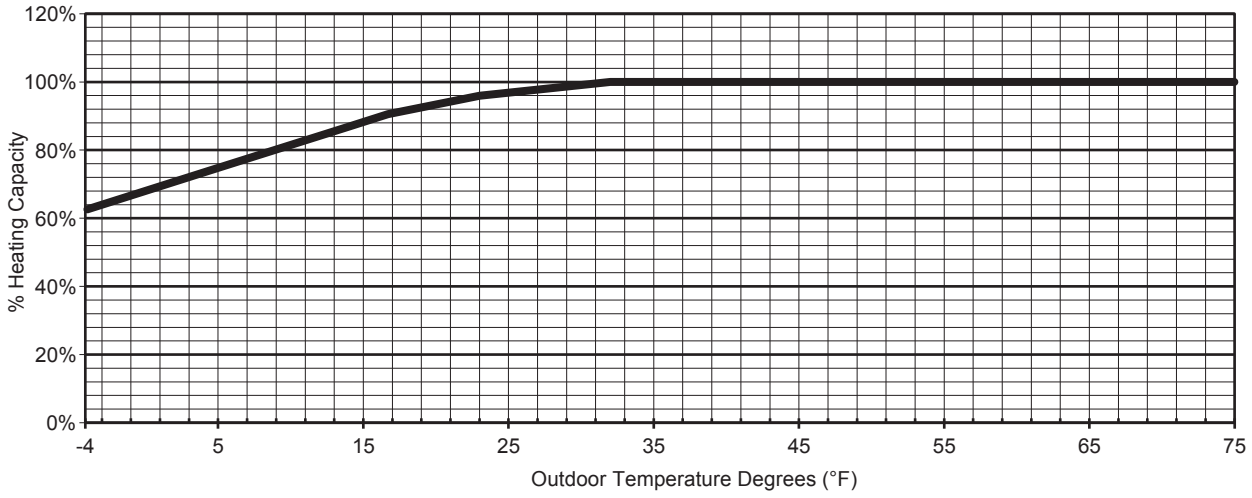

HEATING CAPACITY

Outdoor Temperature Degrees (°F)	-4.0	5.0	14.0	23.0	32.0	41.0	50.0	69.8	75.0
% Heating Capacity	63%	75%	87%	96%	100%	100%	100%	100%	100%

MUZ-GL12NA MUZ-GL12NAH

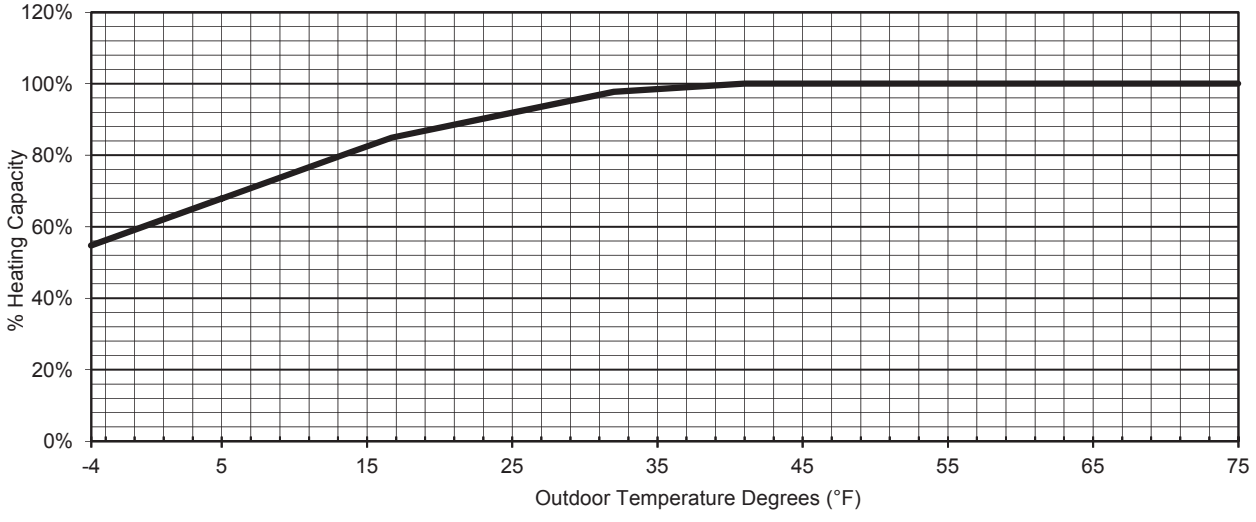

HEATING CAPACITY

Outdoor Temperature Degrees (°F)	-4.0	5.0	14.0	23.0	32.0	41.0	50.0	69.8	75.0
% Heating Capacity	55%	68%	81%	90%	98%	100%	100%	100%	100%

MUZ-GL15NA MUZ-GL15NAH

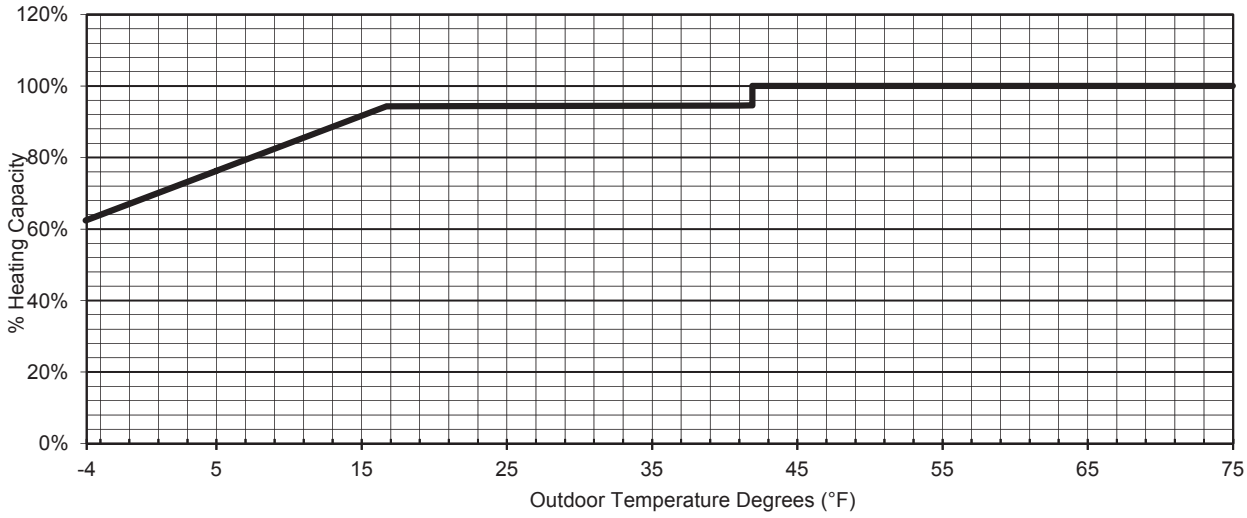

HEATING CAPACITY

Outdoor Temperature Degrees (°F)	-4.0	5.0	14.0	23.0	32.0	41.0	50.0	69.8	75.0
% Heating Capacity	62%	76%	90%	94%	94%	95%	100%	100%	100%

MUZ-GL18NA

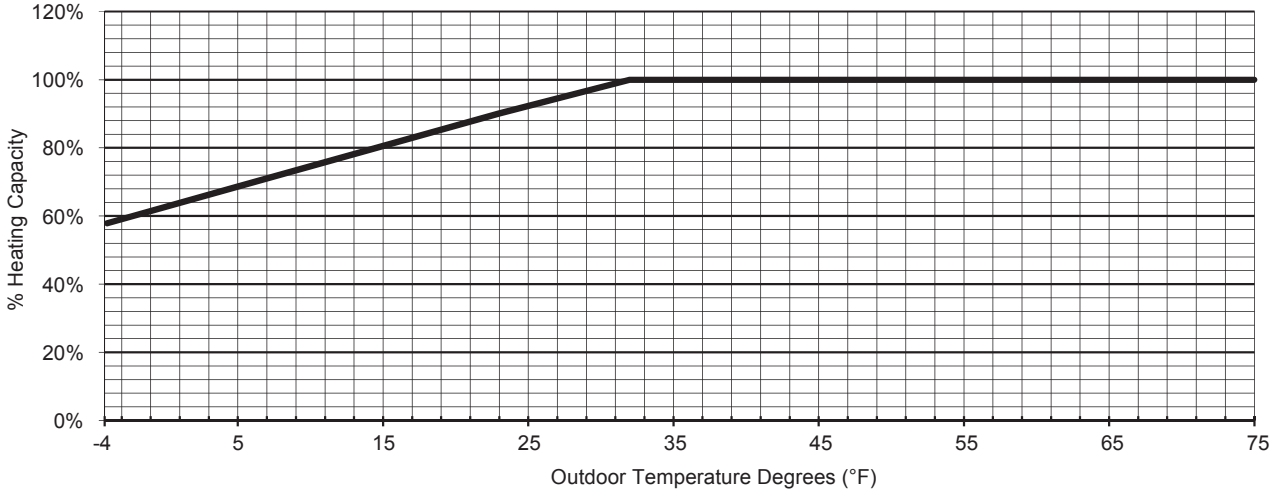

HEATING CAPACITY

Outdoor Temperature Degrees (°F)	-4.0	5.0	14.0	23.0	32.0	41.0	50.0	69.8	75.0
% Heating Capacity	58%	69%	79%	90%	100%	100%	100%	100%	100%

MUZ-GL18NAH

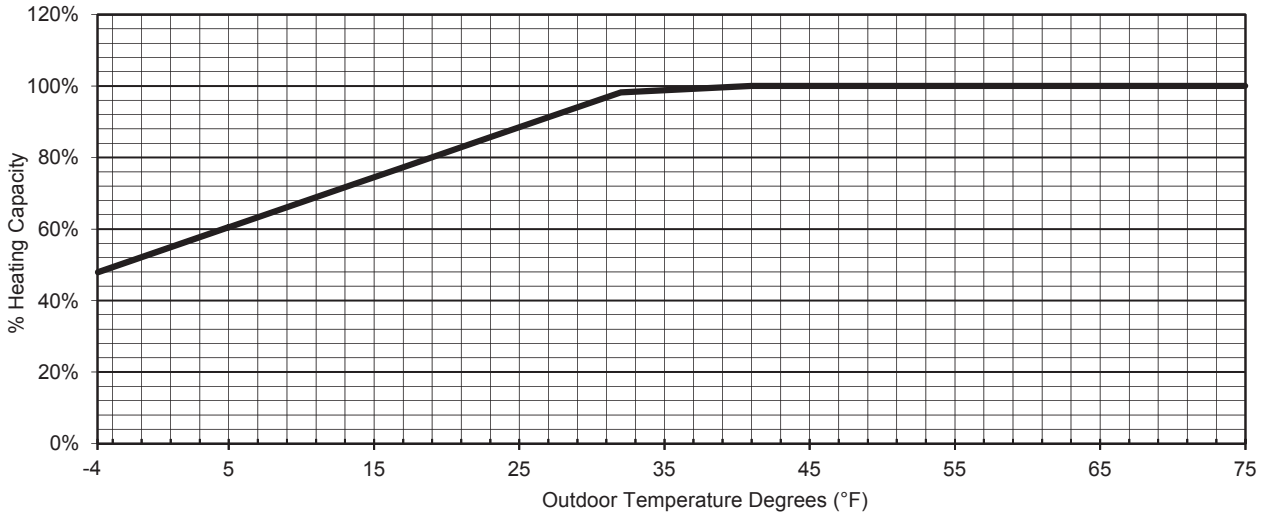

HEATING CAPACITY

Outdoor Temperature Degrees (°F)	-4.0	5.0	14.0	23.0	32.0	41.0	50.0	69.8	75.0
% Heating Capacity	48%	60%	73%	86%	98%	100%	100%	100%	100%

MUZ-GL24NA MUZ-GL24NAH

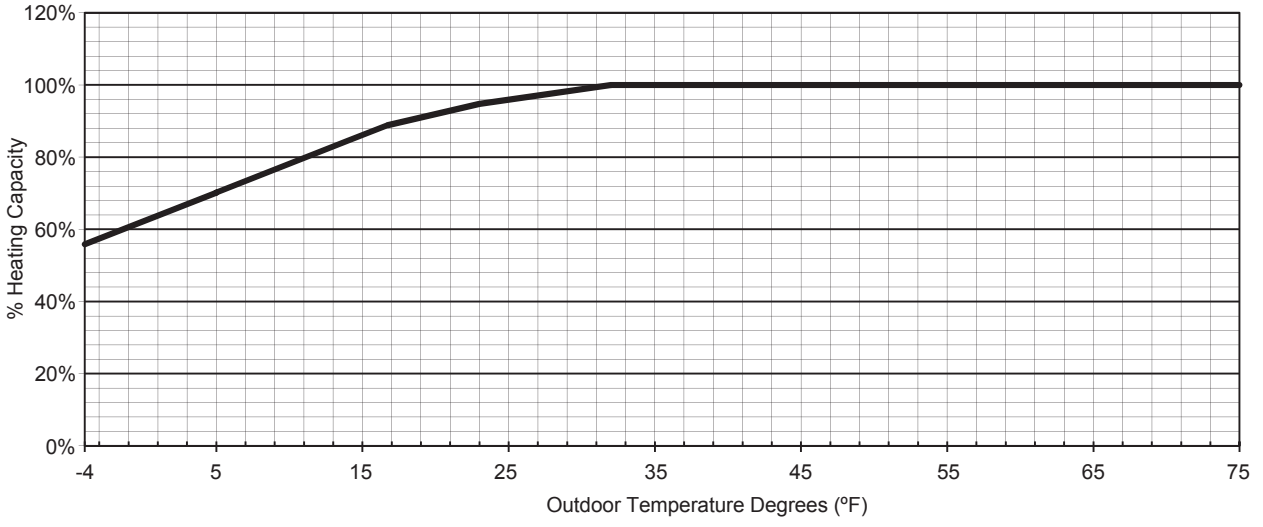

HEATING CAPACITY

Outdoor Temperature Degrees (ºF)	-4.0	5.0	14.0	23.0	32.0	41.0	50.0	69.8	75.0
% Heating Capacity	56%	70%	85%	95%	100%	100%	100%	100%	100%

MUZ-HM09NA - U1

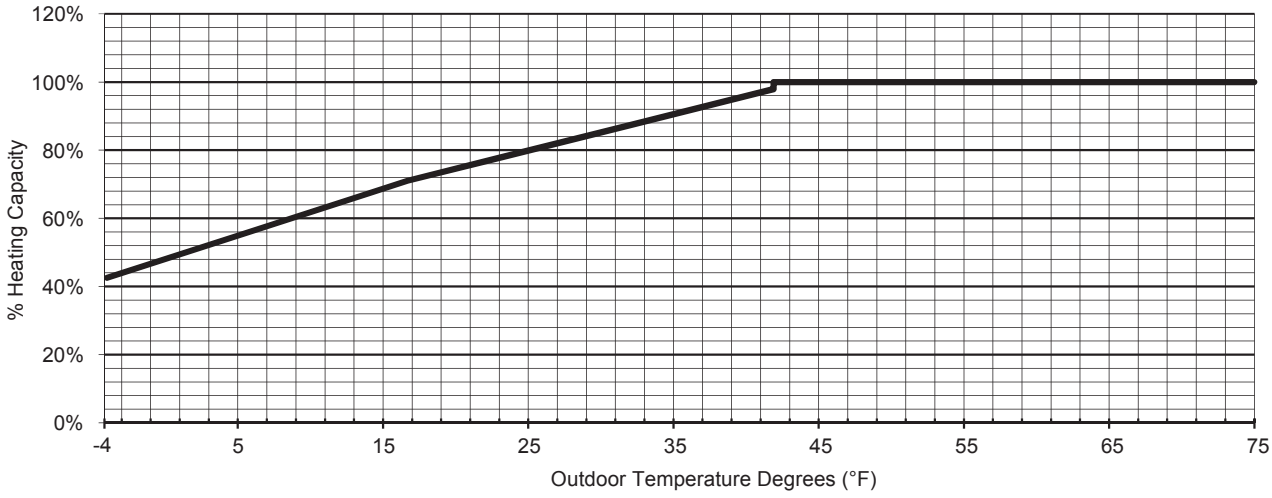

HEATING CAPACITY

Outdoor Temperature Degrees (°F)	-4.0	5.0	14.0	23.0	32.0	41.0	50.0	69.8	75.0
% Heating Capacity	43%	55%	67%	78%	87%	97%	100%	100%	100%

MUZ-HM09NA - U8

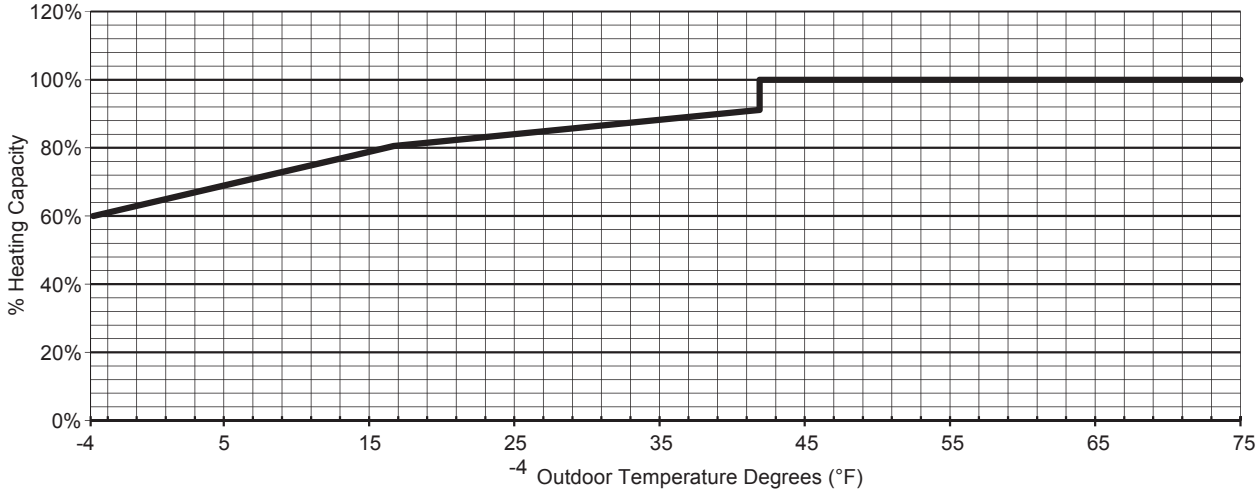

HEATING CAPACITY

Outdoor Temperature Degrees (°F)	-4.0	5.0	14.0	23.0	32.0	41.0	50.0	69.8	75.0
% Heating Capacity	60%	69%	78%	83%	87%	91%	100%	100%	100%

MUZ-HM12NA - U1

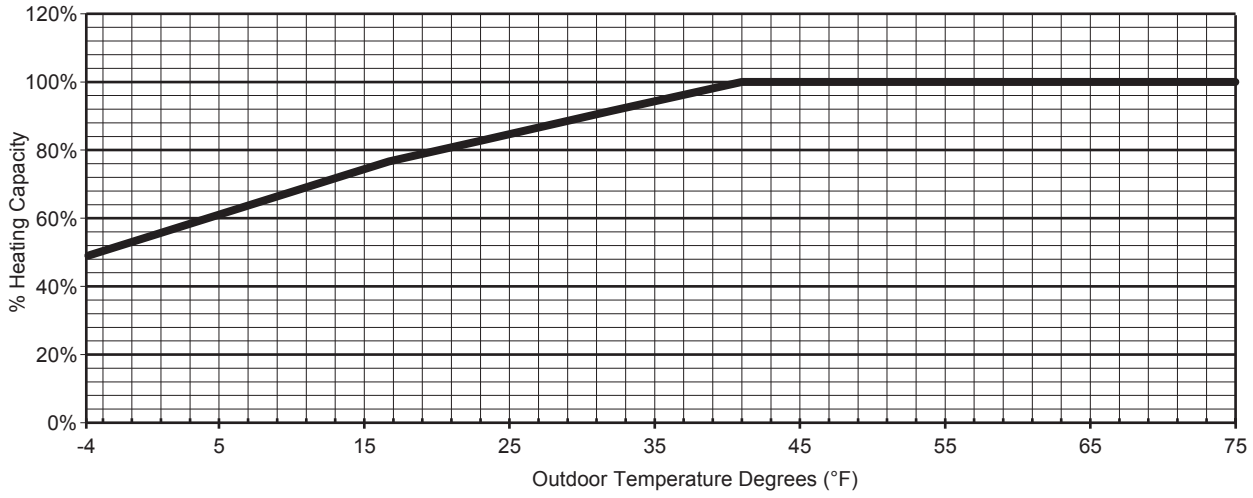

HEATING CAPACITY

Outdoor Temperature Degrees (°F)	-4.0	5.0	14.0	23.0	32.0	41.0	50.0	69.8	75.0
% Heating Capacity	48%	61%	74%	83%	92%	100%	100%	100%	100%

MUZ-HM12NA - U8

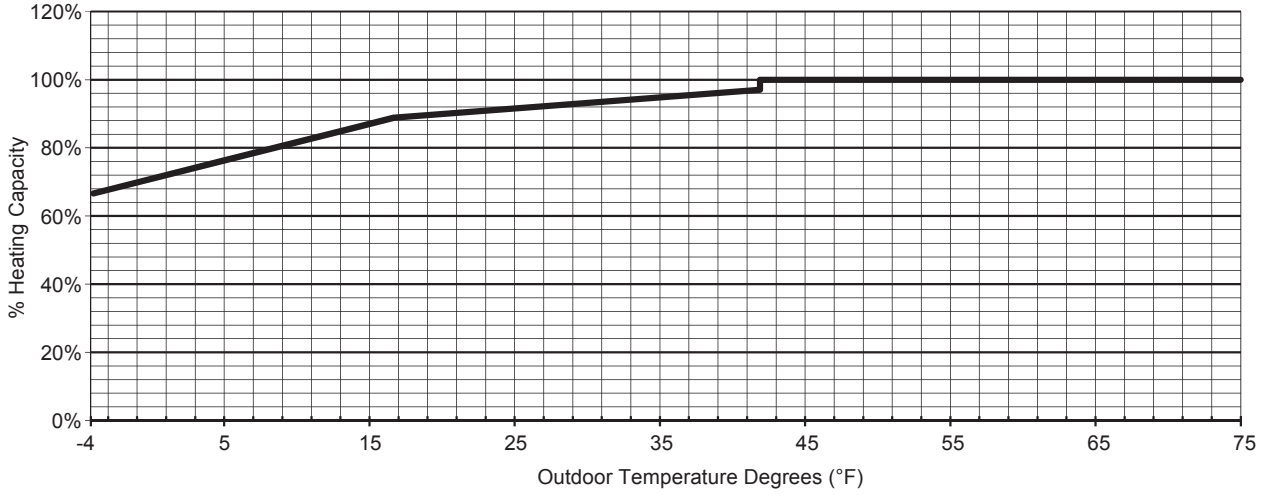

HEATING CAPACITY

Outdoor Temperature Degrees (°F)	-4.0	5.0	14.0	23.0	32.0	41.0	50.0	69.8	75.0
% Heating Capacity	67%	76%	86%	91%	94%	97%	100%	100%	100%

MUZ-HM15NA

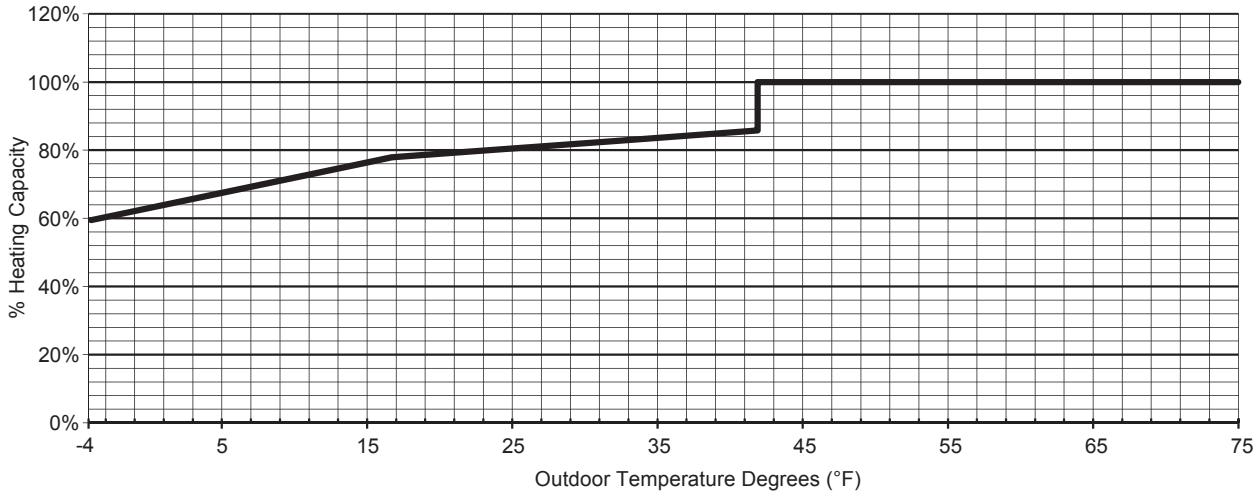

HEATING CAPACITY

Outdoor Temperature Degrees (°F)	-4.0	5.0	14.0	23.0	32.0	41.0	50.0	69.8	75.0
% Heating Capacity	59%	68%	76%	80%	83%	85%	100%	100%	100%

MUZ-HM18NA

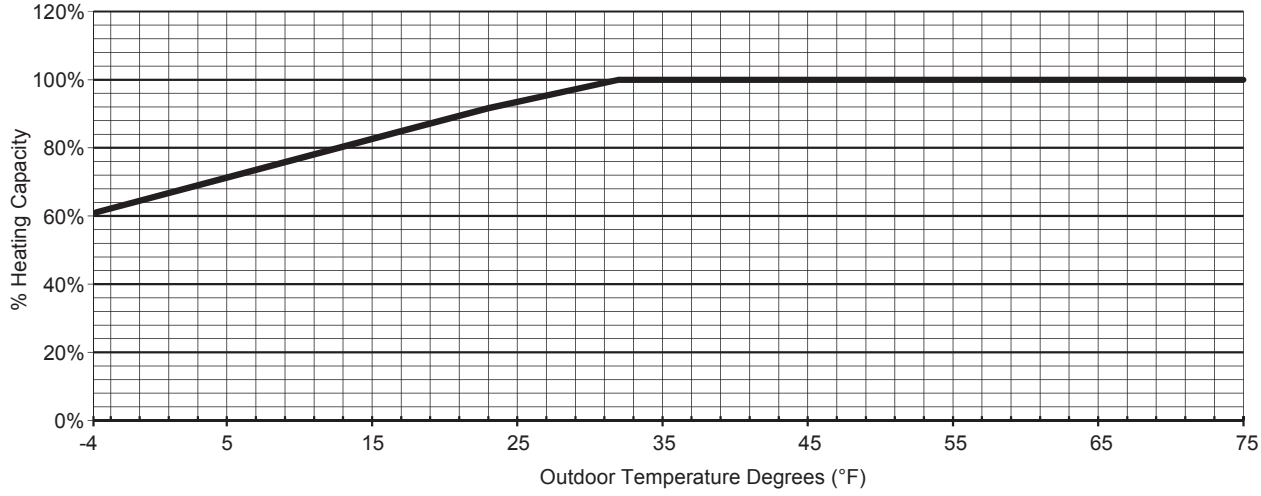

HEATING CAPACITY

Outdoor Temperature Degrees (°F)	-4.0	5.0	14.0	23.0	32.0	41.0	50.0	69.8	75.0
% Heating Capacity	61%	71%	81%	92%	100%	100%	100%	100%	100%

MUZ-HM24NA

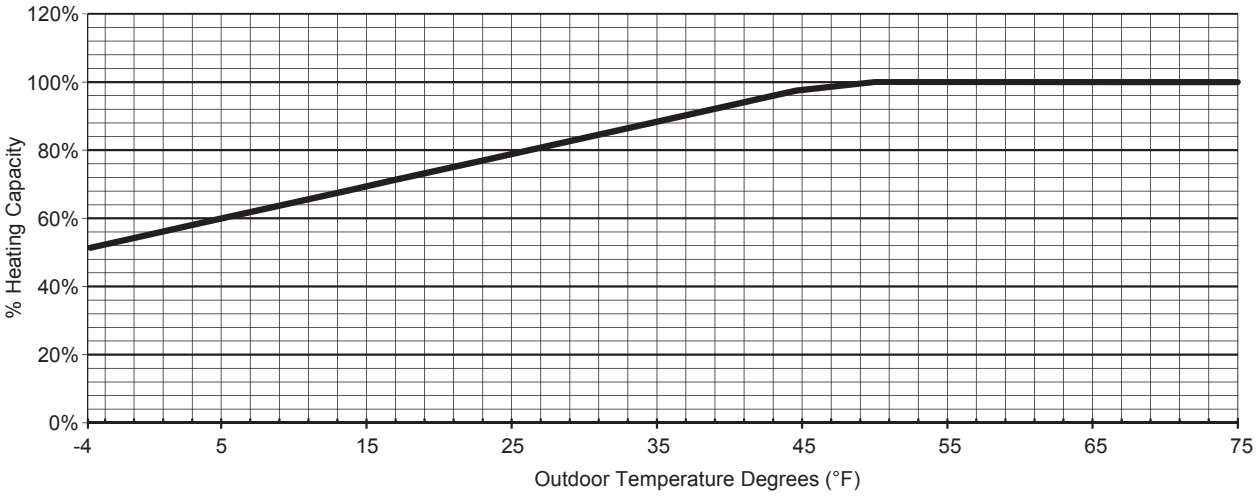

HEATING CAPACITY

Outdoor Temperature Degrees (°F)	-4.0	5.0	14.0	23.0	32.0	41.0	50.0	69.8	75.0
% Heating Capacity	51%	60%	68%	77%	86%	94%	100%	100%	100%

MUZ-FH06NA MUZ-FH06NAH

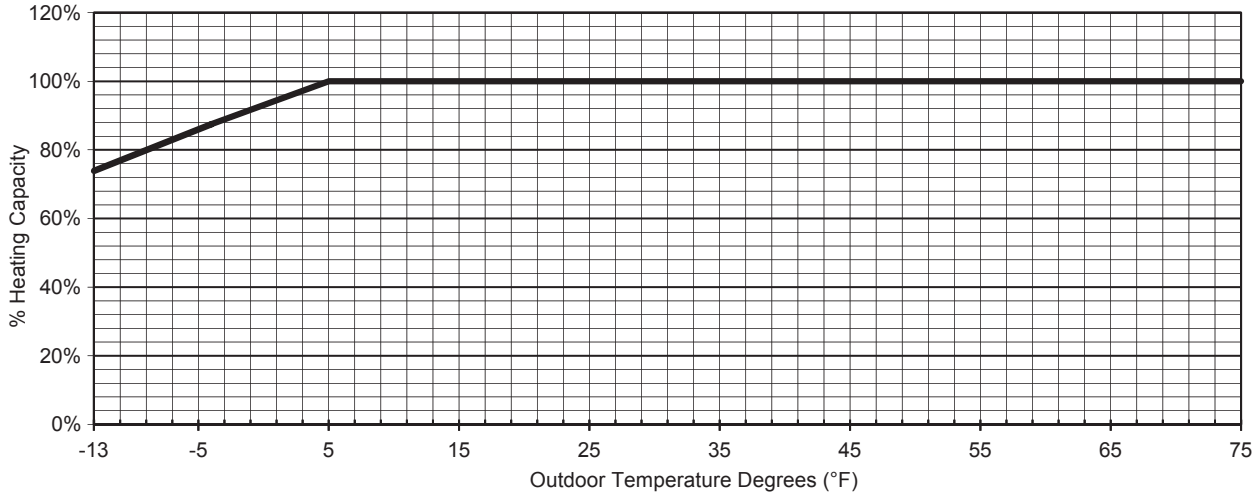

HEATING CAPACITY

Outdoor Temperature Degrees (°F)	-13.0	-4.0	5.0	14.0	23.0	32.0	41.0	50.0	69.8	75.0
% Heating Capacity	74%	88%	100%	100%	100%	100%	100%	100%	100%	100%

MUZ-FH09NA

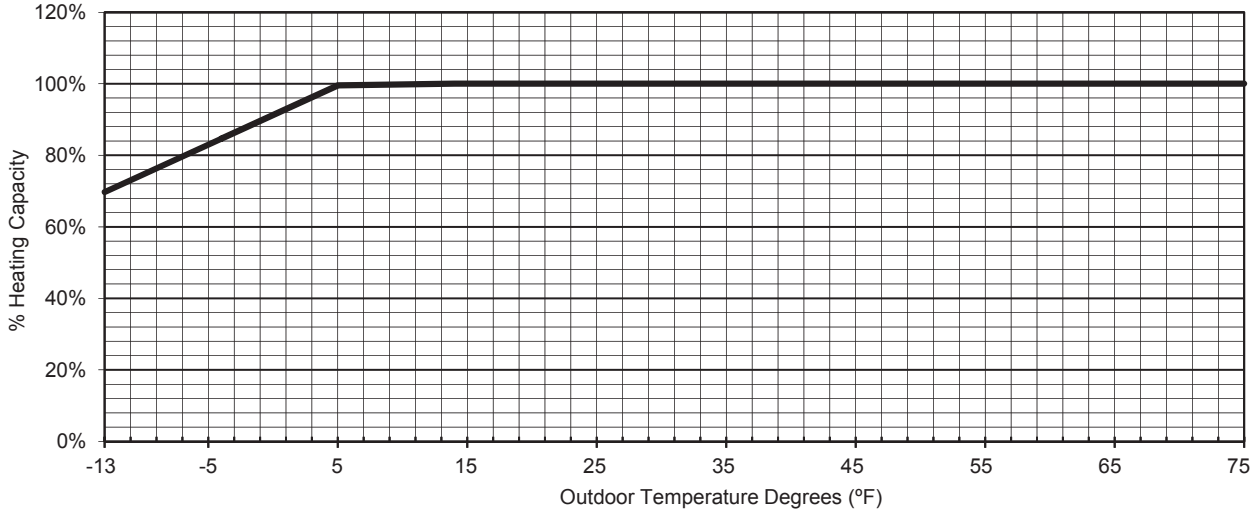

HEATING CAPACITY

Outdoor Temperature Degrees (°F)	-13.0	-4.0	5.0	14.0	23.0	32.0	41.0	50.0	69.8	75.0
% Heating Capacity	70%	85%	100%	100%	100%	100%	100%	100%	100%	100%

MUZ-FH09NAH

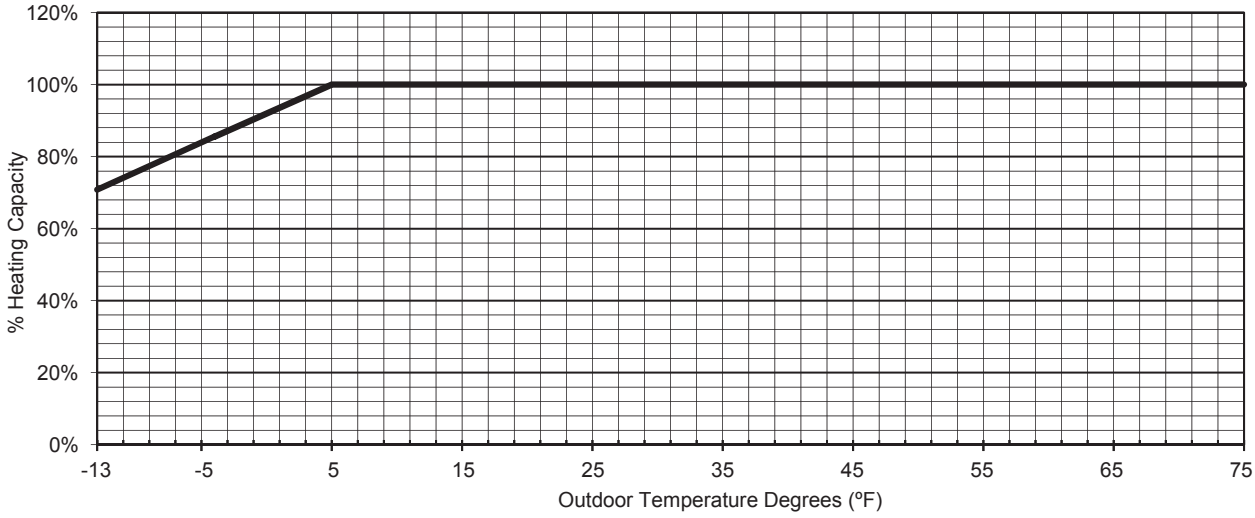

HEATING CAPACITY

Outdoor Temperature Degrees (°F)	-13.0	-4.0	5.0	14.0	23.0	32.0	41.0	50.0	69.8	75.0
% Heating Capacity	71%	86%	100%	100%	100%	100%	100%	100%	100%	100%

MUZ-FH12NA MUZ-FH12NAH

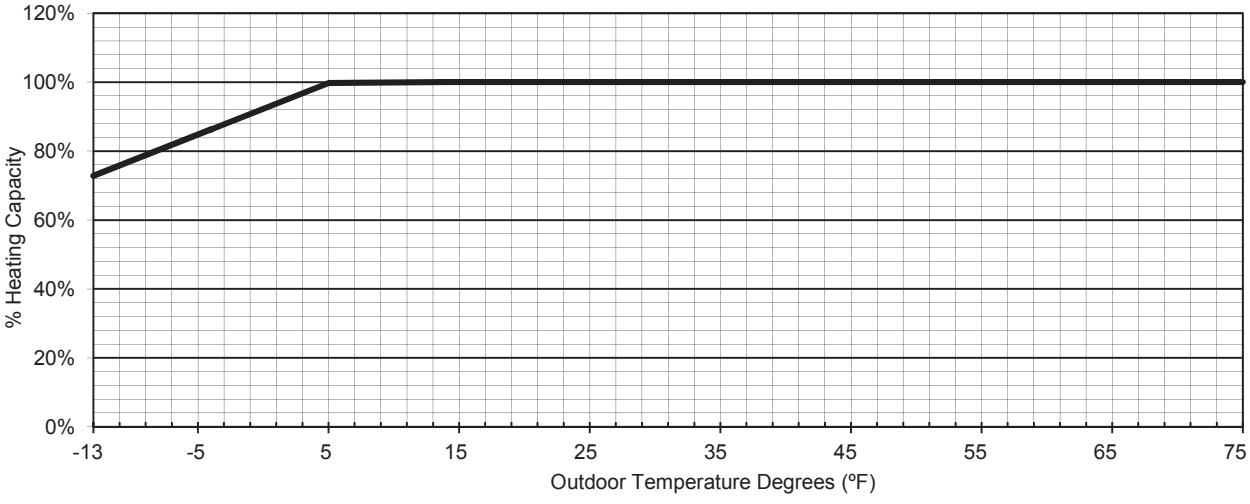

HEATING CAPACITY

Outdoor Temperature Degrees (°F)	-13.0	-4.0	5.0	14.0	23.0	32.0	41.0	50.0	69.8	75.0
% Heating Capacity	73%	86%	100%	100%	100%	100%	100%	100%	100%	100%

MUZ-FH15NA MUZ-FH15NAH

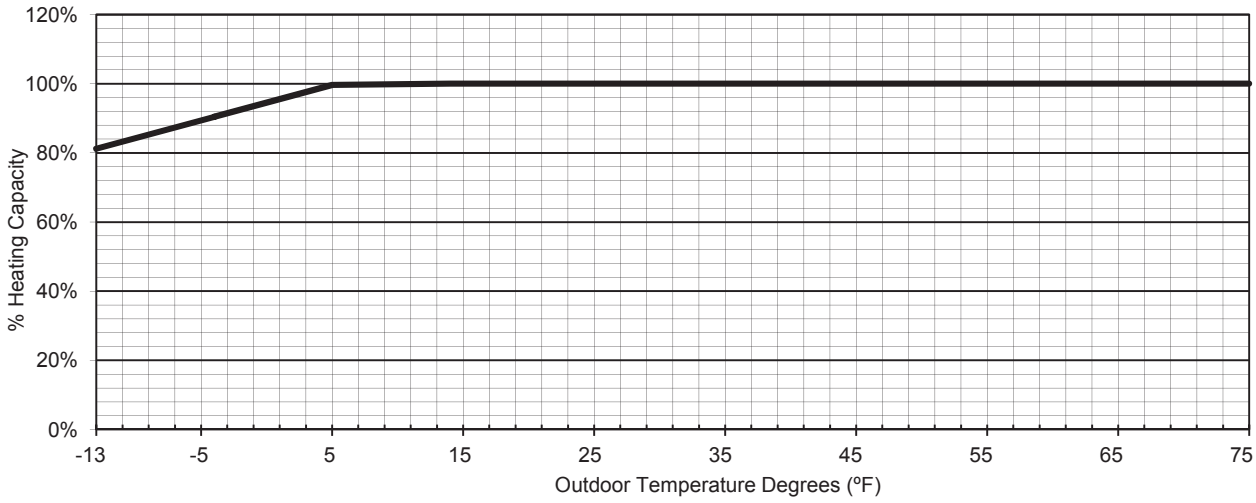

HEATING CAPACITY

Outdoor Temperature Degrees (°F)	-13.0	-4.0	5.0	14.0	23.0	32.0	41.0	50.0	69.8	75.0
% Heating Capacity	81%	90%	100%	100%	100%	100%	100%	100%	100%	100%

MUZ-FH18NA2 MUZ-FH18NAH2

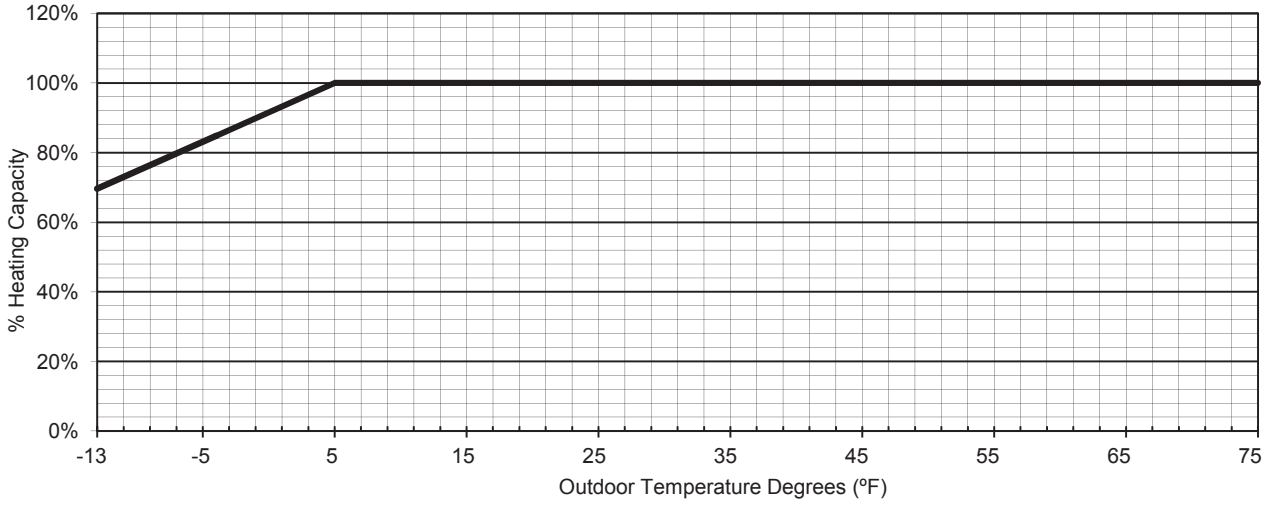

HEATING CAPACITY

Outdoor Temperature Degrees (°F)	-13.0	-4.0	5.0	14.0	23.0	32.0	41.0	50.0	69.8	75.0
% Heating Capacity	70%	85%	100%	100%	100%	100%	100%	100%	100%	100%

MUZ-FE09NAH

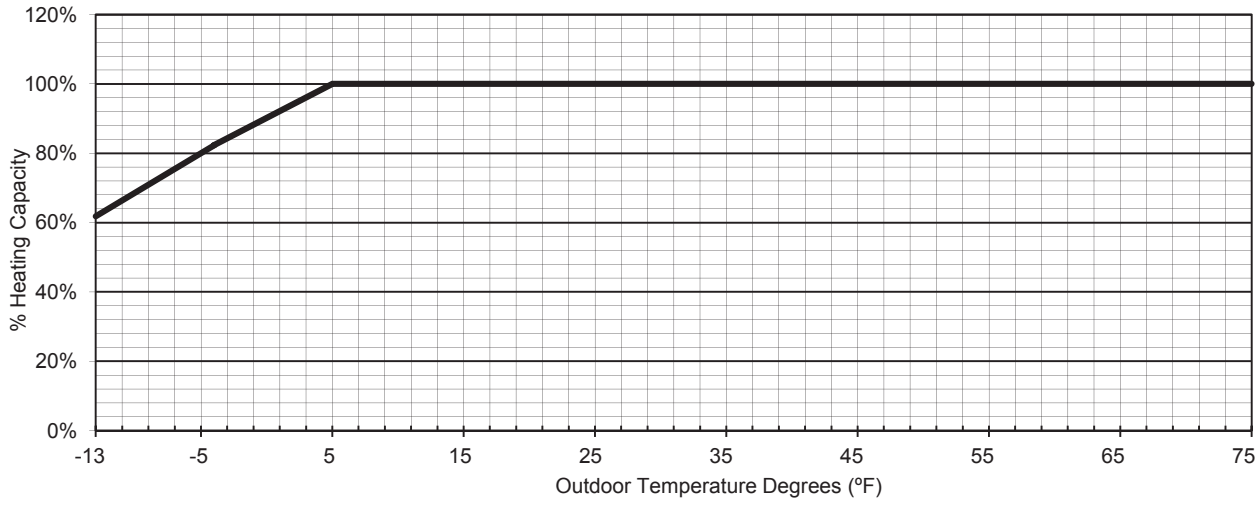

HEATING CAPACITY

Outdoor Temperature Degrees (ºF)	-13.0	-4.0	5.0	14.0	23.0	32.0	41.0	50.0	69.8	75.0
% Heating Capacity	62%	82%	100%	100%	100%	100%	100%	100%	100%	100%

MUZ-FE12NAH

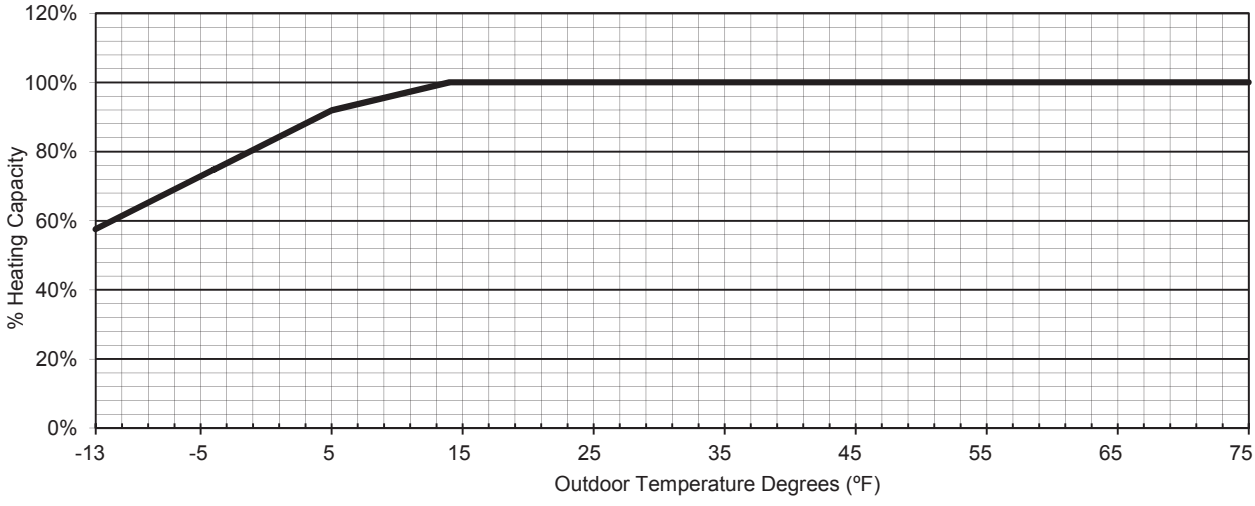

HEATING CAPACITY

Outdoor Temperature Degrees (ºF)	-13.0	-4.0	5.0	14.0	23.0	32.0	41.0	50.0	69.8	75.0
% Heating Capacity	58%	75%	92%	100%	100%	100%	100%	100%	100%	100%

MUZ-D30NA

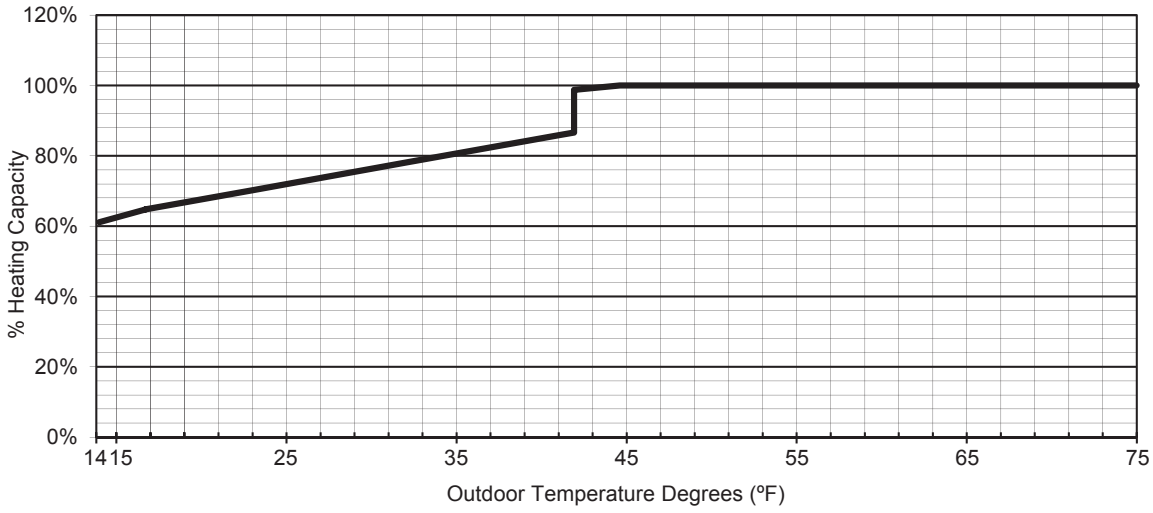

HEATING CAPACITY

Outdoor Temperature Degrees (ºF)	14.0	23.0	32.0	41.0	50.0	69.8	75.0
% Heating Capacity	61%	70%	78%	86%	100%	100%	100%

MUZ-D36NA

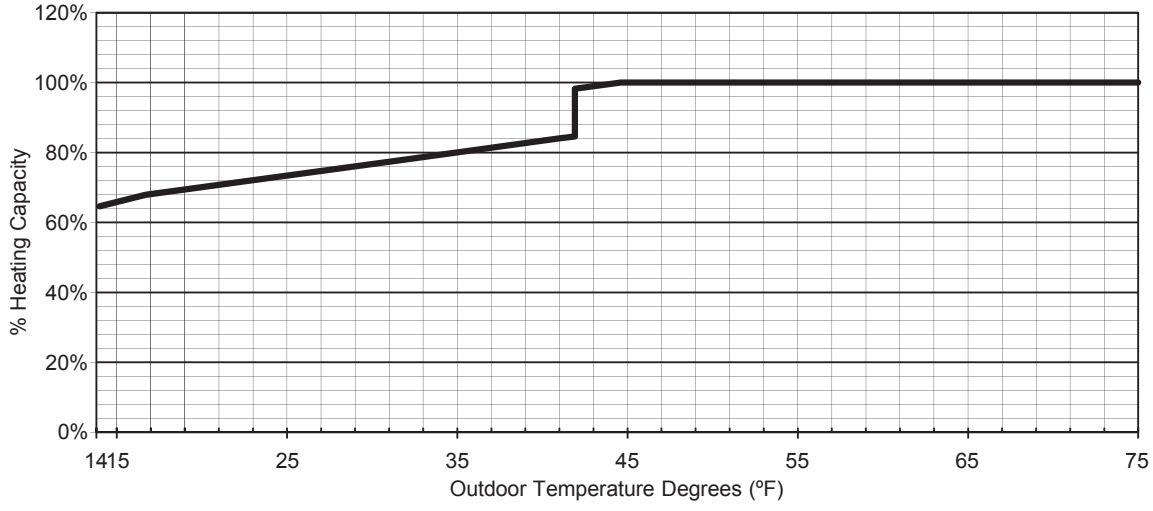

HEATING CAPACITY

Outdoor Temperature Degrees (ºF)	14.0	23.0	32.0	41.0	50.0	69.8	75.0
% Heating Capacity	65%	72%	78%	84%	100%	100%	100%

MUFZ-KJ09NAHZ

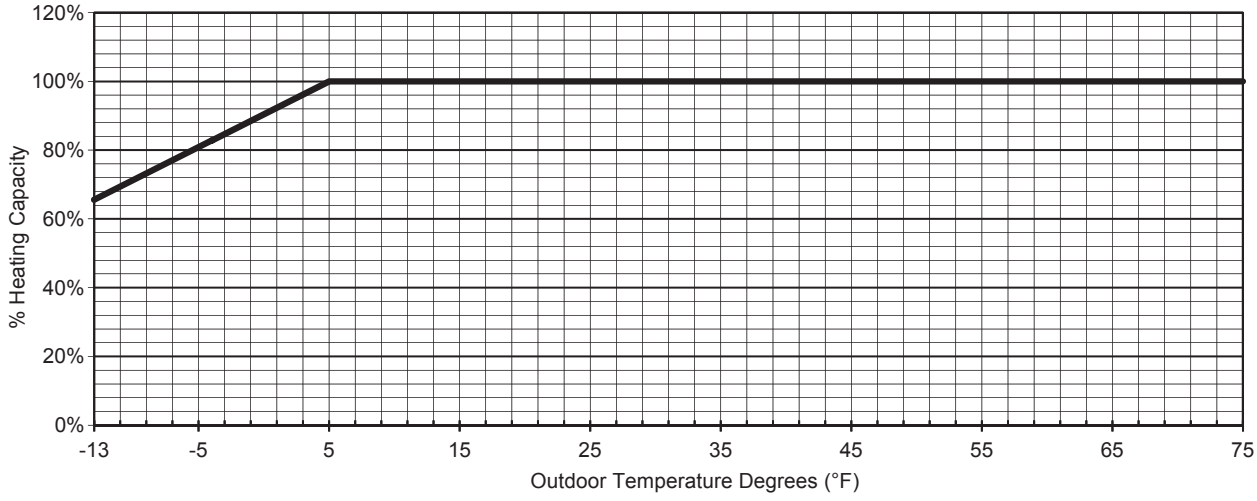

HEATING CAPACITY

Outdoor Temperature Degrees (°F)	-13.0	-4.0	5.0	14.0	23.0	32.0	41.0	50.0	69.8	75.0
% Heating Capacity	66%	83%	100%	100%	100%	100%	100%	100%	100%	100%

MUFZ-KJ12NAHZ

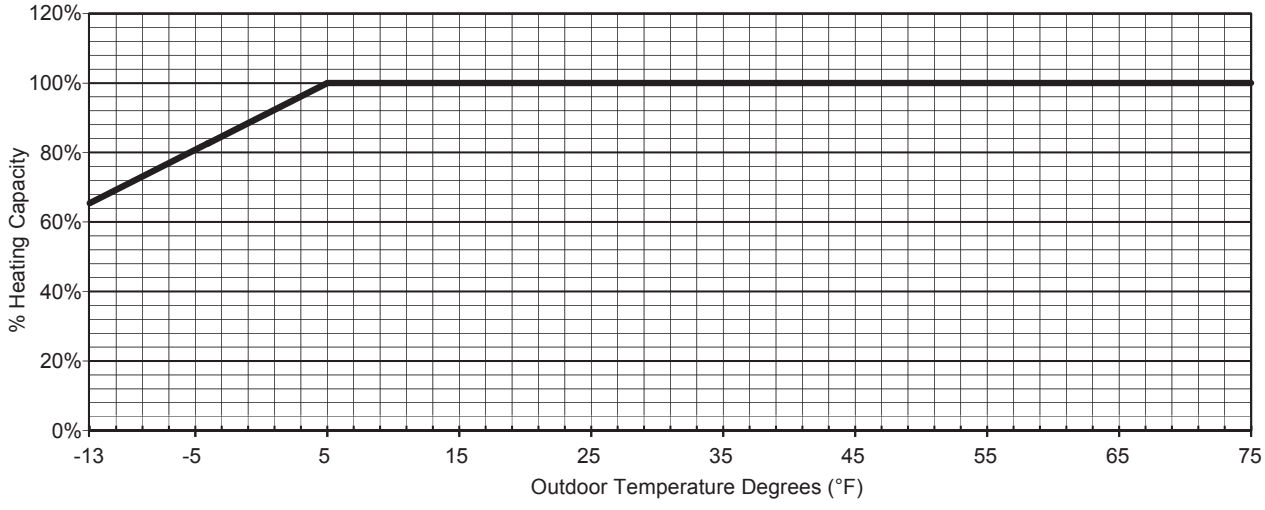

HEATING CAPACITY

Outdoor Temperature Degrees (°F)	-13.0	-4.0	5.0	14.0	23.0	32.0	41.0	50.0	69.8	75.0
% Heating Capacity	65%	83%	100%	100%	100%	100%	100%	100%	100%	100%

MUFZ-KJ15NAHZ

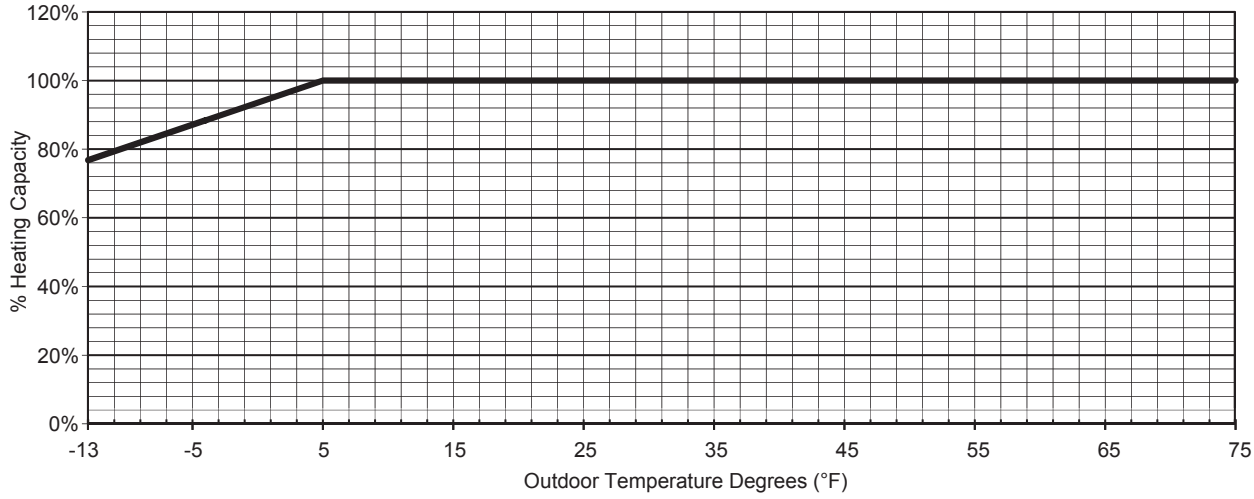

HEATING CAPACITY

Outdoor Temperature Degrees (°F)	-13.0	-4.0	5.0	14.0	23.0	32.0	41.0	50.0	69.8	75.0
% Heating Capacity	77%	88%	100%	100%	100%	100%	100%	100%	100%	100%

MUFZ-KJ18NAHZ

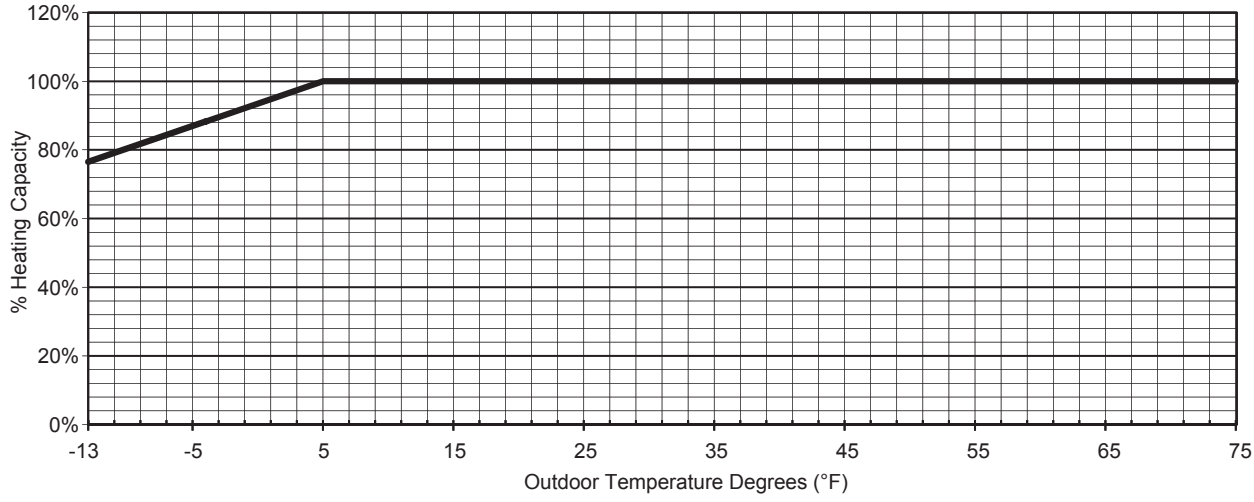

HEATING CAPACITY

Outdoor Temperature Degrees (°F)	-13.0	-4.0	5.0	14.0	23.0	32.0	41.0	50.0	69.8	75.0
% Heating Capacity	77%	88%	100%	100%	100%	100%	100%	100%	100%	100%

12 PERFORMANCE CHART

12-1. NON INVERTER COOLING CAPACITY MU-A09WA

CAPACITY (Btu/h): 9500 INPUT: 870 (W) SHF: 0.68

Indoor intake air DB(ºF)	Indoor intake air WB(ºF)	Outdoor intake air DB(ºF)															
		70				77				81				86			
		CA	SHC	SHF	P.C.	CA	SHC	SHF	P.C.	CA	SHC	SHF	P.C.	CA	SHC	SHF	P.C.
70	64	11163	5581	0.50	696	10688	5344	0.50	731	10260	5130	0.50	766	9880	4940	0.50	800
70	68	11638	4422	0.38	731	11163	4242	0.38	774	10830	4115	0.38	792	10450	3971	0.38	827
72	64	11163	6028	0.54	696	10688	5771	0.54	731	10260	5540	0.54	766	9880	5335	0.54	800
72	68	11638	4888	0.42	731	11163	4688	0.42	774	10830	4549	0.42	792	10450	4389	0.42	827
72	72	12113	3634	0.30	757	11685	3506	0.30	805	11400	3420	0.30	827	10925	3278	0.30	861
73	64	11163	6474	0.58	696	10688	6199	0.58	731	10260	5951	0.58	766	9880	5730	0.58	800
73	68	11638	5353	0.46	731	11163	5135	0.46	774	10830	4982	0.46	792	10450	4807	0.46	827
73	72	12113	4118	0.34	757	11685	3973	0.34	805	11400	3876	0.34	827	10925	3715	0.34	861
75	64	11163	6921	0.62	696	10688	6626	0.62	731	10260	6361	0.62	766	9880	6126	0.62	800
75	68	11638	5819	0.50	731	11163	5581	0.50	774	10830	5415	0.50	792	10450	5225	0.50	827
75	72	12113	4603	0.38	757	11685	4440	0.38	805	11400	4332	0.38	827	10925	4152	0.38	861
75	75	12730	3310	0.26	792	12255	3186	0.26	835	11970	3112	0.26	861	11590	3013	0.26	905
77	64	11163	7367	0.66	696	10688	7054	0.66	731	10260	6772	0.66	766	9880	6521	0.66	800
77	68	11638	6284	0.54	731	11163	6028	0.54	774	10830	5848	0.54	792	10450	5643	0.54	827
77	72	12113	5087	0.42	757	11685	4908	0.42	805	11400	4788	0.42	827	10925	4589	0.42	861
77	75	12730	3819	0.30	792	12255	3677	0.30	835	11970	3591	0.30	861	11590	3477	0.30	905
79	64	11163	7814	0.70	696	10688	7481	0.70	731	10260	7182	0.70	766	9880	6916	0.70	800
79	68	11638	6750	0.58	731	11163	6474	0.58	774	10830	6281	0.58	792	10450	6061	0.58	827
79	72	12113	5572	0.46	757	11685	5375	0.46	805	11400	5244	0.46	827	10925	5026	0.46	861
79	75	12730	4328	0.34	792	12255	4167	0.34	835	11970	4070	0.34	861	11590	3941	0.34	905
79	79	13110	2884	0.22	835	12730	2801	0.22	879	12540	2759	0.22	905	12160	2675	0.22	931
81	64	11163	8260	0.74	696	10688	7909	0.74	731	10260	7592	0.74	766	9880	7311	0.74	800
81	68	11638	7215	0.62	731	11163	6921	0.62	774	10830	6715	0.62	792	10450	6479	0.62	827
81	72	12113	6056	0.50	757	11685	5843	0.50	805	11400	5700	0.50	827	10925	5463	0.50	861
81	75	12730	4837	0.38	792	12255	4657	0.38	835	11970	4549	0.38	861	11590	4404	0.38	905
81	79	13110	3409	0.26	835	12730	3310	0.26	879	12540	3260	0.26	905	12160	3162	0.26	931
82	64	11163	8707	0.78	696	10688	8336	0.78	731	10260	8003	0.78	766	9880	7706	0.78	800
82	68	11638	7681	0.66	731	11163	7367	0.66	774	10830	7148	0.66	792	10450	6897	0.66	827
82	72	12113	6541	0.54	757	11685	6310	0.54	805	11400	6156	0.54	827	10925	5900	0.54	861
82	75	12730	5347	0.42	792	12255	5147	0.42	835	11970	5027	0.42	861	11590	4868	0.42	905
82	79	13110	3933	0.30	835	12730	3819	0.30	879	12540	3762	0.30	905	12160	3648	0.30	931
84	64	11163	9153	0.82	696	10688	8764	0.82	731	10260	8413	0.82	766	9880	8102	0.82	800
84	68	11638	8146	0.70	731	11163	7814	0.70	774	10830	7581	0.70	792	10450	7315	0.70	827
84	72	12113	7025	0.58	757	11685	6777	0.58	805	11400	6612	0.58	827	10925	6337	0.58	861
84	75	12730	5856	0.46	792	12255	5637	0.46	835	11970	5506	0.46	861	11590	5331	0.46	905
84	79	13110	4457	0.34	835	12730	4328	0.34	879	12540	4264	0.34	905	12160	4134	0.34	931
86	64	11163	9600	0.86	696	10688	9191	0.86	731	10260	8824	0.86	766	9880	8497	0.86	800
86	68	11638	8612	0.74	731	11163	8260	0.74	774	10830	8014	0.74	792	10450	7733	0.74	827
86	72	12113	7510	0.62	757	11685	7245	0.62	805	11400	7068	0.62	827	10925	6774	0.62	861
86	75	12730	6365	0.50	792	12255	6128	0.50	835	11970	5985	0.50	861	11590	5795	0.50	905
86	79	13110	4982	0.38	835	12730	4837	0.38	879	12540	4765	0.38	905	12160	4621	0.38	931
88	64	11163	10046	0.90	696	10688	9619	0.90	731	10260	9234	0.90	766	9880	8892	0.90	800
88	68	11638	9077	0.78	731	11163	8707	0.78	774	10830	8447	0.78	792	10450	8151	0.78	827
88	72	12113	7994	0.66	757	11685	7712	0.66	805	11400	7524	0.66	827	10925	7211	0.66	861
88	75	12730	6874	0.54	792	12255	6618	0.54	835	11970	6464	0.54	861	11590	6259	0.54	905
88	79	13110	5506	0.42	835	12730	5347	0.42	879	12540	5267	0.42	905	12160	5107	0.42	931
90	64	11163	10493	0.94	696	10688	10046	0.94	731	10260	9644	0.94	766	9880	9287	0.94	800
90	68	11638	9543	0.82	731	11163	9153	0.82	774	10830	8881	0.82	792	10450	8569	0.82	827
90	72	12113	8479	0.70	757	11685	8180	0.70	805	11400	7980	0.70	827	10925	7648	0.70	861
90	75	12730	7383	0.58	792	12255	7108	0.58	835	11970	6943	0.58	861	11590	6722	0.58	905
90	79	13110	6031	0.46	835	12730	5856	0.46	879	12540	5768	0.46	905	12160	5594	0.46	931

Note: CA: Capacity (Btu/h) SHC: Sensible heat capacity (Btu/h) SHF: Sensible heat factor P.C.: Power consumption (kW)
D.B.: Dry-bulb temperature W.B.: Wet-bulb temperature

MU-A09WA

CAPACITY (Btu/h): 9500 INPUT: 870 (W) SHF: 0.68

Indoor intake air DB(ºF)	Indoor intake air WB(ºF)	Outdoor intake air DB(ºF)											
		95				104				115			
		CA	SHC	SHF	P.C.	CA	SHC	SHF	P.C.	CA	SHC	SHF	P.C.
70	64	9310	4655	0.50	853	8550	4275	0.50	905	7885	3943	0.50	940
70	68	9785	3718	0.38	887	9120	3466	0.38	931	8455	3213	0.38	983
72	64	9310	5027	0.54	853	8550	4617	0.54	905	7885	4258	0.54	940
72	68	9785	4110	0.42	887	9120	3830	0.42	931	8455	3551	0.42	983
72	72	10355	3107	0.30	922	9690	2907	0.30	974	9025	2708	0.30	1009
73	64	9310	5400	0.58	853	8550	4959	0.58	905	7885	4573	0.58	940
73	68	9785	4501	0.46	887	9120	4195	0.46	931	8455	3889	0.46	983
73	72	10355	3521	0.34	922	9690	3295	0.34	974	9025	3069	0.34	1009
75	64	9310	5772	0.62	853	8550	5301	0.62	905	7885	4889	0.62	940
75	68	9785	4893	0.50	887	9120	4560	0.50	931	8455	4228	0.50	983
75	72	10355	3935	0.38	922	9690	3682	0.38	974	9025	3430	0.38	1009
75	75	10925	2841	0.26	957	10260	2668	0.26	1001	9690	2519	0.26	1044
77	64	9310	6145	0.66	853	8550	5643	0.66	905	7885	5204	0.66	940
77	68	9785	5284	0.54	887	9120	4925	0.54	931	8455	4566	0.54	983
77	72	10355	4349	0.42	922	9690	4070	0.42	974	9025	3791	0.42	1009
77	75	10925	3278	0.30	957	10260	3078	0.30	1001	9690	2907	0.30	1044
79	64	9310	6517	0.70	853	8550	5985	0.70	905	7885	5520	0.70	940
79	68	9785	5675	0.58	887	9120	5290	0.58	931	8455	4904	0.58	983
79	72	10355	4763	0.46	922	9690	4457	0.46	974	9025	4152	0.46	1009
79	75	10925	3715	0.34	957	10260	3488	0.34	1001	9690	3295	0.34	1044
79	79	11495	2529	0.22	992	10830	2383	0.22	1035	10165	2236	0.22	1079
81	64	9310	6889	0.74	853	8550	6327	0.74	905	7885	5835	0.74	940
81	68	9785	6067	0.62	887	9120	5654	0.62	931	8455	5242	0.62	983
81	72	10355	5178	0.50	922	9690	4845	0.50	974	9025	4513	0.50	1009
81	75	10925	4152	0.38	957	10260	3899	0.38	1001	9690	3682	0.38	1044
81	79	11495	2989	0.26	992	10830	2816	0.26	1035	10165	2643	0.26	1079
82	64	9310	7262	0.78	853	8550	6669	0.78	905	7885	6150	0.78	940
82	68	9785	6458	0.66	887	9120	6019	0.66	931	8455	5580	0.66	983
82	72	10355	5592	0.54	922	9690	5233	0.54	974	9025	4874	0.54	1009
82	75	10925	4589	0.42	957	10260	4309	0.42	1001	9690	4070	0.42	1044
82	79	11495	3449	0.30	992	10830	3249	0.30	1035	10165	3050	0.30	1079
84	64	9310	7634	0.82	853	8550	7011	0.82	905	7885	6466	0.82	940
84	68	9785	6850	0.70	887	9120	6384	0.70	931	8455	5919	0.70	983
84	72	10355	6006	0.58	922	9690	5620	0.58	974	9025	5235	0.58	1009
84	75	10925	5026	0.46	957	10260	4720	0.46	1001	9690	4457	0.46	1044
84	79	11495	3908	0.34	992	10830	3682	0.34	1035	10165	3456	0.34	1079
86	64	9310	8007	0.86	853	8550	7353	0.86	905	7885	6781	0.86	940
86	68	9785	7241	0.74	887	9120	6749	0.74	931	8455	6257	0.74	983
86	72	10355	6420	0.62	922	9690	6008	0.62	974	9025	5596	0.62	1009
86	75	10925	5463	0.50	957	10260	5130	0.50	1001	9690	4845	0.50	1044
86	79	11495	4368	0.38	992	10830	4115	0.38	1035	10165	3863	0.38	1079
88	64	9310	8379	0.90	853	8550	7695	0.90	905	7885	7097	0.90	940
88	68	9785	7632	0.78	887	9120	7114	0.78	931	8455	6595	0.78	983
88	72	10355	6834	0.66	922	9690	6395	0.66	974	9025	5957	0.66	1009
88	75	10925	5900	0.54	957	10260	5540	0.54	1001	9690	5233	0.54	1044
88	79	11495	4828	0.42	992	10830	4549	0.42	1035	10165	4269	0.42	1079
90	64	9310	8751	0.94	853	8550	8037	0.94	905	7885	7412	0.94	940
90	68	9785	8024	0.82	887	9120	7478	0.82	931	8455	6933	0.82	983
90	72	10355	7249	0.70	922	9690	6783	0.70	974	9025	6318	0.70	1009
90	75	10925	6337	0.58	957	10260	5951	0.58	1001	9690	5620	0.58	1044
90	79	11495	5288	0.46	992	10830	4982	0.46	1035	10165	4676	0.46	1079

Note: CA: Capacity (Btu/h) SHC: Sensible heat capacity (Btu/h) SHF: Sensible heat factor P.C.: Power consumption (kW)
D.B.: Dry-bulb temperature W.B.: Wet-bulb temperature

MU-A12WA

CAPACITY (Btu/h): 12000 INPUT: 1070 (W) SHF: 0.70

Indoor intake air DB(ºF)	Indoor intake air WB(ºF)	Outdoor intake air DB(ºF)															
		70				77				81				86			
		CA	SHC	SHF	P.C.	CA	SHC	SHF	P.C.	CA	SHC	SHF	P.C.	CA	SHC	SHF	P.C.
70	64	14100	7332	0.52	856	13500	7020	0.52	899	12960	6739	0.52	942	12480	6490	0.52	984
70	68	14700	5880	0.40	899	14100	5640	0.40	952	13680	5472	0.40	974	13200	5280	0.40	1017
72	64	14100	7896	0.56	856	13500	7560	0.56	899	12960	7258	0.56	942	12480	6989	0.56	984
72	68	14700	6468	0.44	899	14100	6204	0.44	952	13680	6019	0.44	974	13200	5808	0.44	1017
72	72	15300	4896	0.32	931	14760	4723	0.32	990	14400	4608	0.32	1017	13800	4416	0.32	1059
73	64	14100	8460	0.60	856	13500	8100	0.60	899	12960	7776	0.60	942	12480	7488	0.60	984
73	68	14700	7056	0.48	899	14100	6768	0.48	952	13680	6566	0.48	974	13200	6336	0.48	1017
73	72	15300	5508	0.36	931	14760	5314	0.36	990	14400	5184	0.36	1017	13800	4968	0.36	1059
75	64	14100	9024	0.64	856	13500	8640	0.64	899	12960	8294	0.64	942	12480	7987	0.64	984
75	68	14700	7644	0.52	899	14100	7332	0.52	952	13680	7114	0.52	974	13200	6864	0.52	1017
75	72	15300	6120	0.40	931	14760	5904	0.40	990	14400	5760	0.40	1017	13800	5520	0.40	1059
75	75	16080	4502	0.28	974	15480	4334	0.28	1027	15120	4234	0.28	1059	14640	4099	0.28	1113
77	64	14100	9588	0.68	856	13500	9180	0.68	899	12960	8813	0.68	942	12480	8486	0.68	984
77	68	14700	8232	0.56	899	14100	7896	0.56	952	13680	7661	0.56	974	13200	7392	0.56	1017
77	72	15300	6732	0.44	931	14760	6494	0.44	990	14400	6336	0.44	1017	13800	6072	0.44	1059
77	75	16080	5146	0.32	974	15480	4954	0.32	1027	15120	4838	0.32	1059	14640	4685	0.32	1113
79	64	14100	10152	0.72	856	13500	9720	0.72	899	12960	9331	0.72	942	12480	8986	0.72	984
79	68	14700	8820	0.60	899	14100	8460	0.60	952	13680	8208	0.60	974	13200	7920	0.60	1017
79	72	15300	7344	0.48	931	14760	7085	0.48	990	14400	6912	0.48	1017	13800	6624	0.48	1059
79	75	16080	5789	0.36	974	15480	5573	0.36	1027	15120	5443	0.36	1059	14640	5270	0.36	1113
79	79	16560	3974	0.24	1027	16080	3859	0.24	1081	15840	3802	0.24	1113	15360	3686	0.24	1145
81	64	14100	10716	0.76	856	13500	10260	0.76	899	12960	9850	0.76	942	12480	9485	0.76	984
81	68	14700	9408	0.64	899	14100	9024	0.64	952	13680	8755	0.64	974	13200	8448	0.64	1017
81	72	15300	7956	0.52	931	14760	7675	0.52	990	14400	7488	0.52	1017	13800	7176	0.52	1059
81	75	16080	6432	0.40	974	15480	6192	0.40	1027	15120	6048	0.40	1059	14640	5856	0.40	1113
81	79	16560	4637	0.28	1027	16080	4502	0.28	1081	15840	4435	0.28	1113	15360	4301	0.28	1145
82	64	14100	11280	0.80	856	13500	10800	0.80	899	12960	10368	0.80	942	12480	9984	0.80	984
82	68	14700	9996	0.68	899	14100	9588	0.68	952	13680	9302	0.68	974	13200	8976	0.68	1017
82	72	15300	8568	0.56	931	14760	8266	0.56	990	14400	8064	0.56	1017	13800	7728	0.56	1059
82	75	16080	7075	0.44	974	15480	6811	0.44	1027	15120	6653	0.44	1059	14640	6442	0.44	1113
82	79	16560	5299	0.32	1027	16080	5146	0.32	1081	15840	5069	0.32	1113	15360	4915	0.32	1145
84	64	14100	11844	0.84	856	13500	11340	0.84	899	12960	10886	0.84	942	12480	10483	0.84	984
84	68	14700	10584	0.72	899	14100	10152	0.72	952	13680	9850	0.72	974	13200	9504	0.72	1017
84	72	15300	9180	0.60	931	14760	8856	0.60	990	14400	8640	0.60	1017	13800	8280	0.60	1059
84	75	16080	7718	0.48	974	15480	7430	0.48	1027	15120	7258	0.48	1059	14640	7027	0.48	1113
84	79	16560	5962	0.36	1027	16080	5789	0.36	1081	15840	5702	0.36	1113	15360	5530	0.36	1145
86	64	14100	12408	0.88	856	13500	11880	0.88	899	12960	11405	0.88	942	12480	10982	0.88	984
86	68	14700	11172	0.76	899	14100	10716	0.76	952	13680	10397	0.76	974	13200	10032	0.76	1017
86	72	15300	9792	0.64	931	14760	9446	0.64	990	14400	9216	0.64	1017	13800	8832	0.64	1059
86	75	16080	8362	0.52	974	15480	8050	0.52	1027	15120	7862	0.52	1059	14640	7613	0.52	1113
86	79	16560	6624	0.40	1027	16080	6432	0.40	1081	15840	6336	0.40	1113	15360	6144	0.40	1145
88	64	14100	12972	0.92	856	13500	12420	0.92	899	12960	11923	0.92	942	12480	11482	0.92	984
88	68	14700	11760	0.80	899	14100	11280	0.80	952	13680	10944	0.80	974	13200	10560	0.80	1017
88	72	15300	10404	0.68	931	14760	10037	0.68	990	14400	9792	0.68	1017	13800	9384	0.68	1059
88	75	16080	9005	0.56	974	15480	8669	0.56	1027	15120	8467	0.56	1059	14640	8198	0.56	1113
88	79	16560	7286	0.44	1027	16080	7075	0.44	1081	15840	6970	0.44	1113	15360	6758	0.44	1145
90	64	14100	13536	0.96	856	13500	12960	0.96	899	12960	12442	0.96	942	12480	11981	0.96	984
90	68	14700	12348	0.84	899	14100	11844	0.84	952	13680	11491	0.84	974	13200	11088	0.84	1017
90	72	15300	11016	0.72	931	14760	10627	0.72	990	14400	10368	0.72	1017	13800	9936	0.72	1059
90	75	16080	9648	0.60	974	15480	9288	0.60	1027	15120	9072	0.60	1059	14640	8784	0.60	1113
90	79	16560	7949	0.48	1027	16080	7718	0.48	1081	15840	7603	0.48	1113	15360	7373	0.48	1145

Note: CA: Capacity (Btu/h) SHC: Sensible heat capacity (Btu/h) SHF: Sensible heat factor P.C.: Power consumption (kW)
D.B.: Dry-bulb temperature W.B.: Wet-bulb temperature

MU-A12WA

CAPACITY (Btu/h): 12000 INPUT: 1070 (W) SHF: 0.70

Indoor intake air DB(ºF)	Indoor intake air WB(ºF)	Outdoor intake air DB(ºF)											
		95				104				115			
		CA	SHC	SHF	P.C.	CA	SHC	SHF	P.C.	CA	SHC	SHF	P.C.
70	64	11760	6115	0.52	1049	10800	5616	0.52	1113	9960	5179	0.52	1156
70	68	12360	4944	0.40	1091	11520	4608	0.40	1145	10680	4272	0.40	1209
72	64	11760	6586	0.56	1049	10800	6048	0.56	1113	9960	5578	0.56	1156
72	68	12360	5438	0.44	1091	11520	5069	0.44	1145	10680	4699	0.44	1209
72	72	13080	4186	0.32	1134	12240	3917	0.32	1198	11400	3648	0.32	1241
73	64	11760	7056	0.60	1049	10800	6480	0.60	1113	9960	5976	0.60	1156
73	68	12360	5933	0.48	1091	11520	5530	0.48	1145	10680	5126	0.48	1209
73	72	13080	4709	0.36	1134	12240	4406	0.36	1198	11400	4104	0.36	1241
75	64	11760	7526	0.64	1049	10800	6912	0.64	1113	9960	6374	0.64	1156
75	68	12360	6427	0.52	1091	11520	5990	0.52	1145	10680	5554	0.52	1209
75	72	13080	5232	0.40	1134	12240	4896	0.40	1198	11400	4560	0.40	1241
75	75	13800	3864	0.28	1177	12960	3629	0.28	1231	12240	3427	0.28	1284
77	64	11760	7997	0.68	1049	10800	7344	0.68	1113	9960	6773	0.68	1156
77	68	12360	6922	0.56	1091	11520	6451	0.56	1145	10680	5981	0.56	1209
77	72	13080	5755	0.44	1134	12240	5386	0.44	1198	11400	5016	0.44	1241
77	75	13800	4416	0.32	1177	12960	4147	0.32	1231	12240	3917	0.32	1284
79	64	11760	8467	0.72	1049	10800	7776	0.72	1113	9960	7171	0.72	1156
79	68	12360	7416	0.60	1091	11520	6912	0.60	1145	10680	6408	0.60	1209
79	72	13080	6278	0.48	1134	12240	5875	0.48	1198	11400	5472	0.48	1241
79	75	13800	4968	0.36	1177	12960	4666	0.36	1231	12240	4406	0.36	1284
79	79	14520	3485	0.24	1220	13680	3283	0.24	1273	12840	3082	0.24	1327
81	64	11760	8938	0.76	1049	10800	8208	0.76	1113	9960	7570	0.76	1156
81	68	12360	7910	0.64	1091	11520	7373	0.64	1145	10680	6835	0.64	1209
81	72	13080	6802	0.52	1134	12240	6365	0.52	1198	11400	5928	0.52	1241
81	75	13800	5520	0.40	1177	12960	5184	0.40	1231	12240	4896	0.40	1284
81	79	14520	4066	0.28	1220	13680	3830	0.28	1273	12840	3595	0.28	1327
82	64	11760	9408	0.80	1049	10800	8640	0.80	1113	9960	7968	0.80	1156
82	68	12360	8405	0.68	1091	11520	7834	0.68	1145	10680	7262	0.68	1209
82	72	13080	7325	0.56	1134	12240	6854	0.56	1198	11400	6384	0.56	1241
82	75	13800	6072	0.44	1177	12960	5702	0.44	1231	12240	5386	0.44	1284
82	79	14520	4646	0.32	1220	13680	4378	0.32	1273	12840	4109	0.32	1327
84	64	11760	9878	0.84	1049	10800	9072	0.84	1113	9960	8366	0.84	1156
84	68	12360	8899	0.72	1091	11520	8294	0.72	1145	10680	7690	0.72	1209
84	72	13080	7848	0.60	1134	12240	7344	0.60	1198	11400	6840	0.60	1241
84	75	13800	6624	0.48	1177	12960	6221	0.48	1231	12240	5875	0.48	1284
84	79	14520	5227	0.36	1220	13680	4925	0.36	1273	12840	4622	0.36	1327
86	64	11760	10349	0.88	1049	10800	9504	0.88	1113	9960	8765	0.88	1156
86	68	12360	9394	0.76	1091	11520	8755	0.76	1145	10680	8117	0.76	1209
86	72	13080	8371	0.64	1134	12240	7834	0.64	1198	11400	7296	0.64	1241
86	75	13800	7176	0.52	1177	12960	6739	0.52	1231	12240	6365	0.52	1284
86	79	14520	5808	0.40	1220	13680	5472	0.40	1273	12840	5136	0.40	1327
88	64	11760	10819	0.92	1049	10800	9936	0.92	1113	9960	9163	0.92	1156
88	68	12360	9888	0.80	1091	11520	9216	0.80	1145	10680	8544	0.80	1209
88	72	13080	8894	0.68	1134	12240	8323	0.68	1198	11400	7752	0.68	1241
88	75	13800	7728	0.56	1177	12960	7258	0.56	1231	12240	6854	0.56	1284
88	79	14520	6389	0.44	1220	13680	6019	0.44	1273	12840	5650	0.44	1327
90	64	11760	11290	0.96	1049	10800	10368	0.96	1113	9960	9562	0.96	1156
90	68	12360	10382	0.84	1091	11520	9677	0.84	1145	10680	8971	0.84	1209
90	72	13080	9418	0.72	1134	12240	8813	0.72	1198	11400	8208	0.72	1241
90	75	13800	8280	0.60	1177	12960	7776	0.60	1231	12240	7344	0.60	1284
90	79	14520	6970	0.48	1220	13680	6566	0.48	1273	12840	6163	0.48	1327

Note: CA: Capacity (Btu/h) SHC: Sensible heat capacity (Btu/h) SHF: Sensible heat factor P.C.: Power consumption (kW)
D.B.: Dry-bulb temperature W.B.: Wet-bulb temperature

12-2. INVERTER
COOLING CAPACITY
MUZ-GL09NA MUZ-GL09NAH MUY-GL09NA

CAPACITY (Btu/h): 9000 INPUT (W): 585 SHF: 0.82

INDOOR DB (°F)	INDOOR WB (°F)	OUTDOOR DB (°F)															
		70				77				81				86			
		CA	SHC	SHF	P.C.	CA	SHC	SHF	P.C.	CA	SHC	SHF	P.C.	CA	SHC	SHF	P.C.
70	64	10575	6768	0.64	468	10125	6480	0.64	491	9720	6221	0.64	515	9360	5990	0.64	538
70	68	11025	5733	0.52	491	10575	5499	0.52	521	10260	5335	0.52	532	9900	5148	0.52	556
72	64	10575	7191	0.68	468	10125	6885	0.68	491	9720	6610	0.68	515	9360	6365	0.68	538
72	68	11025	6174	0.56	491	10575	5922	0.56	521	10260	5746	0.56	532	9900	5544	0.56	556
72	72	11475	5049	0.44	509	11070	4871	0.44	541	10800	4752	0.44	556	10350	4554	0.44	579
73	64	10575	7614	0.72	468	10125	7290	0.72	491	9720	6998	0.72	515	9360	6739	0.72	538
73	68	11025	6615	0.60	491	10575	6345	0.60	521	10260	6156	0.60	532	9900	5940	0.60	556
73	72	11475	5508	0.48	509	11070	5314	0.48	541	10800	5184	0.48	556	10350	4968	0.48	579
75	64	10575	8037	0.76	468	10125	7695	0.76	491	9720	7387	0.76	515	9360	7114	0.76	538
75	68	11025	7056	0.64	491	10575	6768	0.64	521	10260	6566	0.64	532	9900	6336	0.64	556
75	72	11475	5967	0.52	509	11070	5756	0.52	541	10800	5616	0.52	556	10350	5382	0.52	579
75	75	12060	4824	0.40	532	11610	4644	0.40	562	11340	4536	0.40	579	10980	4392	0.40	608
77	64	10575	8460	0.80	468	10125	8100	0.80	491	9720	7776	0.80	515	9360	7488	0.80	538
77	68	11025	7497	0.68	491	10575	7191	0.68	521	10260	6977	0.68	532	9900	6732	0.68	556
77	72	11475	6426	0.56	509	11070	6199	0.56	541	10800	6048	0.56	556	10350	5796	0.56	579
77	75	12060	5306	0.44	532	11610	5108	0.44	562	11340	4990	0.44	579	10980	4831	0.44	608
79	64	10575	8883	0.84	468	10125	8505	0.84	491	9720	8165	0.84	515	9360	7862	0.84	538
79	68	11025	7938	0.72	491	10575	7614	0.72	521	10260	7387	0.72	532	9900	7128	0.72	556
79	72	11475	6885	0.60	509	11070	6642	0.60	541	10800	6480	0.60	556	10350	6210	0.60	579
79	75	12060	5789	0.48	532	11610	5573	0.48	562	11340	5443	0.48	579	10980	5270	0.48	608
79	79	12420	4471	0.36	562	12060	4342	0.36	591	11880	4277	0.36	608	11520	4147	0.36	626
81	64	10575	9306	0.88	468	10125	8910	0.88	491	9720	8554	0.88	515	9360	8237	0.88	538
81	68	11025	8379	0.76	491	10575	8037	0.76	521	10260	7798	0.76	532	9900	7524	0.76	556
81	72	11475	7344	0.64	509	11070	7085	0.64	541	10800	6912	0.64	556	10350	6624	0.64	579
81	75	12060	6271	0.52	532	11610	6037	0.52	562	11340	5897	0.52	579	10980	5710	0.52	608
81	79	12420	4968	0.40	562	12060	4824	0.40	591	11880	4752	0.40	608	11520	4608	0.40	626
82	64	10575	9729	0.92	468	10125	9315	0.92	491	9720	8942	0.92	515	9360	8611	0.92	538
82	68	11025	8820	0.80	491	10575	8460	0.80	521	10260	8208	0.80	532	9900	7920	0.80	556
82	72	11475	7803	0.68	509	11070	7528	0.68	541	10800	7344	0.68	556	10350	7038	0.68	579
82	75	12060	6754	0.56	532	11610	6502	0.56	562	11340	6350	0.56	579	10980	6149	0.56	608
82	79	12420	5465	0.44	562	12060	5306	0.44	591	11880	5227	0.44	608	11520	5069	0.44	626
84	64	10575	10152	0.96	468	10125	9720	0.96	491	9720	9331	0.96	515	9360	8986	0.96	538
84	68	11025	9261	0.84	491	10575	8883	0.84	521	10260	8618	0.84	532	9900	8316	0.84	556
84	72	11475	8262	0.72	509	11070	7970	0.72	541	10800	7776	0.72	556	10350	7452	0.72	579
84	75	12060	7236	0.60	532	11610	6966	0.60	562	11340	6804	0.60	579	10980	6588	0.60	608
84	79	12420	5962	0.48	562	12060	5789	0.48	591	11880	5702	0.48	608	11520	5530	0.48	626
86	64	10575	10575	1.00	468	10125	10125	1.00	491	9720	9720	1.00	515	9360	9360	1.00	538
86	68	11025	9702	0.88	491	10575	9306	0.88	521	10260	9029	0.88	532	9900	8712	0.88	556
86	72	11475	8721	0.76	509	11070	8413	0.76	541	10800	8208	0.76	556	10350	7866	0.76	579
86	75	12060	7718	0.64	532	11610	7430	0.64	562	11340	7258	0.64	579	10980	7027	0.64	608
86	79	12420	6458	0.52	562	12060	6271	0.52	591	11880	6178	0.52	608	11520	5990	0.52	626
88	64	10575	10575	1.00	468	10125	10125	1.00	491	9720	9720	1.00	515	9360	9360	1.00	538
88	68	11025	10143	0.92	491	10575	9729	0.92	521	10260	9439	0.92	532	9900	9108	0.92	556
88	72	11475	9180	0.80	509	11070	8856	0.80	541	10800	8640	0.80	556	10350	8280	0.80	579
88	75	12060	8201	0.68	532	11610	7895	0.68	562	11340	7711	0.68	579	10980	7466	0.68	608
88	79	12420	6955	0.56	562	12060	6754	0.56	591	11880	6653	0.56	608	11520	6451	0.56	626
90	64	10575	10575	1.00	468	10125	10125	1.00	491	9720	9720	1.00	515	9360	9360	1.00	538
90	68	11025	10584	0.96	491	10575	10152	0.96	521	10260	9850	0.96	532	9900	9504	0.96	556
90	72	11475	9639	0.84	509	11070	9299	0.84	541	10800	9072	0.84	556	10350	8694	0.84	579
90	75	12060	8683	0.72	532	11610	8359	0.72	562	11340	8165	0.72	579	10980	7906	0.72	608
90	79	12420	7452	0.60	562	12060	7236	0.60	591	11880	7128	0.60	608	11520	6912	0.60	626

NOTE CA: Capacity (Btu/h) SHF: Sensible heat factor DB: Dry-bulb temperature
SHC: Sensible heat capacity (Btu/h) P.C. : Power consumption (W) WB: Wet-bulb temperature

MUZ-GL09NA MUZ-GL09NAH MUY-GL09NA

CAPACITY (Btu/h): 9000 INPUT (W): 585 SHF: 0.82

INDOOR DB (°F)	INDOOR WB (°F)	OUTDOOR DB (°F)											
		95				104				115			
		CA	SHC	SHF	P.C.	CA	SHC	SHF	P.C.	CA	SHC	SHF	P.C.
70	64	8820	5645	0.64	573	8100	5184	0.64	608	7470	4781	0.64	632
70	68	9270	4820	0.52	597	8640	4493	0.52	626	8010	4165	0.52	661
72	64	8820	5998	0.68	573	8100	5508	0.68	608	7470	5080	0.68	632
72	68	9270	5191	0.56	597	8640	4838	0.56	626	8010	4486	0.56	661
72	72	9810	4316	0.44	620	9180	4039	0.44	655	8550	3762	0.44	679
73	64	8820	6350	0.72	573	8100	5832	0.72	608	7470	5378	0.72	632
73	68	9270	5562	0.60	597	8640	5184	0.60	626	8010	4806	0.60	661
73	72	9810	4709	0.48	620	9180	4406	0.48	655	8550	4104	0.48	679
75	64	8820	6703	0.76	573	8100	6156	0.76	608	7470	5677	0.76	632
75	68	9270	5933	0.64	597	8640	5530	0.64	626	8010	5126	0.64	661
75	72	9810	5101	0.52	620	9180	4774	0.52	655	8550	4446	0.52	679
75	75	10350	4140	0.40	644	9720	3888	0.40	673	9180	3672	0.40	702
77	64	8820	7056	0.80	573	8100	6480	0.80	608	7470	5976	0.8	632
77	68	9270	6304	0.68	597	8640	5875	0.68	626	8010	5447	0.68	661
77	72	9810	5494	0.56	620	9180	5141	0.56	655	8550	4788	0.56	679
77	75	10350	4554	0.44	644	9720	4277	0.44	673	9180	4039	0.44	702
79	64	8820	7409	0.84	573	8100	6804	0.84	608	7470	6275	0.84	632
79	68	9270	6674	0.72	597	8640	6221	0.72	626	8010	5767	0.72	661
79	72	9810	5886	0.60	620	9180	5508	0.60	655	8550	5130	0.60	679
79	75	10350	4968	0.48	644	9720	4666	0.48	673	9180	4406	0.48	702
79	79	10890	3920	0.36	667	10260	3694	0.36	696	9630	3467	0.36	725
81	64	8820	7762	0.88	573	8100	7128	0.88	608	7470	6574	0.88	632
81	68	9270	7045	0.76	597	8640	6566	0.76	626	8010	6088	0.76	661
81	72	9810	6278	0.64	620	9180	5875	0.64	655	8550	5472	0.64	679
81	75	10350	5382	0.52	644	9720	5054	0.52	673	9180	4774	0.52	702
81	79	10890	4356	0.40	667	10260	4104	0.40	696	9630	3852	0.40	725
82	64	8820	8114	0.92	573	8100	7452	0.92	608	7470	6872	0.92	632
82	68	9270	7416	0.80	597	8640	6912	0.80	626	8010	6408	0.80	661
82	72	9810	6671	0.68	620	9180	6242	0.68	655	8550	5814	0.68	679
82	75	10350	5796	0.56	644	9720	5443	0.56	673	9180	5141	0.56	702
82	79	10890	4792	0.44	667	10260	4514	0.44	696	9630	4237	0.44	725
84	64	8820	8467	0.96	573	8100	7776	0.96	608	7470	7171	0.96	632
84	68	9270	7787	0.84	597	8640	7258	0.84	626	8010	6728	0.84	661
84	72	9810	7063	0.72	620	9180	6610	0.72	655	8550	6156	0.72	679
84	75	10350	6210	0.60	644	9720	5832	0.60	673	9180	5508	0.60	702
84	79	10890	5227	0.48	667	10260	4925	0.48	696	9630	4622	0.48	725
86	64	8820	8820	1.00	573	8100	8100	1.00	608	7470	7470	1.00	632
86	68	9270	8158	0.88	597	8640	7603	0.88	626	8010	7049	0.88	661
86	72	9810	7456	0.76	620	9180	6977	0.76	655	8550	6498	0.76	679
86	75	10350	6624	0.64	644	9720	6221	0.64	673	9180	5875	0.64	702
86	79	10890	5663	0.52	667	10260	5335	0.52	696	9630	5008	0.52	725
88	64	8820	8820	1.00	573	8100	8100	1.00	608	7470	7470	1.00	632
88	68	9270	8528	0.92	597	8640	7949	0.92	626	8010	7369	0.92	661
88	72	9810	7848	0.80	620	9180	7344	0.80	655	8550	6840	0.80	679
88	75	10350	7038	0.68	644	9720	6610	0.68	673	9180	6242	0.68	702
88	79	10890	6098	0.56	667	10260	5746	0.56	696	9630	5393	0.56	725
90	64	8820	8820	1.00	573	8100	8100	1.00	608	7470	7470	1.00	632
90	68	9270	8899	0.96	597	8640	8294	0.96	626	8010	7690	0.96	661
90	72	9810	8240	0.84	620	9180	7711	0.84	655	8550	7182	0.84	679
90	75	10350	7452	0.72	644	9720	6998	0.72	673	9180	6610	0.72	702
90	79	10890	6534	0.60	667	10260	6156	0.60	696	9630	5778	0.60	725

NOTE CA: Capacity (Btu/h) SHF: Sensible heat factor DB: Dry-bulb temperature
SHC: Sensible heat capacity (Btu/h) P.C. : Power consumption (W) WB: Wet-bulb temperature

MUZ-GL12NA MUZ-GL12NAH MUY-GL12NA

CAPACITY (Btu/h): 12000 INPUT (W): 920 SHF: 0.77

INDOOR DB (°F)	INDOOR WB (°F)	OUTDOOR DB (°F)															
		70				77				81				86			
		CA	SHC	SHF	P.C.	CA	SHC	SHF	P.C.	CA	SHC	SHF	P.C.	CA	SHC	SHF	P.C.
70	64	14100	8319	0.59	736	13500	7965	0.59	773	12960	7646	0.59	810	12480	7363	0.59	846
70	68	14700	6909	0.47	773	14100	6627	0.47	819	13680	6430	0.47	837	13200	6204	0.47	874
72	64	14100	8883	0.63	736	13500	8505	0.63	773	12960	8165	0.63	810	12480	7862	0.63	846
72	68	14700	7497	0.51	773	14100	7191	0.51	819	13680	6977	0.51	837	13200	6732	0.51	874
72	72	15300	5967	0.39	800	14760	5756	0.39	851	14400	5616	0.39	874	13800	5382	0.39	911
73	64	14100	9447	0.67	736	13500	9045	0.67	773	12960	8683	0.67	810	12480	8362	0.67	846
73	68	14700	8085	0.55	773	14100	7755	0.55	819	13680	7524	0.55	837	13200	7260	0.55	874
73	72	15300	6579	0.43	800	14760	6347	0.43	851	14400	6192	0.43	874	13800	5934	0.43	911
75	64	14100	10011	0.71	736	13500	9585	0.71	773	12960	9202	0.71	810	12480	8861	0.71	846
75	68	14700	8673	0.59	773	14100	8319	0.59	819	13680	8071	0.59	837	13200	7788	0.59	874
75	72	15300	7191	0.47	800	14760	6937	0.47	851	14400	6768	0.47	874	13800	6486	0.47	911
75	75	16080	5628	0.35	837	15480	5418	0.35	883	15120	5292	0.35	911	14640	5124	0.35	957
77	64	14100	10575	0.75	736	13500	10125	0.75	773	12960	9720	0.75	810	12480	9360	0.75	846
77	68	14700	9261	0.63	773	14100	8883	0.63	819	13680	8618	0.63	837	13200	8316	0.63	874
77	72	15300	7803	0.51	800	14760	7528	0.51	851	14400	7344	0.51	874	13800	7038	0.51	911
77	75	16080	6271	0.39	837	15480	6037	0.39	883	15120	5897	0.39	911	14640	5710	0.39	957
79	64	14100	11139	0.79	736	13500	10665	0.79	773	12960	10238	0.79	810	12480	9859	0.79	846
79	68	14700	9849	0.67	773	14100	9447	0.67	819	13680	9166	0.67	837	13200	8844	0.67	874
79	72	15300	8415	0.55	800	14760	8118	0.55	851	14400	7920	0.55	874	13800	7590	0.55	911
79	75	16080	6914	0.43	837	15480	6656	0.43	883	15120	6502	0.43	911	14640	6295	0.43	957
79	79	16560	5134	0.31	883	16080	4985	0.31	929	15840	4910	0.31	957	15360	4762	0.31	984
81	64	14100	11703	0.83	736	13500	11205	0.83	773	12960	10757	0.83	810	12480	10358	0.83	846
81	68	14700	10437	0.71	773	14100	10011	0.71	819	13680	9713	0.71	837	13200	9372	0.71	874
81	72	15300	9027	0.59	800	14760	8708	0.59	851	14400	8496	0.59	874	13800	8142	0.59	911
81	75	16080	7558	0.47	837	15480	7276	0.47	883	15120	7106	0.47	911	14640	6881	0.47	957
81	79	16560	5796	0.35	883	16080	5628	0.35	929	15840	5544	0.35	957	15360	5376	0.35	984
82	64	14100	12267	0.87	736	13500	11745	0.87	773	12960	11275	0.87	810	12480	10858	0.87	846
82	68	14700	11025	0.75	773	14100	10575	0.75	819	13680	10260	0.75	837	13200	9900	0.75	874
82	72	15300	9639	0.63	800	14760	9299	0.63	851	14400	9072	0.63	874	13800	8694	0.63	911
82	75	16080	8201	0.51	837	15480	7895	0.51	883	15120	7711	0.51	911	14640	7466	0.51	957
82	79	16560	6458	0.39	883	16080	6271	0.39	929	15840	6178	0.39	957	15360	5990	0.39	984
84	64	14100	12831	0.91	736	13500	12285	0.91	773	12960	11794	0.91	810	12480	11357	0.91	846
84	68	14700	11613	0.79	773	14100	11139	0.79	819	13680	10807	0.79	837	13200	10428	0.79	874
84	72	15300	10251	0.67	800	14760	9889	0.67	851	14400	9648	0.67	874	13800	9246	0.67	911
84	75	16080	8844	0.55	837	15480	8514	0.55	883	15120	8316	0.55	911	14640	8052	0.55	957
84	79	16560	7121	0.43	883	16080	6914	0.43	929	15840	6811	0.43	957	15360	6605	0.43	984
86	64	14100	13395	0.95	736	13500	12825	0.95	773	12960	12312	0.95	810	12480	11856	0.95	846
86	68	14700	12201	0.83	773	14100	11703	0.83	819	13680	11354	0.83	837	13200	10956	0.83	874
86	72	15300	10863	0.71	800	14760	10480	0.71	851	14400	10224	0.71	874	13800	9798	0.71	911
86	75	16080	9487	0.59	837	15480	9133	0.59	883	15120	8921	0.59	911	14640	8638	0.59	957
86	79	16560	7783	0.47	883	16080	7558	0.47	929	15840	7445	0.47	957	15360	7219	0.47	984
88	64	14100	13959	0.99	736	13500	13365	0.99	773	12960	12830	0.99	810	12480	12355	0.99	846
88	68	14700	12789	0.87	773	14100	12267	0.87	819	13680	11902	0.87	837	13200	11484	0.87	874
88	72	15300	11475	0.75	800	14760	11070	0.75	851	14400	10800	0.75	874	13800	10350	0.75	911
88	75	16080	10130	0.63	837	15480	9752	0.63	883	15120	9526	0.63	911	14640	9223	0.63	957
88	79	16560	8446	0.51	883	16080	8201	0.51	929	15840	8078	0.51	957	15360	7834	0.51	984
90	64	14100	14100	1.00	736	13500	13500	1.00	773	12960	12960	1.00	810	12480	12480	1.00	846
90	68	14700	13377	0.91	773	14100	12831	0.91	819	13680	12449	0.91	837	13200	12012	0.91	874
90	72	15300	12087	0.79	800	14760	11660	0.79	851	14400	11376	0.79	874	13800	10902	0.79	911
90	75	16080	10774	0.67	837	15480	10372	0.67	883	15120	10130	0.67	911	14640	9809	0.67	957
90	79	16560	9108	0.55	883	16080	8844	0.55	929	15840	8712	0.55	957	15360	8448	0.55	984

NOTE CA: Capacity (Btu/h) SHF: Sensible heat factor DB: Dry-bulb temperature
SHC: Sensible heat capacity (Btu/h) P.C. : Power consumption (W) WB: Wet-bulb temperature

MUZ-GL12NA MUZ-GL12NAH MUY-GL12NA

CAPACITY (Btu/h): 12000 INPUT (W): 920 SHF: 0.77

INDOOR DB (°F)	INDOOR WB (°F)	OUTDOOR DB (°F)											
		95				104				115			
		CA	SHC	SHF	P.C.	CA	SHC	SHF	P.C.	CA	SHC	SHF	P.C.
70	64	11760	6938	0.59	902	10800	6372	0.59	957	9960	5876	0.59	994
70	68	12360	5809	0.47	938	11520	5414	0.47	984	10680	5020	0.47	1040
72	64	11760	7409	0.63	902	10800	6804	0.63	957	9960	6275	0.63	994
72	68	12360	6304	0.51	938	11520	5875	0.51	984	10680	5447	0.51	1040
72	72	13080	5101	0.39	975	12240	4774	0.39	1030	11400	4446	0.39	1067
73	64	11760	7879	0.67	902	10800	7236	0.67	957	9960	6673	0.67	994
73	68	12360	6798	0.55	938	11520	6336	0.55	984	10680	5874	0.55	1040
73	72	13080	5624	0.43	975	12240	5263	0.43	1030	11400	4902	0.43	1067
75	64	11760	8350	0.71	902	10800	7668	0.71	957	9960	7072	0.71	994
75	68	12360	7292	0.59	938	11520	6797	0.59	984	10680	6301	0.59	1040
75	72	13080	6148	0.47	975	12240	5753	0.47	1030	11400	5358	0.47	1067
75	75	13800	4830	0.35	1012	12960	4536	0.35	1058	12240	4284	0.35	1104
77	64	11760	8820	0.75	902	10800	8100	0.75	957	9960	7470	0.75	994
77	68	12360	7787	0.63	938	11520	7258	0.63	984	10680	6728	0.63	1040
77	72	13080	6671	0.51	975	12240	6242	0.51	1030	11400	5814	0.51	1067
77	75	13800	5382	0.39	1012	12960	5054	0.39	1058	12240	4774	0.39	1104
79	64	11760	9290	0.79	902	10800	8532	0.79	957	9960	7868	0.79	994
79	68	12360	8281	0.67	938	11520	7718	0.67	984	10680	7156	0.67	1040
79	72	13080	7194	0.55	975	12240	6732	0.55	1030	11400	6270	0.55	1067
79	75	13800	5934	0.43	1012	12960	5573	0.43	1058	12240	5263	0.43	1104
79	79	14520	4501	0.31	1049	13680	4241	0.31	1095	12840	3980	0.31	1141
81	64	11760	9761	0.83	902	10800	8964	0.83	957	9960	8267	0.83	994
81	68	12360	8776	0.71	938	11520	8179	0.71	984	10680	7583	0.71	1040
81	72	13080	7717	0.59	975	12240	7222	0.59	1030	11400	6726	0.59	1067
81	75	13800	6486	0.47	1012	12960	6091	0.47	1058	12240	5753	0.47	1104
81	79	14520	5082	0.35	1049	13680	4788	0.35	1095	12840	4494	0.35	1141
82	64	11760	10231	0.87	902	10800	9396	0.87	957	9960	8665	0.87	994
82	68	12360	9270	0.75	938	11520	8640	0.75	984	10680	8010	0.75	1040
82	72	13080	8240	0.63	975	12240	7711	0.63	1030	11400	7182	0.63	1067
82	75	13800	7038	0.51	1012	12960	6610	0.51	1058	12240	6242	0.51	1104
82	79	14520	5663	0.39	1049	13680	5335	0.39	1095	12840	5008	0.39	1141
84	64	11760	10702	0.91	902	10800	9828	0.91	957	9960	9064	0.91	994
84	68	12360	9764	0.79	938	11520	9101	0.79	984	10680	8437	0.79	1040
84	72	13080	8764	0.67	975	12240	8201	0.67	1030	11400	7638	0.67	1067
84	75	13800	7590	0.55	1012	12960	7128	0.55	1058	12240	6732	0.55	1104
84	79	14520	6244	0.43	1049	13680	5882	0.43	1095	12840	5521	0.43	1141
86	64	11760	11172	0.95	902	10800	10260	0.95	957	9960	9462	0.95	994
86	68	12360	10259	0.83	938	11520	9562	0.83	984	10680	8864	0.83	1040
86	72	13080	9287	0.71	975	12240	8690	0.71	1030	11400	8094	0.71	1067
86	75	13800	8142	0.59	1012	12960	7646	0.59	1058	12240	7222	0.59	1104
86	79	14520	6824	0.47	1049	13680	6430	0.47	1095	12840	6035	0.47	1141
88	64	11760	11642	0.99	902	10800	10692	0.99	957	9960	9860	0.99	994
88	68	12360	10753	0.87	938	11520	10022	0.87	984	10680	9292	0.87	1040
88	72	13080	9810	0.75	975	12240	9180	0.75	1030	11400	8550	0.75	1067
88	75	13800	8694	0.63	1012	12960	8165	0.63	1058	12240	7711	0.63	1104
88	79	14520	7405	0.51	1049	13680	6977	0.51	1095	12840	6548	0.51	1141
90	64	11760	11760	1.00	902	10800	10800	1.00	957	9960	9960	1.00	994
90	68	12360	11248	0.91	938	11520	10483	0.91	984	10680	9719	0.91	1040
90	72	13080	10333	0.79	975	12240	9670	0.79	1030	11400	9006	0.79	1067
90	75	13800	9246	0.67	1012	12960	8683	0.67	1058	12240	8201	0.67	1104
90	79	14520	7986	0.55	1049	13680	7524	0.55	1095	12840	7062	0.55	1141

NOTE CA: Capacity (Btu/h) SHF: Sensible heat factor DB: Dry-bulb temperature
SHC: Sensible heat capacity (Btu/h) P.C. : Power consumption (W) WB: Wet-bulb temperature

MUZ-GL15NA MUZ-GL15NAH MUY-GL15NA

CAPACITY (Btu/h): 14000 INPUT (W): 1080 SHF: 0.78

INDOOR DB (°F)	INDOOR WB (°F)	OUTDOOR DB (°F)															
		70				77				81				86			
		CA	SHC	SHF	P.C.	CA	SHC	SHF	P.C.	CA	SHC	SHF	P.C.	CA	SHC	SHF	P.C.
70	64	16450	9870	0.60	864	15750	9450	0.60	907	15120	9072	0.60	950	14560	8736	0.60	994
70	68	17150	8232	0.48	907	16450	7896	0.48	961	15960	7661	0.48	983	15400	7392	0.48	1026
72	64	16450	10528	0.64	864	15750	10080	0.64	907	15120	9677	0.64	950	14560	9318	0.64	994
72	68	17150	8918	0.52	907	16450	8554	0.52	961	15960	8299	0.52	983	15400	8008	0.52	1026
72	72	17850	7140	0.40	940	17220	6888	0.40	999	16800	6720	0.40	1026	16100	6440	0.40	1069
73	64	16450	11186	0.68	864	15750	10710	0.68	907	15120	10282	0.68	950	14560	9901	0.68	994
73	68	17150	9604	0.56	907	16450	9212	0.56	961	15960	8938	0.56	983	15400	8624	0.56	1026
73	72	17850	7854	0.44	940	17220	7577	0.44	999	16800	7392	0.44	1026	16100	7084	0.44	1069
75	64	16450	11844	0.72	864	15750	11340	0.72	907	15120	10886	0.72	950	14560	10483	0.72	994
75	68	17150	10290	0.60	907	16450	9870	0.60	961	15960	9576	0.60	983	15400	9240	0.60	1026
75	72	17850	8568	0.48	940	17220	8266	0.48	999	16800	8064	0.48	1026	16100	7728	0.48	1069
75	75	18760	6754	0.36	983	18060	6502	0.36	1037	17640	6350	0.36	1069	17080	6149	0.36	1123
77	64	16450	12502	0.76	864	15750	11970	0.76	907	15120	11491	0.76	950	14560	11066	0.76	994
77	68	17150	10976	0.64	907	16450	10528	0.64	961	15960	10214	0.64	983	15400	9856	0.64	1026
77	72	17850	9282	0.52	940	17220	8954	0.52	999	16800	8736	0.52	1026	16100	8372	0.52	1069
77	75	18760	7504	0.40	983	18060	7224	0.40	1037	17640	7056	0.40	1069	17080	6832	0.40	1123
79	64	16450	13160	0.80	864	15750	12600	0.80	907	15120	12096	0.80	950	14560	11648	0.80	994
79	68	17150	11662	0.68	907	16450	11186	0.68	961	15960	10853	0.68	983	15400	10472	0.68	1026
79	72	17850	9996	0.56	940	17220	9643	0.56	999	16800	9408	0.56	1026	16100	9016	0.56	1069
79	75	18760	8254	0.44	983	18060	7946	0.44	1037	17640	7762	0.44	1069	17080	7515	0.44	1123
79	79	19320	6182	0.32	1037	18760	6003	0.32	1091	18480	5914	0.32	1123	17920	5734	0.32	1156
81	64	16450	13818	0.84	864	15750	13230	0.84	907	15120	12701	0.84	950	14560	12230	0.84	994
81	68	17150	12348	0.72	907	16450	11844	0.72	961	15960	11491	0.72	983	15400	11088	0.72	1026
81	72	17850	10710	0.60	940	17220	10332	0.60	999	16800	10080	0.60	1026	16100	9660	0.60	1069
81	75	18760	9005	0.48	983	18060	8669	0.48	1037	17640	8467	0.48	1069	17080	8198	0.48	1123
81	79	19320	6955	0.36	1037	18760	6754	0.36	1091	18480	6653	0.36	1123	17920	6451	0.36	1156
82	64	16450	14476	0.88	864	15750	13860	0.88	907	15120	13306	0.88	950	14560	12813	0.88	994
82	68	17150	13034	0.76	907	16450	12502	0.76	961	15960	12130	0.76	983	15400	11704	0.76	1026
82	72	17850	11424	0.64	940	17220	11021	0.64	999	16800	10752	0.64	1026	16100	10304	0.64	1069
82	75	18760	9755	0.52	983	18060	9391	0.52	1037	17640	9173	0.52	1069	17080	8882	0.52	1123
82	79	19320	7728	0.40	1037	18760	7504	0.40	1091	18480	7392	0.40	1123	17920	7168	0.40	1156
84	64	16450	15134	0.92	864	15750	14490	0.92	907	15120	13910	0.92	950	14560	13395	0.92	994
84	68	17150	13720	0.80	907	16450	13160	0.80	961	15960	12768	0.80	983	15400	12320	0.80	1026
84	72	17850	12138	0.68	940	17220	11710	0.68	999	16800	11424	0.68	1026	16100	10948	0.68	1069
84	75	18760	10506	0.56	983	18060	10114	0.56	1037	17640	9878	0.56	1069	17080	9565	0.56	1123
84	79	19320	8501	0.44	1037	18760	8254	0.44	1091	18480	8131	0.44	1123	17920	7885	0.44	1156
86	64	16450	15792	0.96	864	15750	15120	0.96	907	15120	14515	0.96	950	14560	13978	0.96	994
86	68	17150	14406	0.84	907	16450	13818	0.84	961	15960	13406	0.84	983	15400	12936	0.84	1026
86	72	17850	12852	0.72	940	17220	12398	0.72	999	16800	12096	0.72	1026	16100	11592	0.72	1069
86	75	18760	11256	0.60	983	18060	10836	0.60	1037	17640	10584	0.60	1069	17080	10248	0.60	1123
86	79	19320	9274	0.48	1037	18760	9005	0.48	1091	18480	8870	0.48	1123	17920	8602	0.48	1156
88	64	16450	16450	1.00	864	15750	15750	1.00	907	15120	15120	1.00	950	14560	14560	1.00	994
88	68	17150	15092	0.88	907	16450	14476	0.88	961	15960	14045	0.88	983	15400	13552	0.88	1026
88	72	17850	13566	0.76	940	17220	13087	0.76	999	16800	12768	0.76	1026	16100	12236	0.76	1069
88	75	18760	12006	0.64	983	18060	11558	0.64	1037	17640	11290	0.64	1069	17080	10931	0.64	1123
88	79	19320	10046	0.52	1037	18760	9755	0.52	1091	18480	9610	0.52	1123	17920	9318	0.52	1156
90	64	16450	16450	1.00	864	15750	15750	1.00	907	15120	15120	1.00	950	14560	14560	1.00	994
90	68	17150	15778	0.92	907	16450	15134	0.92	961	15960	14683	0.92	983	15400	14168	0.92	1026
90	72	17850	14280	0.80	940	17220	13776	0.80	999	16800	13440	0.80	1026	16100	12880	0.80	1069
90	75	18760	12757	0.68	983	18060	12281	0.68	1037	17640	11995	0.68	1069	17080	11614	0.68	1123
90	79	19320	10819	0.56	1037	18760	10506	0.56	1091	18480	10349	0.56	1123	17920	10035	0.56	1156

NOTE CA: Capacity (Btu/h) SHF: Sensible heat factor DB: Dry-bulb temperature
SHC: Sensible heat capacity (Btu/h) P.C. : Power consumption (W) WB: Wet-bulb temperature

MUZ-GL15NA MUZ-GL15NAH MUY-GL15NA

CAPACITY (Btu/h): 14000 INPUT (W): 1080 SHF: 0.78

INDOOR DB (°F)	INDOOR WB (°F)	OUTDOOR DB (°F)											
		95				104				115			
		CA	SHC	SHF	P.C.	CA	SHC	SHF	P.C.	CA	SHC	SHF	P.C.
70	64	13720	8232	0.60	1058	12600	7560	0.60	1123	11620	6972	0.60	1166
70	68	14420	6922	0.48	1102	13440	6451	0.48	1156	12460	5981	0.48	1220
72	64	13720	8781	0.64	1058	12600	8064	0.64	1123	11620	7437	0.64	1166
72	68	14420	7498	0.52	1102	13440	6989	0.52	1156	12460	6479	0.52	1220
72	72	15260	6104	0.40	1145	14280	5712	0.40	1210	13300	5320	0.40	1253
73	64	13720	9330	0.68	1058	12600	8568	0.68	1123	11620	7902	0.68	1166
73	68	14420	8075	0.56	1102	13440	7526	0.56	1156	12460	6978	0.56	1220
73	72	15260	6714	0.44	1145	14280	6283	0.44	1210	13300	5852	0.44	1253
75	64	13720	9878	0.72	1058	12600	9072	0.72	1123	11620	8366	0.72	1166
75	68	14420	8652	0.60	1102	13440	8064	0.60	1156	12460	7476	0.60	1220
75	72	15260	7325	0.48	1145	14280	6854	0.48	1210	13300	6384	0.48	1253
75	75	16100	5796	0.36	1188	15120	5443	0.36	1242	14280	5141	0.36	1296
77	64	13720	10427	0.76	1058	12600	9576	0.76	1123	11620	8831	0.76	1166
77	68	14420	9229	0.64	1102	13440	8602	0.64	1156	12460	7974	0.64	1220
77	72	15260	7935	0.52	1145	14280	7426	0.52	1210	13300	6916	0.52	1253
77	75	16100	6440	0.40	1188	15120	6048	0.40	1242	14280	5712	0.40	1296
79	64	13720	10976	0.80	1058	12600	10080	0.80	1123	11620	9296	0.80	1166
79	68	14420	9806	0.68	1102	13440	9139	0.68	1156	12460	8473	0.68	1220
79	72	15260	8546	0.56	1145	14280	7997	0.56	1210	13300	7448	0.56	1253
79	75	16100	7084	0.44	1188	15120	6653	0.44	1242	14280	6283	0.44	1296
79	79	16940	5421	0.32	1231	15960	5107	0.32	1285	14980	4794	0.32	1339
81	64	13720	11525	0.84	1058	12600	10584	0.84	1123	11620	9761	0.84	1166
81	68	14420	10382	0.72	1102	13440	9677	0.72	1156	12460	8971	0.72	1220
81	72	15260	9156	0.60	1145	14280	8568	0.60	1210	13300	7980	0.60	1253
81	75	16100	7728	0.48	1188	15120	7258	0.48	1242	14280	6854	0.48	1296
81	79	16940	6098	0.36	1231	15960	5746	0.36	1285	14980	5393	0.36	1339
82	64	13720	12074	0.88	1058	12600	11088	0.88	1123	11620	10226	0.88	1166
82	68	14420	10959	0.76	1102	13440	10214	0.76	1156	12460	9470	0.76	1220
82	72	15260	9766	0.64	1145	14280	9139	0.64	1210	13300	8512	0.64	1253
82	75	16100	8372	0.52	1188	15120	7862	0.52	1242	14280	7426	0.52	1296
82	79	16940	6776	0.40	1231	15960	6384	0.40	1285	14980	5992	0.40	1339
84	64	13720	12622	0.92	1058	12600	11592	0.92	1123	11620	10690	0.92	1166
84	68	14420	11536	0.80	1102	13440	10752	0.80	1156	12460	9968	0.80	1220
84	72	15260	10377	0.68	1145	14280	9710	0.68	1210	13300	9044	0.68	1253
84	75	16100	9016	0.56	1188	15120	8467	0.56	1242	14280	7997	0.56	1296
84	79	16940	7454	0.44	1231	15960	7022	0.44	1285	14980	6591	0.44	1339
86	64	13720	13171	0.96	1058	12600	12096	0.96	1123	11620	11155	0.96	1166
86	68	14420	12113	0.84	1102	13440	11290	0.84	1156	12460	10466	0.84	1220
86	72	15260	10987	0.72	1145	14280	10282	0.72	1210	13300	9576	0.72	1253
86	75	16100	9660	0.60	1188	15120	9072	0.60	1242	14280	8568	0.60	1296
86	79	16940	8131	0.48	1231	15960	7661	0.48	1285	14980	7190	0.48	1339
88	64	13720	13720	1.00	1058	12600	12600	1.00	1123	11620	11620	1.00	1166
88	68	14420	12690	0.88	1102	13440	11827	0.88	1156	12460	10965	0.88	1220
88	72	15260	11598	0.76	1145	14280	10853	0.76	1210	13300	10108	0.76	1253
88	75	16100	10304	0.64	1188	15120	9677	0.64	1242	14280	9139	0.64	1296
88	79	16940	8809	0.52	1231	15960	8299	0.52	1285	14980	7790	0.52	1339
90	64	13720	13720	1.00	1058	12600	12600	1.00	1123	11620	11620	1.00	1166
90	68	14420	13266	0.92	1102	13440	12365	0.92	1156	12460	11463	0.92	1220
90	72	15260	12208	0.80	1145	14280	11424	0.80	1210	13300	10640	0.80	1253
90	75	16100	10948	0.68	1188	15120	10282	0.68	1242	14280	9710	0.68	1296
90	79	16940	9486	0.56	1231	15960	8938	0.56	1285	14980	8389	0.56	1339

NOTE CA: Capacity (Btu/h) SHF: Sensible heat factor DB: Dry-bulb temperature
SHC: Sensible heat capacity (Btu/h) P.C. : Power consumption (W) WB: Wet-bulb temperature

MUZ-GL18NA MUZ-GL18NAH MUY-GL18NA

CAPACITY (Btu/h): 18000 INPUT (W): 1340 SHF: 0.87

INDOOR DB (°F)	INDOOR WB (°F)	OUTDOOR DB (°F)															
		70				77				81				86			
		CA	SHC	SHF	P.C.	CA	SHC	SHF	P.C.	CA	SHC	SHF	P.C.	CA	SHC	SHF	P.C.
70	64	21150	14594	0.69	1072	20250	13973	0.69	1126	19440	13414	0.69	1179	18720	12917	0.69	1233
70	68	22050	12569	0.57	1126	21150	12056	0.57	1193	20520	11696	0.57	1219	19800	11286	0.57	1273
72	64	21150	15440	0.73	1072	20250	14783	0.73	1126	19440	14191	0.73	1179	18720	13666	0.73	1233
72	68	22050	13451	0.61	1126	21150	12902	0.61	1193	20520	12517	0.61	1219	19800	12078	0.61	1273
72	72	22950	11246	0.49	1166	22140	10849	0.49	1240	21600	10584	0.49	1273	20700	10143	0.49	1327
73	64	21150	16286	0.77	1072	20250	15593	0.77	1126	19440	14969	0.77	1179	18720	14414	0.77	1233
73	68	22050	14333	0.65	1126	21150	13748	0.65	1193	20520	13338	0.65	1219	19800	12870	0.65	1273
73	72	22950	12164	0.53	1166	22140	11734	0.53	1240	21600	11448	0.53	1273	20700	10971	0.53	1327
75	64	21150	17132	0.81	1072	20250	16403	0.81	1126	19440	15746	0.81	1179	18720	15163	0.81	1233
75	68	22050	15215	0.69	1126	21150	14594	0.69	1193	20520	14159	0.69	1219	19800	13662	0.69	1273
75	72	22950	13082	0.57	1166	22140	12620	0.57	1240	21600	12312	0.57	1273	20700	11799	0.57	1327
75	75	24120	10854	0.45	1219	23220	10449	0.45	1286	22680	10206	0.45	1327	21960	9882	0.45	1394
77	64	21150	17978	0.85	1072	20250	17213	0.85	1126	19440	16524	0.85	1179	18720	15912	0.85	1233
77	68	22050	16097	0.73	1126	21150	15440	0.73	1193	20520	14980	0.73	1219	19800	14454	0.73	1273
77	72	22950	14000	0.61	1166	22140	13505	0.61	1240	21600	13176	0.61	1273	20700	12627	0.61	1327
77	75	24120	11819	0.49	1219	23220	11378	0.49	1286	22680	11113	0.49	1327	21960	10760	0.49	1394
79	64	21150	18824	0.89	1072	20250	18023	0.89	1126	19440	17302	0.89	1179	18720	16661	0.89	1233
79	68	22050	16979	0.77	1126	21150	16286	0.77	1193	20520	15800	0.77	1219	19800	15246	0.77	1273
79	72	22950	14918	0.65	1166	22140	14391	0.65	1240	21600	14040	0.65	1273	20700	13455	0.65	1327
79	75	24120	12784	0.53	1219	23220	12307	0.53	1286	22680	12020	0.53	1327	21960	11639	0.53	1394
79	79	24840	10184	0.41	1286	24120	9889	0.41	1353	23760	9742	0.41	1394	23040	9446	0.41	1434
81	64	21150	19670	0.93	1072	20250	18833	0.93	1126	19440	18079	0.93	1179	18720	17410	0.93	1233
81	68	22050	17861	0.81	1126	21150	17132	0.81	1193	20520	16621	0.81	1219	19800	16038	0.81	1273
81	72	22950	15836	0.69	1166	22140	15277	0.69	1240	21600	14904	0.69	1273	20700	14283	0.69	1327
81	75	24120	13748	0.57	1219	23220	13235	0.57	1286	22680	12928	0.57	1327	21960	12517	0.57	1394
81	79	24840	11178	0.45	1286	24120	10854	0.45	1353	23760	10692	0.45	1394	23040	10368	0.45	1434
82	64	21150	20516	0.97	1072	20250	19643	0.97	1126	19440	18857	0.97	1179	18720	18158	0.97	1233
82	68	22050	18743	0.85	1126	21150	17978	0.85	1193	20520	17442	0.85	1219	19800	16830	0.85	1273
82	72	22950	16754	0.73	1166	22140	16162	0.73	1240	21600	15768	0.73	1273	20700	15111	0.73	1327
82	75	24120	14713	0.61	1219	23220	14164	0.61	1286	22680	13835	0.61	1327	21960	13396	0.61	1394
82	79	24840	12172	0.49	1286	24120	11819	0.49	1353	23760	11642	0.49	1394	23040	11290	0.49	1434
84	64	21150	21150	1.00	1072	20250	20250	1.00	1126	19440	19440	1.00	1179	18720	18720	1.00	1233
84	68	22050	19625	0.89	1126	21150	18824	0.89	1193	20520	18263	0.89	1219	19800	17622	0.89	1273
84	72	22950	17672	0.77	1166	22140	17048	0.77	1240	21600	16632	0.77	1273	20700	15939	0.77	1327
84	75	24120	15678	0.65	1219	23220	15093	0.65	1286	22680	14742	0.65	1327	21960	14274	0.65	1394
84	79	24840	13165	0.53	1286	24120	12784	0.53	1353	23760	12593	0.53	1394	23040	12211	0.53	1434
86	64	21150	21150	1.00	1072	20250	20250	1.00	1126	19440	19440	1.00	1179	18720	18720	1.00	1233
86	68	22050	20507	0.93	1126	21150	19670	0.93	1193	20520	19084	0.93	1219	19800	18414	0.93	1273
86	72	22950	18590	0.81	1166	22140	17933	0.81	1240	21600	17496	0.81	1273	20700	16767	0.81	1327
86	75	24120	16643	0.69	1219	23220	16022	0.69	1286	22680	15649	0.69	1327	21960	15152	0.69	1394
86	79	24840	14159	0.57	1286	24120	13748	0.57	1353	23760	13543	0.57	1394	23040	13133	0.57	1434
88	64	21150	21150	1.00	1072	20250	20250	1.00	1126	19440	19440	1.00	1179	18720	18720	1.00	1233
88	68	22050	21389	0.97	1126	21150	20516	0.97	1193	20520	19904	0.97	1219	19800	19206	0.97	1273
88	72	22950	19508	0.85	1166	22140	18819	0.85	1240	21600	18360	0.85	1273	20700	17595	0.85	1327
88	75	24120	17608	0.73	1219	23220	16951	0.73	1286	22680	16556	0.73	1327	21960	16031	0.73	1394
88	79	24840	15152	0.61	1286	24120	14713	0.61	1353	23760	14494	0.61	1394	23040	14054	0.61	1434
90	64	21150	21150	1.00	1072	20250	20250	1.00	1126	19440	19440	1.00	1179	18720	18720	1.00	1233
90	68	22050	22050	1.00	1126	21150	21150	1.00	1193	20520	20520	1.00	1219	19800	19800	1.00	1273
90	72	22950	20426	0.89	1166	22140	19705	0.89	1240	21600	19224	0.89	1273	20700	18423	0.89	1327
90	75	24120	18572	0.77	1219	23220	17879	0.77	1286	22680	17464	0.77	1327	21960	16909	0.77	1394
90	79	24840	16146	0.65	1286	24120	15678	0.65	1353	23760	15444	0.65	1394	23040	14976	0.65	1434

NOTE CA: Capacity (Btu/h) SHF: Sensible heat factor DB: Dry-bulb temperature
SHC: Sensible heat capacity (Btu/h) P.C. : Power consumption (W) WB: Wet-bulb temperature

MUZ-GL18NA MUZ-GL18NAH MUY-GL18NA

CAPACITY (Btu/h): 18000 INPUT (W): 1340 SHF: 0.87

INDOOR DB (°F)	INDOOR WB (°F)	OUTDOOR DB (°F)											
		95				104				115			
		CA	SHC	SHF	P.C.	CA	SHC	SHF	P.C.	CA	SHC	SHF	P.C.
70	64	17640	12172	0.69	1313	16200	11178	0.69	1394	14940	10309	0.69	1447
70	68	18540	10568	0.57	1367	17280	9850	0.57	1434	16020	9131	0.57	1514
72	64	17640	12877	0.73	1313	16200	11826	0.73	1394	14940	10906	0.73	1447
72	68	18540	11309	0.61	1367	17280	10541	0.61	1434	16020	9772	0.61	1514
72	72	19620	9614	0.49	1420	18360	8996	0.49	1501	17100	8379	0.49	1554
73	64	17640	13583	0.77	1313	16200	12474	0.77	1394	14940	11504	0.77	1447
73	68	18540	12051	0.65	1367	17280	11232	0.65	1434	16020	10413	0.65	1514
73	72	19620	10399	0.53	1420	18360	9731	0.53	1501	17100	9063	0.53	1554
75	64	17640	14288	0.81	1313	16200	13122	0.81	1394	14940	12101	0.81	1447
75	68	18540	12793	0.69	1367	17280	11923	0.69	1434	16020	11054	0.69	1514
75	72	19620	11183	0.57	1420	18360	10465	0.57	1501	17100	9747	0.57	1554
75	75	20700	9315	0.45	1474	19440	8748	0.45	1541	18360	8262	0.45	1608
77	64	17640	14994	0.85	1313	16200	13770	0.85	1394	14940	12699	0.85	1447
77	68	18540	13534	0.73	1367	17280	12614	0.73	1434	16020	11695	0.73	1514
77	72	19620	11968	0.61	1420	18360	11200	0.61	1501	17100	10431	0.61	1554
77	75	20700	10143	0.49	1474	19440	9526	0.49	1541	18360	8996	0.49	1608
79	64	17640	15700	0.89	1313	16200	14418	0.89	1394	14940	13297	0.89	1447
79	68	18540	14276	0.77	1367	17280	13306	0.77	1434	16020	12335	0.77	1514
79	72	19620	12753	0.65	1420	18360	11934	0.65	1501	17100	11115	0.65	1554
79	75	20700	10971	0.53	1474	19440	10303	0.53	1541	18360	9731	0.53	1608
79	79	21780	8930	0.41	1528	20520	8413	0.41	1595	19260	7897	0.41	1662
81	64	17640	16405	0.93	1313	16200	15066	0.93	1394	14940	13894	0.93	1447
81	68	18540	15017	0.81	1367	17280	13997	0.81	1434	16020	12976	0.81	1514
81	72	19620	13538	0.69	1420	18360	12668	0.69	1501	17100	11799	0.69	1554
81	75	20700	11799	0.57	1474	19440	11081	0.57	1541	18360	10465	0.57	1608
81	79	21780	9801	0.45	1528	20520	9234	0.45	1595	19260	8667	0.45	1662
82	64	17640	17111	0.97	1313	16200	15714	0.97	1394	14940	14492	0.97	1447
82	68	18540	15759	0.85	1367	17280	14688	0.85	1434	16020	13617	0.85	1514
82	72	19620	14323	0.73	1420	18360	13403	0.73	1501	17100	12483	0.73	1554
82	75	20700	12627	0.61	1474	19440	11858	0.61	1541	18360	11200	0.61	1608
82	79	21780	10672	0.49	1528	20520	10055	0.49	1595	19260	9437	0.49	1662
84	64	17640	17640	1.00	1313	16200	16200	1.00	1394	14940	14940	1.00	1447
84	68	18540	16501	0.89	1367	17280	15379	0.89	1434	16020	14258	0.89	1514
84	72	19620	15107	0.77	1420	18360	14137	0.77	1501	17100	13167	0.77	1554
84	75	20700	13455	0.65	1474	19440	12636	0.65	1541	18360	11934	0.65	1608
84	79	21780	11543	0.53	1528	20520	10876	0.53	1595	19260	10208	0.53	1662
86	64	17640	17640	1.00	1313	16200	16200	1.00	1394	14940	14940	1.00	1447
86	68	18540	17242	0.93	1367	17280	16070	0.93	1434	16020	14899	0.93	1514
86	72	19620	15892	0.81	1420	18360	14872	0.81	1501	17100	13851	0.81	1554
86	75	20700	14283	0.69	1474	19440	13414	0.69	1541	18360	12668	0.69	1608
86	79	21780	12415	0.57	1528	20520	11696	0.57	1595	19260	10978	0.57	1662
88	64	17640	17640	1.00	1313	16200	16200	1.00	1394	14940	14940	1.00	1447
88	68	18540	17984	0.97	1367	17280	16762	0.97	1434	16020	15539	0.97	1514
88	72	19620	16677	0.85	1420	18360	15606	0.85	1501	17100	14535	0.85	1554
88	75	20700	15111	0.73	1474	19440	14191	0.73	1541	18360	13403	0.73	1608
88	79	21780	13286	0.61	1528	20520	12517	0.61	1595	19260	11749	0.61	1662
90	64	17640	17640	1.00	1313	16200	16200	1.00	1394	14940	14940	1.00	1447
90	68	18540	18540	1.00	1367	17280	17280	1.00	1434	16020	16020	1.00	1514
90	72	19620	17462	0.89	1420	18360	16340	0.89	1501	17100	15219	0.89	1554
90	75	20700	15939	0.77	1474	19440	14969	0.77	1541	18360	14137	0.77	1608
90	79	21780	14157	0.65	1528	20520	13338	0.65	1595	19260	12519	0.65	1662

NOTE CA: Capacity (Btu/h) SHF: Sensible heat factor DB: Dry-bulb temperature
SHC: Sensible heat capacity (Btu/h) P.C. : Power consumption (W) WB: Wet-bulb temperature

MUZ-GL24NA MUZ-GL24NAH MUY-GL24NA

CAPACITY (Btu/h): 22500 INPUT (W): 1800 SHF: 0.75

INDOOR DB (°F)	INDOOR WB (°F)	OUTDOOR DB (°F)															
		70				77				81				86			
		CA	SHC	SHF	P.C.	CA	SHC	SHF	P.C.	CA	SHC	SHF	P.C.	CA	SHC	SHF	P.C.
70	64	26438	15069	0.57	1440	25313	14428	0.57	1512	24300	13851	0.57	1584	23400	13338	0.57	1656
70	68	27563	12403	0.45	1512	26438	11897	0.45	1602	25650	11543	0.45	1638	24750	11138	0.45	1710
72	64	26438	16127	0.61	1440	25313	15441	0.61	1512	24300	14823	0.61	1584	23400	14274	0.61	1656
72	68	27563	13506	0.49	1512	26438	12954	0.49	1602	25650	12569	0.49	1638	24750	12128	0.49	1710
72	72	28688	10614	0.37	1566	27675	10240	0.37	1665	27000	9990	0.37	1710	25875	9574	0.37	1782
73	64	26438	17184	0.65	1440	25313	16453	0.65	1512	24300	15795	0.65	1584	23400	15210	0.65	1656
73	68	27563	14608	0.53	1512	26438	14012	0.53	1602	25650	13595	0.53	1638	24750	13118	0.53	1710
73	72	28688	11762	0.41	1566	27675	11347	0.41	1665	27000	11070	0.41	1710	25875	10609	0.41	1782
75	64	26438	18242	0.69	1440	25313	17466	0.69	1512	24300	16767	0.69	1584	23400	16146	0.69	1656
75	68	27563	15711	0.57	1512	26438	15069	0.57	1602	25650	14621	0.57	1638	24750	14108	0.57	1710
75	72	28688	12909	0.45	1566	27675	12454	0.45	1665	27000	12150	0.45	1710	25875	11644	0.45	1782
75	75	30150	9950	0.33	1638	29025	9578	0.33	1728	28350	9356	0.33	1782	27450	9059	0.33	1872
77	64	26438	19299	0.73	1440	25313	18478	0.73	1512	24300	17739	0.73	1584	23400	17082	0.73	1656
77	68	27563	16813	0.61	1512	26438	16127	0.61	1602	25650	15647	0.61	1638	24750	15098	0.61	1710
77	72	28688	14057	0.49	1566	27675	13561	0.49	1665	27000	13230	0.49	1710	25875	12679	0.49	1782
77	75	30150	11156	0.37	1638	29025	10739	0.37	1728	28350	10490	0.37	1782	27450	10157	0.37	1872
79	64	26438	20357	0.77	1440	25313	19491	0.77	1512	24300	18711	0.77	1584	23400	18018	0.77	1656
79	68	27563	17916	0.65	1512	26438	17184	0.65	1602	25650	16673	0.65	1638	24750	16088	0.65	1710
79	72	28688	15204	0.53	1566	27675	14668	0.53	1665	27000	14310	0.53	1710	25875	13714	0.53	1782
79	75	30150	12362	0.41	1638	29025	11900	0.41	1728	28350	11624	0.41	1782	27450	11255	0.41	1872
79	79	31050	9005	0.29	1728	30150	8744	0.29	1818	29700	8613	0.29	1872	28800	8352	0.29	1926
81	64	26438	21414	0.81	1440	25313	20503	0.81	1512	24300	19683	0.81	1584	23400	18954	0.81	1656
81	68	27563	19018	0.69	1512	26438	18242	0.69	1602	25650	17699	0.69	1638	24750	17078	0.69	1710
81	72	28688	16352	0.57	1566	27675	15775	0.57	1665	27000	15390	0.57	1710	25875	14749	0.57	1782
81	75	30150	13568	0.45	1638	29025	13061	0.45	1728	28350	12758	0.45	1782	27450	12353	0.45	1872
81	79	31050	10247	0.33	1728	30150	9950	0.33	1818	29700	9801	0.33	1872	28800	9504	0.33	1926
82	64	26438	22472	0.85	1440	25313	21516	0.85	1512	24300	20655	0.85	1584	23400	19890	0.85	1656
82	68	27563	20121	0.73	1512	26438	19299	0.73	1602	25650	18725	0.73	1638	24750	18068	0.73	1710
82	72	28688	17499	0.61	1566	27675	16882	0.61	1665	27000	16470	0.61	1710	25875	15784	0.61	1782
82	75	30150	14774	0.49	1638	29025	14222	0.49	1728	28350	13892	0.49	1782	27450	13451	0.49	1872
82	79	31050	11489	0.37	1728	30150	11156	0.37	1818	29700	10989	0.37	1872	28800	10656	0.37	1926
84	64	26438	23529	0.89	1440	25313	22528	0.89	1512	24300	21627	0.89	1584	23400	20826	0.89	1656
84	68	27563	21223	0.77	1512	26438	20357	0.77	1602	25650	19751	0.77	1638	24750	19058	0.77	1710
84	72	28688	18647	0.65	1566	27675	17989	0.65	1665	27000	17550	0.65	1710	25875	16819	0.65	1782
84	75	30150	15980	0.53	1638	29025	15383	0.53	1728	28350	15026	0.53	1782	27450	14549	0.53	1872
84	79	31050	12731	0.41	1728	30150	12362	0.41	1818	29700	12177	0.41	1872	28800	11808	0.41	1926
86	64	26438	24587	0.93	1440	25313	23541	0.93	1512	24300	22599	0.93	1584	23400	21762	0.93	1656
86	68	27563	22326	0.81	1512	26438	21414	0.81	1602	25650	20777	0.81	1638	24750	20048	0.81	1710
86	72	28688	19794	0.69	1566	27675	19096	0.69	1665	27000	18630	0.69	1710	25875	17854	0.69	1782
86	75	30150	17186	0.57	1638	29025	16544	0.57	1728	28350	16160	0.57	1782	27450	15647	0.57	1872
86	79	31050	13973	0.45	1728	30150	13568	0.45	1818	29700	13365	0.45	1872	28800	12960	0.45	1926
88	64	26438	25644	0.97	1440	25313	24553	0.97	1512	24300	23571	0.97	1584	23400	22698	0.97	1656
88	68	27563	23428	0.85	1512	26438	22472	0.85	1602	25650	21803	0.85	1638	24750	21038	0.85	1710
88	72	28688	20942	0.73	1566	27675	20203	0.73	1665	27000	19710	0.73	1710	25875	18889	0.73	1782
88	75	30150	18392	0.61	1638	29025	17705	0.61	1728	28350	17294	0.61	1782	27450	16745	0.61	1872
88	79	31050	15215	0.49	1728	30150	14774	0.49	1818	29700	14553	0.49	1872	28800	14112	0.49	1926
90	64	26438	26438	1.00	1440	25313	25313	1.00	1512	24300	24300	1.00	1584	23400	23400	1.00	1656
90	68	27563	24531	0.89	1512	26438	23529	0.89	1602	25650	22829	0.89	1638	24750	22028	0.89	1710
90	72	28688	22089	0.77	1566	27675	21310	0.77	1665	27000	20790	0.77	1710	25875	19924	0.77	1782
90	75	30150	19598	0.65	1638	29025	18866	0.65	1728	28350	18428	0.65	1782	27450	17843	0.65	1872
90	79	31050	16457	0.53	1728	30150	15980	0.53	1818	29700	15741	0.53	1872	28800	15264	0.53	1926

NOTE CA: Capacity (Btu/h) SHF: Sensible heat factor DB: Dry-bulb temperature
SHC: Sensible heat capacity (Btu/h) P.C. : Power consumption (W) WB: Wet-bulb temperature

MUZ-GL24NA MUZ-GL24NAH MUY-GL24NA

CAPACITY (Btu/h): 22500 INPUT (W): 1800 SHF: 0.75

INDOOR DB (°F)	INDOOR WB (°F)	OUTDOOR DB (°F)											
		95				104				115			
		CA	SHC	SHF	P.C.	CA	SHC	SHF	P.C.	CA	SHC	SHF	P.C.
70	64	22050	12569	0.57	1764	20250	11543	0.57	1872	18675	10645	0.57	1944
70	68	23175	10429	0.45	1836	21600	9720	0.45	1926	20025	9011	0.45	2034
72	64	22050	13451	0.61	1764	20250	12353	0.61	1872	18675	11392	0.61	1944
72	68	23175	11356	0.49	1836	21600	10584	0.49	1926	20025	9812	0.49	2034
72	72	24525	9074	0.37	1908	22950	8492	0.37	2016	21375	7909	0.37	2088
73	64	22050	14333	0.65	1764	20250	13163	0.65	1872	18675	12139	0.65	1944
73	68	23175	12283	0.53	1836	21600	11448	0.53	1926	20025	10613	0.53	2034
73	72	24525	10055	0.41	1908	22950	9410	0.41	2016	21375	8764	0.41	2088
75	64	22050	15215	0.69	1764	20250	13973	0.69	1872	18675	12886	0.69	1944
75	68	23175	13210	0.57	1836	21600	12312	0.57	1926	20025	11414	0.57	2034
75	72	24525	11036	0.45	1908	22950	10328	0.45	2016	21375	9619	0.45	2088
75	75	25875	8539	0.33	1980	24300	8019	0.33	2070	22950	7574	0.33	2160
77	64	22050	16097	0.73	1764	20250	14783	0.73	1872	18675	13633	0.73	1944
77	68	23175	14137	0.61	1836	21600	13176	0.61	1926	20025	12215	0.61	2034
77	72	24525	12017	0.49	1908	22950	11246	0.49	2016	21375	10474	0.49	2088
77	75	25875	9574	0.37	1980	24300	8991	0.37	2070	22950	8492	0.37	2160
79	64	22050	16979	0.77	1764	20250	15593	0.77	1872	18675	14380	0.77	1944
79	68	23175	15064	0.65	1836	21600	14040	0.65	1926	20025	13016	0.65	2034
79	72	24525	12998	0.53	1908	22950	12164	0.53	2016	21375	11329	0.53	2088
79	75	25875	10609	0.41	1980	24300	9963	0.41	2070	22950	9410	0.41	2160
79	79	27225	7895	0.29	2052	25650	7439	0.29	2142	24075	6982	0.29	2232
81	64	22050	17861	0.81	1764	20250	16403	0.81	1872	18675	15127	0.81	1944
81	68	23175	15991	0.69	1836	21600	14904	0.69	1926	20025	13817	0.69	2034
81	72	24525	13979	0.57	1908	22950	13082	0.57	2016	21375	12184	0.57	2088
81	75	25875	11644	0.45	1980	24300	10935	0.45	2070	22950	10328	0.45	2160
81	79	27225	8984	0.33	2052	25650	8465	0.33	2142	24075	7945	0.33	2232
82	64	22050	18743	0.85	1764	20250	17213	0.85	1872	18675	15874	0.85	1944
82	68	23175	16918	0.73	1836	21600	15768	0.73	1926	20025	14618	0.73	2034
82	72	24525	14960	0.61	1908	22950	14000	0.61	2016	21375	13039	0.61	2088
82	75	25875	12679	0.49	1980	24300	11907	0.49	2070	22950	11246	0.49	2160
82	79	27225	10073	0.37	2052	25650	9491	0.37	2142	24075	8908	0.37	2232
84	64	22050	19625	0.89	1764	20250	18023	0.89	1872	18675	16621	0.89	1944
84	68	23175	17845	0.77	1836	21600	16632	0.77	1926	20025	15419	0.77	2034
84	72	24525	15941	0.65	1908	22950	14918	0.65	2016	21375	13894	0.65	2088
84	75	25875	13714	0.53	1980	24300	12879	0.53	2070	22950	12164	0.53	2160
84	79	27225	11162	0.41	2052	25650	10517	0.41	2142	24075	9871	0.41	2232
86	64	22050	20507	0.93	1764	20250	18833	0.93	1872	18675	17368	0.93	1944
86	68	23175	18772	0.81	1836	21600	17496	0.81	1926	20025	16220	0.81	2034
86	72	24525	16922	0.69	1908	22950	15836	0.69	2016	21375	14749	0.69	2088
86	75	25875	14749	0.57	1980	24300	13851	0.57	2070	22950	13082	0.57	2160
86	79	27225	12251	0.45	2052	25650	11543	0.45	2142	24075	10834	0.45	2232
88	64	22050	21389	0.97	1764	20250	19643	0.97	1872	18675	18115	0.97	1944
88	68	23175	19699	0.85	1836	21600	18360	0.85	1926	20025	17021	0.85	2034
88	72	24525	17903	0.73	1908	22950	16754	0.73	2016	21375	15604	0.73	2088
88	75	25875	15784	0.61	1980	24300	14823	0.61	2070	22950	14000	0.61	2160
88	79	27225	13340	0.49	2052	25650	12569	0.49	2142	24075	11797	0.49	2232
90	64	22050	22050	1.00	1764	20250	20250	1.00	1872	18675	18675	1.00	1944
90	68	23175	20626	0.89	1836	21600	19224	0.89	1926	20025	17822	0.89	2034
90	72	24525	18884	0.77	1908	22950	17672	0.77	2016	21375	16459	0.77	2088
90	75	25875	16819	0.65	1980	24300	15795	0.65	2070	22950	14918	0.65	2160
90	79	27225	14429	0.53	2052	25650	13595	0.53	2142	24075	12760	0.53	2232

NOTE CA: Capacity (Btu/h) SHF: Sensible heat factor DB: Dry-bulb temperature
SHC: Sensible heat capacity (Btu/h) P.C. : Power consumption (W) WB: Wet-bulb temperature

MUZ-HM09NA

CAPACITY (Btu/h): 9000 INPUT (W): 750 SHF: 0.82

INDOOR DB (°F)	INDOOR WB (°F)	OUTDOOR DB (°F)															
		70				77				81				86			
		CA	SHC	SHF	P.C.	CA	SHC	SHF	P.C.	CA	SHC	SHF	P.C.	CA	SHC	SHF	P.C.
70	64	10575	6768	0.64	600	10125	6480	0.64	630	9720	6221	0.64	660	9360	5990	0.64	690
70	68	11025	5733	0.52	630	10575	5499	0.52	668	10260	5335	0.52	683	9900	5148	0.52	713
72	64	10575	7191	0.68	600	10125	6885	0.68	630	9720	6610	0.68	660	9360	6365	0.68	690
72	68	11025	6174	0.56	630	10575	5922	0.56	668	10260	5746	0.56	683	9900	5544	0.56	713
72	72	11475	5049	0.44	653	11070	4871	0.44	694	10800	4752	0.44	713	10350	4554	0.44	743
73	64	10575	7614	0.72	600	10125	7290	0.72	630	9720	6998	0.72	660	9360	6739	0.72	690
73	68	11025	6615	0.60	630	10575	6345	0.60	668	10260	6156	0.60	683	9900	5940	0.60	713
73	72	11475	5508	0.48	653	11070	5314	0.48	694	10800	5184	0.48	713	10350	4968	0.48	743
75	64	10575	8037	0.76	600	10125	7695	0.76	630	9720	7387	0.76	660	9360	7114	0.76	690
75	68	11025	7056	0.64	630	10575	6768	0.64	668	10260	6566	0.64	683	9900	6336	0.64	713
75	72	11475	5967	0.52	653	11070	5756	0.52	694	10800	5616	0.52	713	10350	5382	0.52	743
75	75	12060	4824	0.40	683	11610	4644	0.40	720	11340	4536	0.40	743	10980	4392	0.40	780
77	64	10575	8460	0.80	600	10125	8100	0.80	630	9720	7776	0.80	660	9360	7488	0.80	690
77	68	11025	7497	0.68	630	10575	7191	0.68	668	10260	6977	0.68	683	9900	6732	0.68	713
77	72	11475	6426	0.56	653	11070	6199	0.56	694	10800	6048	0.56	713	10350	5796	0.56	743
77	75	12060	5306	0.44	683	11610	5108	0.44	720	11340	4990	0.44	743	10980	4831	0.44	780
79	64	10575	8883	0.84	600	10125	8505	0.84	630	9720	8165	0.84	660	9360	7862	0.84	690
79	68	11025	7938	0.72	630	10575	7614	0.72	668	10260	7387	0.72	683	9900	7128	0.72	713
79	72	11475	6885	0.60	653	11070	6642	0.60	694	10800	6480	0.60	713	10350	6210	0.60	743
79	75	12060	5789	0.48	683	11610	5573	0.48	720	11340	5443	0.48	743	10980	5270	0.48	780
79	79	12420	4471	0.36	720	12060	4342	0.36	758	11880	4277	0.36	780	11520	4147	0.36	803
81	64	10575	9306	0.88	600	10125	8910	0.88	630	9720	8554	0.88	660	9360	8237	0.88	690
81	68	11025	8379	0.76	630	10575	8037	0.76	668	10260	7798	0.76	683	9900	7524	0.76	713
81	72	11475	7344	0.64	653	11070	7085	0.64	694	10800	6912	0.64	713	10350	6624	0.64	743
81	75	12060	6271	0.52	683	11610	6037	0.52	720	11340	5897	0.52	743	10980	5710	0.52	780
81	79	12420	4968	0.40	720	12060	4824	0.40	758	11880	4752	0.40	780	11520	4608	0.40	803
82	64	10575	9729	0.92	600	10125	9315	0.92	630	9720	8942	0.92	660	9360	8611	0.92	690
82	68	11025	8820	0.80	630	10575	8460	0.80	668	10260	8208	0.80	683	9900	7920	0.80	713
82	72	11475	7803	0.68	653	11070	7528	0.68	694	10800	7344	0.68	713	10350	7038	0.68	743
82	75	12060	6754	0.56	683	11610	6502	0.56	720	11340	6350	0.56	743	10980	6149	0.56	780
82	79	12420	5465	0.44	720	12060	5306	0.44	758	11880	5227	0.44	780	11520	5069	0.44	803
84	64	10575	10152	0.96	600	10125	9720	0.96	630	9720	9331	0.96	660	9360	8986	0.96	690
84	68	11025	9261	0.84	630	10575	8883	0.84	668	10260	8618	0.84	683	9900	8316	0.84	713
84	72	11475	8262	0.72	653	11070	7970	0.72	694	10800	7776	0.72	713	10350	7452	0.72	743
84	75	12060	7236	0.60	683	11610	6966	0.60	720	11340	6804	0.60	743	10980	6588	0.60	780
84	79	12420	5962	0.48	720	12060	5789	0.48	758	11880	5702	0.48	780	11520	5530	0.48	803
86	64	10575	10575	1.00	600	10125	10125	1.00	630	9720	9720	1.00	660	9360	9360	1.00	690
86	68	11025	9702	0.88	630	10575	9306	0.88	668	10260	9029	0.88	683	9900	8712	0.88	713
86	72	11475	8721	0.76	653	11070	8413	0.76	694	10800	8208	0.76	713	10350	7866	0.76	743
86	75	12060	7718	0.64	683	11610	7430	0.64	720	11340	7258	0.64	743	10980	7027	0.64	780
86	79	12420	6458	0.52	720	12060	6271	0.52	758	11880	6178	0.52	780	11520	5990	0.52	803
88	64	10575	10575	1.00	600	10125	10125	1.00	630	9720	9720	1.00	660	9360	9360	1.00	690
88	68	11025	10143	0.92	630	10575	9729	0.92	668	10260	9439	0.92	683	9900	9108	0.92	713
88	72	11475	9180	0.80	653	11070	8856	0.80	694	10800	8640	0.80	713	10350	8280	0.80	743
88	75	12060	8201	0.68	683	11610	7895	0.68	720	11340	7711	0.68	743	10980	7466	0.68	780
88	79	12420	6955	0.56	720	12060	6754	0.56	758	11880	6653	0.56	780	11520	6451	0.56	803
90	64	10575	10575	1.00	600	10125	10125	1.00	630	9720	9720	1.00	660	9360	9360	1.00	690
90	68	11025	10584	0.96	630	10575	10152	0.96	668	10260	9850	0.96	683	9900	9504	0.96	713
90	72	11475	9639	0.84	653	11070	9299	0.84	694	10800	9072	0.84	713	10350	8694	0.84	743
90	75	12060	8683	0.72	683	11610	8359	0.72	720	11340	8165	0.72	743	10980	7906	0.72	780
90	79	12420	7452	0.60	720	12060	7236	0.60	758	11880	7128	0.60	780	11520	6912	0.60	803

NOTE CA: Capacity (Btu/h) SHF: Sensible heat factor DB: Dry-bulb temperature
SHC: Sensible heat capacity (Btu/h) P.C. : Power consumption (W) WB: Wet-bulb temperature

MUZ-HM09NA

CAPACITY (Btu/h): 9000 INPUT (W): 750 SHF: 0.82

INDOOR DB (°F)	INDOOR WB (°F)	OUTDOOR DB (°F)											
		95				104				115			
		CA	SHC	SHF	P.C.	CA	SHC	SHF	P.C.	CA	SHC	SHF	P.C.
70	64	8820	5645	0.64	735	8100	5184	0.64	780	7470	4781	0.64	810
70	68	9270	4820	0.52	765	8640	4493	0.52	803	8010	4165	0.52	848
72	64	8820	5998	0.68	735	8100	5508	0.68	780	7470	5080	0.68	810
72	68	9270	5191	0.56	765	8640	4838	0.56	803	8010	4486	0.56	848
72	72	9810	4316	0.44	795	9180	4039	0.44	840	8550	3762	0.44	870
73	64	8820	6350	0.72	735	8100	5832	0.72	780	7470	5378	0.72	810
73	68	9270	5562	0.60	765	8640	5184	0.60	803	8010	4806	0.60	848
73	72	9810	4709	0.48	795	9180	4406	0.48	840	8550	4104	0.48	870
75	64	8820	6703	0.76	735	8100	6156	0.76	780	7470	5677	0.76	810
75	68	9270	5933	0.64	765	8640	5530	0.64	803	8010	5126	0.64	848
75	72	9810	5101	0.52	795	9180	4774	0.52	840	8550	4446	0.52	870
75	75	10350	4140	0.40	825	9720	3888	0.40	863	9180	3672	0.40	900
77	64	8820	7056	0.80	735	8100	6480	0.80	780	7470	5976	0.8	810
77	68	9270	6304	0.68	765	8640	5875	0.68	803	8010	5447	0.68	848
77	72	9810	5494	0.56	795	9180	5141	0.56	840	8550	4788	0.56	870
77	75	10350	4554	0.44	825	9720	4277	0.44	863	9180	4039	0.44	900
79	64	8820	7409	0.84	735	8100	6804	0.84	780	7470	6275	0.84	810
79	68	9270	6674	0.72	765	8640	6221	0.72	803	8010	5767	0.72	848
79	72	9810	5886	0.60	795	9180	5508	0.60	840	8550	5130	0.60	870
79	75	10350	4968	0.48	825	9720	4666	0.48	863	9180	4406	0.48	900
79	79	10890	3920	0.36	855	10260	3694	0.36	893	9630	3467	0.36	930
81	64	8820	7762	0.88	735	8100	7128	0.88	780	7470	6574	0.88	810
81	68	9270	7045	0.76	765	8640	6566	0.76	803	8010	6088	0.76	848
81	72	9810	6278	0.64	795	9180	5875	0.64	840	8550	5472	0.64	870
81	75	10350	5382	0.52	825	9720	5054	0.52	863	9180	4774	0.52	900
81	79	10890	4356	0.40	855	10260	4104	0.40	893	9630	3852	0.40	930
82	64	8820	8114	0.92	735	8100	7452	0.92	780	7470	6872	0.92	810
82	68	9270	7416	0.80	765	8640	6912	0.80	803	8010	6408	0.80	848
82	72	9810	6671	0.68	795	9180	6242	0.68	840	8550	5814	0.68	870
82	75	10350	5796	0.56	825	9720	5443	0.56	863	9180	5141	0.56	900
82	79	10890	4792	0.44	855	10260	4514	0.44	893	9630	4237	0.44	930
84	64	8820	8467	0.96	735	8100	7776	0.96	780	7470	7171	0.96	810
84	68	9270	7787	0.84	765	8640	7258	0.84	803	8010	6728	0.84	848
84	72	9810	7063	0.72	795	9180	6610	0.72	840	8550	6156	0.72	870
84	75	10350	6210	0.60	825	9720	5832	0.60	863	9180	5508	0.60	900
84	79	10890	5227	0.48	855	10260	4925	0.48	893	9630	4622	0.48	930
86	64	8820	8820	1.00	735	8100	8100	1.00	780	7470	7470	1.00	810
86	68	9270	8158	0.88	765	8640	7603	0.88	803	8010	7049	0.88	848
86	72	9810	7456	0.76	795	9180	6977	0.76	840	8550	6498	0.76	870
86	75	10350	6624	0.64	825	9720	6221	0.64	863	9180	5875	0.64	900
86	79	10890	5663	0.52	855	10260	5335	0.52	893	9630	5008	0.52	930
88	64	8820	8820	1.00	735	8100	8100	1.00	780	7470	7470	1.00	810
88	68	9270	8528	0.92	765	8640	7949	0.92	803	8010	7369	0.92	848
88	72	9810	7848	0.80	795	9180	7344	0.80	840	8550	6840	0.80	870
88	75	10350	7038	0.68	825	9720	6610	0.68	863	9180	6242	0.68	900
88	79	10890	6098	0.56	855	10260	5746	0.56	893	9630	5393	0.56	930
90	64	8820	8820	1.00	735	8100	8100	1.00	780	7470	7470	1.00	810
90	68	9270	8899	0.96	765	8640	8294	0.96	803	8010	7690	0.96	848
90	72	9810	8240	0.84	795	9180	7711	0.84	840	8550	7182	0.84	870
90	75	10350	7452	0.72	825	9720	6998	0.72	863	9180	6610	0.72	900
90	79	10890	6534	0.60	855	10260	6156	0.60	893	9630	5778	0.60	930

NOTE CA: Capacity (Btu/h) SHF: Sensible heat factor DB: Dry-bulb temperature
SHC: Sensible heat capacity (Btu/h) P.C. : Power consumption (W) WB: Wet-bulb temperature

MUZ-HM12NA

CAPACITY (Btu/h): 12000 INPUT (W): 1210 SHF: 0.77

INDOOR DB (°F)	INDOOR WB (°F)	OUTDOOR DB (°F)															
		70				77				81				86			
		CA	SHC	SHF	P.C.	CA	SHC	SHF	P.C.	CA	SHC	SHF	P.C.	CA	SHC	SHF	P.C.
70	64	14100	8319	0.59	968	13500	7965	0.59	1016	12960	7646	0.59	1065	12480	7363	0.59	1113
70	68	14700	6909	0.47	1016	14100	6627	0.47	1077	13680	6430	0.47	1101	13200	6204	0.47	1150
72	64	14100	8883	0.63	968	13500	8505	0.63	1016	12960	8165	0.63	1065	12480	7862	0.63	1113
72	68	14700	7497	0.51	1016	14100	7191	0.51	1077	13680	6977	0.51	1101	13200	6732	0.51	1150
72	72	15300	5967	0.39	1053	14760	5756	0.39	1119	14400	5616	0.39	1150	13800	5382	0.39	1198
73	64	14100	9447	0.67	968	13500	9045	0.67	1016	12960	8683	0.67	1065	12480	8362	0.67	1113
73	68	14700	8085	0.55	1016	14100	7755	0.55	1077	13680	7524	0.55	1101	13200	7260	0.55	1150
73	72	15300	6579	0.43	1053	14760	6347	0.43	1119	14400	6192	0.43	1150	13800	5934	0.43	1198
75	64	14100	10011	0.71	968	13500	9585	0.71	1016	12960	9202	0.71	1065	12480	8861	0.71	1113
75	68	14700	8673	0.59	1016	14100	8319	0.59	1077	13680	8071	0.59	1101	13200	7788	0.59	1150
75	72	15300	7191	0.47	1053	14760	6937	0.47	1119	14400	6768	0.47	1150	13800	6486	0.47	1198
75	75	16080	5628	0.35	1101	15480	5418	0.35	1162	15120	5292	0.35	1198	14640	5124	0.35	1258
77	64	14100	10575	0.75	968	13500	10125	0.75	1016	12960	9720	0.75	1065	12480	9360	0.75	1113
77	68	14700	9261	0.63	1016	14100	8883	0.63	1077	13680	8618	0.63	1101	13200	8316	0.63	1150
77	72	15300	7803	0.51	1053	14760	7528	0.51	1119	14400	7344	0.51	1150	13800	7038	0.51	1198
77	75	16080	6271	0.39	1101	15480	6037	0.39	1162	15120	5897	0.39	1198	14640	5710	0.39	1258
79	64	14100	11139	0.79	968	13500	10665	0.79	1016	12960	10238	0.79	1065	12480	9859	0.79	1113
79	68	14700	9849	0.67	1016	14100	9447	0.67	1077	13680	9166	0.67	1101	13200	8844	0.67	1150
79	72	15300	8415	0.55	1053	14760	8118	0.55	1119	14400	7920	0.55	1150	13800	7590	0.55	1198
79	75	16080	6914	0.43	1101	15480	6656	0.43	1162	15120	6502	0.43	1198	14640	6295	0.43	1258
79	79	16560	5134	0.31	1162	16080	4985	0.31	1222	15840	4910	0.31	1258	15360	4762	0.31	1295
81	64	14100	11703	0.83	968	13500	11205	0.83	1016	12960	10757	0.83	1065	12480	10358	0.83	1113
81	68	14700	10437	0.71	1016	14100	10011	0.71	1077	13680	9713	0.71	1101	13200	9372	0.71	1150
81	72	15300	9027	0.59	1053	14760	8708	0.59	1119	14400	8496	0.59	1150	13800	8142	0.59	1198
81	75	16080	7558	0.47	1101	15480	7276	0.47	1162	15120	7106	0.47	1198	14640	6881	0.47	1258
81	79	16560	5796	0.35	1162	16080	5628	0.35	1222	15840	5544	0.35	1258	15360	5376	0.35	1295
82	64	14100	12267	0.87	968	13500	11745	0.87	1016	12960	11275	0.87	1065	12480	10858	0.87	1113
82	68	14700	11025	0.75	1016	14100	10575	0.75	1077	13680	10260	0.75	1101	13200	9900	0.75	1150
82	72	15300	9639	0.63	1053	14760	9299	0.63	1119	14400	9072	0.63	1150	13800	8694	0.63	1198
82	75	16080	8201	0.51	1101	15480	7895	0.51	1162	15120	7711	0.51	1198	14640	7466	0.51	1258
82	79	16560	6458	0.39	1162	16080	6271	0.39	1222	15840	6178	0.39	1258	15360	5990	0.39	1295
84	64	14100	12831	0.91	968	13500	12285	0.91	1016	12960	11794	0.91	1065	12480	11357	0.91	1113
84	68	14700	11613	0.79	1016	14100	11139	0.79	1077	13680	10807	0.79	1101	13200	10428	0.79	1150
84	72	15300	10251	0.67	1053	14760	9889	0.67	1119	14400	9648	0.67	1150	13800	9246	0.67	1198
84	75	16080	8844	0.55	1101	15480	8514	0.55	1162	15120	8316	0.55	1198	14640	8052	0.55	1258
84	79	16560	7121	0.43	1162	16080	6914	0.43	1222	15840	6811	0.43	1258	15360	6605	0.43	1295
86	64	14100	13395	0.95	968	13500	12825	0.95	1016	12960	12312	0.95	1065	12480	11856	0.95	1113
86	68	14700	12201	0.83	1016	14100	11703	0.83	1077	13680	11354	0.83	1101	13200	10956	0.83	1150
86	72	15300	10863	0.71	1053	14760	10480	0.71	1119	14400	10224	0.71	1150	13800	9798	0.71	1198
86	75	16080	9487	0.59	1101	15480	9133	0.59	1162	15120	8921	0.59	1198	14640	8638	0.59	1258
86	79	16560	7783	0.47	1162	16080	7558	0.47	1222	15840	7445	0.47	1258	15360	7219	0.47	1295
88	64	14100	13959	0.99	968	13500	13365	0.99	1016	12960	12830	0.99	1065	12480	12355	0.99	1113
88	68	14700	12789	0.87	1016	14100	12267	0.87	1077	13680	11902	0.87	1101	13200	11484	0.87	1150
88	72	15300	11475	0.75	1053	14760	11070	0.75	1119	14400	10800	0.75	1150	13800	10350	0.75	1198
88	75	16080	10130	0.63	1101	15480	9752	0.63	1162	15120	9526	0.63	1198	14640	9223	0.63	1258
88	79	16560	8446	0.51	1162	16080	8201	0.51	1222	15840	8078	0.51	1258	15360	7834	0.51	1295
90	64	14100	14100	1.00	968	13500	13500	1.00	1016	12960	12960	1.00	1065	12480	12480	1.00	1113
90	68	14700	13377	0.91	1016	14100	12831	0.91	1077	13680	12449	0.91	1101	13200	12012	0.91	1150
90	72	15300	12087	0.79	1053	14760	11660	0.79	1119	14400	11376	0.79	1150	13800	10902	0.79	1198
90	75	16080	10774	0.67	1101	15480	10372	0.67	1162	15120	10130	0.67	1198	14640	9809	0.67	1258
90	79	16560	9108	0.55	1162	16080	8844	0.55	1222	15840	8712	0.55	1258	15360	8448	0.55	1295

NOTE CA: Capacity (Btu/h) SHF: Sensible heat factor DB: Dry-bulb temperature
SHC: Sensible heat capacity (Btu/h) P.C. : Power consumption (W) WB: Wet-bulb temperature

MUZ-HM12NA

CAPACITY (Btu/h): 12000 INPUT (W): 1210 SHF: 0.77

INDOOR DB (°F)	INDOOR WB (°F)	OUTDOOR DB (°F)											
		95				104				115			
		CA	SHC	SHF	P.C.	CA	SHC	SHF	P.C.	CA	SHC	SHF	P.C.
70	64	11760	6938	0.59	1186	10800	6372	0.59	1258	9960	5876	0.59	1307
70	68	12360	5809	0.47	1234	11520	5414	0.47	1295	10680	5020	0.47	1367
72	64	11760	7409	0.63	1186	10800	6804	0.63	1258	9960	6275	0.63	1307
72	68	12360	6304	0.51	1234	11520	5875	0.51	1295	10680	5447	0.51	1367
72	72	13080	5101	0.39	1283	12240	4774	0.39	1355	11400	4446	0.39	1404
73	64	11760	7879	0.67	1186	10800	7236	0.67	1258	9960	6673	0.67	1307
73	68	12360	6798	0.55	1234	11520	6336	0.55	1295	10680	5874	0.55	1367
73	72	13080	5624	0.43	1283	12240	5263	0.43	1355	11400	4902	0.43	1404
75	64	11760	8350	0.71	1186	10800	7668	0.71	1258	9960	7072	0.71	1307
75	68	12360	7292	0.59	1234	11520	6797	0.59	1295	10680	6301	0.59	1367
75	72	13080	6148	0.47	1283	12240	5753	0.47	1355	11400	5358	0.47	1404
75	75	13800	4830	0.35	1331	12960	4536	0.35	1392	12240	4284	0.35	1452
77	64	11760	8820	0.75	1186	10800	8100	0.75	1258	9960	7470	0.75	1307
77	68	12360	7787	0.63	1234	11520	7258	0.63	1295	10680	6728	0.63	1367
77	72	13080	6671	0.51	1283	12240	6242	0.51	1355	11400	5814	0.51	1404
77	75	13800	5382	0.39	1331	12960	5054	0.39	1392	12240	4774	0.39	1452
79	64	11760	9290	0.79	1186	10800	8532	0.79	1258	9960	7868	0.79	1307
79	68	12360	8281	0.67	1234	11520	7718	0.67	1295	10680	7156	0.67	1367
79	72	13080	7194	0.55	1283	12240	6732	0.55	1355	11400	6270	0.55	1404
79	75	13800	5934	0.43	1331	12960	5573	0.43	1392	12240	5263	0.43	1452
79	79	14520	4501	0.31	1379	13680	4241	0.31	1440	12840	3980	0.31	1500
81	64	11760	9761	0.83	1186	10800	8964	0.83	1258	9960	8267	0.83	1307
81	68	12360	8776	0.71	1234	11520	8179	0.71	1295	10680	7583	0.71	1367
81	72	13080	7717	0.59	1283	12240	7222	0.59	1355	11400	6726	0.59	1404
81	75	13800	6486	0.47	1331	12960	6091	0.47	1392	12240	5753	0.47	1452
81	79	14520	5082	0.35	1379	13680	4788	0.35	1440	12840	4494	0.35	1500
82	64	11760	10231	0.87	1186	10800	9396	0.87	1258	9960	8665	0.87	1307
82	68	12360	9270	0.75	1234	11520	8640	0.75	1295	10680	8010	0.75	1367
82	72	13080	8240	0.63	1283	12240	7711	0.63	1355	11400	7182	0.63	1404
82	75	13800	7038	0.51	1331	12960	6610	0.51	1392	12240	6242	0.51	1452
82	79	14520	5663	0.39	1379	13680	5335	0.39	1440	12840	5008	0.39	1500
84	64	11760	10702	0.91	1186	10800	9828	0.91	1258	9960	9064	0.91	1307
84	68	12360	9764	0.79	1234	11520	9101	0.79	1295	10680	8437	0.79	1367
84	72	13080	8764	0.67	1283	12240	8201	0.67	1355	11400	7638	0.67	1404
84	75	13800	7590	0.55	1331	12960	7128	0.55	1392	12240	6732	0.55	1452
84	79	14520	6244	0.43	1379	13680	5882	0.43	1440	12840	5521	0.43	1500
86	64	11760	11172	0.95	1186	10800	10260	0.95	1258	9960	9462	0.95	1307
86	68	12360	10259	0.83	1234	11520	9562	0.83	1295	10680	8864	0.83	1367
86	72	13080	9287	0.71	1283	12240	8690	0.71	1355	11400	8094	0.71	1404
86	75	13800	8142	0.59	1331	12960	7646	0.59	1392	12240	7222	0.59	1452
86	79	14520	6824	0.47	1379	13680	6430	0.47	1440	12840	6035	0.47	1500
88	64	11760	11642	0.99	1186	10800	10692	0.99	1258	9960	9860	0.99	1307
88	68	12360	10753	0.87	1234	11520	10022	0.87	1295	10680	9292	0.87	1367
88	72	13080	9810	0.75	1283	12240	9180	0.75	1355	11400	8550	0.75	1404
88	75	13800	8694	0.63	1331	12960	8165	0.63	1392	12240	7711	0.63	1452
88	79	14520	7405	0.51	1379	13680	6977	0.51	1440	12840	6548	0.51	1500
90	64	11760	11760	1.00	1186	10800	10800	1.00	1258	9960	9960	1.00	1307
90	68	12360	11248	0.91	1234	11520	10483	0.91	1295	10680	9719	0.91	1367
90	72	13080	10333	0.79	1283	12240	9670	0.79	1355	11400	9006	0.79	1404
90	75	13800	9246	0.67	1331	12960	8683	0.67	1392	12240	8201	0.67	1452
90	79	14520	7986	0.55	1379	13680	7524	0.55	1440	12840	7062	0.55	1500

NOTE CA: Capacity (Btu/h) SHF: Sensible heat factor DB: Dry-bulb temperature
SHC: Sensible heat capacity (Btu/h) P.C. : Power consumption (W) WB: Wet-bulb temperature

MUZ-HM15NA

CAPACITY (Btu/h): 14000 INPUT (W): 1170 SHF: 0.78

INDOOR DB (°F)	INDOOR WB (°F)	OUTDOOR DB (°F)															
		70				77				81				86			
		CA	SHC	SHF	P.C.	CA	SHC	SHF	P.C.	CA	SHC	SHF	P.C.	CA	SHC	SHF	P.C.
70	64	16450	9870	0.60	936	15750	9450	0.60	983	15120	9072	0.60	1030	14560	8736	0.60	1076
70	68	17150	8232	0.48	983	16450	7896	0.48	1041	15960	7661	0.48	1065	15400	7392	0.48	1112
72	64	16450	10528	0.64	936	15750	10080	0.64	983	15120	9677	0.64	1030	14560	9318	0.64	1076
72	68	17150	8918	0.52	983	16450	8554	0.52	1041	15960	8299	0.52	1065	15400	8008	0.52	1112
72	72	17850	7140	0.40	1018	17220	6888	0.40	1082	16800	6720	0.40	1112	16100	6440	0.40	1158
73	64	16450	11186	0.68	936	15750	10710	0.68	983	15120	10282	0.68	1030	14560	9901	0.68	1076
73	68	17150	9604	0.56	983	16450	9212	0.56	1041	15960	8938	0.56	1065	15400	8624	0.56	1112
73	72	17850	7854	0.44	1018	17220	7577	0.44	1082	16800	7392	0.44	1112	16100	7084	0.44	1158
75	64	16450	11844	0.72	936	15750	11340	0.72	983	15120	10886	0.72	1030	14560	10483	0.72	1076
75	68	17150	10290	0.60	983	16450	9870	0.60	1041	15960	9576	0.60	1065	15400	9240	0.60	1112
75	72	17850	8568	0.48	1018	17220	8266	0.48	1082	16800	8064	0.48	1112	16100	7728	0.48	1158
75	75	18760	6754	0.36	1065	18060	6502	0.36	1123	17640	6350	0.36	1158	17080	6149	0.36	1217
77	64	16450	12502	0.76	936	15750	11970	0.76	983	15120	11491	0.76	1030	14560	11066	0.76	1076
77	68	17150	10976	0.64	983	16450	10528	0.64	1041	15960	10214	0.64	1065	15400	9856	0.64	1112
77	72	17850	9282	0.52	1018	17220	8954	0.52	1082	16800	8736	0.52	1112	16100	8372	0.52	1158
77	75	18760	7504	0.40	1065	18060	7224	0.40	1123	17640	7056	0.40	1158	17080	6832	0.40	1217
79	64	16450	13160	0.80	936	15750	12600	0.80	983	15120	12096	0.80	1030	14560	11648	0.80	1076
79	68	17150	11662	0.68	983	16450	11186	0.68	1041	15960	10853	0.68	1065	15400	10472	0.68	1112
79	72	17850	9996	0.56	1018	17220	9643	0.56	1082	16800	9408	0.56	1112	16100	9016	0.56	1158
79	75	18760	8254	0.44	1065	18060	7946	0.44	1123	17640	7762	0.44	1158	17080	7515	0.44	1217
79	79	19320	6182	0.32	1123	18760	6003	0.32	1182	18480	5914	0.32	1217	17920	5734	0.32	1252
81	64	16450	13818	0.84	936	15750	13230	0.84	983	15120	12701	0.84	1030	14560	12230	0.84	1076
81	68	17150	12348	0.72	983	16450	11844	0.72	1041	15960	11491	0.72	1065	15400	11088	0.72	1112
81	72	17850	10710	0.60	1018	17220	10332	0.60	1082	16800	10080	0.60	1112	16100	9660	0.60	1158
81	75	18760	9005	0.48	1065	18060	8669	0.48	1123	17640	8467	0.48	1158	17080	8198	0.48	1217
81	79	19320	6955	0.36	1123	18760	6754	0.36	1182	18480	6653	0.36	1217	17920	6451	0.36	1252
82	64	16450	14476	0.88	936	15750	13860	0.88	983	15120	13306	0.88	1030	14560	12813	0.88	1076
82	68	17150	13034	0.76	983	16450	12502	0.76	1041	15960	12130	0.76	1065	15400	11704	0.76	1112
82	72	17850	11424	0.64	1018	17220	11021	0.64	1082	16800	10752	0.64	1112	16100	10304	0.64	1158
82	75	18760	9755	0.52	1065	18060	9391	0.52	1123	17640	9173	0.52	1158	17080	8882	0.52	1217
82	79	19320	7728	0.40	1123	18760	7504	0.40	1182	18480	7392	0.40	1217	17920	7168	0.40	1252
84	64	16450	15134	0.92	936	15750	14490	0.92	983	15120	13910	0.92	1030	14560	13395	0.92	1076
84	68	17150	13720	0.80	983	16450	13160	0.80	1041	15960	12768	0.80	1065	15400	12320	0.80	1112
84	72	17850	12138	0.68	1018	17220	11710	0.68	1082	16800	11424	0.68	1112	16100	10948	0.68	1158
84	75	18760	10506	0.56	1065	18060	10114	0.56	1123	17640	9878	0.56	1158	17080	9565	0.56	1217
84	79	19320	8501	0.44	1123	18760	8254	0.44	1182	18480	8131	0.44	1217	17920	7885	0.44	1252
86	64	16450	15792	0.96	936	15750	15120	0.96	983	15120	14515	0.96	1030	14560	13978	0.96	1076
86	68	17150	14406	0.84	983	16450	13818	0.84	1041	15960	13406	0.84	1065	15400	12936	0.84	1112
86	72	17850	12852	0.72	1018	17220	12398	0.72	1082	16800	12096	0.72	1112	16100	11592	0.72	1158
86	75	18760	11256	0.60	1065	18060	10836	0.60	1123	17640	10584	0.60	1158	17080	10248	0.60	1217
86	79	19320	9274	0.48	1123	18760	9005	0.48	1182	18480	8870	0.48	1217	17920	8602	0.48	1252
88	64	16450	16450	1.00	936	15750	15750	1.00	983	15120	15120	1.00	1030	14560	14560	1.00	1076
88	68	17150	15092	0.88	983	16450	14476	0.88	1041	15960	14045	0.88	1065	15400	13552	0.88	1112
88	72	17850	13566	0.76	1018	17220	13087	0.76	1082	16800	12768	0.76	1112	16100	12236	0.76	1158
88	75	18760	12006	0.64	1065	18060	11558	0.64	1123	17640	11290	0.64	1158	17080	10931	0.64	1217
88	79	19320	10046	0.52	1123	18760	9755	0.52	1182	18480	9610	0.52	1217	17920	9318	0.52	1252
90	64	16450	16450	1.00	936	15750	15750	1.00	983	15120	15120	1.00	1030	14560	14560	1.00	1076
90	68	17150	15778	0.92	983	16450	15134	0.92	1041	15960	14683	0.92	1065	15400	14168	0.92	1112
90	72	17850	14280	0.80	1018	17220	13776	0.80	1082	16800	13440	0.80	1112	16100	12880	0.80	1158
90	75	18760	12757	0.68	1065	18060	12281	0.68	1123	17640	11995	0.68	1158	17080	11614	0.68	1217
90	79	19320	10819	0.56	1123	18760	10506	0.56	1182	18480	10349	0.56	1217	17920	10035	0.56	1252

NOTE CA: Capacity (Btu/h) SHF: Sensible heat factor DB: Dry-bulb temperature
SHC: Sensible heat capacity (Btu/h) P.C. : Power consumption (W) WB: Wet-bulb temperature

MUZ-HM15NA

CAPACITY (Btu/h): 14000 INPUT (W): 1170 SHF: 0.78

INDOOR DB (°F)	INDOOR WB (°F)	OUTDOOR DB (°F)											
		95				104				115			
		CA	SHC	SHF	P.C.	CA	SHC	SHF	P.C.	CA	SHC	SHF	P.C.
70	64	13720	8232	0.60	1147	12600	7560	0.60	1217	11620	6972	0.60	1264
70	68	14420	6922	0.48	1193	13440	6451	0.48	1252	12460	5981	0.48	1322
72	64	13720	8781	0.64	1147	12600	8064	0.64	1217	11620	7437	0.64	1264
72	68	14420	7498	0.52	1193	13440	6989	0.52	1252	12460	6479	0.52	1322
72	72	15260	6104	0.40	1240	14280	5712	0.40	1310	13300	5320	0.40	1357
73	64	13720	9330	0.68	1147	12600	8568	0.68	1217	11620	7902	0.68	1264
73	68	14420	8075	0.56	1193	13440	7526	0.56	1252	12460	6978	0.56	1322
73	72	15260	6714	0.44	1240	14280	6283	0.44	1310	13300	5852	0.44	1357
75	64	13720	9878	0.72	1147	12600	9072	0.72	1217	11620	8366	0.72	1264
75	68	14420	8652	0.60	1193	13440	8064	0.60	1252	12460	7476	0.60	1322
75	72	15260	7325	0.48	1240	14280	6854	0.48	1310	13300	6384	0.48	1357
75	75	16100	5796	0.36	1287	15120	5443	0.36	1346	14280	5141	0.36	1404
77	64	13720	10427	0.76	1147	12600	9576	0.76	1217	11620	8831	0.76	1264
77	68	14420	9229	0.64	1193	13440	8602	0.64	1252	12460	7974	0.64	1322
77	72	15260	7935	0.52	1240	14280	7426	0.52	1310	13300	6916	0.52	1357
77	75	16100	6440	0.40	1287	15120	6048	0.40	1346	14280	5712	0.40	1404
79	64	13720	10976	0.80	1147	12600	10080	0.80	1217	11620	9296	0.80	1264
79	68	14420	9806	0.68	1193	13440	9139	0.68	1252	12460	8473	0.68	1322
79	72	15260	8546	0.56	1240	14280	7997	0.56	1310	13300	7448	0.56	1357
79	75	16100	7084	0.44	1287	15120	6653	0.44	1346	14280	6283	0.44	1404
79	79	16940	5421	0.32	1334	15960	5107	0.32	1392	14980	4794	0.32	1451
81	64	13720	11525	0.84	1147	12600	10584	0.84	1217	11620	9761	0.84	1264
81	68	14420	10382	0.72	1193	13440	9677	0.72	1252	12460	8971	0.72	1322
81	72	15260	9156	0.60	1240	14280	8568	0.60	1310	13300	7980	0.60	1357
81	75	16100	7728	0.48	1287	15120	7258	0.48	1346	14280	6854	0.48	1404
81	79	16940	6098	0.36	1334	15960	5746	0.36	1392	14980	5393	0.36	1451
82	64	13720	12074	0.88	1147	12600	11088	0.88	1217	11620	10226	0.88	1264
82	68	14420	10959	0.76	1193	13440	10214	0.76	1252	12460	9470	0.76	1322
82	72	15260	9766	0.64	1240	14280	9139	0.64	1310	13300	8512	0.64	1357
82	75	16100	8372	0.52	1287	15120	7862	0.52	1346	14280	7426	0.52	1404
82	79	16940	6776	0.40	1334	15960	6384	0.40	1392	14980	5992	0.40	1451
84	64	13720	12622	0.92	1147	12600	11592	0.92	1217	11620	10690	0.92	1264
84	68	14420	11536	0.80	1193	13440	10752	0.80	1252	12460	9968	0.80	1322
84	72	15260	10377	0.68	1240	14280	9710	0.68	1310	13300	9044	0.68	1357
84	75	16100	9016	0.56	1287	15120	8467	0.56	1346	14280	7997	0.56	1404
84	79	16940	7454	0.44	1334	15960	7022	0.44	1392	14980	6591	0.44	1451
86	64	13720	13171	0.96	1147	12600	12096	0.96	1217	11620	11155	0.96	1264
86	68	14420	12113	0.84	1193	13440	11290	0.84	1252	12460	10466	0.84	1322
86	72	15260	10987	0.72	1240	14280	10282	0.72	1310	13300	9576	0.72	1357
86	75	16100	9660	0.60	1287	15120	9072	0.60	1346	14280	8568	0.60	1404
86	79	16940	8131	0.48	1334	15960	7661	0.48	1392	14980	7190	0.48	1451
88	64	13720	13720	1.00	1147	12600	12600	1.00	1217	11620	11620	1.00	1264
88	68	14420	12690	0.88	1193	13440	11827	0.88	1252	12460	10965	0.88	1322
88	72	15260	11598	0.76	1240	14280	10853	0.76	1310	13300	10108	0.76	1357
88	75	16100	10304	0.64	1287	15120	9677	0.64	1346	14280	9139	0.64	1404
88	79	16940	8809	0.52	1334	15960	8299	0.52	1392	14980	7790	0.52	1451
90	64	13720	13720	1.00	1147	12600	12600	1.00	1217	11620	11620	1.00	1264
90	68	14420	13266	0.92	1193	13440	12365	0.92	1252	12460	11463	0.92	1322
90	72	15260	12208	0.80	1240	14280	11424	0.80	1310	13300	10640	0.80	1357
90	75	16100	10948	0.68	1287	15120	10282	0.68	1346	14280	9710	0.68	1404
90	79	16940	9486	0.56	1334	15960	8938	0.56	1392	14980	8389	0.56	1451

NOTE CA: Capacity (Btu/h) SHF: Sensible heat factor DB: Dry-bulb temperature
SHC: Sensible heat capacity (Btu/h) P.C. : Power consumption (W) WB: Wet-bulb temperature

MUZ-HM18NA

CAPACITY (Btu/h): 17200 INPUT (W): 1640 SHF: 0.86

INDOOR DB (°F)	INDOOR WB (°F)	OUTDOOR DB (°F)															
		70				77				81				86			
		CA	SHC	SHF	P.C.	CA	SHC	SHF	P.C.	CA	SHC	SHF	P.C.	CA	SHC	SHF	P.C.
70	64	20210	13743	0.68	1312	19350	13158	0.68	1378	18576	12632	0.68	1443	17888	12164	0.68	1509
70	68	21070	11799	0.56	1378	20210	11318	0.56	1460	19608	10980	0.56	1492	18920	10595	0.56	1558
72	64	20210	14551	0.72	1312	19350	13932	0.72	1378	18576	13375	0.72	1443	17888	12879	0.72	1509
72	68	21070	12642	0.60	1378	20210	12126	0.60	1460	19608	11765	0.60	1492	18920	11352	0.60	1558
72	72	21930	10526	0.48	1427	21156	10155	0.48	1517	20640	9907	0.48	1558	19780	9494	0.48	1624
73	64	20210	15360	0.76	1312	19350	14706	0.76	1378	18576	14118	0.76	1443	17888	13595	0.76	1509
73	68	21070	13485	0.64	1378	20210	12934	0.64	1460	19608	12549	0.64	1492	18920	12109	0.64	1558
73	72	21930	11404	0.52	1427	21156	11001	0.52	1517	20640	10733	0.52	1558	19780	10286	0.52	1624
75	64	20210	16168	0.80	1312	19350	15480	0.80	1378	18576	14861	0.80	1443	17888	14310	0.80	1509
75	68	21070	14328	0.68	1378	20210	13743	0.68	1460	19608	13333	0.68	1492	18920	12866	0.68	1558
75	72	21930	12281	0.56	1427	21156	11847	0.56	1517	20640	11558	0.56	1558	19780	11077	0.56	1624
75	75	23048	10141	0.44	1492	22188	9763	0.44	1574	21672	9536	0.44	1624	20984	9233	0.44	1706
77	64	20210	16976	0.84	1312	19350	16254	0.84	1378	18576	15604	0.84	1443	17888	15026	0.84	1509
77	68	21070	15170	0.72	1378	20210	14551	0.72	1460	19608	14118	0.72	1492	18920	13622	0.72	1558
77	72	21930	13158	0.60	1427	21156	12694	0.60	1517	20640	12384	0.60	1558	19780	11868	0.60	1624
77	75	23048	11063	0.48	1492	22188	10650	0.48	1574	21672	10403	0.48	1624	20984	10072	0.48	1706
79	64	20210	17785	0.88	1312	19350	17028	0.88	1378	18576	16347	0.88	1443	17888	15741	0.88	1509
79	68	21070	16013	0.76	1378	20210	15360	0.76	1460	19608	14902	0.76	1492	18920	14379	0.76	1558
79	72	21930	14035	0.64	1427	21156	13540	0.64	1517	20640	13210	0.64	1558	19780	12659	0.64	1624
79	75	23048	11985	0.52	1492	22188	11538	0.52	1574	21672	11269	0.52	1624	20984	10912	0.52	1706
79	79	23736	9494	0.40	1574	23048	9219	0.40	1656	22704	9082	0.40	1706	22016	8806	0.40	1755
81	64	20210	18593	0.92	1312	19350	17802	0.92	1378	18576	17090	0.92	1443	17888	16457	0.92	1509
81	68	21070	16856	0.80	1378	20210	16168	0.80	1460	19608	15686	0.80	1492	18920	15136	0.80	1558
81	72	21930	14912	0.68	1427	21156	14386	0.68	1517	20640	14035	0.68	1558	19780	13450	0.68	1624
81	75	23048	12907	0.56	1492	22188	12425	0.56	1574	21672	12136	0.56	1624	20984	11751	0.56	1706
81	79	23736	10444	0.44	1574	23048	10141	0.44	1656	22704	9990	0.44	1706	22016	9687	0.44	1755
82	64	20210	19402	0.96	1312	19350	18576	0.96	1378	18576	17833	0.96	1443	17888	17172	0.96	1509
82	68	21070	17699	0.84	1378	20210	16976	0.84	1460	19608	16471	0.84	1492	18920	15893	0.84	1558
82	72	21930	15790	0.72	1427	21156	15232	0.72	1517	20640	14861	0.72	1558	19780	14242	0.72	1624
82	75	23048	13829	0.60	1492	22188	13313	0.60	1574	21672	13003	0.60	1624	20984	12590	0.60	1706
82	79	23736	11393	0.48	1574	23048	11063	0.48	1656	22704	10898	0.48	1706	22016	10568	0.48	1755
84	64	20210	20210	1.00	1312	19350	19350	1.00	1378	18576	18576	1.00	1443	17888	17888	1.00	1509
84	68	21070	18542	0.88	1378	20210	17785	0.88	1460	19608	17255	0.88	1492	18920	16650	0.88	1558
84	72	21930	16667	0.76	1427	21156	16079	0.76	1517	20640	15686	0.76	1558	19780	15033	0.76	1624
84	75	23048	14751	0.64	1492	22188	14200	0.64	1574	21672	13870	0.64	1624	20984	13430	0.64	1706
84	79	23736	12343	0.52	1574	23048	11985	0.52	1656	22704	11806	0.52	1706	22016	11448	0.52	1755
86	64	20210	20210	1.00	1312	19350	19350	1.00	1378	18576	18576	1.00	1443	17888	17888	1.00	1509
86	68	21070	19384	0.92	1378	20210	18593	0.92	1460	19608	18039	0.92	1492	18920	17406	0.92	1558
86	72	21930	17544	0.80	1427	21156	16925	0.80	1517	20640	16512	0.80	1558	19780	15824	0.80	1624
86	75	23048	15673	0.68	1492	22188	15088	0.68	1574	21672	14737	0.68	1624	20984	14269	0.68	1706
86	79	23736	13292	0.56	1574	23048	12907	0.56	1656	22704	12714	0.56	1706	22016	12329	0.56	1755
88	64	20210	20210	1.00	1312	19350	19350	1.00	1378	18576	18576	1.00	1443	17888	17888	1.00	1509
88	68	21070	20227	0.96	1378	20210	19402	0.96	1460	19608	18824	0.96	1492	18920	18163	0.96	1558
88	72	21930	18421	0.84	1427	21156	17771	0.84	1517	20640	17338	0.84	1558	19780	16615	0.84	1624
88	75	23048	16595	0.72	1492	22188	15975	0.72	1574	21672	15604	0.72	1624	20984	15108	0.72	1706
88	79	23736	14242	0.60	1574	23048	13829	0.60	1656	22704	13622	0.60	1706	22016	13210	0.60	1755
90	64	20210	20210	1.00	1312	19350	19350	1.00	1378	18576	18576	1.00	1443	17888	17888	1.00	1509
90	68	21070	21070	1.00	1378	20210	20210	1.00	1460	19608	19608	1.00	1492	18920	18920	1.00	1558
90	72	21930	19298	0.88	1427	21156	18617	0.88	1517	20640	18163	0.88	1558	19780	17406	0.88	1624
90	75	23048	17516	0.76	1492	22188	16863	0.76	1574	21672	16471	0.76	1624	20984	15948	0.76	1706
90	79	23736	15191	0.64	1574	23048	14751	0.64	1656	22704	14531	0.64	1706	22016	14090	0.64	1755

NOTE CA: Capacity (Btu/h) SHF: Sensible heat factor DB: Dry-bulb temperature
SHC: Sensible heat capacity (Btu/h) P.C. : Power consumption (W) WB: Wet-bulb temperature

MUZ-HM18NA

CAPACITY (Btu/h): 17200 INPUT (W): 1640 SHF: 0.86

INDOOR DB (°F)	INDOOR WB (°F)	OUTDOOR DB (°F)											
		95				104				115			
		CA	SHC	SHF	P.C.	CA	SHC	SHF	P.C.	CA	SHC	SHF	P.C.
70	64	16856	11462	0.68	1607	15480	10526	0.68	1706	14276	9708	0.68	1771
70	68	17716	9921	0.56	1673	16512	9247	0.56	1755	15308	8572	0.56	1853
72	64	16856	12136	0.72	1607	15480	11146	0.72	1706	14276	10279	0.72	1771
72	68	17716	10630	0.60	1673	16512	9907	0.60	1755	15308	9185	0.60	1853
72	72	18748	8999	0.48	1738	17544	8421	0.48	1837	16340	7843	0.48	1902
73	64	16856	12811	0.76	1607	15480	11765	0.76	1706	14276	10850	0.76	1771
73	68	17716	11338	0.64	1673	16512	10568	0.64	1755	15308	9797	0.64	1853
73	72	18748	9749	0.52	1738	17544	9123	0.52	1837	16340	8497	0.52	1902
75	64	16856	13485	0.80	1607	15480	12384	0.80	1706	14276	11421	0.80	1771
75	68	17716	12047	0.68	1673	16512	11228	0.68	1755	15308	10409	0.68	1853
75	72	18748	10499	0.56	1738	17544	9825	0.56	1837	16340	9150	0.56	1902
75	75	19780	8703	0.44	1804	18576	8173	0.44	1886	17544	7719	0.44	1968
77	64	16856	14159	0.84	1607	15480	13003	0.84	1706	14276	11992	0.84	1771
77	68	17716	12756	0.72	1673	16512	11889	0.72	1755	15308	11022	0.72	1853
77	72	18748	11249	0.60	1738	17544	10526	0.60	1837	16340	9804	0.60	1902
77	75	19780	9494	0.48	1804	18576	8916	0.48	1886	17544	8421	0.48	1968
79	64	16856	14833	0.88	1607	15480	13622	0.88	1706	14276	12563	0.88	1771
79	68	17716	13464	0.76	1673	16512	12549	0.76	1755	15308	11634	0.76	1853
79	72	18748	11999	0.64	1738	17544	11228	0.64	1837	16340	10458	0.64	1902
79	75	19780	10286	0.52	1804	18576	9660	0.52	1886	17544	9123	0.52	1968
79	79	20812	8325	0.40	1870	19608	7843	0.40	1952	18404	7362	0.40	2034
81	64	16856	15508	0.92	1607	15480	14242	0.92	1706	14276	13134	0.92	1771
81	68	17716	14173	0.80	1673	16512	13210	0.80	1755	15308	12246	0.80	1853
81	72	18748	12749	0.68	1738	17544	11930	0.68	1837	16340	11111	0.68	1902
81	75	19780	11077	0.56	1804	18576	10403	0.56	1886	17544	9825	0.56	1968
81	79	20812	9157	0.44	1870	19608	8628	0.44	1952	18404	8098	0.44	2034
82	64	16856	16182	0.96	1607	15480	14861	0.96	1706	14276	13705	0.96	1771
82	68	17716	14881	0.84	1673	16512	13870	0.84	1755	15308	12859	0.84	1853
82	72	18748	13499	0.72	1738	17544	12632	0.72	1837	16340	11765	0.72	1902
82	75	19780	11868	0.60	1804	18576	11146	0.60	1886	17544	10526	0.60	1968
82	79	20812	9990	0.48	1870	19608	9412	0.48	1952	18404	8834	0.48	2034
84	64	16856	16856	1.00	1607	15480	15480	1.00	1706	14276	14276	1.00	1771
84	68	17716	15590	0.88	1673	16512	14531	0.88	1755	15308	13471	0.88	1853
84	72	18748	14248	0.76	1738	17544	13333	0.76	1837	16340	12418	0.76	1902
84	75	19780	12659	0.64	1804	18576	11889	0.64	1886	17544	11228	0.64	1968
84	79	20812	10822	0.52	1870	19608	10196	0.52	1952	18404	9570	0.52	2034
86	64	16856	16856	1.00	1607	15480	15480	1.00	1706	14276	14276	1.00	1771
86	68	17716	16299	0.92	1673	16512	15191	0.92	1755	15308	14083	0.92	1853
86	72	18748	14998	0.80	1738	17544	14035	0.80	1837	16340	13072	0.80	1902
86	75	19780	13450	0.68	1804	18576	12632	0.68	1886	17544	11930	0.68	1968
86	79	20812	11655	0.56	1870	19608	10980	0.56	1952	18404	10306	0.56	2034
88	64	16856	16856	1.00	1607	15480	15480	1.00	1706	14276	14276	1.00	1771
88	68	17716	17007	0.96	1673	16512	15852	0.96	1755	15308	14696	0.96	1853
88	72	18748	15748	0.84	1738	17544	14737	0.84	1837	16340	13726	0.84	1902
88	75	19780	14242	0.72	1804	18576	13375	0.72	1886	17544	12632	0.72	1968
88	79	20812	12487	0.60	1870	19608	11765	0.60	1952	18404	11042	0.60	2034
90	64	16856	16856	1.00	1607	15480	15480	1.00	1706	14276	14276	1.00	1771
90	68	17716	17716	1.00	1673	16512	16512	1.00	1755	15308	15308	1.00	1853
90	72	18748	16498	0.88	1738	17544	15439	0.88	1837	16340	14379	0.88	1902
90	75	19780	15033	0.76	1804	18576	14118	0.76	1886	17544	13333	0.76	1968
90	79	20812	13320	0.64	1870	19608	12549	0.64	1952	18404	11779	0.64	2034

NOTE CA: Capacity (Btu/h) SHF: Sensible heat factor DB: Dry-bulb temperature
SHC: Sensible heat capacity (Btu/h) P.C. : Power consumption (W) WB: Wet-bulb temperature

MUZ-HM24NA

CAPACITY (Btu/h): 22500 INPUT (W): 2630 SHF: 0.89

INDOOR DB (°F)	INDOOR WB (°F)	OUTDOOR DB (°F)															
		70				77				81				86			
		CA	SHC	SHF	P.C.	CA	SHC	SHF	P.C.	CA	SHC	SHF	P.C.	CA	SHC	SHF	P.C.
70	64	26438	18771	0.71	2104	25313	17972	0.71	2209	24300	17253	0.71	2314	23400	16614	0.71	2420
70	68	27563	16262	0.59	2209	26438	15598	0.59	2341	25650	15134	0.59	2393	24750	14603	0.59	2499
72	64	26438	19828	0.75	2104	25313	18984	0.75	2209	24300	18225	0.75	2314	23400	17550	0.75	2420
72	68	27563	17364	0.63	2209	26438	16656	0.63	2341	25650	16160	0.63	2393	24750	15593	0.63	2499
72	72	28688	14631	0.51	2288	27675	14114	0.51	2433	27000	13770	0.51	2499	25875	13196	0.51	2604
73	64	26438	20886	0.79	2104	25313	19997	0.79	2209	24300	19197	0.79	2314	23400	18486	0.79	2420
73	68	27563	18467	0.67	2209	26438	17713	0.67	2341	25650	17186	0.67	2393	24750	16583	0.67	2499
73	72	28688	15778	0.55	2288	27675	15221	0.55	2433	27000	14850	0.55	2499	25875	14231	0.55	2604
75	64	26438	21943	0.83	2104	25313	21009	0.83	2209	24300	20169	0.83	2314	23400	19422	0.83	2420
75	68	27563	19569	0.71	2209	26438	18771	0.71	2341	25650	18212	0.71	2393	24750	17573	0.71	2499
75	72	28688	16926	0.59	2288	27675	16328	0.59	2433	27000	15930	0.59	2499	25875	15266	0.59	2604
75	75	30150	14171	0.47	2393	29025	13642	0.47	2525	28350	13325	0.47	2604	27450	12902	0.47	2735
77	64	26438	23001	0.87	2104	25313	22022	0.87	2209	24300	21141	0.87	2314	23400	20358	0.87	2420
77	68	27563	20672	0.75	2209	26438	19828	0.75	2341	25650	19238	0.75	2393	24750	18563	0.75	2499
77	72	28688	18073	0.63	2288	27675	17435	0.63	2433	27000	17010	0.63	2499	25875	16301	0.63	2604
77	75	30150	15377	0.51	2393	29025	14803	0.51	2525	28350	14459	0.51	2604	27450	14000	0.51	2735
79	64	26438	24058	0.91	2104	25313	23034	0.91	2209	24300	22113	0.91	2314	23400	21294	0.91	2420
79	68	27563	21774	0.79	2209	26438	20886	0.79	2341	25650	20264	0.79	2393	24750	19553	0.79	2499
79	72	28688	19221	0.67	2288	27675	18542	0.67	2433	27000	18090	0.67	2499	25875	17336	0.67	2604
79	75	30150	16583	0.55	2393	29025	15964	0.55	2525	28350	15593	0.55	2604	27450	15098	0.55	2735
79	79	31050	13352	0.43	2525	30150	12965	0.43	2656	29700	12771	0.43	2735	28800	12384	0.43	2814
81	64	26438	25116	0.95	2104	25313	24047	0.95	2209	24300	23085	0.95	2314	23400	22230	0.95	2420
81	68	27563	22877	0.83	2209	26438	21943	0.83	2341	25650	21290	0.83	2393	24750	20543	0.83	2499
81	72	28688	20368	0.71	2288	27675	19649	0.71	2433	27000	19170	0.71	2499	25875	18371	0.71	2604
81	75	30150	17789	0.59	2393	29025	17125	0.59	2525	28350	16727	0.59	2604	27450	16196	0.59	2735
81	79	31050	14594	0.47	2525	30150	14171	0.47	2656	29700	13959	0.47	2735	28800	13536	0.47	2814
82	64	26438	26173	0.99	2104	25313	25059	0.99	2209	24300	24057	0.99	2314	23400	23166	0.99	2420
82	68	27563	23979	0.87	2209	26438	23001	0.87	2341	25650	22316	0.87	2393	24750	21533	0.87	2499
82	72	28688	21516	0.75	2288	27675	20756	0.75	2433	27000	20250	0.75	2499	25875	19406	0.75	2604
82	75	30150	18995	0.63	2393	29025	18286	0.63	2525	28350	17861	0.63	2604	27450	17294	0.63	2735
82	79	31050	15836	0.51	2525	30150	15377	0.51	2656	29700	15147	0.51	2735	28800	14688	0.51	2814
84	64	26438	26438	1.00	2104	25313	25313	1.00	2209	24300	24300	1.00	2314	23400	23400	1.00	2420
84	68	27563	25082	0.91	2209	26438	24058	0.91	2341	25650	23342	0.91	2393	24750	22523	0.91	2499
84	72	28688	22663	0.79	2288	27675	21863	0.79	2433	27000	21330	0.79	2499	25875	20441	0.79	2604
84	75	30150	20201	0.67	2393	29025	19447	0.67	2525	28350	18995	0.67	2604	27450	18392	0.67	2735
84	79	31050	17078	0.55	2525	30150	16583	0.55	2656	29700	16335	0.55	2735	28800	15840	0.55	2814
86	64	26438	26438	1.00	2104	25313	25313	1.00	2209	24300	24300	1.00	2314	23400	23400	1.00	2420
86	68	27563	26184	0.95	2209	26438	25116	0.95	2341	25650	24368	0.95	2393	24750	23513	0.95	2499
86	72	28688	23811	0.83	2288	27675	22970	0.83	2433	27000	22410	0.83	2499	25875	21476	0.83	2604
86	75	30150	21407	0.71	2393	29025	20608	0.71	2525	28350	20129	0.71	2604	27450	19490	0.71	2735
86	79	31050	18320	0.59	2525	30150	17789	0.59	2656	29700	17523	0.59	2735	28800	16992	0.59	2814
88	64	26438	26438	1.00	2104	25313	25313	1.00	2209	24300	24300	1.00	2314	23400	23400	1.00	2420
88	68	27563	27287	0.99	2209	26438	26173	0.99	2341	25650	25394	0.99	2393	24750	24503	0.99	2499
88	72	28688	24958	0.87	2288	27675	24077	0.87	2433	27000	23490	0.87	2499	25875	22511	0.87	2604
88	75	30150	22613	0.75	2393	29025	21769	0.75	2525	28350	21263	0.75	2604	27450	20588	0.75	2735
88	79	31050	19562	0.63	2525	30150	18995	0.63	2656	29700	18711	0.63	2735	28800	18144	0.63	2814
90	64	26438	26438	1.00	2104	25313	25313	1.00	2209	24300	24300	1.00	2314	23400	23400	1.00	2420
90	68	27563	27563	1.00	2209	26438	26438	1.00	2341	25650	25650	1.00	2393	24750	24750	1.00	2499
90	72	28688	26106	0.91	2288	27675	25184	0.91	2433	27000	24570	0.91	2499	25875	23546	0.91	2604
90	75	30150	23819	0.79	2393	29025	22930	0.79	2525	28350	22397	0.79	2604	27450	21686	0.79	2735
90	79	31050	20804	0.67	2525	30150	20201	0.67	2656	29700	19899	0.67	2735	28800	19296	0.67	2814

NOTE CA: Capacity (Btu/h) SHF: Sensible heat factor DB: Dry-bulb temperature
SHC: Sensible heat capacity (Btu/h) P.C. : Power consumption (W) WB: Wet-bulb temperature

MUZ-HM24NA

CAPACITY (Btu/h): 22500 INPUT (W): 2630 SHF: 0.89

INDOOR DB (°F)	INDOOR WB (°F)	OUTDOOR DB (°F)											
		95				104				115			
		CA	SHC	SHF	P.C.	CA	SHC	SHF	P.C.	CA	SHC	SHF	P.C.
70	64	22050	15656	0.71	2577	20250	14378	0.71	2735	18675	13259	0.71	2840
70	68	23175	13673	0.59	2683	21600	12744	0.59	2814	20025	11815	0.59	2972
72	64	22050	16538	0.75	2577	20250	15188	0.75	2735	18675	14006	0.75	2840
72	68	23175	14600	0.63	2683	21600	13608	0.63	2814	20025	12616	0.63	2972
72	72	24525	12508	0.51	2788	22950	11705	0.51	2946	21375	10901	0.51	3051
73	64	22050	17420	0.79	2577	20250	15998	0.79	2735	18675	14753	0.79	2840
73	68	23175	15527	0.67	2683	21600	14472	0.67	2814	20025	13417	0.67	2972
73	72	24525	13489	0.55	2788	22950	12623	0.55	2946	21375	11756	0.55	3051
75	64	22050	18302	0.83	2577	20250	16808	0.83	2735	18675	15500	0.83	2840
75	68	23175	16454	0.71	2683	21600	15336	0.71	2814	20025	14218	0.71	2972
75	72	24525	14470	0.59	2788	22950	13541	0.59	2946	21375	12611	0.59	3051
75	75	25875	12161	0.47	2893	24300	11421	0.47	3025	22950	10787	0.47	3156
77	64	22050	19184	0.87	2577	20250	17618	0.87	2735	18675	16247	0.87	2840
77	68	23175	17381	0.75	2683	21600	16200	0.75	2814	20025	15019	0.75	2972
77	72	24525	15451	0.63	2788	22950	14459	0.63	2946	21375	13466	0.63	3051
77	75	25875	13196	0.51	2893	24300	12393	0.51	3025	22950	11705	0.51	3156
79	64	22050	20066	0.91	2577	20250	18428	0.91	2735	18675	16994	0.91	2840
79	68	23175	18308	0.79	2683	21600	17064	0.79	2814	20025	15820	0.79	2972
79	72	24525	16432	0.67	2788	22950	15377	0.67	2946	21375	14321	0.67	3051
79	75	25875	14231	0.55	2893	24300	13365	0.55	3025	22950	12623	0.55	3156
79	79	27225	11707	0.43	2998	25650	11030	0.43	3130	24075	10352	0.43	3261
81	64	22050	20948	0.95	2577	20250	19238	0.95	2735	18675	17741	0.95	2840
81	68	23175	19235	0.83	2683	21600	17928	0.83	2814	20025	16621	0.83	2972
81	72	24525	17413	0.71	2788	22950	16295	0.71	2946	21375	15176	0.71	3051
81	75	25875	15266	0.59	2893	24300	14337	0.59	3025	22950	13541	0.59	3156
81	79	27225	12796	0.47	2998	25650	12056	0.47	3130	24075	11315	0.47	3261
82	64	22050	21830	0.99	2577	20250	20048	0.99	2735	18675	18488	0.99	2840
82	68	23175	20162	0.87	2683	21600	18792	0.87	2814	20025	17422	0.87	2972
82	72	24525	18394	0.75	2788	22950	17213	0.75	2946	21375	16031	0.75	3051
82	75	25875	16301	0.63	2893	24300	15309	0.63	3025	22950	14459	0.63	3156
82	79	27225	13885	0.51	2998	25650	13082	0.51	3130	24075	12278	0.51	3261
84	64	22050	22050	1.00	2577	20250	20250	1.00	2735	18675	18675	1.00	2840
84	68	23175	21089	0.91	2683	21600	19656	0.91	2814	20025	18223	0.91	2972
84	72	24525	19375	0.79	2788	22950	18131	0.79	2946	21375	16886	0.79	3051
84	75	25875	17336	0.67	2893	24300	16281	0.67	3025	22950	15377	0.67	3156
84	79	27225	14974	0.55	2998	25650	14108	0.55	3130	24075	13241	0.55	3261
86	64	22050	22050	1.00	2577	20250	20250	1.00	2735	18675	18675	1.00	2840
86	68	23175	22016	0.95	2683	21600	20520	0.95	2814	20025	19024	0.95	2972
86	72	24525	20356	0.83	2788	22950	19049	0.83	2946	21375	17741	0.83	3051
86	75	25875	18371	0.71	2893	24300	17253	0.71	3025	22950	16295	0.71	3156
86	79	27225	16063	0.59	2998	25650	15134	0.59	3130	24075	14204	0.59	3261
88	64	22050	22050	1.00	2577	20250	20250	1.00	2735	18675	18675	1.00	2840
88	68	23175	22943	0.99	2683	21600	21384	0.99	2814	20025	19825	0.99	2972
88	72	24525	21337	0.87	2788	22950	19967	0.87	2946	21375	18596	0.87	3051
88	75	25875	19406	0.75	2893	24300	18225	0.75	3025	22950	17213	0.75	3156
88	79	27225	17152	0.63	2998	25650	16160	0.63	3130	24075	15167	0.63	3261
90	64	22050	22050	1.00	2577	20250	20250	1.00	2735	18675	18675	1.00	2840
90	68	23175	23175	1.00	2683	21600	21600	1.00	2814	20025	20025	1.00	2972
90	72	24525	22318	0.91	2788	22950	20885	0.91	2946	21375	19451	0.91	3051
90	75	25875	20441	0.79	2893	24300	19197	0.79	3025	22950	18131	0.79	3156
90	79	27225	18241	0.67	2998	25650	17186	0.67	3130	24075	16130	0.67	3261

NOTE CA: Capacity (Btu/h) SHF: Sensible heat factor DB: Dry-bulb temperature
SHC: Sensible heat capacity (Btu/h) P.C. : Power consumption (W) WB: Wet-bulb temperature

MUZ-D30NA

CAPACITY (Btu/h): 30700 INPUT: 3850 (W) SHF: 0.64

Indoor intake air DB(ºF)	Indoor intake air WB(ºF)	Outdoor intake air DB(ºF)															
		70				77				81				86			
		CA	SHC	SHF	P.C.	CA	SHC	SHF	P.C.	CA	SHC	SHF	P.C.	CA	SHC	SHF	P.C.
70	64	36073	16593	0.46	3080	34538	15887	0.46	3234	33156	15252	0.46	3388	31928	14687	0.46	3542
70	68	37608	12787	0.34	3234	36073	12265	0.34	3427	34998	11899	0.34	3504	33770	11482	0.34	3658
72	64	36073	18036	0.50	3080	34538	17269	0.50	3234	33156	16578	0.50	3388	31928	15964	0.50	3542
72	68	37608	14291	0.38	3234	36073	13708	0.38	3427	34998	13299	0.38	3504	33770	12833	0.38	3658
72	72	39143	10177	0.26	3350	37761	9818	0.26	3561	36840	9578	0.26	3658	35305	9179	0.26	3812
73	64	36073	19479	0.54	3080	34538	18650	0.54	3234	33156	17904	0.54	3388	31928	17241	0.54	3542
73	68	37608	15795	0.42	3234	36073	15150	0.42	3427	34998	14699	0.42	3504	33770	14183	0.42	3658
73	72	39143	11743	0.30	3350	37761	11328	0.30	3561	36840	11052	0.30	3658	35305	10592	0.30	3812
75	64	36073	20922	0.58	3080	34538	20032	0.58	3234	33156	19230	0.58	3388	31928	18518	0.58	3542
75	68	37608	17299	0.46	3234	36073	16593	0.46	3427	34998	16099	0.46	3504	33770	15534	0.46	3658
75	72	39143	13308	0.34	3350	37761	12839	0.34	3561	36840	12526	0.34	3658	35305	12004	0.34	3812
75	75	41138	9050	0.22	3504	39603	8713	0.22	3696	38682	8510	0.22	3812	37454	8240	0.22	4004
77	64	36073	22365	0.62	3080	34538	21413	0.62	3234	33156	20557	0.62	3388	31928	19795	0.62	3542
77	68	37608	18804	0.50	3234	36073	18036	0.50	3427	34998	17499	0.50	3504	33770	16885	0.50	3658
77	72	39143	14874	0.38	3350	37761	14349	0.38	3561	36840	13999	0.38	3658	35305	13416	0.38	3812
77	75	41138	10696	0.26	3504	39603	10297	0.26	3696	38682	10057	0.26	3812	37454	9738	0.26	4004
79	64	36073	23808	0.66	3080	34538	22795	0.66	3234	33156	21883	0.66	3388	31928	21072	0.66	3542
79	68	37608	20308	0.54	3234	36073	19479	0.54	3427	34998	18899	0.54	3504	33770	18236	0.54	3658
79	72	39143	16440	0.42	3350	37761	15860	0.42	3561	36840	15473	0.42	3658	35305	14828	0.42	3812
79	75	41138	12341	0.30	3504	39603	11881	0.30	3696	38682	11605	0.30	3812	37454	11236	0.30	4004
79	79	42366	7626	0.18	3696	41138	7405	0.18	3889	40524	7294	0.18	4004	39296	7073	0.18	4120
81	64	36073	25251	0.70	3080	34538	24176	0.70	3234	33156	23209	0.70	3388	31928	22350	0.70	3542
81	68	37608	21812	0.58	3234	36073	20922	0.58	3427	34998	20299	0.58	3504	33770	19587	0.58	3658
81	72	39143	18006	0.46	3350	37761	17370	0.46	3561	36840	16946	0.46	3658	35305	16240	0.46	3812
81	75	41138	13987	0.34	3504	39603	13465	0.34	3696	38682	13152	0.34	3812	37454	12734	0.34	4004
81	79	42366	9321	0.22	3696	41138	9050	0.22	3889	40524	8915	0.22	4004	39296	8645	0.22	4120
82	64	36073	26694	0.74	3080	34538	25558	0.74	3234	33156	24535	0.74	3388	31928	23627	0.74	3542
82	68	37608	23317	0.62	3234	36073	22365	0.62	3427	34998	21699	0.62	3504	33770	20937	0.62	3658
82	72	39143	19571	0.50	3350	37761	18881	0.50	3561	36840	18420	0.50	3658	35305	17653	0.50	3812
82	75	41138	15632	0.38	3504	39603	15049	0.38	3696	38682	14699	0.38	3812	37454	14233	0.38	4004
82	79	42366	11015	0.26	3696	41138	10696	0.26	3889	40524	10536	0.26	4004	39296	10217	0.26	4120
84	64	36073	28137	0.78	3080	34538	26939	0.78	3234	33156	25862	0.78	3388	31928	24904	0.78	3542
84	68	37608	24821	0.66	3234	36073	23808	0.66	3427	34998	23099	0.66	3504	33770	22288	0.66	3658
84	72	39143	21137	0.54	3350	37761	20391	0.54	3561	36840	19894	0.54	3658	35305	19065	0.54	3812
84	75	41138	17278	0.42	3504	39603	16633	0.42	3696	38682	16246	0.42	3812	37454	15731	0.42	4004
84	79	42366	12710	0.30	3696	41138	12341	0.30	3889	40524	12157	0.30	4004	39296	11789	0.30	4120
86	64	36073	29579	0.82	3080	34538	28321	0.82	3234	33156	27188	0.82	3388	31928	26181	0.82	3542
86	68	37608	26325	0.70	3234	36073	25251	0.70	3427	34998	24499	0.70	3504	33770	23639	0.70	3658
86	72	39143	22703	0.58	3350	37761	21901	0.58	3561	36840	21367	0.58	3658	35305	20477	0.58	3812
86	75	41138	18923	0.46	3504	39603	18217	0.46	3696	38682	17794	0.46	3812	37454	17229	0.46	4004
86	79	42366	14404	0.34	3696	41138	13987	0.34	3889	40524	13778	0.34	4004	39296	13361	0.34	4120
88	64	36073	31022	0.86	3080	34538	29702	0.86	3234	33156	28514	0.86	3388	31928	27458	0.86	3542
88	68	37608	27830	0.74	3234	36073	26694	0.74	3427	34998	25899	0.74	3504	33770	24990	0.74	3658
88	72	39143	24268	0.62	3350	37761	23412	0.62	3561	36840	22841	0.62	3658	35305	21889	0.62	3812
88	75	41138	20569	0.50	3504	39603	19802	0.50	3696	38682	19341	0.50	3812	37454	18727	0.50	4004
88	79	42366	16099	0.38	3696	41138	15632	0.38	3889	40524	15399	0.38	4004	39296	14932	0.38	4120
90	64	36073	32465	0.90	3080	34538	31084	0.90	3234	33156	29840	0.90	3388	31928	28735	0.90	3542
90	68	37608	29334	0.78	3234	36073	28137	0.78	3427	34998	27298	0.78	3504	33770	26341	0.78	3658
90	72	39143	25834	0.66	3350	37761	24922	0.66	3561	36840	24314	0.66	3658	35305	23301	0.66	3812
90	75	41138	22215	0.54	3504	39603	21386	0.54	3696	38682	20888	0.54	3812	37454	20225	0.54	4004
90	79	42366	17794	0.42	3696	41138	17278	0.42	3889	40524	17020	0.42	4004	39296	16504	0.42	4120

NOTE CA: Capacity (Btu/h) SHF: Sensible heat factor DB: Dry-bulb temperature
SHC: Sensible heat capacity (Btu/h) P.C. : Power consumption (W) WB: Wet-bulb temperature

MUZ-D30NA

CAPACITY (Btu/h): 30700 INPUT: 3850 (W) SHF: 0.64

Indoor intake air DB(ºF)	Indoor intake air WB(ºF)	Outdoor intake air DB(ºF)											
		95				104				115			
		CA	SHC	SHF	P.C.	CA	SHC	SHF	P.C.	CA	SHC	SHF	P.C.
70	64	30086	13840	0.46	3773	27630	12710	0.46	4004	25481	11721	0.46	4158
70	68	31621	10751	0.34	3927	29472	10020	0.34	4120	27323	9290	0.34	4351
72	64	30086	15043	0.50	3773	27630	13815	0.50	4004	25481	12741	0.50	4158
72	68	31621	12016	0.38	3927	29472	11199	0.38	4120	27323	10383	0.38	4351
72	72	33463	8700	0.26	4081	31314	8142	0.26	4312	29165	7583	0.26	4466
73	64	30086	16246	0.54	3773	27630	14920	0.54	4004	25481	13760	0.54	4158
73	68	31621	13281	0.42	3927	29472	12378	0.42	4120	27323	11476	0.42	4351
73	72	33463	10039	0.30	4081	31314	9394	0.30	4312	29165	8750	0.30	4466
75	64	30086	17450	0.58	3773	27630	16025	0.58	4004	25481	14779	0.58	4158
75	68	31621	14546	0.46	3927	29472	13557	0.46	4120	27323	12569	0.46	4351
75	72	33463	11377	0.34	4081	31314	10647	0.34	4312	29165	9916	0.34	4466
75	75	35305	7767	0.22	4235	33156	7294	0.22	4428	31314	6889	0.22	4620
77	64	30086	18653	0.62	3773	27630	17131	0.62	4004	25481	15798	0.62	4158
77	68	31621	15811	0.50	3927	29472	14736	0.50	4120	27323	13662	0.50	4351
77	72	33463	12716	0.38	4081	31314	11899	0.38	4312	29165	11083	0.38	4466
77	75	35305	9179	0.26	4235	33156	8621	0.26	4428	31314	8142	0.26	4620
79	64	30086	19857	0.66	3773	27630	18236	0.66	4004	25481	16817	0.66	4158
79	68	31621	17075	0.54	3927	29472	15915	0.54	4120	27323	14754	0.54	4351
79	72	33463	14054	0.42	4081	31314	13152	0.42	4312	29165	12249	0.42	4466
79	75	35305	10592	0.30	4235	33156	9947	0.30	4428	31314	9394	0.30	4620
79	79	37147	6686	0.18	4389	34998	6300	0.18	4582	32849	5913	0.18	4774
81	64	30086	21060	0.70	3773	27630	19341	0.70	4004	25481	17837	0.70	4158
81	68	31621	18340	0.58	3927	29472	17094	0.58	4120	27323	15847	0.58	4351
81	72	33463	15393	0.46	4081	31314	14404	0.46	4312	29165	13416	0.46	4466
81	75	35305	12004	0.34	4235	33156	11273	0.34	4428	31314	10647	0.34	4620
81	79	37147	8172	0.22	4389	34998	7700	0.22	4582	32849	7227	0.22	4774
82	64	30086	22264	0.74	3773	27630	20446	0.74	4004	25481	18856	0.74	4158
82	68	31621	19605	0.62	3927	29472	18273	0.62	4120	27323	16940	0.62	4351
82	72	33463	16732	0.50	4081	31314	15657	0.50	4312	29165	14583	0.50	4466
82	75	35305	13416	0.38	4235	33156	12599	0.38	4428	31314	11899	0.38	4620
82	79	37147	9658	0.26	4389	34998	9099	0.26	4582	32849	8541	0.26	4774
84	64	30086	23467	0.78	3773	27630	21551	0.78	4004	25481	19875	0.78	4158
84	68	31621	20870	0.66	3927	29472	19452	0.66	4120	27323	18033	0.66	4351
84	72	33463	18070	0.54	4081	31314	16910	0.54	4312	29165	15749	0.54	4466
84	75	35305	14828	0.42	4235	33156	13926	0.42	4428	31314	13152	0.42	4620
84	79	37147	11144	0.30	4389	34998	10499	0.30	4582	32849	9855	0.30	4774
86	64	30086	24671	0.82	3773	27630	22657	0.82	4004	25481	20894	0.82	4158
86	68	31621	22135	0.70	3927	29472	20630	0.70	4120	27323	19126	0.70	4351
86	72	33463	19409	0.58	4081	31314	18162	0.58	4312	29165	16916	0.58	4466
86	75	35305	16240	0.46	4235	33156	15252	0.46	4428	31314	14404	0.46	4620
86	79	37147	12630	0.34	4389	34998	11899	0.34	4582	32849	11169	0.34	4774
88	64	30086	25874	0.86	3773	27630	23762	0.86	4004	25481	21914	0.86	4158
88	68	31621	23400	0.74	3927	29472	21809	0.74	4120	27323	20219	0.74	4351
88	72	33463	20747	0.62	4081	31314	19415	0.62	4312	29165	18082	0.62	4466
88	75	35305	17653	0.50	4235	33156	16578	0.50	4428	31314	15657	0.50	4620
88	79	37147	14116	0.38	4389	34998	13299	0.38	4582	32849	12483	0.38	4774
90	64	30086	27077	0.90	3773	27630	24867	0.90	4004	25481	22933	0.90	4158
90	68	31621	24664	0.78	3927	29472	22988	0.78	4120	27323	21312	0.78	4351
90	72	33463	22086	0.66	4081	31314	20667	0.66	4312	29165	19249	0.66	4466
90	75	35305	19065	0.54	4235	33156	17904	0.54	4428	31314	16910	0.54	4620
90	79	37147	15602	0.42	4389	34998	14699	0.42	4582	32849	13797	0.42	4774

NOTE CA: Capacity (Btu/h) SHF: Sensible heat factor DB: Dry-bulb temperature
SHC: Sensible heat capacity (Btu/h) P.C. : Power consumption (W) WB: Wet-bulb temperature

MUY-D30NA

CAPACITY (Btu/h): 30700 INPUT: 3380 (W) SHF: 0.64

Indoor intake air DB(ºF)	Indoor intake air WB(ºF)	Outdoor intake air DB(ºF)															
		70				77				81				86			
		CA	SHC	SHF	P.C.	CA	SHC	SHF	P.C.	CA	SHC	SHF	P.C.	CA	SHC	SHF	P.C.
70	64	36073	16593	0.46	2704	34538	15887	0.46	2839	33156	15252	0.46	2974	31928	14687	0.46	3110
70	68	37608	12787	0.34	2839	36073	12265	0.34	3008	34998	11899	0.34	3076	33770	11482	0.34	3211
72	64	36073	18036	0.50	2704	34538	17269	0.50	2839	33156	16578	0.50	2974	31928	15964	0.50	3110
72	68	37608	14291	0.38	2839	36073	13708	0.38	3008	34998	13299	0.38	3076	33770	12833	0.38	3211
72	72	39143	10177	0.26	2941	37761	9818	0.26	3127	36840	9578	0.26	3211	35305	9179	0.26	3346
73	64	36073	19479	0.54	2704	34538	18650	0.54	2839	33156	17904	0.54	2974	31928	17241	0.54	3110
73	68	37608	15795	0.42	2839	36073	15150	0.42	3008	34998	14699	0.42	3076	33770	14183	0.42	3211
73	72	39143	11743	0.30	2941	37761	11328	0.30	3127	36840	11052	0.30	3211	35305	10592	0.30	3346
75	64	36073	20922	0.58	2704	34538	20032	0.58	2839	33156	19230	0.58	2974	31928	18518	0.58	3110
75	68	37608	17299	0.46	2839	36073	16593	0.46	3008	34998	16099	0.46	3076	33770	15534	0.46	3211
75	72	39143	13308	0.34	2941	37761	12839	0.34	3127	36840	12526	0.34	3211	35305	12004	0.34	3346
75	75	41138	9050	0.22	3076	39603	8713	0.22	3245	38682	8510	0.22	3346	37454	8240	0.22	3515
77	64	36073	22365	0.62	2704	34538	21413	0.62	2839	33156	20557	0.62	2974	31928	19795	0.62	3110
77	68	37608	18804	0.50	2839	36073	18036	0.50	3008	34998	17499	0.50	3076	33770	16885	0.50	3211
77	72	39143	14874	0.38	2941	37761	14349	0.38	3127	36840	13999	0.38	3211	35305	13416	0.38	3346
77	75	41138	10696	0.26	3076	39603	10297	0.26	3245	38682	10057	0.26	3346	37454	9738	0.26	3515
79	64	36073	23808	0.66	2704	34538	22795	0.66	2839	33156	21883	0.66	2974	31928	21072	0.66	3110
79	68	37608	20308	0.54	2839	36073	19479	0.54	3008	34998	18899	0.54	3076	33770	18236	0.54	3211
79	72	39143	16440	0.42	2941	37761	15860	0.42	3127	36840	15473	0.42	3211	35305	14828	0.42	3346
79	75	41138	12341	0.30	3076	39603	11881	0.30	3245	38682	11605	0.30	3346	37454	11236	0.30	3515
79	79	42366	7626	0.18	3245	41138	7405	0.18	3414	40524	7294	0.18	3515	39296	7073	0.18	3617
81	64	36073	25251	0.70	2704	34538	24176	0.70	2839	33156	23209	0.70	2974	31928	22350	0.70	3110
81	68	37608	21812	0.58	2839	36073	20922	0.58	3008	34998	20299	0.58	3076	33770	19587	0.58	3211
81	72	39143	18006	0.46	2941	37761	17370	0.46	3127	36840	16946	0.46	3211	35305	16240	0.46	3346
81	75	41138	13987	0.34	3076	39603	13465	0.34	3245	38682	13152	0.34	3346	37454	12734	0.34	3515
81	79	42366	9321	0.22	3245	41138	9050	0.22	3414	40524	8915	0.22	3515	39296	8645	0.22	3617
82	64	36073	26694	0.74	2704	34538	25558	0.74	2839	33156	24535	0.74	2974	31928	23627	0.74	3110
82	68	37608	23317	0.62	2839	36073	22365	0.62	3008	34998	21699	0.62	3076	33770	20937	0.62	3211
82	72	39143	19571	0.50	2941	37761	18881	0.50	3127	36840	18420	0.50	3211	35305	17653	0.50	3346
82	75	41138	15632	0.38	3076	39603	15049	0.38	3245	38682	14699	0.38	3346	37454	14233	0.38	3515
82	79	42366	11015	0.26	3245	41138	10696	0.26	3414	40524	10536	0.26	3515	39296	10217	0.26	3617
84	64	36073	28137	0.78	2704	34538	26939	0.78	2839	33156	25862	0.78	2974	31928	24904	0.78	3110
84	68	37608	24821	0.66	2839	36073	23808	0.66	3008	34998	23099	0.66	3076	33770	22288	0.66	3211
84	72	39143	21137	0.54	2941	37761	20391	0.54	3127	36840	19894	0.54	3211	35305	19065	0.54	3346
84	75	41138	17278	0.42	3076	39603	16633	0.42	3245	38682	16246	0.42	3346	37454	15731	0.42	3515
84	79	42366	12710	0.30	3245	41138	12341	0.30	3414	40524	12157	0.30	3515	39296	11789	0.30	3617
86	64	36073	29579	0.82	2704	34538	28321	0.82	2839	33156	27188	0.82	2974	31928	26181	0.82	3110
86	68	37608	26325	0.70	2839	36073	25251	0.70	3008	34998	24499	0.70	3076	33770	23639	0.70	3211
86	72	39143	22703	0.58	2941	37761	21901	0.58	3127	36840	21367	0.58	3211	35305	20477	0.58	3346
86	75	41138	18923	0.46	3076	39603	18217	0.46	3245	38682	17794	0.46	3346	37454	17229	0.46	3515
86	79	42366	14404	0.34	3245	41138	13987	0.34	3414	40524	13778	0.34	3515	39296	13361	0.34	3617
88	64	36073	31022	0.86	2704	34538	29702	0.86	2839	33156	28514	0.86	2974	31928	27458	0.86	3110
88	68	37608	27830	0.74	2839	36073	26694	0.74	3008	34998	25899	0.74	3076	33770	24990	0.74	3211
88	72	39143	24268	0.62	2941	37761	23412	0.62	3127	36840	22841	0.62	3211	35305	21889	0.62	3346
88	75	41138	20569	0.50	3076	39603	19802	0.50	3245	38682	19341	0.50	3346	37454	18727	0.50	3515
88	79	42366	16099	0.38	3245	41138	15632	0.38	3414	40524	15399	0.38	3515	39296	14932	0.38	3617
90	64	36073	32465	0.90	2704	34538	31084	0.90	2839	33156	29840	0.90	2974	31928	28735	0.90	3110
90	68	37608	29334	0.78	2839	36073	28137	0.78	3008	34998	27298	0.78	3076	33770	26341	0.78	3211
90	72	39143	25834	0.66	2941	37761	24922	0.66	3127	36840	24314	0.66	3211	35305	23301	0.66	3346
90	75	41138	22215	0.54	3076	39603	21386	0.54	3245	38682	20888	0.54	3346	37454	20225	0.54	3515
90	79	42366	17794	0.42	3245	41138	17278	0.42	3414	40524	17020	0.42	3515	39296	16504	0.42	3617

NOTE CA: Capacity (Btu/h) SHF: Sensible heat factor DB: Dry-bulb temperature
SHC: Sensible heat capacity (Btu/h) P.C. : Power consumption (W) WB: Wet-bulb temperature

MUY-D30NA

CAPACITY (Btu/h): 30700 INPUT: 3380 (W) SHF: 0.64

Indoor intake air DB(ºF)	Indoor intake air WB(ºF)	Outdoor intake air DB(ºF)											
		95				104				115			
		CA	SHC	SHF	P.C.	CA	SHC	SHF	P.C.	CA	SHC	SHF	P.C.
70	64	30086	13840	0.46	3312	27630	12710	0.46	3515	25481	11721	0.46	3650
70	68	31621	10751	0.34	3448	29472	10020	0.34	3617	27323	9290	0.34	3819
72	64	30086	15043	0.50	3312	27630	13815	0.50	3515	25481	12741	0.50	3650
72	68	31621	12016	0.38	3448	29472	11199	0.38	3617	27323	10383	0.38	3819
72	72	33463	8700	0.26	3583	31314	8142	0.26	3786	29165	7583	0.26	3921
73	64	30086	16246	0.54	3312	27630	14920	0.54	3515	25481	13760	0.54	3650
73	68	31621	13281	0.42	3448	29472	12378	0.42	3617	27323	11476	0.42	3819
73	72	33463	10039	0.30	3583	31314	9394	0.30	3786	29165	8750	0.30	3921
75	64	30086	17450	0.58	3312	27630	16025	0.58	3515	25481	14779	0.58	3650
75	68	31621	14546	0.46	3448	29472	13557	0.46	3617	27323	12569	0.46	3819
75	72	33463	11377	0.34	3583	31314	10647	0.34	3786	29165	9916	0.34	3921
75	75	35305	7767	0.22	3718	33156	7294	0.22	3887	31314	6889	0.22	4056
77	64	30086	18653	0.62	3312	27630	17131	0.62	3515	25481	15798	0.62	3650
77	68	31621	15811	0.50	3448	29472	14736	0.50	3617	27323	13662	0.50	3819
77	72	33463	12716	0.38	3583	31314	11899	0.38	3786	29165	11083	0.38	3921
77	75	35305	9179	0.26	3718	33156	8621	0.26	3887	31314	8142	0.26	4056
79	64	30086	19857	0.66	3312	27630	18236	0.66	3515	25481	16817	0.66	3650
79	68	31621	17075	0.54	3448	29472	15915	0.54	3617	27323	14754	0.54	3819
79	72	33463	14054	0.42	3583	31314	13152	0.42	3786	29165	12249	0.42	3921
79	75	35305	10592	0.30	3718	33156	9947	0.30	3887	31314	9394	0.30	4056
79	79	37147	6686	0.18	3853	34998	6300	0.18	4022	32849	5913	0.18	4191
81	64	30086	21060	0.70	3312	27630	19341	0.70	3515	25481	17837	0.70	3650
81	68	31621	18340	0.58	3448	29472	17094	0.58	3617	27323	15847	0.58	3819
81	72	33463	15393	0.46	3583	31314	14404	0.46	3786	29165	13416	0.46	3921
81	75	35305	12004	0.34	3718	33156	11273	0.34	3887	31314	10647	0.34	4056
81	79	37147	8172	0.22	3853	34998	7700	0.22	4022	32849	7227	0.22	4191
82	64	30086	22264	0.74	3312	27630	20446	0.74	3515	25481	18856	0.74	3650
82	68	31621	19605	0.62	3448	29472	18273	0.62	3617	27323	16940	0.62	3819
82	72	33463	16732	0.50	3583	31314	15657	0.50	3786	29165	14583	0.50	3921
82	75	35305	13416	0.38	3718	33156	12599	0.38	3887	31314	11899	0.38	4056
82	79	37147	9658	0.26	3853	34998	9099	0.26	4022	32849	8541	0.26	4191
84	64	30086	23467	0.78	3312	27630	21551	0.78	3515	25481	19875	0.78	3650
84	68	31621	20870	0.66	3448	29472	19452	0.66	3617	27323	18033	0.66	3819
84	72	33463	18070	0.54	3583	31314	16910	0.54	3786	29165	15749	0.54	3921
84	75	35305	14828	0.42	3718	33156	13926	0.42	3887	31314	13152	0.42	4056
84	79	37147	11144	0.30	3853	34998	10499	0.30	4022	32849	9855	0.30	4191
86	64	30086	24671	0.82	3312	27630	22657	0.82	3515	25481	20894	0.82	3650
86	68	31621	22135	0.70	3448	29472	20630	0.70	3617	27323	19126	0.70	3819
86	72	33463	19409	0.58	3583	31314	18162	0.58	3786	29165	16916	0.58	3921
86	75	35305	16240	0.46	3718	33156	15252	0.46	3887	31314	14404	0.46	4056
86	79	37147	12630	0.34	3853	34998	11899	0.34	4022	32849	11169	0.34	4191
88	64	30086	25874	0.86	3312	27630	23762	0.86	3515	25481	21914	0.86	3650
88	68	31621	23400	0.74	3448	29472	21809	0.74	3617	27323	20219	0.74	3819
88	72	33463	20747	0.62	3583	31314	19415	0.62	3786	29165	18082	0.62	3921
88	75	35305	17653	0.50	3718	33156	16578	0.50	3887	31314	15657	0.50	4056
88	79	37147	14116	0.38	3853	34998	13299	0.38	4022	32849	12483	0.38	4191
90	64	30086	27077	0.90	3312	27630	24867	0.90	3515	25481	22933	0.90	3650
90	68	31621	24664	0.78	3448	29472	22988	0.78	3617	27323	21312	0.78	3819
90	72	33463	22086	0.66	3583	31314	20667	0.66	3786	29165	19249	0.66	3921
90	75	35305	19065	0.54	3718	33156	17904	0.54	3887	31314	16910	0.54	4056
90	79	37147	15602	0.42	3853	34998	14699	0.42	4022	32849	13797	0.42	4191

NOTE CA: Capacity (Btu/h) SHF: Sensible heat factor DB: Dry-bulb temperature
SHC: Sensible heat capacity (Btu/h) P.C. : Power consumption (W) WB: Wet-bulb temperature

MUZ-D36NA (208V)

CAPACITY (Btu/h): 32000 INPUT: 4140 (W) SHF: 0.62

Indoor intake air DB(ºF)	Indoor intake air WB(ºF)	Outdoor intake air DB(ºF)															
		70				77				81				86			
		CA	SHC	SHF	P.C.	CA	SHC	SHF	P.C.	CA	SHC	SHF	P.C.	CA	SHC	SHF	P.C.
70	64	37600	16544	0.44	3312	36000	15840	0.44	3478	34560	15206	0.44	3643	33280	14643	0.44	3809
70	68	39200	12544	0.32	3478	37600	12032	0.32	3685	36480	11674	0.32	3767	35200	11264	0.32	3933
72	64	37600	18048	0.48	3312	36000	17280	0.48	3478	34560	16589	0.48	3643	33280	15974	0.48	3809
72	68	39200	14112	0.36	3478	37600	13536	0.36	3685	36480	13133	0.36	3767	35200	12672	0.36	3933
72	72	40800	9792	0.24	3602	39360	9446	0.24	3830	38400	9216	0.24	3933	36800	8832	0.24	4099
73	64	37600	19552	0.52	3312	36000	18720	0.52	3478	34560	17971	0.52	3643	33280	17306	0.52	3809
73	68	39200	15680	0.40	3478	37600	15040	0.40	3685	36480	14592	0.40	3767	35200	14080	0.40	3933
73	72	40800	11424	0.28	3602	39360	11021	0.28	3830	38400	10752	0.28	3933	36800	10304	0.28	4099
75	64	37600	21056	0.56	3312	36000	20160	0.56	3478	34560	19354	0.56	3643	33280	18637	0.56	3809
75	68	39200	17248	0.44	3478	37600	16544	0.44	3685	36480	16051	0.44	3767	35200	15488	0.44	3933
75	72	40800	13056	0.32	3602	39360	12595	0.32	3830	38400	12288	0.32	3933	36800	11776	0.32	4099
75	75	42880	8576	0.20	3767	41280	8256	0.20	3974	40320	8064	0.20	4099	39040	7808	0.20	4306
77	64	37600	22560	0.60	3312	36000	21600	0.60	3478	34560	20736	0.60	3643	33280	19968	0.60	3809
77	68	39200	18816	0.48	3478	37600	18048	0.48	3685	36480	17510	0.48	3767	35200	16896	0.48	3933
77	72	40800	14688	0.36	3602	39360	14170	0.36	3830	38400	13824	0.36	3933	36800	13248	0.36	4099
77	75	42880	10291	0.24	3767	41280	9907	0.24	3974	40320	9677	0.24	4099	39040	9370	0.24	4306
79	64	37600	24064	0.64	3312	36000	23040	0.64	3478	34560	22118	0.64	3643	33280	21299	0.64	3809
79	68	39200	20384	0.52	3478	37600	19552	0.52	3685	36480	18970	0.52	3767	35200	18304	0.52	3933
79	72	40800	16320	0.40	3602	39360	15744	0.40	3830	38400	15360	0.40	3933	36800	14720	0.40	4099
79	75	42880	12006	0.28	3767	41280	11558	0.28	3974	40320	11290	0.28	4099	39040	10931	0.28	4306
79	79	44160	7066	0.16	3974	42880	6861	0.16	4181	42240	6758	0.16	4306	40960	6554	0.16	4430
81	64	37600	25568	0.68	3312	36000	24480	0.68	3478	34560	23501	0.68	3643	33280	22630	0.68	3809
81	68	39200	21952	0.56	3478	37600	21056	0.56	3685	36480	20429	0.56	3767	35200	19712	0.56	3933
81	72	40800	17952	0.44	3602	39360	17318	0.44	3830	38400	16896	0.44	3933	36800	16192	0.44	4099
81	75	42880	13722	0.32	3767	41280	13210	0.32	3974	40320	12902	0.32	4099	39040	12493	0.32	4306
81	79	44160	8832	0.20	3974	42880	8576	0.20	4181	42240	8448	0.20	4306	40960	8192	0.20	4430
82	64	37600	27072	0.72	3312	36000	25920	0.72	3478	34560	24883	0.72	3643	33280	23962	0.72	3809
82	68	39200	23520	0.60	3478	37600	22560	0.60	3685	36480	21888	0.60	3767	35200	21120	0.60	3933
82	72	40800	19584	0.48	3602	39360	18893	0.48	3830	38400	18432	0.48	3933	36800	17664	0.48	4099
82	75	42880	15437	0.36	3767	41280	14861	0.36	3974	40320	14515	0.36	4099	39040	14054	0.36	4306
82	79	44160	10598	0.24	3974	42880	10291	0.24	4181	42240	10138	0.24	4306	40960	9830	0.24	4430
84	64	37600	28576	0.76	3312	36000	27360	0.76	3478	34560	26266	0.76	3643	33280	25293	0.76	3809
84	68	39200	25088	0.64	3478	37600	24064	0.64	3685	36480	23347	0.64	3767	35200	22528	0.64	3933
84	72	40800	21216	0.52	3602	39360	20467	0.52	3830	38400	19968	0.52	3933	36800	19136	0.52	4099
84	75	42880	17152	0.40	3767	41280	16512	0.40	3974	40320	16128	0.40	4099	39040	15616	0.40	4306
84	79	44160	12365	0.28	3974	42880	12006	0.28	4181	42240	11827	0.28	4306	40960	11469	0.28	4430
86	64	37600	30080	0.80	3312	36000	28800	0.80	3478	34560	27648	0.80	3643	33280	26624	0.80	3809
86	68	39200	26656	0.68	3478	37600	25568	0.68	3685	36480	24806	0.68	3767	35200	23936	0.68	3933
86	72	40800	22848	0.56	3602	39360	22042	0.56	3830	38400	21504	0.56	3933	36800	20608	0.56	4099
86	75	42880	18867	0.44	3767	41280	18163	0.44	3974	40320	17741	0.44	4099	39040	17178	0.44	4306
86	79	44160	14131	0.32	3974	42880	13722	0.32	4181	42240	13517	0.32	4306	40960	13107	0.32	4430
88	64	37600	31584	0.84	3312	36000	30240	0.84	3478	34560	29030	0.84	3643	33280	27955	0.84	3809
88	68	39200	28224	0.72	3478	37600	27072	0.72	3685	36480	26266	0.72	3767	35200	25344	0.72	3933
88	72	40800	24480	0.60	3602	39360	23616	0.60	3830	38400	23040	0.60	3933	36800	22080	0.60	4099
88	75	42880	20582	0.48	3767	41280	19814	0.48	3974	40320	19354	0.48	4099	39040	18739	0.48	4306
88	79	44160	15898	0.36	3974	42880	15437	0.36	4181	42240	15206	0.36	4306	40960	14746	0.36	4430
90	64	37600	33088	0.88	3312	36000	31680	0.88	3478	34560	30413	0.88	3643	33280	29286	0.88	3809
90	68	39200	29792	0.76	3478	37600	28576	0.76	3685	36480	27725	0.76	3767	35200	26752	0.76	3933
90	72	40800	26112	0.64	3602	39360	25190	0.64	3830	38400	24576	0.64	3933	36800	23552	0.64	4099
90	75	42880	22298	0.52	3767	41280	21466	0.52	3974	40320	20966	0.52	4099	39040	20301	0.52	4306
90	79	44160	17664	0.40	3974	42880	17152	0.40	4181	42240	16896	0.40	4306	40960	16384	0.40	4430

NOTE CA: Capacity (Btu/h) SHF: Sensible heat factor DB: Dry-bulb temperature
SHC: Sensible heat capacity (Btu/h) P.C. : Power consumption (W) WB: Wet-bulb temperature

MUZ-D36NA (208V)

CAPACITY (Btu/h): 32000 INPUT: 4140 (W) SHF: 0.62

Indoor intake air DB(ºF)	Indoor intake air WB(ºF)	Outdoor intake air DB(ºF)											
		95				104				115			
		CA	SHC	SHF	P.C.	CA	SHC	SHF	P.C.	CA	SHC	SHF	P.C.
70	64	31360	13798	0.44	4057	28800	12672	0.44	4306	26560	11686	0.44	4471
70	68	32960	10547	0.32	4223	30720	9830	0.32	4430	28480	9114	0.32	4678
72	64	31360	15053	0.48	4057	28800	13824	0.48	4306	26560	12749	0.48	4471
72	68	32960	11866	0.36	4223	30720	11059	0.36	4430	28480	10253	0.36	4678
72	72	34880	8371	0.24	4388	32640	7834	0.24	4637	30400	7296	0.24	4802
73	64	31360	16307	0.52	4057	28800	14976	0.52	4306	26560	13811	0.52	4471
73	68	32960	13184	0.40	4223	30720	12288	0.40	4430	28480	11392	0.40	4678
73	72	34880	9766	0.28	4388	32640	9139	0.28	4637	30400	8512	0.28	4802
75	64	31360	17562	0.56	4057	28800	16128	0.56	4306	26560	14874	0.56	4471
75	68	32960	14502	0.44	4223	30720	13517	0.44	4430	28480	12531	0.44	4678
75	72	34880	11162	0.32	4388	32640	10445	0.32	4637	30400	9728	0.32	4802
75	75	36800	7360	0.20	4554	34560	6912	0.20	4761	32640	6528	0.20	4968
77	64	31360	18816	0.60	4057	28800	17280	0.60	4306	26560	15936	0.6	4471
77	68	32960	15821	0.48	4223	30720	14746	0.48	4430	28480	13670	0.48	4678
77	72	34880	12557	0.36	4388	32640	11750	0.36	4637	30400	10944	0.36	4802
77	75	36800	8832	0.24	4554	34560	8294	0.24	4761	32640	7834	0.24	4968
79	64	31360	20070	0.64	4057	28800	18432	0.64	4306	26560	16998	0.64	4471
79	68	32960	17139	0.52	4223	30720	15974	0.52	4430	28480	14810	0.52	4678
79	72	34880	13952	0.40	4388	32640	13056	0.40	4637	30400	12160	0.40	4802
79	75	36800	10304	0.28	4554	34560	9677	0.28	4761	32640	9139	0.28	4968
79	79	38720	6195	0.16	4720	36480	5837	0.16	4927	34240	5478	0.16	5134
81	64	31360	21325	0.68	4057	28800	19584	0.68	4306	26560	18061	0.68	4471
81	68	32960	18458	0.56	4223	30720	17203	0.56	4430	28480	15949	0.56	4678
81	72	34880	15347	0.44	4388	32640	14362	0.44	4637	30400	13376	0.44	4802
81	75	36800	11776	0.32	4554	34560	11059	0.32	4761	32640	10445	0.32	4968
81	79	38720	7744	0.20	4720	36480	7296	0.20	4927	34240	6848	0.20	5134
82	64	31360	22579	0.72	4057	28800	20736	0.72	4306	26560	19123	0.72	4471
82	68	32960	19776	0.60	4223	30720	18432	0.60	4430	28480	17088	0.60	4678
82	72	34880	16742	0.48	4388	32640	15667	0.48	4637	30400	14592	0.48	4802
82	75	36800	13248	0.36	4554	34560	12442	0.36	4761	32640	11750	0.36	4968
82	79	38720	9293	0.24	4720	36480	8755	0.24	4927	34240	8218	0.24	5134
84	64	31360	23834	0.76	4057	28800	21888	0.76	4306	26560	20186	0.76	4471
84	68	32960	21094	0.64	4223	30720	19661	0.64	4430	28480	18227	0.64	4678
84	72	34880	18138	0.52	4388	32640	16973	0.52	4637	30400	15808	0.52	4802
84	75	36800	14720	0.40	4554	34560	13824	0.40	4761	32640	13056	0.40	4968
84	79	38720	10842	0.28	4720	36480	10214	0.28	4927	34240	9587	0.28	5134
86	64	31360	25088	0.80	4057	28800	23040	0.80	4306	26560	21248	0.80	4471
86	68	32960	22413	0.68	4223	30720	20890	0.68	4430	28480	19366	0.68	4678
86	72	34880	19533	0.56	4388	32640	18278	0.56	4637	30400	17024	0.56	4802
86	75	36800	16192	0.44	4554	34560	15206	0.44	4761	32640	14362	0.44	4968
86	79	38720	12390	0.32	4720	36480	11674	0.32	4927	34240	10957	0.32	5134
88	64	31360	26342	0.84	4057	28800	24192	0.84	4306	26560	22310	0.84	4471
88	68	32960	23731	0.72	4223	30720	22118	0.72	4430	28480	20506	0.72	4678
88	72	34880	20928	0.60	4388	32640	19584	0.60	4637	30400	18240	0.60	4802
88	75	36800	17664	0.48	4554	34560	16589	0.48	4761	32640	15667	0.48	4968
88	79	38720	13939	0.36	4720	36480	13133	0.36	4927	34240	12326	0.36	5134
90	64	31360	27597	0.88	4057	28800	25344	0.88	4306	26560	23373	0.88	4471
90	68	32960	25050	0.76	4223	30720	23347	0.76	4430	28480	21645	0.76	4678
90	72	34880	22323	0.64	4388	32640	20890	0.64	4637	30400	19456	0.64	4802
90	75	36800	19136	0.52	4554	34560	17971	0.52	4761	32640	16973	0.52	4968
90	79	38720	15488	0.40	4720	36480	14592	0.40	4927	34240	13696	0.40	5134

NOTE CA: Capacity (Btu/h) SHF: Sensible heat factor DB: Dry-bulb temperature
SHC: Sensible heat capacity (Btu/h) P.C. : Power consumption (W) WB: Wet-bulb temperature

MUZ-D36NA (230V)

CAPACITY (Btu/h): 33200 INPUT: 4360 (W) SHF: 0.62

Indoor intake air DB(ºF)	Indoor intake air WB(ºF)	Outdoor intake air DB(ºF)															
		70				77				81				86			
		CA	SHC	SHF	P.C.	CA	SHC	SHF	P.C.	CA	SHC	SHF	P.C.	CA	SHC	SHF	P.C.
70	64	39010	17164	0.44	3488	37350	16434	0.44	3662	35856	15777	0.44	3837	34528	15192	0.44	4011
70	68	40670	13014	0.32	3662	39010	12483	0.32	3880	37848	12111	0.32	3968	36520	11686	0.32	4142
72	64	39010	18725	0.48	3488	37350	17928	0.48	3662	35856	17211	0.48	3837	34528	16573	0.48	4011
72	68	40670	14641	0.36	3662	39010	14044	0.36	3880	37848	13625	0.36	3968	36520	13147	0.36	4142
72	72	42330	10159	0.24	3793	40836	9801	0.24	4033	39840	9562	0.24	4142	38180	9163	0.24	4316
73	64	39010	20285	0.52	3488	37350	19422	0.52	3662	35856	18645	0.52	3837	34528	17955	0.52	4011
73	68	40670	16268	0.40	3662	39010	15604	0.40	3880	37848	15139	0.40	3968	36520	14608	0.40	4142
73	72	42330	11852	0.28	3793	40836	11434	0.28	4033	39840	11155	0.28	4142	38180	10690	0.28	4316
75	64	39010	21846	0.56	3488	37350	20916	0.56	3662	35856	20079	0.56	3837	34528	19336	0.56	4011
75	68	40670	17895	0.44	3662	39010	17164	0.44	3880	37848	16653	0.44	3968	36520	16069	0.44	4142
75	72	42330	13546	0.32	3793	40836	13068	0.32	4033	39840	12749	0.32	4142	38180	12218	0.32	4316
75	75	44488	8898	0.20	3968	42828	8566	0.20	4186	41832	8366	0.20	4316	40504	8101	0.20	4534
77	64	39010	23406	0.60	3488	37350	22410	0.60	3662	35856	21514	0.60	3837	34528	20717	0.60	4011
77	68	40670	19522	0.48	3662	39010	18725	0.48	3880	37848	18167	0.48	3968	36520	17530	0.48	4142
77	72	42330	15239	0.36	3793	40836	14701	0.36	4033	39840	14342	0.36	4142	38180	13745	0.36	4316
77	75	44488	10677	0.24	3968	42828	10279	0.24	4186	41832	10040	0.24	4316	40504	9721	0.24	4534
79	64	39010	24966	0.64	3488	37350	23904	0.64	3662	35856	22948	0.64	3837	34528	22098	0.64	4011
79	68	40670	21148	0.52	3662	39010	20285	0.52	3880	37848	19681	0.52	3968	36520	18990	0.52	4142
79	72	42330	16932	0.40	3793	40836	16334	0.40	4033	39840	15936	0.40	4142	38180	15272	0.40	4316
79	75	44488	12457	0.28	3968	42828	11992	0.28	4186	41832	11713	0.28	4316	40504	11341	0.28	4534
79	79	45816	7331	0.16	4186	44488	7118	0.16	4404	43824	7012	0.16	4534	42496	6799	0.16	4665
81	64	39010	26527	0.68	3488	37350	25398	0.68	3662	35856	24382	0.68	3837	34528	23479	0.68	4011
81	68	40670	22775	0.56	3662	39010	21846	0.56	3880	37848	21195	0.56	3968	36520	20451	0.56	4142
81	72	42330	18625	0.44	3793	40836	17968	0.44	4033	39840	17530	0.44	4142	38180	16799	0.44	4316
81	75	44488	14236	0.32	3968	42828	13705	0.32	4186	41832	13386	0.32	4316	40504	12961	0.32	4534
81	79	45816	9163	0.20	4186	44488	8898	0.20	4404	43824	8765	0.20	4534	42496	8499	0.20	4665
82	64	39010	28087	0.72	3488	37350	26892	0.72	3662	35856	25816	0.72	3837	34528	24860	0.72	4011
82	68	40670	24402	0.60	3662	39010	23406	0.60	3880	37848	22709	0.60	3968	36520	21912	0.60	4142
82	72	42330	20318	0.48	3793	40836	19601	0.48	4033	39840	19123	0.48	4142	38180	18326	0.48	4316
82	75	44488	16016	0.36	3968	42828	15418	0.36	4186	41832	15060	0.36	4316	40504	14581	0.36	4534
82	79	45816	10996	0.24	4186	44488	10677	0.24	4404	43824	10518	0.24	4534	42496	10199	0.24	4665
84	64	39010	29648	0.76	3488	37350	28386	0.76	3662	35856	27251	0.76	3837	34528	26241	0.76	4011
84	68	40670	26029	0.64	3662	39010	24966	0.64	3880	37848	24223	0.64	3968	36520	23373	0.64	4142
84	72	42330	22012	0.52	3793	40836	21235	0.52	4033	39840	20717	0.52	4142	38180	19854	0.52	4316
84	75	44488	17795	0.40	3968	42828	17131	0.40	4186	41832	16733	0.40	4316	40504	16202	0.40	4534
84	79	45816	12828	0.28	4186	44488	12457	0.28	4404	43824	12271	0.28	4534	42496	11899	0.28	4665
86	64	39010	31208	0.80	3488	37350	29880	0.80	3662	35856	28685	0.80	3837	34528	27622	0.80	4011
86	68	40670	27656	0.68	3662	39010	26527	0.68	3880	37848	25737	0.68	3968	36520	24834	0.68	4142
86	72	42330	23705	0.56	3793	40836	22868	0.56	4033	39840	22310	0.56	4142	38180	21381	0.56	4316
86	75	44488	19575	0.44	3968	42828	18844	0.44	4186	41832	18406	0.44	4316	40504	17822	0.44	4534
86	79	45816	14661	0.32	4186	44488	14236	0.32	4404	43824	14024	0.32	4534	42496	13599	0.32	4665
88	64	39010	32768	0.84	3488	37350	31374	0.84	3662	35856	30119	0.84	3837	34528	29004	0.84	4011
88	68	40670	29282	0.72	3662	39010	28087	0.72	3880	37848	27251	0.72	3968	36520	26294	0.72	4142
88	72	42330	25398	0.60	3793	40836	24502	0.60	4033	39840	23904	0.60	4142	38180	22908	0.60	4316
88	75	44488	21354	0.48	3968	42828	20557	0.48	4186	41832	20079	0.48	4316	40504	19442	0.48	4534
88	79	45816	16494	0.36	4186	44488	16016	0.36	4404	43824	15777	0.36	4534	42496	15299	0.36	4665
90	64	39010	34329	0.88	3488	37350	32868	0.88	3662	35856	31553	0.88	3837	34528	30385	0.88	4011
90	68	40670	30909	0.76	3662	39010	29648	0.76	3880	37848	28764	0.76	3968	36520	27755	0.76	4142
90	72	42330	27091	0.64	3793	40836	26135	0.64	4033	39840	25498	0.64	4142	38180	24435	0.64	4316
90	75	44488	23134	0.52	3968	42828	22271	0.52	4186	41832	21753	0.52	4316	40504	21062	0.52	4534
90	79	45816	18326	0.40	4186	44488	17795	0.40	4404	43824	17530	0.40	4534	42496	16998	0.40	4665

NOTE CA: Capacity (Btu/h) SHF: Sensible heat factor DB: Dry-bulb temperature
SHC: Sensible heat capacity (Btu/h) P.C. : Power consumption (W) WB: Wet-bulb temperature

MUZ-D36NA (230V)

CAPACITY (Btu/h): 33200 INPUT: 4360 (W) SHF: 0.62

Indoor intake air DB(ºF)	Indoor intake air WB(ºF)	Outdoor intake air DB(ºF)											
		95				104				115			
		CA	SHC	SHF	P.C.	CA	SHC	SHF	P.C.	CA	SHC	SHF	P.C.
70	64	32536	14316	0.44	4273	29880	13147	0.44	4534	27556	12125	0.44	4709
70	68	34196	10943	0.32	4447	31872	10199	0.32	4665	29548	9455	0.32	4927
72	64	32536	15617	0.48	4273	29880	14342	0.48	4534	27556	13227	0.48	4709
72	68	34196	12311	0.36	4447	31872	11474	0.36	4665	29548	10637	0.36	4927
72	72	36188	8685	0.24	4622	33864	8127	0.24	4883	31540	7570	0.24	5058
73	64	32536	16919	0.52	4273	29880	15538	0.52	4534	27556	14329	0.52	4709
73	68	34196	13678	0.40	4447	31872	12749	0.40	4665	29548	11819	0.40	4927
73	72	36188	10133	0.28	4622	33864	9482	0.28	4883	31540	8831	0.28	5058
75	64	32536	18220	0.56	4273	29880	16733	0.56	4534	27556	15431	0.56	4709
75	68	34196	15046	0.44	4447	31872	14024	0.44	4665	29548	13001	0.44	4927
75	72	36188	11580	0.32	4622	33864	10836	0.32	4883	31540	10093	0.32	5058
75	75	38180	7636	0.20	4796	35856	7171	0.20	5014	33864	6773	0.20	5232
77	64	32536	19522	0.60	4273	29880	17928	0.60	4534	27556	16534	0.6	4709
77	68	34196	16414	0.48	4447	31872	15299	0.48	4665	29548	14183	0.48	4927
77	72	36188	13028	0.36	4622	33864	12191	0.36	4883	31540	11354	0.36	5058
77	75	38180	9163	0.24	4796	35856	8605	0.24	5014	33864	8127	0.24	5232
79	64	32536	20823	0.64	4273	29880	19123	0.64	4534	27556	17636	0.64	4709
79	68	34196	17782	0.52	4447	31872	16573	0.52	4665	29548	15365	0.52	4927
79	72	36188	14475	0.40	4622	33864	13546	0.40	4883	31540	12616	0.40	5058
79	75	38180	10690	0.28	4796	35856	10040	0.28	5014	33864	9482	0.28	5232
79	79	40172	6428	0.16	4970	37848	6056	0.16	5188	35524	5684	0.16	5406
81	64	32536	22124	0.68	4273	29880	20318	0.68	4534	27556	18738	0.68	4709
81	68	34196	19150	0.56	4447	31872	17848	0.56	4665	29548	16547	0.56	4927
81	72	36188	15923	0.44	4622	33864	14900	0.44	4883	31540	13878	0.44	5058
81	75	38180	12218	0.32	4796	35856	11474	0.32	5014	33864	10836	0.32	5232
81	79	40172	8034	0.20	4970	37848	7570	0.20	5188	35524	7105	0.20	5406
82	64	32536	23426	0.72	4273	29880	21514	0.72	4534	27556	19840	0.72	4709
82	68	34196	20518	0.60	4447	31872	19123	0.60	4665	29548	17729	0.60	4927
82	72	36188	17370	0.48	4622	33864	16255	0.48	4883	31540	15139	0.48	5058
82	75	38180	13745	0.36	4796	35856	12908	0.36	5014	33864	12191	0.36	5232
82	79	40172	9641	0.24	4970	37848	9084	0.24	5188	35524	8526	0.24	5406
84	64	32536	24727	0.76	4273	29880	22709	0.76	4534	27556	20943	0.76	4709
84	68	34196	21885	0.64	4447	31872	20398	0.64	4665	29548	18911	0.64	4927
84	72	36188	18818	0.52	4622	33864	17609	0.52	4883	31540	16401	0.52	5058
84	75	38180	15272	0.40	4796	35856	14342	0.40	5014	33864	13546	0.40	5232
84	79	40172	11248	0.28	4970	37848	10597	0.28	5188	35524	9947	0.28	5406
86	64	32536	26029	0.80	4273	29880	23904	0.80	4534	27556	22045	0.80	4709
86	68	34196	23253	0.68	4447	31872	21673	0.68	4665	29548	20093	0.68	4927
86	72	36188	20265	0.56	4622	33864	18964	0.56	4883	31540	17662	0.56	5058
86	75	38180	16799	0.44	4796	35856	15777	0.44	5014	33864	14900	0.44	5232
86	79	40172	12855	0.32	4970	37848	12111	0.32	5188	35524	11368	0.32	5406
88	64	32536	27330	0.84	4273	29880	25099	0.84	4534	27556	23147	0.84	4709
88	68	34196	24621	0.72	4447	31872	22948	0.72	4665	29548	21275	0.72	4927
88	72	36188	21713	0.60	4622	33864	20318	0.60	4883	31540	18924	0.60	5058
88	75	38180	18326	0.48	4796	35856	17211	0.48	5014	33864	16255	0.48	5232
88	79	40172	14462	0.36	4970	37848	13625	0.36	5188	35524	12789	0.36	5406
90	64	32536	28632	0.88	4273	29880	26294	0.88	4534	27556	24249	0.88	4709
90	68	34196	25989	0.76	4447	31872	24223	0.76	4665	29548	22456	0.76	4927
90	72	36188	23160	0.64	4622	33864	21673	0.64	4883	31540	20186	0.64	5058
90	75	38180	19854	0.52	4796	35856	18645	0.52	5014	33864	17609	0.52	5232
90	79	40172	16069	0.40	4970	37848	15139	0.40	5188	35524	14210	0.40	5406

NOTE CA: Capacity (Btu/h) SHF: Sensible heat factor DB: Dry-bulb temperature
SHC: Sensible heat capacity (Btu/h) P.C. : Power consumption (W) WB: Wet-bulb temperature

MUY-D36NA (208V)

CAPACITY (Btu/h): 33200 INPUT: 4210 (W) SHF: 0.62

Indoor intake air DB(ºF)	Indoor intake air WB(ºF)	Outdoor intake air DB(ºF)															
		70				77				81				86			
		CA	SHC	SHF	P.C.	CA	SHC	SHF	P.C.	CA	SHC	SHF	P.C.	CA	SHC	SHF	P.C.
70	64	39010	17164	0.44	3368	37350	16434	0.44	3536	35856	15777	0.44	3705	34528	15192	0.44	3873
70	68	40670	13014	0.32	3536	39010	12483	0.32	3747	37848	12111	0.32	3831	36520	11686	0.32	4000
72	64	39010	18725	0.48	3368	37350	17928	0.48	3536	35856	17211	0.48	3705	34528	16573	0.48	3873
72	68	40670	14641	0.36	3536	39010	14044	0.36	3747	37848	13625	0.36	3831	36520	13147	0.36	4000
72	72	42330	10159	0.24	3663	40836	9801	0.24	3894	39840	9562	0.24	4000	38180	9163	0.24	4168
73	64	39010	20285	0.52	3368	37350	19422	0.52	3536	35856	18645	0.52	3705	34528	17955	0.52	3873
73	68	40670	16268	0.40	3536	39010	15604	0.40	3747	37848	15139	0.40	3831	36520	14608	0.40	4000
73	72	42330	11852	0.28	3663	40836	11434	0.28	3894	39840	11155	0.28	4000	38180	10690	0.28	4168
75	64	39010	21846	0.56	3368	37350	20916	0.56	3536	35856	20079	0.56	3705	34528	19336	0.56	3873
75	68	40670	17895	0.44	3536	39010	17164	0.44	3747	37848	16653	0.44	3831	36520	16069	0.44	4000
75	72	42330	13546	0.32	3663	40836	13068	0.32	3894	39840	12749	0.32	4000	38180	12218	0.32	4168
75	75	44488	8898	0.20	3831	42828	8566	0.20	4042	41832	8366	0.20	4168	40504	8101	0.20	4378
77	64	39010	23406	0.60	3368	37350	22410	0.60	3536	35856	21514	0.60	3705	34528	20717	0.60	3873
77	68	40670	19522	0.48	3536	39010	18725	0.48	3747	37848	18167	0.48	3831	36520	17530	0.48	4000
77	72	42330	15239	0.36	3663	40836	14701	0.36	3894	39840	14342	0.36	4000	38180	13745	0.36	4168
77	75	44488	10677	0.24	3831	42828	10279	0.24	4042	41832	10040	0.24	4168	40504	9721	0.24	4378
79	64	39010	24966	0.64	3368	37350	23904	0.64	3536	35856	22948	0.64	3705	34528	22098	0.64	3873
79	68	40670	21148	0.52	3536	39010	20285	0.52	3747	37848	19681	0.52	3831	36520	18990	0.52	4000
79	72	42330	16932	0.40	3663	40836	16334	0.40	3894	39840	15936	0.40	4000	38180	15272	0.40	4168
79	75	44488	12457	0.28	3831	42828	11992	0.28	4042	41832	11713	0.28	4168	40504	11341	0.28	4378
79	79	45816	7331	0.16	4042	44488	7118	0.16	4252	43824	7012	0.16	4378	42496	6799	0.16	4505
81	64	39010	26527	0.68	3368	37350	25398	0.68	3536	35856	24382	0.68	3705	34528	23479	0.68	3873
81	68	40670	22775	0.56	3536	39010	21846	0.56	3747	37848	21195	0.56	3831	36520	20451	0.56	4000
81	72	42330	18625	0.44	3663	40836	17968	0.44	3894	39840	17530	0.44	4000	38180	16799	0.44	4168
81	75	44488	14236	0.32	3831	42828	13705	0.32	4042	41832	13386	0.32	4168	40504	12961	0.32	4378
81	79	45816	9163	0.20	4042	44488	8898	0.20	4252	43824	8765	0.20	4378	42496	8499	0.20	4505
82	64	39010	28087	0.72	3368	37350	26892	0.72	3536	35856	25816	0.72	3705	34528	24860	0.72	3873
82	68	40670	24402	0.60	3536	39010	23406	0.60	3747	37848	22709	0.60	3831	36520	21912	0.60	4000
82	72	42330	20318	0.48	3663	40836	19601	0.48	3894	39840	19123	0.48	4000	38180	18326	0.48	4168
82	75	44488	16016	0.36	3831	42828	15418	0.36	4042	41832	15060	0.36	4168	40504	14581	0.36	4378
82	79	45816	10996	0.24	4042	44488	10677	0.24	4252	43824	10518	0.24	4378	42496	10199	0.24	4505
84	64	39010	29648	0.76	3368	37350	28386	0.76	3536	35856	27251	0.76	3705	34528	26241	0.76	3873
84	68	40670	26029	0.64	3536	39010	24966	0.64	3747	37848	24223	0.64	3831	36520	23373	0.64	4000
84	72	42330	22012	0.52	3663	40836	21235	0.52	3894	39840	20717	0.52	4000	38180	19854	0.52	4168
84	75	44488	17795	0.40	3831	42828	17131	0.40	4042	41832	16733	0.40	4168	40504	16202	0.40	4378
84	79	45816	12828	0.28	4042	44488	12457	0.28	4252	43824	12271	0.28	4378	42496	11899	0.28	4505
86	64	39010	31208	0.80	3368	37350	29880	0.80	3536	35856	28685	0.80	3705	34528	27622	0.80	3873
86	68	40670	27656	0.68	3536	39010	26527	0.68	3747	37848	25737	0.68	3831	36520	24834	0.68	4000
86	72	42330	23705	0.56	3663	40836	22868	0.56	3894	39840	22310	0.56	4000	38180	21381	0.56	4168
86	75	44488	19575	0.44	3831	42828	18844	0.44	4042	41832	18406	0.44	4168	40504	17822	0.44	4378
86	79	45816	14661	0.32	4042	44488	14236	0.32	4252	43824	14024	0.32	4378	42496	13599	0.32	4505
88	64	39010	32768	0.84	3368	37350	31374	0.84	3536	35856	30119	0.84	3705	34528	29004	0.84	3873
88	68	40670	29282	0.72	3536	39010	28087	0.72	3747	37848	27251	0.72	3831	36520	26294	0.72	4000
88	72	42330	25398	0.60	3663	40836	24502	0.60	3894	39840	23904	0.60	4000	38180	22908	0.60	4168
88	75	44488	21354	0.48	3831	42828	20557	0.48	4042	41832	20079	0.48	4168	40504	19442	0.48	4378
88	79	45816	16494	0.36	4042	44488	16016	0.36	4252	43824	15777	0.36	4378	42496	15299	0.36	4505
90	64	39010	34329	0.88	3368	37350	32868	0.88	3536	35856	31553	0.88	3705	34528	30385	0.88	3873
90	68	40670	30909	0.76	3536	39010	29648	0.76	3747	37848	28764	0.76	3831	36520	27755	0.76	4000
90	72	42330	27091	0.64	3663	40836	26135	0.64	3894	39840	25498	0.64	4000	38180	24435	0.64	4168
90	75	44488	23134	0.52	3831	42828	22271	0.52	4042	41832	21753	0.52	4168	40504	21062	0.52	4378
90	79	45816	18326	0.40	4042	44488	17795	0.40	4252	43824	17530	0.40	4378	42496	16998	0.40	4505

NOTE CA: Capacity (Btu/h) SHF: Sensible heat factor DB: Dry-bulb temperature
SHC: Sensible heat capacity (Btu/h) P.C. : Power consumption (W) WB: Wet-bulb temperature

MUY-D36NA (208V)

CAPACITY (Btu/h): 33200 INPUT: 4210 (W) SHF: 0.62

Indoor intake air DB(ºF)	Indoor intake air WB(ºF)	Outdoor intake air DB(ºF)											
		95				104				115			
		CA	SHC	SHF	P.C.	CA	SHC	SHF	P.C.	CA	SHC	SHF	P.C.
70	64	32536	14316	0.44	4126	29880	13147	0.44	4378	27556	12125	0.44	4547
70	68	34196	10943	0.32	4294	31872	10199	0.32	4505	29548	9455	0.32	4757
72	64	32536	15617	0.48	4126	29880	14342	0.48	4378	27556	13227	0.48	4547
72	68	34196	12311	0.36	4294	31872	11474	0.36	4505	29548	10637	0.36	4757
72	72	36188	8685	0.24	4463	33864	8127	0.24	4715	31540	7570	0.24	4884
73	64	32536	16919	0.52	4126	29880	15538	0.52	4378	27556	14329	0.52	4547
73	68	34196	13678	0.40	4294	31872	12749	0.40	4505	29548	11819	0.40	4757
73	72	36188	10133	0.28	4463	33864	9482	0.28	4715	31540	8831	0.28	4884
75	64	32536	18220	0.56	4126	29880	16733	0.56	4378	27556	15431	0.56	4547
75	68	34196	15046	0.44	4294	31872	14024	0.44	4505	29548	13001	0.44	4757
75	72	36188	11580	0.32	4463	33864	10836	0.32	4715	31540	10093	0.32	4884
75	75	38180	7636	0.20	4631	35856	7171	0.20	4842	33864	6773	0.20	5052
77	64	32536	19522	0.60	4126	29880	17928	0.60	4378	27556	16534	0.6	4547
77	68	34196	16414	0.48	4294	31872	15299	0.48	4505	29548	14183	0.48	4757
77	72	36188	13028	0.36	4463	33864	12191	0.36	4715	31540	11354	0.36	4884
77	75	38180	9163	0.24	4631	35856	8605	0.24	4842	33864	8127	0.24	5052
79	64	32536	20823	0.64	4126	29880	19123	0.64	4378	27556	17636	0.64	4547
79	68	34196	17782	0.52	4294	31872	16573	0.52	4505	29548	15365	0.52	4757
79	72	36188	14475	0.40	4463	33864	13546	0.40	4715	31540	12616	0.40	4884
79	75	38180	10690	0.28	4631	35856	10040	0.28	4842	33864	9482	0.28	5052
79	79	40172	6428	0.16	4799	37848	6056	0.16	5010	35524	5684	0.16	5220
81	64	32536	22124	0.68	4126	29880	20318	0.68	4378	27556	18738	0.68	4547
81	68	34196	19150	0.56	4294	31872	17848	0.56	4505	29548	16547	0.56	4757
81	72	36188	15923	0.44	4463	33864	14900	0.44	4715	31540	13878	0.44	4884
81	75	38180	12218	0.32	4631	35856	11474	0.32	4842	33864	10836	0.32	5052
81	79	40172	8034	0.20	4799	37848	7570	0.20	5010	35524	7105	0.20	5220
82	64	32536	23426	0.72	4126	29880	21514	0.72	4378	27556	19840	0.72	4547
82	68	34196	20518	0.60	4294	31872	19123	0.60	4505	29548	17729	0.60	4757
82	72	36188	17370	0.48	4463	33864	16255	0.48	4715	31540	15139	0.48	4884
82	75	38180	13745	0.36	4631	35856	12908	0.36	4842	33864	12191	0.36	5052
82	79	40172	9641	0.24	4799	37848	9084	0.24	5010	35524	8526	0.24	5220
84	64	32536	24727	0.76	4126	29880	22709	0.76	4378	27556	20943	0.76	4547
84	68	34196	21885	0.64	4294	31872	20398	0.64	4505	29548	18911	0.64	4757
84	72	36188	18818	0.52	4463	33864	17609	0.52	4715	31540	16401	0.52	4884
84	75	38180	15272	0.40	4631	35856	14342	0.40	4842	33864	13546	0.40	5052
84	79	40172	11248	0.28	4799	37848	10597	0.28	5010	35524	9947	0.28	5220
86	64	32536	26029	0.80	4126	29880	23904	0.80	4378	27556	22045	0.80	4547
86	68	34196	23253	0.68	4294	31872	21673	0.68	4505	29548	20093	0.68	4757
86	72	36188	20265	0.56	4463	33864	18964	0.56	4715	31540	17662	0.56	4884
86	75	38180	16799	0.44	4631	35856	15777	0.44	4842	33864	14900	0.44	5052
86	79	40172	12855	0.32	4799	37848	12111	0.32	5010	35524	11368	0.32	5220
88	64	32536	27330	0.84	4126	29880	25099	0.84	4378	27556	23147	0.84	4547
88	68	34196	24621	0.72	4294	31872	22948	0.72	4505	29548	21275	0.72	4757
88	72	36188	21713	0.60	4463	33864	20318	0.60	4715	31540	18924	0.60	4884
88	75	38180	18326	0.48	4631	35856	17211	0.48	4842	33864	16255	0.48	5052
88	79	40172	14462	0.36	4799	37848	13625	0.36	5010	35524	12789	0.36	5220
90	64	32536	28632	0.88	4126	29880	26294	0.88	4378	27556	24249	0.88	4547
90	68	34196	25989	0.76	4294	31872	24223	0.76	4505	29548	22456	0.76	4757
90	72	36188	23160	0.64	4463	33864	21673	0.64	4715	31540	20186	0.64	4884
90	75	38180	19854	0.52	4631	35856	18645	0.52	4842	33864	17609	0.52	5052
90	79	40172	16069	0.40	4799	37848	15139	0.40	5010	35524	14210	0.40	5220

NOTE CA: Capacity (Btu/h) SHF: Sensible heat factor DB: Dry-bulb temperature
SHC: Sensible heat capacity (Btu/h) P.C. : Power consumption (W) WB: Wet-bulb temperature

MUY-D36NA (230V)

CAPACITY (Btu/h): 34600 INPUT: 4240 (W) SHF: 0.62

Indoor intake air DB(ºF)	Indoor intake air WB(ºF)	Outdoor intake air DB(ºF)															
		70				77				81				86			
		CA	SHC	SHF	P.C.	CA	SHC	SHF	P.C.	CA	SHC	SHF	P.C.	CA	SHC	SHF	P.C.
70	64	40655	17888	0.44	3392	38925	17127	0.44	3562	37368	16442	0.44	3731	35984	15833	0.44	3901
70	68	42385	13563	0.32	3562	40655	13010	0.32	3774	39444	12622	0.32	3858	38060	12179	0.32	4028
72	64	40655	19514	0.48	3392	38925	18684	0.48	3562	37368	17937	0.48	3731	35984	17272	0.48	3901
72	68	42385	15259	0.36	3562	40655	14636	0.36	3774	39444	14200	0.36	3858	38060	13702	0.36	4028
72	72	44115	10588	0.24	3689	42558	10214	0.24	3922	41520	9965	0.24	4028	39790	9550	0.24	4198
73	64	40655	21141	0.52	3392	38925	20241	0.52	3562	37368	19431	0.52	3731	35984	18712	0.52	3901
73	68	42385	16954	0.40	3562	40655	16262	0.40	3774	39444	15778	0.40	3858	38060	15224	0.40	4028
73	72	44115	12352	0.28	3689	42558	11916	0.28	3922	41520	11626	0.28	4028	39790	11141	0.28	4198
75	64	40655	22767	0.56	3392	38925	21798	0.56	3562	37368	20926	0.56	3731	35984	20151	0.56	3901
75	68	42385	18649	0.44	3562	40655	17888	0.44	3774	39444	17355	0.44	3858	38060	16746	0.44	4028
75	72	44115	14117	0.32	3689	42558	13619	0.32	3922	41520	13286	0.32	4028	39790	12733	0.32	4198
75	75	46364	9273	0.20	3858	44634	8927	0.20	4070	43596	8719	0.20	4198	42212	8442	0.20	4410
77	64	40655	24393	0.60	3392	38925	23355	0.60	3562	37368	22421	0.60	3731	35984	21590	0.60	3901
77	68	42385	20345	0.48	3562	40655	19514	0.48	3774	39444	18933	0.48	3858	38060	18269	0.48	4028
77	72	44115	15881	0.36	3689	42558	15321	0.36	3922	41520	14947	0.36	4028	39790	14324	0.36	4198
77	75	46364	11127	0.24	3858	44634	10712	0.24	4070	43596	10463	0.24	4198	42212	10131	0.24	4410
79	64	40655	26019	0.64	3392	38925	24912	0.64	3562	37368	23916	0.64	3731	35984	23030	0.64	3901
79	68	42385	22040	0.52	3562	40655	21141	0.52	3774	39444	20511	0.52	3858	38060	19791	0.52	4028
79	72	44115	17646	0.40	3689	42558	17023	0.40	3922	41520	16608	0.40	4028	39790	15916	0.40	4198
79	75	46364	12982	0.28	3858	44634	12498	0.28	4070	43596	12207	0.28	4198	42212	11819	0.28	4410
79	79	47748	7640	0.16	4070	46364	7418	0.16	4282	45672	7308	0.16	4410	44288	7086	0.16	4537
81	64	40655	27645	0.68	3392	38925	26469	0.68	3562	37368	25410	0.68	3731	35984	24469	0.68	3901
81	68	42385	23736	0.56	3562	40655	22767	0.56	3774	39444	22089	0.56	3858	38060	21314	0.56	4028
81	72	44115	19411	0.44	3689	42558	18726	0.44	3922	41520	18269	0.44	4028	39790	17508	0.44	4198
81	75	46364	14836	0.32	3858	44634	14283	0.32	4070	43596	13951	0.32	4198	42212	13508	0.32	4410
81	79	47748	9550	0.20	4070	46364	9273	0.20	4282	45672	9134	0.20	4410	44288	8858	0.20	4537
82	64	40655	29272	0.72	3392	38925	28026	0.72	3562	37368	26905	0.72	3731	35984	25908	0.72	3901
82	68	42385	25431	0.60	3562	40655	24393	0.60	3774	39444	23666	0.60	3858	38060	22836	0.60	4028
82	72	44115	21175	0.48	3689	42558	20428	0.48	3922	41520	19930	0.48	4028	39790	19099	0.48	4198
82	75	46364	16691	0.36	3858	44634	16068	0.36	4070	43596	15695	0.36	4198	42212	15196	0.36	4410
82	79	47748	11460	0.24	4070	46364	11127	0.24	4282	45672	10961	0.24	4410	44288	10629	0.24	4537
84	64	40655	30898	0.76	3392	38925	29583	0.76	3562	37368	28400	0.76	3731	35984	27348	0.76	3901
84	68	42385	27126	0.64	3562	40655	26019	0.64	3774	39444	25244	0.64	3858	38060	24358	0.64	4028
84	72	44115	22940	0.52	3689	42558	22130	0.52	3922	41520	21590	0.52	4028	39790	20691	0.52	4198
84	75	46364	18546	0.40	3858	44634	17854	0.40	4070	43596	17438	0.40	4198	42212	16885	0.40	4410
84	79	47748	13369	0.28	4070	46364	12982	0.28	4282	45672	12788	0.28	4410	44288	12401	0.28	4537
86	64	40655	32524	0.80	3392	38925	31140	0.80	3562	37368	29894	0.80	3731	35984	28787	0.80	3901
86	68	42385	28822	0.68	3562	40655	27645	0.68	3774	39444	26822	0.68	3858	38060	25881	0.68	4028
86	72	44115	24704	0.56	3689	42558	23832	0.56	3922	41520	23251	0.56	4028	39790	22282	0.56	4198
86	75	46364	20400	0.44	3858	44634	19639	0.44	4070	43596	19182	0.44	4198	42212	18573	0.44	4410
86	79	47748	15279	0.32	4070	46364	14836	0.32	4282	45672	14615	0.32	4410	44288	14172	0.32	4537
88	64	40655	34150	0.84	3392	38925	32697	0.84	3562	37368	31389	0.84	3731	35984	30227	0.84	3901
88	68	42385	30517	0.72	3562	40655	29272	0.72	3774	39444	28400	0.72	3858	38060	27403	0.72	4028
88	72	44115	26469	0.60	3689	42558	25535	0.60	3922	41520	24912	0.60	4028	39790	23874	0.60	4198
88	75	46364	22255	0.48	3858	44634	21424	0.48	4070	43596	20926	0.48	4198	42212	20262	0.48	4410
88	79	47748	17189	0.36	4070	46364	16691	0.36	4282	45672	16442	0.36	4410	44288	15944	0.36	4537
90	64	40655	35776	0.88	3392	38925	34254	0.88	3562	37368	32884	0.88	3731	35984	31666	0.88	3901
90	68	42385	32213	0.76	3562	40655	30898	0.76	3774	39444	29977	0.76	3858	38060	28926	0.76	4028
90	72	44115	28234	0.64	3689	42558	27237	0.64	3922	41520	26573	0.64	4028	39790	25466	0.64	4198
90	75	46364	24109	0.52	3858	44634	23210	0.52	4070	43596	22670	0.52	4198	42212	21950	0.52	4410
90	79	47748	19099	0.40	4070	46364	18546	0.40	4282	45672	18269	0.40	4410	44288	17715	0.40	4537

NOTE CA: Capacity (Btu/h) SHF: Sensible heat factor DB: Dry-bulb temperature
SHC: Sensible heat capacity (Btu/h) P.C. : Power consumption (W) WB: Wet-bulb temperature

MUY-D36NA (230V)

CAPACITY (Btu/h): 34600 INPUT: 4240 (W) SHF: 0.62

Indoor intake air DB(ºF)	Indoor intake air WB(ºF)	Outdoor intake air DB(ºF)											
		95				104				115			
		CA	SHC	SHF	P.C.	CA	SHC	SHF	P.C.	CA	SHC	SHF	P.C.
70	64	33908	14920	0.44	4155	31140	13702	0.44	4410	28718	12636	0.44	4579
70	68	35638	11404	0.32	4325	33216	10629	0.32	4537	30794	9854	0.32	4791
72	64	33908	16276	0.48	4155	31140	14947	0.48	4410	28718	13785	0.48	4579
72	68	35638	12830	0.36	4325	33216	11958	0.36	4537	30794	11086	0.36	4791
72	72	37714	9051	0.24	4494	35292	8470	0.24	4749	32870	7889	0.24	4918
73	64	33908	17632	0.52	4155	31140	16193	0.52	4410	28718	14933	0.52	4579
73	68	35638	14255	0.40	4325	33216	13286	0.40	4537	30794	12318	0.40	4791
73	72	37714	10560	0.28	4494	35292	9882	0.28	4749	32870	9204	0.28	4918
75	64	33908	18988	0.56	4155	31140	17438	0.56	4410	28718	16082	0.56	4579
75	68	35638	15681	0.44	4325	33216	14615	0.44	4537	30794	13549	0.44	4791
75	72	37714	12068	0.32	4494	35292	11293	0.32	4749	32870	10518	0.32	4918
75	75	39790	7958	0.20	4664	37368	7474	0.20	4876	35292	7058	0.20	5088
77	64	33908	20345	0.60	4155	31140	18684	0.60	4410	28718	17231	0.6	4579
77	68	35638	17106	0.48	4325	33216	15944	0.48	4537	30794	14781	0.48	4791
77	72	37714	13577	0.36	4494	35292	12705	0.36	4749	32870	11833	0.36	4918
77	75	39790	9550	0.24	4664	37368	8968	0.24	4876	35292	8470	0.24	5088
79	64	33908	21701	0.64	4155	31140	19930	0.64	4410	28718	18380	0.64	4579
79	68	35638	18532	0.52	4325	33216	17272	0.52	4537	30794	16013	0.52	4791
79	72	37714	15086	0.40	4494	35292	14117	0.40	4749	32870	13148	0.40	4918
79	75	39790	11141	0.28	4664	37368	10463	0.28	4876	35292	9882	0.28	5088
79	79	41866	6699	0.16	4834	39444	6311	0.16	5046	37022	5924	0.16	5258
81	64	33908	23057	0.68	4155	31140	21175	0.68	4410	28718	19528	0.68	4579
81	68	35638	19957	0.56	4325	33216	18601	0.56	4537	30794	17245	0.56	4791
81	72	37714	16594	0.44	4494	35292	15528	0.44	4749	32870	14463	0.44	4918
81	75	39790	12733	0.32	4664	37368	11958	0.32	4876	35292	11293	0.32	5088
81	79	41866	8373	0.20	4834	39444	7889	0.20	5046	37022	7404	0.20	5258
82	64	33908	24414	0.72	4155	31140	22421	0.72	4410	28718	20677	0.72	4579
82	68	35638	21383	0.60	4325	33216	19930	0.60	4537	30794	18476	0.60	4791
82	72	37714	18103	0.48	4494	35292	16940	0.48	4749	32870	15778	0.48	4918
82	75	39790	14324	0.36	4664	37368	13452	0.36	4876	35292	12705	0.36	5088
82	79	41866	10048	0.24	4834	39444	9467	0.24	5046	37022	8885	0.24	5258
84	64	33908	25770	0.76	4155	31140	23666	0.76	4410	28718	21826	0.76	4579
84	68	35638	22808	0.64	4325	33216	21258	0.64	4537	30794	19708	0.64	4791
84	72	37714	19611	0.52	4494	35292	18352	0.52	4749	32870	17092	0.52	4918
84	75	39790	15916	0.40	4664	37368	14947	0.40	4876	35292	14117	0.40	5088
84	79	41866	11722	0.28	4834	39444	11044	0.28	5046	37022	10366	0.28	5258
86	64	33908	27126	0.80	4155	31140	24912	0.80	4410	28718	22974	0.80	4579
86	68	35638	24234	0.68	4325	33216	22587	0.68	4537	30794	20940	0.68	4791
86	72	37714	21120	0.56	4494	35292	19764	0.56	4749	32870	18407	0.56	4918
86	75	39790	17508	0.44	4664	37368	16442	0.44	4876	35292	15528	0.44	5088
86	79	41866	13397	0.32	4834	39444	12622	0.32	5046	37022	11847	0.32	5258
88	64	33908	28483	0.84	4155	31140	26158	0.84	4410	28718	24123	0.84	4579
88	68	35638	25659	0.72	4325	33216	23916	0.72	4537	30794	22172	0.72	4791
88	72	37714	22628	0.60	4494	35292	21175	0.60	4749	32870	19722	0.60	4918
88	75	39790	19099	0.48	4664	37368	17937	0.48	4876	35292	16940	0.48	5088
88	79	41866	15072	0.36	4834	39444	14200	0.36	5046	37022	13328	0.36	5258
90	64	33908	29839	0.88	4155	31140	27403	0.88	4410	28718	25272	0.88	4579
90	68	35638	27085	0.76	4325	33216	25244	0.76	4537	30794	23403	0.76	4791
90	72	37714	24137	0.64	4494	35292	22587	0.64	4749	32870	21037	0.64	4918
90	75	39790	20691	0.52	4664	37368	19431	0.52	4876	35292	18352	0.52	5088
90	79	41866	16746	0.40	4834	39444	15778	0.40	5046	37022	14809	0.40	5258

NOTE CA: Capacity (Btu/h) SHF: Sensible heat factor DB: Dry-bulb temperature
SHC: Sensible heat capacity (Btu/h) P.C. : Power consumption (W) WB: Wet-bulb temperature

12-3. HYPER HEATING INVERTER
COOLING CAPACITY
MUZ-FH06NA MUZ-FH06NAH

CAPACITY (Btu/h): 6000 INPUT (W): 315 SHF: 0.96

INDOOR DB (°F)	INDOOR WB (°F)	OUTDOOR DB (°F)															
		70				77				81				86			
		CA	SHC	SHF	P.C.	CA	SHC	SHF	P.C.	CA	SHC	SHF	P.C.	CA	SHC	SHF	P.C.
70	64	7050	5499	0.78	252	6750	5265	0.78	265	6480	5054	0.78	277	6240	4867	0.78	290
70	68	7350	4851	0.66	265	7050	4653	0.66	280	6840	4514	0.66	287	6600	4356	0.66	299
72	64	7050	5781	0.82	252	6750	5535	0.82	265	6480	5314	0.82	277	6240	5117	0.82	290
72	68	7350	5145	0.70	265	7050	4935	0.70	280	6840	4788	0.70	287	6600	4620	0.70	299
72	72	7650	4437	0.58	274	7380	4280	0.58	291	7200	4176	0.58	299	6900	4002	0.58	312
73	64	7050	6063	0.86	252	6750	5805	0.86	265	6480	5573	0.86	277	6240	5366	0.86	290
73	68	7350	5439	0.74	265	7050	5217	0.74	280	6840	5062	0.74	287	6600	4884	0.74	299
73	72	7650	4743	0.62	274	7380	4576	0.62	291	7200	4464	0.62	299	6900	4278	0.62	312
75	64	7050	6345	0.90	252	6750	6075	0.90	265	6480	5832	0.90	277	6240	5616	0.90	290
75	68	7350	5733	0.78	265	7050	5499	0.78	280	6840	5335	0.78	287	6600	5148	0.78	299
75	72	7650	5049	0.66	274	7380	4871	0.66	291	7200	4752	0.66	299	6900	4554	0.66	312
75	75	8040	4342	0.54	287	7740	4180	0.54	302	7560	4082	0.54	312	7320	3953	0.54	328
77	64	7050	6627	0.94	252	6750	6345	0.94	265	6480	6091	0.94	277	6240	5866	0.94	290
77	68	7350	6027	0.82	265	7050	5781	0.82	280	6840	5609	0.82	287	6600	5412	0.82	299
77	72	7650	5355	0.70	274	7380	5166	0.70	291	7200	5040	0.70	299	6900	4830	0.70	312
77	75	8040	4663	0.58	287	7740	4489	0.58	302	7560	4385	0.58	312	7320	4246	0.58	328
79	64	7050	6909	0.98	252	6750	6615	0.98	265	6480	6350	0.98	277	6240	6115	0.98	290
79	68	7350	6321	0.86	265	7050	6063	0.86	280	6840	5882	0.86	287	6600	5676	0.86	299
79	72	7650	5661	0.74	274	7380	5461	0.74	291	7200	5328	0.74	299	6900	5106	0.74	312
79	75	8040	4985	0.62	287	7740	4799	0.62	302	7560	4687	0.62	312	7320	4538	0.62	328
79	79	8280	4140	0.50	302	8040	4020	0.50	318	7920	3960	0.50	328	7680	3840	0.50	337
81	64	7050	7050	1.00	252	6750	6750	1.00	265	6480	6480	1.00	277	6240	6240	1.00	290
81	68	7350	6615	0.90	265	7050	6345	0.90	280	6840	6156	0.90	287	6600	5940	0.90	299
81	72	7650	5967	0.78	274	7380	5756	0.78	291	7200	5616	0.78	299	6900	5382	0.78	312
81	75	8040	5306	0.66	287	7740	5108	0.66	302	7560	4990	0.66	312	7320	4831	0.66	328
81	79	8280	4471	0.54	302	8040	4342	0.54	318	7920	4277	0.54	328	7680	4147	0.54	337
82	64	7050	7050	1.00	252	6750	6750	1.00	265	6480	6480	1.00	277	6240	6240	1.00	290
82	68	7350	6909	0.94	265	7050	6627	0.94	280	6840	6430	0.94	287	6600	6204	0.94	299
82	72	7650	6273	0.82	274	7380	6052	0.82	291	7200	5904	0.82	299	6900	5658	0.82	312
82	75	8040	5628	0.70	287	7740	5418	0.70	302	7560	5292	0.70	312	7320	5124	0.70	328
82	79	8280	4802	0.58	302	8040	4663	0.58	318	7920	4594	0.58	328	7680	4454	0.58	337
84	64	7050	7050	1.00	252	6750	6750	1.00	265	6480	6480	1.00	277	6240	6240	1.00	290
84	68	7350	7203	0.98	265	7050	6909	0.98	280	6840	6703	0.98	287	6600	6468	0.98	299
84	72	7650	6579	0.86	274	7380	6347	0.86	291	7200	6192	0.86	299	6900	5934	0.86	312
84	75	8040	5950	0.74	287	7740	5728	0.74	302	7560	5594	0.74	312	7320	5417	0.74	328
84	79	8280	5134	0.62	302	8040	4985	0.62	318	7920	4910	0.62	328	7680	4762	0.62	337
86	64	7050	7050	1.00	252	6750	6750	1.00	265	6480	6480	1.00	277	6240	6240	1.00	290
86	68	7350	7350	1.00	265	7050	7050	1.00	280	6840	6840	1.00	287	6600	6600	1.00	299
86	72	7650	6885	0.90	274	7380	6642	0.90	291	7200	6480	0.90	299	6900	6210	0.90	312
86	75	8040	6271	0.78	287	7740	6037	0.78	302	7560	5897	0.78	312	7320	5710	0.78	328
86	79	8280	5465	0.66	302	8040	5306	0.66	318	7920	5227	0.66	328	7680	5069	0.66	337
88	64	7050	7050	1.00	252	6750	6750	1.00	265	6480	6480	1.00	277	6240	6240	1.00	290
88	68	7350	7350	1.00	265	7050	7050	1.00	280	6840	6840	1.00	287	6600	6600	1.00	299
88	72	7650	7191	0.94	274	7380	6937	0.94	291	7200	6768	0.94	299	6900	6486	0.94	312
88	75	8040	6593	0.82	287	7740	6347	0.82	302	7560	6199	0.82	312	7320	6002	0.82	328
88	79	8280	5796	0.70	302	8040	5628	0.70	318	7920	5544	0.70	328	7680	5376	0.70	337
90	64	7050	7050	1.00	252	6750	6750	1.00	265	6480	6480	1.00	277	6240	6240	1.00	290
90	68	7350	7350	1.00	265	7050	7050	1.00	280	6840	6840	1.00	287	6600	6600	1.00	299
90	72	7650	7497	0.98	274	7380	7232	0.98	291	7200	7056	0.98	299	6900	6762	0.98	312
90	75	8040	6914	0.86	287	7740	6656	0.86	302	7560	6502	0.86	312	7320	6295	0.86	328
90	79	8280	6127	0.74	302	8040	5950	0.74	318	7920	5861	0.74	328	7680	5683	0.74	337

NOTE CA: Capacity (Btu/h) SHF: Sensible heat factor DB: Dry-bulb temperature
SHC: Sensible heat capacity (Btu/h) P.C. : Power consumption (W) WB: Wet-bulb temperature

MUZ-FH06NA MUZ-FH06NAH

CAPACITY (Btu/h): 6000 INPUT (W): 315 SHF: 0.96

INDOOR DB (°F)	INDOOR WB (°F)	OUTDOOR DB (°F)											
		95				104				115			
		CA	SHC	SHF	P.C.	CA	SHC	SHF	P.C.	CA	SHC	SHF	P.C.
70	64	5880	4586	0.78	309	5400	4212	0.78	328	4980	3884	0.78	340
70	68	6180	4079	0.66	321	5760	3802	0.66	337	5340	3524	0.66	356
72	64	5880	4822	0.82	309	5400	4428	0.82	328	4980	4084	0.82	340
72	68	6180	4326	0.70	321	5760	4032	0.70	337	5340	3738	0.70	356
72	72	6540	3793	0.58	334	6120	3550	0.58	353	5700	3306	0.58	365
73	64	5880	5057	0.86	309	5400	4644	0.86	328	4980	4283	0.86	340
73	68	6180	4573	0.74	321	5760	4262	0.74	337	5340	3952	0.74	356
73	72	6540	4055	0.62	334	6120	3794	0.62	353	5700	3534	0.62	365
75	64	5880	5292	0.90	309	5400	4860	0.90	328	4980	4482	0.90	340
75	68	6180	4820	0.78	321	5760	4493	0.78	337	5340	4165	0.78	356
75	72	6540	4316	0.66	334	6120	4039	0.66	353	5700	3762	0.66	365
75	75	6900	3726	0.54	347	6480	3499	0.54	362	6120	3305	0.54	378
77	64	5880	5527	0.94	309	5400	5076	0.94	328	4980	4681	0.94	340
77	68	6180	5068	0.82	321	5760	4723	0.82	337	5340	4379	0.82	356
77	72	6540	4578	0.70	334	6120	4284	0.70	353	5700	3990	0.70	365
77	75	6900	4002	0.58	347	6480	3758	0.58	362	6120	3550	0.58	378
79	64	5880	5762	0.98	309	5400	5292	0.98	328	4980	4880	0.98	340
79	68	6180	5315	0.86	321	5760	4954	0.86	337	5340	4592	0.86	356
79	72	6540	4840	0.74	334	6120	4529	0.74	353	5700	4218	0.74	365
79	75	6900	4278	0.62	347	6480	4018	0.62	362	6120	3794	0.62	378
79	79	7260	3630	0.50	359	6840	3420	0.50	375	6420	3210	0.50	391
81	64	5880	5880	1.00	309	5400	5400	1.00	328	4980	4980	1.00	340
81	68	6180	5562	0.90	321	5760	5184	0.90	337	5340	4806	0.90	356
81	72	6540	5101	0.78	334	6120	4774	0.78	353	5700	4446	0.78	365
81	75	6900	4554	0.66	347	6480	4277	0.66	362	6120	4039	0.66	378
81	79	7260	3920	0.54	359	6840	3694	0.54	375	6420	3467	0.54	391
82	64	5880	5880	1.00	309	5400	5400	1.00	328	4980	4980	1.00	340
82	68	6180	5809	0.94	321	5760	5414	0.94	337	5340	5020	0.94	356
82	72	6540	5363	0.82	334	6120	5018	0.82	353	5700	4674	0.82	365
82	75	6900	4830	0.70	347	6480	4536	0.70	362	6120	4284	0.70	378
82	79	7260	4211	0.58	359	6840	3967	0.58	375	6420	3724	0.58	391
84	64	5880	5880	1.00	309	5400	5400	1.00	328	4980	4980	1.00	340
84	68	6180	6056	0.98	321	5760	5645	0.98	337	5340	5233	0.98	356
84	72	6540	5624	0.86	334	6120	5263	0.86	353	5700	4902	0.86	365
84	75	6900	5106	0.74	347	6480	4795	0.74	362	6120	4529	0.74	378
84	79	7260	4501	0.62	359	6840	4241	0.62	375	6420	3980	0.62	391
86	64	5880	5880	1.00	309	5400	5400	1.00	328	4980	4980	1.00	340
86	68	6180	6180	1.00	321	5760	5760	1.00	337	5340	5340	1.00	356
86	72	6540	5886	0.90	334	6120	5508	0.90	353	5700	5130	0.90	365
86	75	6900	5382	0.78	347	6480	5054	0.78	362	6120	4774	0.78	378
86	79	7260	4792	0.66	359	6840	4514	0.66	375	6420	4237	0.66	391
88	64	5880	5880	1.00	309	5400	5400	1.00	328	4980	4980	1.00	340
88	68	6180	6180	1.00	321	5760	5760	1.00	337	5340	5340	1.00	356
88	72	6540	6148	0.94	334	6120	5753	0.94	353	5700	5358	0.94	365
88	75	6900	5658	0.82	347	6480	5314	0.82	362	6120	5018	0.82	378
88	79	7260	5082	0.70	359	6840	4788	0.70	375	6420	4494	0.70	391
90	64	5880	5880	1.00	309	5400	5400	1.00	328	4980	4980	1.00	340
90	68	6180	6180	1.00	321	5760	5760	1.00	337	5340	5340	1.00	356
90	72	6540	6409	0.98	334	6120	5998	0.98	353	5700	5586	0.98	365
90	75	6900	5934	0.86	347	6480	5573	0.86	362	6120	5263	0.86	378
90	79	7260	5372	0.74	359	6840	5062	0.74	375	6420	4751	0.74	391

NOTE CA: Capacity (Btu/h) SHF: Sensible heat factor DB: Dry-bulb temperature
SHC: Sensible heat capacity (Btu/h) P.C. : Power consumption (W) WB: Wet-bulb temperature

MUZ-FH09NA MUZ-FH09NAH

CAPACITY (Btu/h): 9000 INPUT (W): 560 SHF: 0.92

INDOOR DB (°F)	INDOOR WB (°F)	OUTDOOR DB (°F)															
		70				77				81				86			
		CA	SHC	SHF	P.C.	CA	SHC	SHF	P.C.	CA	SHC	SHF	P.C.	CA	SHC	SHF	P.C.
70	64	10575	7826	0.74	448	10125	7493	0.74	470	9720	7193	0.74	493	9360	6926	0.74	515
70	68	11025	6836	0.62	470	10575	6557	0.62	498	10260	6361	0.62	510	9900	6138	0.62	532
72	64	10575	8249	0.78	448	10125	7898	0.78	470	9720	7582	0.78	493	9360	7301	0.78	515
72	68	11025	7277	0.66	470	10575	6980	0.66	498	10260	6772	0.66	510	9900	6534	0.66	532
72	72	11475	6197	0.54	487	11070	5978	0.54	518	10800	5832	0.54	532	10350	5589	0.54	554
73	64	10575	8672	0.82	448	10125	8303	0.82	470	9720	7970	0.82	493	9360	7675	0.82	515
73	68	11025	7718	0.70	470	10575	7403	0.70	498	10260	7182	0.70	510	9900	6930	0.70	532
73	72	11475	6656	0.58	487	11070	6421	0.58	518	10800	6264	0.58	532	10350	6003	0.58	554
75	64	10575	9095	0.86	448	10125	8708	0.86	470	9720	8359	0.86	493	9360	8050	0.86	515
75	68	11025	8159	0.74	470	10575	7826	0.74	498	10260	7592	0.74	510	9900	7326	0.74	532
75	72	11475	7115	0.62	487	11070	6863	0.62	518	10800	6696	0.62	532	10350	6417	0.62	554
75	75	12060	6030	0.50	510	11610	5805	0.50	538	11340	5670	0.50	554	10980	5490	0.50	582
77	64	10575	9518	0.90	448	10125	9113	0.90	470	9720	8748	0.90	493	9360	8424	0.90	515
77	68	11025	8600	0.78	470	10575	8249	0.78	498	10260	8003	0.78	510	9900	7722	0.78	532
77	72	11475	7574	0.66	487	11070	7306	0.66	518	10800	7128	0.66	532	10350	6831	0.66	554
77	75	12060	6512	0.54	510	11610	6269	0.54	538	11340	6124	0.54	554	10980	5929	0.54	582
79	64	10575	9941	0.94	448	10125	9518	0.94	470	9720	9137	0.94	493	9360	8798	0.94	515
79	68	11025	9041	0.82	470	10575	8672	0.82	498	10260	8413	0.82	510	9900	8118	0.82	532
79	72	11475	8033	0.70	487	11070	7749	0.70	518	10800	7560	0.70	532	10350	7245	0.70	554
79	75	12060	6995	0.58	510	11610	6734	0.58	538	11340	6577	0.58	554	10980	6368	0.58	582
79	79	12420	5713	0.46	538	12060	5548	0.46	566	11880	5465	0.46	582	11520	5299	0.46	599
81	64	10575	10364	0.98	448	10125	9923	0.98	470	9720	9526	0.98	493	9360	9173	0.98	515
81	68	11025	9482	0.86	470	10575	9095	0.86	498	10260	8824	0.86	510	9900	8514	0.86	532
81	72	11475	8492	0.74	487	11070	8192	0.74	518	10800	7992	0.74	532	10350	7659	0.74	554
81	75	12060	7477	0.62	510	11610	7198	0.62	538	11340	7031	0.62	554	10980	6808	0.62	582
81	79	12420	6210	0.50	538	12060	6030	0.50	566	11880	5940	0.50	582	11520	5760	0.50	599
82	64	10575	10575	1.00	448	10125	10125	1.00	470	9720	9720	1.00	493	9360	9360	1.00	515
82	68	11025	9923	0.90	470	10575	9518	0.90	498	10260	9234	0.90	510	9900	8910	0.90	532
82	72	11475	8951	0.78	487	11070	8635	0.78	518	10800	8424	0.78	532	10350	8073	0.78	554
82	75	12060	7960	0.66	510	11610	7663	0.66	538	11340	7484	0.66	554	10980	7247	0.66	582
82	79	12420	6707	0.54	538	12060	6512	0.54	566	11880	6415	0.54	582	11520	6221	0.54	599
84	64	10575	10575	1.00	448	10125	10125	1.00	470	9720	9720	1.00	493	9360	9360	1.00	515
84	68	11025	10364	0.94	470	10575	9941	0.94	498	10260	9644	0.94	510	9900	9306	0.94	532
84	72	11475	9410	0.82	487	11070	9077	0.82	518	10800	8856	0.82	532	10350	8487	0.82	554
84	75	12060	8442	0.70	510	11610	8127	0.70	538	11340	7938	0.70	554	10980	7686	0.70	582
84	79	12420	7204	0.58	538	12060	6995	0.58	566	11880	6890	0.58	582	11520	6682	0.58	599
86	64	10575	10575	1.00	448	10125	10125	1.00	470	9720	9720	1.00	493	9360	9360	1.00	515
86	68	11025	10805	0.98	470	10575	10364	0.98	498	10260	10055	0.98	510	9900	9702	0.98	532
86	72	11475	9869	0.86	487	11070	9520	0.86	518	10800	9288	0.86	532	10350	8901	0.86	554
86	75	12060	8924	0.74	510	11610	8591	0.74	538	11340	8392	0.74	554	10980	8125	0.74	582
86	79	12420	7700	0.62	538	12060	7477	0.62	566	11880	7366	0.62	582	11520	7142	0.62	599
88	64	10575	10575	1.00	448	10125	10125	1.00	470	9720	9720	1.00	493	9360	9360	1.00	515
88	68	11025	11025	1.00	470	10575	10575	1.00	498	10260	10260	1.00	510	9900	9900	1.00	532
88	72	11475	10328	0.90	487	11070	9963	0.90	518	10800	9720	0.90	532	10350	9315	0.90	554
88	75	12060	9407	0.78	510	11610	9056	0.78	538	11340	8845	0.78	554	10980	8564	0.78	582
88	79	12420	8197	0.66	538	12060	7960	0.66	566	11880	7841	0.66	582	11520	7603	0.66	599
90	64	10575	10575	1.00	448	10125	10125	1.00	470	9720	9720	1.00	493	9360	9360	1.00	515
90	68	11025	11025	1.00	470	10575	10575	1.00	498	10260	10260	1.00	510	9900	9900	1.00	532
90	72	11475	10787	0.94	487	11070	10406	0.94	518	10800	10152	0.94	532	10350	9729	0.94	554
90	75	12060	9889	0.82	510	11610	9520	0.82	538	11340	9299	0.82	554	10980	9004	0.82	582
90	79	12420	8694	0.70	538	12060	8442	0.70	566	11880	8316	0.70	582	11520	8064	0.70	599

NOTE CA: Capacity (Btu/h) SHF: Sensible heat factor DB: Dry-bulb temperature
SHC: Sensible heat capacity (Btu/h) P.C. : Power consumption (W) WB: Wet-bulb temperature

MUZ-FH09NA MUZ-FH09NAH

CAPACITY (Btu/h): 9000 INPUT (W): 560 SHF: 0.92

INDOOR DB (°F)	INDOOR WB (°F)	OUTDOOR DB (°F)											
		95				104				115			
		CA	SHC	SHF	P.C.	CA	SHC	SHF	P.C.	CA	SHC	SHF	P.C.
70	64	8820	6527	0.74	549	8100	5994	0.74	582	7470	5528	0.74	605
70	68	9270	5747	0.62	571	8640	5357	0.62	599	8010	4966	0.62	633
72	64	8820	6880	0.78	549	8100	6318	0.78	582	7470	5827	0.78	605
72	68	9270	6118	0.66	571	8640	5702	0.66	599	8010	5287	0.66	633
72	72	9810	5297	0.54	594	9180	4957	0.54	627	8550	4617	0.54	650
73	64	8820	7232	0.82	549	8100	6642	0.82	582	7470	6125	0.82	605
73	68	9270	6489	0.70	571	8640	6048	0.70	599	8010	5607	0.70	633
73	72	9810	5690	0.58	594	9180	5324	0.58	627	8550	4959	0.58	650
75	64	8820	7585	0.86	549	8100	6966	0.86	582	7470	6424	0.86	605
75	68	9270	6860	0.74	571	8640	6394	0.74	599	8010	5927	0.74	633
75	72	9810	6082	0.62	594	9180	5692	0.62	627	8550	5301	0.62	650
75	75	10350	5175	0.50	616	9720	4860	0.50	644	9180	4590	0.50	672
77	64	8820	7938	0.90	549	8100	7290	0.90	582	7470	6723	0.9	605
77	68	9270	7231	0.78	571	8640	6739	0.78	599	8010	6248	0.78	633
77	72	9810	6475	0.66	594	9180	6059	0.66	627	8550	5643	0.66	650
77	75	10350	5589	0.54	616	9720	5249	0.54	644	9180	4957	0.54	672
79	64	8820	8291	0.94	549	8100	7614	0.94	582	7470	7022	0.94	605
79	68	9270	7601	0.82	571	8640	7085	0.82	599	8010	6568	0.82	633
79	72	9810	6867	0.70	594	9180	6426	0.70	627	8550	5985	0.70	650
79	75	10350	6003	0.58	616	9720	5638	0.58	644	9180	5324	0.58	672
79	79	10890	5009	0.46	638	10260	4720	0.46	666	9630	4430	0.46	694
81	64	8820	8644	0.98	549	8100	7938	0.98	582	7470	7321	0.98	605
81	68	9270	7972	0.86	571	8640	7430	0.86	599	8010	6889	0.86	633
81	72	9810	7259	0.74	594	9180	6793	0.74	627	8550	6327	0.74	650
81	75	10350	6417	0.62	616	9720	6026	0.62	644	9180	5692	0.62	672
81	79	10890	5445	0.50	638	10260	5130	0.50	666	9630	4815	0.50	694
82	64	8820	8820	1.00	549	8100	8100	1.00	582	7470	7470	1.00	605
82	68	9270	8343	0.90	571	8640	7776	0.90	599	8010	7209	0.90	633
82	72	9810	7652	0.78	594	9180	7160	0.78	627	8550	6669	0.78	650
82	75	10350	6831	0.66	616	9720	6415	0.66	644	9180	6059	0.66	672
82	79	10890	5881	0.54	638	10260	5540	0.54	666	9630	5200	0.54	694
84	64	8820	8820	1.00	549	8100	8100	1.00	582	7470	7470	1.00	605
84	68	9270	8714	0.94	571	8640	8122	0.94	599	8010	7529	0.94	633
84	72	9810	8044	0.82	594	9180	7528	0.82	627	8550	7011	0.82	650
84	75	10350	7245	0.70	616	9720	6804	0.70	644	9180	6426	0.70	672
84	79	10890	6316	0.58	638	10260	5951	0.58	666	9630	5585	0.58	694
86	64	8820	8820	1.00	549	8100	8100	1.00	582	7470	7470	1.00	605
86	68	9270	9085	0.98	571	8640	8467	0.98	599	8010	7850	0.98	633
86	72	9810	8437	0.86	594	9180	7895	0.86	627	8550	7353	0.86	650
86	75	10350	7659	0.74	616	9720	7193	0.74	644	9180	6793	0.74	672
86	79	10890	6752	0.62	638	10260	6361	0.62	666	9630	5971	0.62	694
88	64	8820	8820	1.00	549	8100	8100	1.00	582	7470	7470	1.00	605
88	68	9270	9270	1.00	571	8640	8640	1.00	599	8010	8010	1.00	633
88	72	9810	8829	0.90	594	9180	8262	0.90	627	8550	7695	0.90	650
88	75	10350	8073	0.78	616	9720	7582	0.78	644	9180	7160	0.78	672
88	79	10890	7187	0.66	638	10260	6772	0.66	666	9630	6356	0.66	694
90	64	8820	8820	1.00	549	8100	8100	1.00	582	7470	7470	1.00	605
90	68	9270	9270	1.00	571	8640	8640	1.00	599	8010	8010	1.00	633
90	72	9810	9221	0.94	594	9180	8629	0.94	627	8550	8037	0.94	650
90	75	10350	8487	0.82	616	9720	7970	0.82	644	9180	7528	0.82	672
90	79	10890	7623	0.70	638	10260	7182	0.70	666	9630	6741	0.70	694

NOTE CA: Capacity (Btu/h) SHF: Sensible heat factor DB: Dry-bulb temperature
SHC: Sensible heat capacity (Btu/h) P.C. : Power consumption (W) WB: Wet-bulb temperature

MUZ-FH12NA MUZ-FH12NAH

CAPACITY (Btu/h): 12000 INPUT (W): 870 SHF: 0.83

INDOOR DB (°F)	INDOOR WB (°F)	OUTDOOR DB (°F)															
		70				77				81				86			
		CA	SHC	SHF	P.C.	CA	SHC	SHF	P.C.	CA	SHC	SHF	P.C.	CA	SHC	SHF	P.C.
70	64	14100	9165	0.65	696	13500	8775	0.65	731	12960	8424	0.65	766	12480	8112	0.65	800
70	68	14700	7791	0.53	731	14100	7473	0.53	774	13680	7250	0.53	792	13200	6996	0.53	827
72	64	14100	9729	0.69	696	13500	9315	0.69	731	12960	8942	0.69	766	12480	8611	0.69	800
72	68	14700	8379	0.57	731	14100	8037	0.57	774	13680	7798	0.57	792	13200	7524	0.57	827
72	72	15300	6885	0.45	757	14760	6642	0.45	805	14400	6480	0.45	827	13800	6210	0.45	861
73	64	14100	10293	0.73	696	13500	9855	0.73	731	12960	9461	0.73	766	12480	9110	0.73	800
73	68	14700	8967	0.61	731	14100	8601	0.61	774	13680	8345	0.61	792	13200	8052	0.61	827
73	72	15300	7497	0.49	757	14760	7232	0.49	805	14400	7056	0.49	827	13800	6762	0.49	861
75	64	14100	10857	0.77	696	13500	10395	0.77	731	12960	9979	0.77	766	12480	9610	0.77	800
75	68	14700	9555	0.65	731	14100	9165	0.65	774	13680	8892	0.65	792	13200	8580	0.65	827
75	72	15300	8109	0.53	757	14760	7823	0.53	805	14400	7632	0.53	827	13800	7314	0.53	861
75	75	16080	6593	0.41	792	15480	6347	0.41	835	15120	6199	0.41	861	14640	6002	0.41	905
77	64	14100	11421	0.81	696	13500	10935	0.81	731	12960	10498	0.81	766	12480	10109	0.81	800
77	68	14700	10143	0.69	731	14100	9729	0.69	774	13680	9439	0.69	792	13200	9108	0.69	827
77	72	15300	8721	0.57	757	14760	8413	0.57	805	14400	8208	0.57	827	13800	7866	0.57	861
77	75	16080	7236	0.45	792	15480	6966	0.45	835	15120	6804	0.45	861	14640	6588	0.45	905
79	64	14100	11985	0.85	696	13500	11475	0.85	731	12960	11016	0.85	766	12480	10608	0.85	800
79	68	14700	10731	0.73	731	14100	10293	0.73	774	13680	9986	0.73	792	13200	9636	0.73	827
79	72	15300	9333	0.61	757	14760	9004	0.61	805	14400	8784	0.61	827	13800	8418	0.61	861
79	75	16080	7879	0.49	792	15480	7585	0.49	835	15120	7409	0.49	861	14640	7174	0.49	905
79	79	16560	6127	0.37	835	16080	5950	0.37	879	15840	5861	0.37	905	15360	5683	0.37	931
81	64	14100	12549	0.89	696	13500	12015	0.89	731	12960	11534	0.89	766	12480	11107	0.89	800
81	68	14700	11319	0.77	731	14100	10857	0.77	774	13680	10534	0.77	792	13200	10164	0.77	827
81	72	15300	9945	0.65	757	14760	9594	0.65	805	14400	9360	0.65	827	13800	8970	0.65	861
81	75	16080	8522	0.53	792	15480	8204	0.53	835	15120	8014	0.53	861	14640	7759	0.53	905
81	79	16560	6790	0.41	835	16080	6593	0.41	879	15840	6494	0.41	905	15360	6298	0.41	931
82	64	14100	13113	0.93	696	13500	12555	0.93	731	12960	12053	0.93	766	12480	11606	0.93	800
82	68	14700	11907	0.81	731	14100	11421	0.81	774	13680	11081	0.81	792	13200	10692	0.81	827
82	72	15300	10557	0.69	757	14760	10184	0.69	805	14400	9936	0.69	827	13800	9522	0.69	861
82	75	16080	9166	0.57	792	15480	8824	0.57	835	15120	8618	0.57	861	14640	8345	0.57	905
82	79	16560	7452	0.45	835	16080	7236	0.45	879	15840	7128	0.45	905	15360	6912	0.45	931
84	64	14100	13677	0.97	696	13500	13095	0.97	731	12960	12571	0.97	766	12480	12106	0.97	800
84	68	14700	12495	0.85	731	14100	11985	0.85	774	13680	11628	0.85	792	13200	11220	0.85	827
84	72	15300	11169	0.73	757	14760	10775	0.73	805	14400	10512	0.73	827	13800	10074	0.73	861
84	75	16080	9809	0.61	792	15480	9443	0.61	835	15120	9223	0.61	861	14640	8930	0.61	905
84	79	16560	8114	0.49	835	16080	7879	0.49	879	15840	7762	0.49	905	15360	7526	0.49	931
86	64	14100	14100	1.00	696	13500	13500	1.00	731	12960	12960	1.00	766	12480	12480	1.00	800
86	68	14700	13083	0.89	731	14100	12549	0.89	774	13680	12175	0.89	792	13200	11748	0.89	827
86	72	15300	11781	0.77	757	14760	11365	0.77	805	14400	11088	0.77	827	13800	10626	0.77	861
86	75	16080	10452	0.65	792	15480	10062	0.65	835	15120	9828	0.65	861	14640	9516	0.65	905
86	79	16560	8777	0.53	835	16080	8522	0.53	879	15840	8395	0.53	905	15360	8141	0.53	931
88	64	14100	14100	1.00	696	13500	13500	1.00	731	12960	12960	1.00	766	12480	12480	1.00	800
88	68	14700	13671	0.93	731	14100	13113	0.93	774	13680	12722	0.93	792	13200	12276	0.93	827
88	72	15300	12393	0.81	757	14760	11956	0.81	805	14400	11664	0.81	827	13800	11178	0.81	861
88	75	16080	11095	0.69	792	15480	10681	0.69	835	15120	10433	0.69	861	14640	10102	0.69	905
88	79	16560	9439	0.57	835	16080	9166	0.57	879	15840	9029	0.57	905	15360	8755	0.57	931
90	64	14100	14100	1.00	696	13500	13500	1.00	731	12960	12960	1.00	766	12480	12480	1.00	800
90	68	14700	14259	0.97	731	14100	13677	0.97	774	13680	13270	0.97	792	13200	12804	0.97	827
90	72	15300	13005	0.85	757	14760	12546	0.85	805	14400	12240	0.85	827	13800	11730	0.85	861
90	75	16080	11738	0.73	792	15480	11300	0.73	835	15120	11038	0.73	861	14640	10687	0.73	905
90	79	16560	10102	0.61	835	16080	9809	0.61	879	15840	9662	0.61	905	15360	9370	0.61	931

NOTE CA: Capacity (Btu/h) SHF: Sensible heat factor DB: Dry-bulb temperature
SHC: Sensible heat capacity (Btu/h) P.C. : Power consumption (W) WB: Wet-bulb temperature

MUZ-FH12NA MUZ-FH12NAH

CAPACITY (Btu/h): 12000 INPUT (W): 870 SHF: 0.83

INDOOR DB (°F)	INDOOR WB (°F)	OUTDOOR DB (°F)											
		95				104				115			
		CA	SHC	SHF	P.C.	CA	SHC	SHF	P.C.	CA	SHC	SHF	P.C.
70	64	11760	7644	0.65	853	10800	7020	0.65	905	9960	6474	0.65	940
70	68	12360	6551	0.53	887	11520	6106	0.53	931	10680	5660	0.53	983
72	64	11760	8114	0.69	853	10800	7452	0.69	905	9960	6872	0.69	940
72	68	12360	7045	0.57	887	11520	6566	0.57	931	10680	6088	0.57	983
72	72	13080	5886	0.45	922	12240	5508	0.45	974	11400	5130	0.45	1009
73	64	11760	8585	0.73	853	10800	7884	0.73	905	9960	7271	0.73	940
73	68	12360	7540	0.61	887	11520	7027	0.61	931	10680	6515	0.61	983
73	72	13080	6409	0.49	922	12240	5998	0.49	974	11400	5586	0.49	1009
75	64	11760	9055	0.77	853	10800	8316	0.77	905	9960	7669	0.77	940
75	68	12360	8034	0.65	887	11520	7488	0.65	931	10680	6942	0.65	983
75	72	13080	6932	0.53	922	12240	6487	0.53	974	11400	6042	0.53	1009
75	75	13800	5658	0.41	957	12960	5314	0.41	1001	12240	5018	0.41	1044
77	64	11760	9526	0.81	853	10800	8748	0.81	905	9960	8068	0.81	940
77	68	12360	8528	0.69	887	11520	7949	0.69	931	10680	7369	0.69	983
77	72	13080	7456	0.57	922	12240	6977	0.57	974	11400	6498	0.57	1009
77	75	13800	6210	0.45	957	12960	5832	0.45	1001	12240	5508	0.45	1044
79	64	11760	9996	0.85	853	10800	9180	0.85	905	9960	8466	0.85	940
79	68	12360	9023	0.73	887	11520	8410	0.73	931	10680	7796	0.73	983
79	72	13080	7979	0.61	922	12240	7466	0.61	974	11400	6954	0.61	1009
79	75	13800	6762	0.49	957	12960	6350	0.49	1001	12240	5998	0.49	1044
79	79	14520	5372	0.37	992	13680	5062	0.37	1035	12840	4751	0.37	1079
81	64	11760	10466	0.89	853	10800	9612	0.89	905	9960	8864	0.89	940
81	68	12360	9517	0.77	887	11520	8870	0.77	931	10680	8224	0.77	983
81	72	13080	8502	0.65	922	12240	7956	0.65	974	11400	7410	0.65	1009
81	75	13800	7314	0.53	957	12960	6869	0.53	1001	12240	6487	0.53	1044
81	79	14520	5953	0.41	992	13680	5609	0.41	1035	12840	5264	0.41	1079
82	64	11760	10937	0.93	853	10800	10044	0.93	905	9960	9263	0.93	940
82	68	12360	10012	0.81	887	11520	9331	0.81	931	10680	8651	0.81	983
82	72	13080	9025	0.69	922	12240	8446	0.69	974	11400	7866	0.69	1009
82	75	13800	7866	0.57	957	12960	7387	0.57	1001	12240	6977	0.57	1044
82	79	14520	6534	0.45	992	13680	6156	0.45	1035	12840	5778	0.45	1079
84	64	11760	11407	0.97	853	10800	10476	0.97	905	9960	9661	0.97	940
84	68	12360	10506	0.85	887	11520	9792	0.85	931	10680	9078	0.85	983
84	72	13080	9548	0.73	922	12240	8935	0.73	974	11400	8322	0.73	1009
84	75	13800	8418	0.61	957	12960	7906	0.61	1001	12240	7466	0.61	1044
84	79	14520	7115	0.49	992	13680	6703	0.49	1035	12840	6292	0.49	1079
86	64	11760	11760	1.00	853	10800	10800	1.00	905	9960	9960	1.00	940
86	68	12360	11000	0.89	887	11520	10253	0.89	931	10680	9505	0.89	983
86	72	13080	10072	0.77	922	12240	9425	0.77	974	11400	8778	0.77	1009
86	75	13800	8970	0.65	957	12960	8424	0.65	1001	12240	7956	0.65	1044
86	79	14520	7696	0.53	992	13680	7250	0.53	1035	12840	6805	0.53	1079
88	64	11760	11760	1.00	853	10800	10800	1.00	905	9960	9960	1.00	940
88	68	12360	11495	0.93	887	11520	10714	0.93	931	10680	9932	0.93	983
88	72	13080	10595	0.81	922	12240	9914	0.81	974	11400	9234	0.81	1009
88	75	13800	9522	0.69	957	12960	8942	0.69	1001	12240	8446	0.69	1044
88	79	14520	8276	0.57	992	13680	7798	0.57	1035	12840	7319	0.57	1079
90	64	11760	11760	1.00	853	10800	10800	1.00	905	9960	9960	1.00	940
90	68	12360	11989	0.97	887	11520	11174	0.97	931	10680	10360	0.97	983
90	72	13080	11118	0.85	922	12240	10404	0.85	974	11400	9690	0.85	1009
90	75	13800	10074	0.73	957	12960	9461	0.73	1001	12240	8935	0.73	1044
90	79	14520	8857	0.61	992	13680	8345	0.61	1035	12840	7832	0.61	1079

NOTE CA: Capacity (Btu/h) SHF: Sensible heat factor DB: Dry-bulb temperature
SHC: Sensible heat capacity (Btu/h) P.C. : Power consumption (W) WB: Wet-bulb temperature

MUZ-FH15NA MUZ-FH15NAH

CAPACITY (Btu/h): 15000 INPUT (W): 1200 SHF: 0.70

INDOOR DB (°F)	INDOOR WB (°F)	OUTDOOR DB (°F)															
		70				77				81				86			
		CA	SHC	SHF	P.C.	CA	SHC	SHF	P.C.	CA	SHC	SHF	P.C.	CA	SHC	SHF	P.C.
70	64	17625	9165	0.52	960	16875	8775	0.52	1008	16200	8424	0.52	1056	15600	8112	0.52	1104
70	68	18375	7350	0.40	1008	17625	7050	0.40	1068	17100	6840	0.40	1092	16500	6600	0.40	1140
72	64	17625	9870	0.56	960	16875	9450	0.56	1008	16200	9072	0.56	1056	15600	8736	0.56	1104
72	68	18375	8085	0.44	1008	17625	7755	0.44	1068	17100	7524	0.44	1092	16500	7260	0.44	1140
72	72	19125	6120	0.32	1044	18450	5904	0.32	1110	18000	5760	0.32	1140	17250	5520	0.32	1188
73	64	17625	10575	0.60	960	16875	10125	0.60	1008	16200	9720	0.60	1056	15600	9360	0.60	1104
73	68	18375	8820	0.48	1008	17625	8460	0.48	1068	17100	8208	0.48	1092	16500	7920	0.48	1140
73	72	19125	6885	0.36	1044	18450	6642	0.36	1110	18000	6480	0.36	1140	17250	6210	0.36	1188
75	64	17625	11280	0.64	960	16875	10800	0.64	1008	16200	10368	0.64	1056	15600	9984	0.64	1104
75	68	18375	9555	0.52	1008	17625	9165	0.52	1068	17100	8892	0.52	1092	16500	8580	0.52	1140
75	72	19125	7650	0.40	1044	18450	7380	0.40	1110	18000	7200	0.40	1140	17250	6900	0.40	1188
75	75	20100	5628	0.28	1092	19350	5418	0.28	1152	18900	5292	0.28	1188	18300	5124	0.28	1248
77	64	17625	11985	0.68	960	16875	11475	0.68	1008	16200	11016	0.68	1056	15600	10608	0.68	1104
77	68	18375	10290	0.56	1008	17625	9870	0.56	1068	17100	9576	0.56	1092	16500	9240	0.56	1140
77	72	19125	8415	0.44	1044	18450	8118	0.44	1110	18000	7920	0.44	1140	17250	7590	0.44	1188
77	75	20100	6432	0.32	1092	19350	6192	0.32	1152	18900	6048	0.32	1188	18300	5856	0.32	1248
79	64	17625	12690	0.72	960	16875	12150	0.72	1008	16200	11664	0.72	1056	15600	11232	0.72	1104
79	68	18375	11025	0.60	1008	17625	10575	0.60	1068	17100	10260	0.60	1092	16500	9900	0.60	1140
79	72	19125	9180	0.48	1044	18450	8856	0.48	1110	18000	8640	0.48	1140	17250	8280	0.48	1188
79	75	20100	7236	0.36	1092	19350	6966	0.36	1152	18900	6804	0.36	1188	18300	6588	0.36	1248
79	79	20700	4968	0.24	1152	20100	4824	0.24	1212	19800	4752	0.24	1248	19200	4608	0.24	1284
81	64	17625	13395	0.76	960	16875	12825	0.76	1008	16200	12312	0.76	1056	15600	11856	0.76	1104
81	68	18375	11760	0.64	1008	17625	11280	0.64	1068	17100	10944	0.64	1092	16500	10560	0.64	1140
81	72	19125	9945	0.52	1044	18450	9594	0.52	1110	18000	9360	0.52	1140	17250	8970	0.52	1188
81	75	20100	8040	0.40	1092	19350	7740	0.40	1152	18900	7560	0.40	1188	18300	7320	0.40	1248
81	79	20700	5796	0.28	1152	20100	5628	0.28	1212	19800	5544	0.28	1248	19200	5376	0.28	1284
82	64	17625	14100	0.80	960	16875	13500	0.80	1008	16200	12960	0.80	1056	15600	12480	0.80	1104
82	68	18375	12495	0.68	1008	17625	11985	0.68	1068	17100	11628	0.68	1092	16500	11220	0.68	1140
82	72	19125	10710	0.56	1044	18450	10332	0.56	1110	18000	10080	0.56	1140	17250	9660	0.56	1188
82	75	20100	8844	0.44	1092	19350	8514	0.44	1152	18900	8316	0.44	1188	18300	8052	0.44	1248
82	79	20700	6624	0.32	1152	20100	6432	0.32	1212	19800	6336	0.32	1248	19200	6144	0.32	1284
84	64	17625	14805	0.84	960	16875	14175	0.84	1008	16200	13608	0.84	1056	15600	13104	0.84	1104
84	68	18375	13230	0.72	1008	17625	12690	0.72	1068	17100	12312	0.72	1092	16500	11880	0.72	1140
84	72	19125	11475	0.60	1044	18450	11070	0.60	1110	18000	10800	0.60	1140	17250	10350	0.60	1188
84	75	20100	9648	0.48	1092	19350	9288	0.48	1152	18900	9072	0.48	1188	18300	8784	0.48	1248
84	79	20700	7452	0.36	1152	20100	7236	0.36	1212	19800	7128	0.36	1248	19200	6912	0.36	1284
86	64	17625	15510	0.88	960	16875	14850	0.88	1008	16200	14256	0.88	1056	15600	13728	0.88	1104
86	68	18375	13965	0.76	1008	17625	13395	0.76	1068	17100	12996	0.76	1092	16500	12540	0.76	1140
86	72	19125	12240	0.64	1044	18450	11808	0.64	1110	18000	11520	0.64	1140	17250	11040	0.64	1188
86	75	20100	10452	0.52	1092	19350	10062	0.52	1152	18900	9828	0.52	1188	18300	9516	0.52	1248
86	79	20700	8280	0.40	1152	20100	8040	0.40	1212	19800	7920	0.40	1248	19200	7680	0.40	1284
88	64	17625	16215	0.92	960	16875	15525	0.92	1008	16200	14904	0.92	1056	15600	14352	0.92	1104
88	68	18375	14700	0.80	1008	17625	14100	0.80	1068	17100	13680	0.80	1092	16500	13200	0.80	1140
88	72	19125	13005	0.68	1044	18450	12546	0.68	1110	18000	12240	0.68	1140	17250	11730	0.68	1188
88	75	20100	11256	0.56	1092	19350	10836	0.56	1152	18900	10584	0.56	1188	18300	10248	0.56	1248
88	79	20700	9108	0.44	1152	20100	8844	0.44	1212	19800	8712	0.44	1248	19200	8448	0.44	1284
90	64	17625	16920	0.96	960	16875	16200	0.96	1008	16200	15552	0.96	1056	15600	14976	0.96	1104
90	68	18375	15435	0.84	1008	17625	14805	0.84	1068	17100	14364	0.84	1092	16500	13860	0.84	1140
90	72	19125	13770	0.72	1044	18450	13284	0.72	1110	18000	12960	0.72	1140	17250	12420	0.72	1188
90	75	20100	12060	0.60	1092	19350	11610	0.60	1152	18900	11340	0.60	1188	18300	10980	0.60	1248
90	79	20700	9936	0.48	1152	20100	9648	0.48	1212	19800	9504	0.48	1248	19200	9216	0.48	1284

NOTE CA: Capacity (Btu/h) SHF: Sensible heat factor DB: Dry-bulb temperature
SHC: Sensible heat capacity (Btu/h) P.C. : Power consumption (W) WB: Wet-bulb temperature

MUZ-FH15NA MUZ-FH15NAH

CAPACITY (Btu/h): 15000 INPUT (W): 1200 SHF: 0.70

INDOOR DB (°F)	INDOOR WB (°F)	OUTDOOR DB (°F)											
		95				104				115			
		CA	SHC	SHF	P.C.	CA	SHC	SHF	P.C.	CA	SHC	SHF	P.C.
70	64	14700	7644	0.52	1176	13500	7020	0.52	1248	12450	6474	0.52	1296
70	68	15450	6180	0.40	1224	14400	5760	0.40	1284	13350	5340	0.40	1356
72	64	14700	8232	0.56	1176	13500	7560	0.56	1248	12450	6972	0.56	1296
72	68	15450	6798	0.44	1224	14400	6336	0.44	1284	13350	5874	0.44	1356
72	72	16350	5232	0.32	1272	15300	4896	0.32	1344	14250	4560	0.32	1392
73	64	14700	8820	0.60	1176	13500	8100	0.60	1248	12450	7470	0.60	1296
73	68	15450	7416	0.48	1224	14400	6912	0.48	1284	13350	6408	0.48	1356
73	72	16350	5886	0.36	1272	15300	5508	0.36	1344	14250	5130	0.36	1392
75	64	14700	9408	0.64	1176	13500	8640	0.64	1248	12450	7968	0.64	1296
75	68	15450	8034	0.52	1224	14400	7488	0.52	1284	13350	6942	0.52	1356
75	72	16350	6540	0.40	1272	15300	6120	0.40	1344	14250	5700	0.40	1392
75	75	17250	4830	0.28	1320	16200	4536	0.28	1380	15300	4284	0.28	1440
77	64	14700	9996	0.68	1176	13500	9180	0.68	1248	12450	8466	0.68	1296
77	68	15450	8652	0.56	1224	14400	8064	0.56	1284	13350	7476	0.56	1356
77	72	16350	7194	0.44	1272	15300	6732	0.44	1344	14250	6270	0.44	1392
77	75	17250	5520	0.32	1320	16200	5184	0.32	1380	15300	4896	0.32	1440
79	64	14700	10584	0.72	1176	13500	9720	0.72	1248	12450	8964	0.72	1296
79	68	15450	9270	0.60	1224	14400	8640	0.60	1284	13350	8010	0.60	1356
79	72	16350	7848	0.48	1272	15300	7344	0.48	1344	14250	6840	0.48	1392
79	75	17250	6210	0.36	1320	16200	5832	0.36	1380	15300	5508	0.36	1440
79	79	18150	4356	0.24	1368	17100	4104	0.24	1428	16050	3852	0.24	1488
81	64	14700	11172	0.76	1176	13500	10260	0.76	1248	12450	9462	0.76	1296
81	68	15450	9888	0.64	1224	14400	9216	0.64	1284	13350	8544	0.64	1356
81	72	16350	8502	0.52	1272	15300	7956	0.52	1344	14250	7410	0.52	1392
81	75	17250	6900	0.40	1320	16200	6480	0.40	1380	15300	6120	0.40	1440
81	79	18150	5082	0.28	1368	17100	4788	0.28	1428	16050	4494	0.28	1488
82	64	14700	11760	0.80	1176	13500	10800	0.80	1248	12450	9960	0.80	1296
82	68	15450	10506	0.68	1224	14400	9792	0.68	1284	13350	9078	0.68	1356
82	72	16350	9156	0.56	1272	15300	8568	0.56	1344	14250	7980	0.56	1392
82	75	17250	7590	0.44	1320	16200	7128	0.44	1380	15300	6732	0.44	1440
82	79	18150	5808	0.32	1368	17100	5472	0.32	1428	16050	5136	0.32	1488
84	64	14700	12348	0.84	1176	13500	11340	0.84	1248	12450	10458	0.84	1296
84	68	15450	11124	0.72	1224	14400	10368	0.72	1284	13350	9612	0.72	1356
84	72	16350	9810	0.60	1272	15300	9180	0.60	1344	14250	8550	0.60	1392
84	75	17250	8280	0.48	1320	16200	7776	0.48	1380	15300	7344	0.48	1440
84	79	18150	6534	0.36	1368	17100	6156	0.36	1428	16050	5778	0.36	1488
86	64	14700	12936	0.88	1176	13500	11880	0.88	1248	12450	10956	0.88	1296
86	68	15450	11742	0.76	1224	14400	10944	0.76	1284	13350	10146	0.76	1356
86	72	16350	10464	0.64	1272	15300	9792	0.64	1344	14250	9120	0.64	1392
86	75	17250	8970	0.52	1320	16200	8424	0.52	1380	15300	7956	0.52	1440
86	79	18150	7260	0.40	1368	17100	6840	0.40	1428	16050	6420	0.40	1488
88	64	14700	13524	0.92	1176	13500	12420	0.92	1248	12450	11454	0.92	1296
88	68	15450	12360	0.80	1224	14400	11520	0.80	1284	13350	10680	0.80	1356
88	72	16350	11118	0.68	1272	15300	10404	0.68	1344	14250	9690	0.68	1392
88	75	17250	9660	0.56	1320	16200	9072	0.56	1380	15300	8568	0.56	1440
88	79	18150	7986	0.44	1368	17100	7524	0.44	1428	16050	7062	0.44	1488
90	64	14700	14112	0.96	1176	13500	12960	0.96	1248	12450	11952	0.96	1296
90	68	15450	12978	0.84	1224	14400	12096	0.84	1284	13350	11214	0.84	1356
90	72	16350	11772	0.72	1272	15300	11016	0.72	1344	14250	10260	0.72	1392
90	75	17250	10350	0.60	1320	16200	9720	0.60	1380	15300	9180	0.60	1440
90	79	18150	8712	0.48	1368	17100	8208	0.48	1428	16050	7704	0.48	1488

NOTE CA: Capacity (Btu/h) SHF: Sensible heat factor DB: Dry-bulb temperature
SHC: Sensible heat capacity (Btu/h) P.C. : Power consumption (W) WB: Wet-bulb temperature

MUZ-FH18NA2 MUZ-FH18NAH2

CAPACITY (Btu/h): 17200 INPUT (W): 1375 SHF: 0.69

INDOOR DB (°F)	INDOOR WB (°F)	OUTDOOR DB (°F)															
		70				77				81				86			
		CA	SHC	SHF	P.C.	CA	SHC	SHF	P.C.	CA	SHC	SHF	P.C.	CA	SHC	SHF	P.C.
70	64	20210	10307	0.51	1100	19350	9869	0.51	1155	18576	9474	0.51	1210	17888	9123	0.51	1265
70	68	21070	8217	0.39	1155	20210	7882	0.39	1224	19608	7647	0.39	1251	18920	7379	0.39	1306
72	64	20210	11116	0.55	1100	19350	10643	0.55	1155	18576	10217	0.55	1210	17888	9838	0.55	1265
72	68	21070	9060	0.43	1155	20210	8690	0.43	1224	19608	8431	0.43	1251	18920	8136	0.43	1306
72	72	21930	6798	0.31	1196	21156	6558	0.31	1272	20640	6398	0.31	1306	19780	6132	0.31	1361
73	64	20210	11924	0.59	1100	19350	11417	0.59	1155	18576	10960	0.59	1210	17888	10554	0.59	1265
73	68	21070	9903	0.47	1155	20210	9499	0.47	1224	19608	9216	0.47	1251	18920	8892	0.47	1306
73	72	21930	7676	0.35	1196	21156	7405	0.35	1272	20640	7224	0.35	1306	19780	6923	0.35	1361
75	64	20210	12732	0.63	1100	19350	12191	0.63	1155	18576	11703	0.63	1210	17888	11269	0.63	1265
75	68	21070	10746	0.51	1155	20210	10307	0.51	1224	19608	10000	0.51	1251	18920	9649	0.51	1306
75	72	21930	8553	0.39	1196	21156	8251	0.39	1272	20640	8050	0.39	1306	19780	7714	0.39	1361
75	75	23048	6223	0.27	1251	22188	5991	0.27	1320	21672	5851	0.27	1361	20984	5666	0.27	1430
77	64	20210	13541	0.67	1100	19350	12965	0.67	1155	18576	12446	0.67	1210	17888	11985	0.67	1265
77	68	21070	11589	0.55	1155	20210	11116	0.55	1224	19608	10784	0.55	1251	18920	10406	0.55	1306
77	72	21930	9430	0.43	1196	21156	9097	0.43	1272	20640	8875	0.43	1306	19780	8505	0.43	1361
77	75	23048	7145	0.31	1251	22188	6878	0.31	1320	21672	6718	0.31	1361	20984	6505	0.31	1430
79	64	20210	14349	0.71	1100	19350	13739	0.71	1155	18576	13189	0.71	1210	17888	12700	0.71	1265
79	68	21070	12431	0.59	1155	20210	11924	0.59	1224	19608	11569	0.59	1251	18920	11163	0.59	1306
79	72	21930	10307	0.47	1196	21156	9943	0.47	1272	20640	9701	0.47	1306	19780	9297	0.47	1361
79	75	23048	8067	0.35	1251	22188	7766	0.35	1320	21672	7585	0.35	1361	20984	7344	0.35	1430
79	79	23736	5459	0.23	1320	23048	5301	0.23	1389	22704	5222	0.23	1430	22016	5064	0.23	1471
81	64	20210	15158	0.75	1100	19350	14513	0.75	1155	18576	13932	0.75	1210	17888	13416	0.75	1265
81	68	21070	13274	0.63	1155	20210	12732	0.63	1224	19608	12353	0.63	1251	18920	11920	0.63	1306
81	72	21930	11184	0.51	1196	21156	10790	0.51	1272	20640	10526	0.51	1306	19780	10088	0.51	1361
81	75	23048	8989	0.39	1251	22188	8653	0.39	1320	21672	8452	0.39	1361	20984	8184	0.39	1430
81	79	23736	6409	0.27	1320	23048	6223	0.27	1389	22704	6130	0.27	1430	22016	5944	0.27	1471
82	64	20210	15966	0.79	1100	19350	15287	0.79	1155	18576	14675	0.79	1210	17888	14132	0.79	1265
82	68	21070	14117	0.67	1155	20210	13541	0.67	1224	19608	13137	0.67	1251	18920	12676	0.67	1306
82	72	21930	12062	0.55	1196	21156	11636	0.55	1272	20640	11352	0.55	1306	19780	10879	0.55	1361
82	75	23048	9911	0.43	1251	22188	9541	0.43	1320	21672	9319	0.43	1361	20984	9023	0.43	1430
82	79	23736	7358	0.31	1320	23048	7145	0.31	1389	22704	7038	0.31	1430	22016	6825	0.31	1471
84	64	20210	16774	0.83	1100	19350	16061	0.83	1155	18576	15418	0.83	1210	17888	14847	0.83	1265
84	68	21070	14960	0.71	1155	20210	14349	0.71	1224	19608	13922	0.71	1251	18920	13433	0.71	1306
84	72	21930	12939	0.59	1196	21156	12482	0.59	1272	20640	12178	0.59	1306	19780	11670	0.59	1361
84	75	23048	10833	0.47	1251	22188	10428	0.47	1320	21672	10186	0.47	1361	20984	9862	0.47	1430
84	79	23736	8308	0.35	1320	23048	8067	0.35	1389	22704	7946	0.35	1430	22016	7706	0.35	1471
86	64	20210	17583	0.87	1100	19350	16835	0.87	1155	18576	16161	0.87	1210	17888	15563	0.87	1265
86	68	21070	15803	0.75	1155	20210	15158	0.75	1224	19608	14706	0.75	1251	18920	14190	0.75	1306
86	72	21930	13816	0.63	1196	21156	13328	0.63	1272	20640	13003	0.63	1306	19780	12461	0.63	1361
86	75	23048	11754	0.51	1251	22188	11316	0.51	1320	21672	11053	0.51	1361	20984	10702	0.51	1430
86	79	23736	9257	0.39	1320	23048	8989	0.39	1389	22704	8855	0.39	1430	22016	8586	0.39	1471
88	64	20210	18391	0.91	1100	19350	17609	0.91	1155	18576	16904	0.91	1210	17888	16278	0.91	1265
88	68	21070	16645	0.79	1155	20210	15966	0.79	1224	19608	15490	0.79	1251	18920	14947	0.79	1306
88	72	21930	14693	0.67	1196	21156	14175	0.67	1272	20640	13829	0.67	1306	19780	13253	0.67	1361
88	75	23048	12676	0.55	1251	22188	12203	0.55	1320	21672	11920	0.55	1361	20984	11541	0.55	1430
88	79	23736	10206	0.43	1320	23048	9911	0.43	1389	22704	9763	0.43	1430	22016	9467	0.43	1471
90	64	20210	19200	0.95	1100	19350	18383	0.95	1155	18576	17647	0.95	1210	17888	16994	0.95	1265
90	68	21070	17488	0.83	1155	20210	16774	0.83	1224	19608	16275	0.83	1251	18920	15704	0.83	1306
90	72	21930	15570	0.71	1196	21156	15021	0.71	1272	20640	14654	0.71	1306	19780	14044	0.71	1361
90	75	23048	13598	0.59	1251	22188	13091	0.59	1320	21672	12786	0.59	1361	20984	12381	0.59	1430
90	79	23736	11156	0.47	1320	23048	10833	0.47	1389	22704	10671	0.47	1430	22016	10348	0.47	1471

NOTE CA: Capacity (Btu/h) SHF: Sensible heat factor DB: Dry-bulb temperature
SHC: Sensible heat capacity (Btu/h) P.C. : Power consumption (W) WB: Wet-bulb temperature

MUZ-FH18NA2 MUZ-FH18NAH2

CAPACITY (Btu/h): 17200 INPUT (W): 1375 SHF: 0.69

INDOOR DB (°F)	INDOOR WB (°F)	OUTDOOR DB (°F)											
		95				104				115			
		CA	SHC	SHF	P.C.	CA	SHC	SHF	P.C.	CA	SHC	SHF	P.C.
70	64	16856	8597	0.51	1348	15480	7895	0.51	1430	14276	7281	0.51	1485
70	68	17716	6909	0.39	1403	16512	6440	0.39	1471	15308	5970	0.39	1554
72	64	16856	9271	0.55	1348	15480	8514	0.55	1430	14276	7852	0.55	1485
72	68	17716	7618	0.43	1403	16512	7100	0.43	1471	15308	6582	0.43	1554
72	72	18748	5812	0.31	1458	17544	5439	0.31	1540	16340	5065	0.31	1595
73	64	16856	9945	0.59	1348	15480	9133	0.59	1430	14276	8423	0.59	1485
73	68	17716	8327	0.47	1403	16512	7761	0.47	1471	15308	7195	0.47	1554
73	72	18748	6562	0.35	1458	17544	6140	0.35	1540	16340	5719	0.35	1595
75	64	16856	10619	0.63	1348	15480	9752	0.63	1430	14276	8994	0.63	1485
75	68	17716	9035	0.51	1403	16512	8421	0.51	1471	15308	7807	0.51	1554
75	72	18748	7312	0.39	1458	17544	6842	0.39	1540	16340	6373	0.39	1595
75	75	19780	5341	0.27	1513	18576	5016	0.27	1581	17544	4737	0.27	1650
77	64	16856	11294	0.67	1348	15480	10372	0.67	1430	14276	9565	0.67	1485
77	68	17716	9744	0.55	1403	16512	9082	0.55	1471	15308	8419	0.55	1554
77	72	18748	8062	0.43	1458	17544	7544	0.43	1540	16340	7026	0.43	1595
77	75	19780	6132	0.31	1513	18576	5759	0.31	1581	17544	5439	0.31	1650
79	64	16856	11968	0.71	1348	15480	10991	0.71	1430	14276	10136	0.71	1485
79	68	17716	10452	0.59	1403	16512	9742	0.59	1471	15308	9032	0.59	1554
79	72	18748	8812	0.47	1458	17544	8246	0.47	1540	16340	7680	0.47	1595
79	75	19780	6923	0.35	1513	18576	6502	0.35	1581	17544	6140	0.35	1650
79	79	20812	4787	0.23	1568	19608	4510	0.23	1636	18404	4233	0.23	1705
81	64	16856	12642	0.75	1348	15480	11610	0.75	1430	14276	10707	0.75	1485
81	68	17716	11161	0.63	1403	16512	10403	0.63	1471	15308	9644	0.63	1554
81	72	18748	9561	0.51	1458	17544	8947	0.51	1540	16340	8333	0.51	1595
81	75	19780	7714	0.39	1513	18576	7245	0.39	1581	17544	6842	0.39	1650
81	79	20812	5619	0.27	1568	19608	5294	0.27	1636	18404	4969	0.27	1705
82	64	16856	13316	0.79	1348	15480	12229	0.79	1430	14276	11278	0.79	1485
82	68	17716	11870	0.67	1403	16512	11063	0.67	1471	15308	10256	0.67	1554
82	72	18748	10311	0.55	1458	17544	9649	0.55	1540	16340	8987	0.55	1595
82	75	19780	8505	0.43	1513	18576	7988	0.43	1581	17544	7544	0.43	1650
82	79	20812	6452	0.31	1568	19608	6078	0.31	1636	18404	5705	0.31	1705
84	64	16856	13990	0.83	1348	15480	12848	0.83	1430	14276	11849	0.83	1485
84	68	17716	12578	0.71	1403	16512	11724	0.71	1471	15308	10869	0.71	1554
84	72	18748	11061	0.59	1458	17544	10351	0.59	1540	16340	9641	0.59	1595
84	75	19780	9297	0.47	1513	18576	8731	0.47	1581	17544	8246	0.47	1650
84	79	20812	7284	0.35	1568	19608	6863	0.35	1636	18404	6441	0.35	1705
86	64	16856	14665	0.87	1348	15480	13468	0.87	1430	14276	12420	0.87	1485
86	68	17716	13287	0.75	1403	16512	12384	0.75	1471	15308	11481	0.75	1554
86	72	18748	11811	0.63	1458	17544	11053	0.63	1540	16340	10294	0.63	1595
86	75	19780	10088	0.51	1513	18576	9474	0.51	1581	17544	8947	0.51	1650
86	79	20812	8117	0.39	1568	19608	7647	0.39	1636	18404	7178	0.39	1705
88	64	16856	15339	0.91	1348	15480	14087	0.91	1430	14276	12991	0.91	1485
88	68	17716	13996	0.79	1403	16512	13044	0.79	1471	15308	12093	0.79	1554
88	72	18748	12561	0.67	1458	17544	11754	0.67	1540	16340	10948	0.67	1595
88	75	19780	10879	0.55	1513	18576	10217	0.55	1581	17544	9649	0.55	1650
88	79	20812	8949	0.43	1568	19608	8431	0.43	1636	18404	7914	0.43	1705
90	64	16856	16013	0.95	1348	15480	14706	0.95	1430	14276	13562	0.95	1485
90	68	17716	14704	0.83	1403	16512	13705	0.83	1471	15308	12706	0.83	1554
90	72	18748	13311	0.71	1458	17544	12456	0.71	1540	16340	11601	0.71	1595
90	75	19780	11670	0.59	1513	18576	10960	0.59	1581	17544	10351	0.59	1650
90	79	20812	9782	0.47	1568	19608	9216	0.47	1636	18404	8650	0.47	1705

NOTE CA: Capacity (Btu/h) SHF: Sensible heat factor DB: Dry-bulb temperature
SHC: Sensible heat capacity (Btu/h) P.C. : Power consumption (W) WB: Wet-bulb temperature

MUZ-FE09NAH

CAPACITY (Btu/h): 9000 INPUT: 580 W SHF: 0.76

Indoor intake air DB(ºF)	Indoor intake air WB(ºF)	Outdoor intake air DB(ºF)															
		70				77				81				86			
		CA	SHC	SHF	P.C.	CA	SHC	SHF	P.C.	CA	SHC	SHF	P.C.	CA	SHC	SHF	P.C.
70	64	10575	6134	0.58	464	10125	5873	0.58	487	9720	5638	0.58	510	9360	5429	0.58	534
70	68	11025	5072	0.46	487	10575	4865	0.46	516	10260	4720	0.46	528	9900	4554	0.46	551
72	64	10575	6557	0.62	464	10125	6278	0.62	487	9720	6026	0.62	510	9360	5803	0.62	534
72	68	11025	5513	0.50	487	10575	5288	0.50	516	10260	5130	0.50	528	9900	4950	0.50	551
72	72	11475	4361	0.38	505	11070	4207	0.38	537	10800	4104	0.38	551	10350	3933	0.38	574
73	64	10575	6980	0.66	464	10125	6683	0.66	487	9720	6415	0.66	510	9360	6178	0.66	534
73	68	11025	5954	0.54	487	10575	5711	0.54	516	10260	5540	0.54	528	9900	5346	0.54	551
73	72	11475	4820	0.42	505	11070	4649	0.42	537	10800	4536	0.42	551	10350	4347	0.42	574
75	64	10575	7403	0.70	464	10125	7088	0.70	487	9720	6804	0.70	510	9360	6552	0.70	534
75	68	11025	6395	0.58	487	10575	6134	0.58	516	10260	5951	0.58	528	9900	5742	0.58	551
75	72	11475	5279	0.46	505	11070	5092	0.46	537	10800	4968	0.46	551	10350	4761	0.46	574
75	75	12060	4100	0.34	528	11610	3947	0.34	557	11340	3856	0.34	574	10980	3733	0.34	603
77	64	10575	7826	0.74	464	10125	7493	0.74	487	9720	7193	0.74	510	9360	6926	0.74	534
77	68	11025	6836	0.62	487	10575	6557	0.62	516	10260	6361	0.62	528	9900	6138	0.62	551
77	72	11475	5738	0.50	505	11070	5535	0.50	537	10800	5400	0.50	551	10350	5175	0.50	574
77	75	12060	4583	0.38	528	11610	4412	0.38	557	11340	4309	0.38	574	10980	4172	0.38	603
79	64	10575	8249	0.78	464	10125	7898	0.78	487	9720	7582	0.78	510	9360	7301	0.78	534
79	68	11025	7277	0.66	487	10575	6980	0.66	516	10260	6772	0.66	528	9900	6534	0.66	551
79	72	11475	6197	0.54	505	11070	5978	0.54	537	10800	5832	0.54	551	10350	5589	0.54	574
79	75	12060	5065	0.42	528	11610	4876	0.42	557	11340	4763	0.42	574	10980	4612	0.42	603
79	79	12420	3726	0.30	557	12060	3618	0.30	586	11880	3564	0.30	603	11520	3456	0.30	621
81	64	10575	8672	0.82	464	10125	8303	0.82	487	9720	7970	0.82	510	9360	7675	0.82	534
81	68	11025	7718	0.70	487	10575	7403	0.70	516	10260	7182	0.70	528	9900	6930	0.70	551
81	72	11475	6656	0.58	505	11070	6421	0.58	537	10800	6264	0.58	551	10350	6003	0.58	574
81	75	12060	5548	0.46	528	11610	5341	0.46	557	11340	5216	0.46	574	10980	5051	0.46	603
81	79	12420	4223	0.34	557	12060	4100	0.34	586	11880	4039	0.34	603	11520	3917	0.34	621
82	64	10575	9095	0.86	464	10125	8708	0.86	487	9720	8359	0.86	510	9360	8050	0.86	534
82	68	11025	8159	0.74	487	10575	7826	0.74	516	10260	7592	0.74	528	9900	7326	0.74	551
82	72	11475	7115	0.62	505	11070	6863	0.62	537	10800	6696	0.62	551	10350	6417	0.62	574
82	75	12060	6030	0.50	528	11610	5805	0.50	557	11340	5670	0.50	574	10980	5490	0.50	603
82	79	12420	4720	0.38	557	12060	4583	0.38	586	11880	4514	0.38	603	11520	4378	0.38	621
84	64	10575	9518	0.90	464	10125	9113	0.90	487	9720	8748	0.90	510	9360	8424	0.90	534
84	68	11025	8600	0.78	487	10575	8249	0.78	516	10260	8003	0.78	528	9900	7722	0.78	551
84	72	11475	7574	0.66	505	11070	7306	0.66	537	10800	7128	0.66	551	10350	6831	0.66	574
84	75	12060	6512	0.54	528	11610	6269	0.54	557	11340	6124	0.54	574	10980	5929	0.54	603
84	79	12420	5216	0.42	557	12060	5065	0.42	586	11880	4990	0.42	603	11520	4838	0.42	621
86	64	10575	9941	0.94	464	10125	9518	0.94	487	9720	9137	0.94	510	9360	8798	0.94	534
86	68	11025	9041	0.82	487	10575	8672	0.82	516	10260	8413	0.82	528	9900	8118	0.82	551
86	72	11475	8033	0.70	505	11070	7749	0.70	537	10800	7560	0.70	551	10350	7245	0.70	574
86	75	12060	6995	0.58	528	11610	6734	0.58	557	11340	6577	0.58	574	10980	6368	0.58	603
86	79	12420	5713	0.46	557	12060	5548	0.46	586	11880	5465	0.46	603	11520	5299	0.46	621
88	64	10575	10364	0.98	464	10125	9923	0.98	487	9720	9526	0.98	510	9360	9173	0.98	534
88	68	11025	9482	0.86	487	10575	9095	0.86	516	10260	8824	0.86	528	9900	8514	0.86	551
88	72	11475	8492	0.74	505	11070	8192	0.74	537	10800	7992	0.74	551	10350	7659	0.74	574
88	75	12060	7477	0.62	528	11610	7198	0.62	557	11340	7031	0.62	574	10980	6808	0.62	603
88	79	12420	6210	0.50	557	12060	6030	0.50	586	11880	5940	0.50	603	11520	5760	0.50	621
90	64	10575	10575	1.00	464	10125	10125	1.00	487	9720	9720	1.00	510	9360	9360	1.00	534
90	68	11025	9923	0.90	487	10575	9518	0.90	516	10260	9234	0.90	528	9900	8910	0.90	551
90	72	11475	8951	0.78	505	11070	8635	0.78	537	10800	8424	0.78	551	10350	8073	0.78	574
90	75	12060	7960	0.66	528	11610	7663	0.66	557	11340	7484	0.66	574	10980	7247	0.66	603
90	79	12420	6707	0.54	557	12060	6512	0.54	586	11880	6415	0.54	603	11520	6221	0.54	621

NOTE CA: Capacity (Btu/h) SHF: Sensible heat factor DB: Dry-bulb temperature
SHC: Sensible heat capacity (Btu/h) P.C. : Power consumption (W) WB: Wet-bulb temperature

MUZ-FE09NAH

CAPACITY (Btu/h): 9000 INPUT: 580 W SHF: 0.76

Indoor intake air DB(ºF)	Indoor intake air WB(ºF)	Outdoor intake air DB(ºF)											
		95				104				115			
		CA	SHC	SHF	P.C.	CA	SHC	SHF	P.C.	CA	SHC	SHF	P.C.
70	64	8820	5116	0.58	568	8100	4698	0.58	603	7470	4333	0.58	626
70	68	9270	4264	0.46	592	8640	3974	0.46	621	8010	3685	0.46	655
72	64	8820	5468	0.62	568	8100	5022	0.62	603	7470	4631	0.62	626
72	68	9270	4635	0.50	592	8640	4320	0.50	621	8010	4005	0.50	655
72	72	9810	3728	0.38	615	9180	3488	0.38	650	8550	3249	0.38	673
73	64	8820	5821	0.66	568	8100	5346	0.66	603	7470	4930	0.66	626
73	68	9270	5006	0.54	592	8640	4666	0.54	621	8010	4325	0.54	655
73	72	9810	4120	0.42	615	9180	3856	0.42	650	8550	3591	0.42	673
75	64	8820	6174	0.70	568	8100	5670	0.70	603	7470	5229	0.70	626
75	68	9270	5377	0.58	592	8640	5011	0.58	621	8010	4646	0.58	655
75	72	9810	4513	0.46	615	9180	4223	0.46	650	8550	3933	0.46	673
75	75	10350	3519	0.34	638	9720	3305	0.34	667	9180	3121	0.34	696
77	64	8820	6527	0.74	568	8100	5994	0.74	603	7470	5528	0.74	626
77	68	9270	5747	0.62	592	8640	5357	0.62	621	8010	4966	0.62	655
77	72	9810	4905	0.50	615	9180	4590	0.50	650	8550	4275	0.50	673
77	75	10350	3933	0.38	638	9720	3694	0.38	667	9180	3488	0.38	696
79	64	8820	6880	0.78	568	8100	6318	0.78	603	7470	5827	0.78	626
79	68	9270	6118	0.66	592	8640	5702	0.66	621	8010	5287	0.66	655
79	72	9810	5297	0.54	615	9180	4957	0.54	650	8550	4617	0.54	673
79	75	10350	4347	0.42	638	9720	4082	0.42	667	9180	3856	0.42	696
79	79	10890	3267	0.30	661	10260	3078	0.30	690	9630	2889	0.30	719
81	64	8820	7232	0.82	568	8100	6642	0.82	603	7470	6125	0.82	626
81	68	9270	6489	0.70	592	8640	6048	0.70	621	8010	5607	0.70	655
81	72	9810	5690	0.58	615	9180	5324	0.58	650	8550	4959	0.58	673
81	75	10350	4761	0.46	638	9720	4471	0.46	667	9180	4223	0.46	696
81	79	10890	3703	0.34	661	10260	3488	0.34	690	9630	3274	0.34	719
82	64	8820	7585	0.86	568	8100	6966	0.86	603	7470	6424	0.86	626
82	68	9270	6860	0.74	592	8640	6394	0.74	621	8010	5927	0.74	655
82	72	9810	6082	0.62	615	9180	5692	0.62	650	8550	5301	0.62	673
82	75	10350	5175	0.50	638	9720	4860	0.50	667	9180	4590	0.50	696
82	79	10890	4138	0.38	661	10260	3899	0.38	690	9630	3659	0.38	719
84	64	8820	7938	0.90	568	8100	7290	0.90	603	7470	6723	0.90	626
84	68	9270	7231	0.78	592	8640	6739	0.78	621	8010	6248	0.78	655
84	72	9810	6475	0.66	615	9180	6059	0.66	650	8550	5643	0.66	673
84	75	10350	5589	0.54	638	9720	5249	0.54	667	9180	4957	0.54	696
84	79	10890	4574	0.42	661	10260	4309	0.42	690	9630	4045	0.42	719
86	64	8820	8291	0.94	568	8100	7614	0.94	603	7470	7022	0.94	626
86	68	9270	7601	0.82	592	8640	7085	0.82	621	8010	6568	0.82	655
86	72	9810	6867	0.70	615	9180	6426	0.70	650	8550	5985	0.70	673
86	75	10350	6003	0.58	638	9720	5638	0.58	667	9180	5324	0.58	696
86	79	10890	5009	0.46	661	10260	4720	0.46	690	9630	4430	0.46	719
88	64	8820	8644	0.98	568	8100	7938	0.98	603	7470	7321	0.98	626
88	68	9270	7972	0.86	592	8640	7430	0.86	621	8010	6889	0.86	655
88	72	9810	7259	0.74	615	9180	6793	0.74	650	8550	6327	0.74	673
88	75	10350	6417	0.62	638	9720	6026	0.62	667	9180	5692	0.62	696
88	79	10890	5445	0.50	661	10260	5130	0.50	690	9630	4815	0.50	719
90	64	8820	8820	1.00	568	8100	8100	1.00	603	7470	7470	1.00	626
90	68	9270	8343	0.90	592	8640	7776	0.90	621	8010	7209	0.90	655
90	72	9810	7652	0.78	615	9180	7160	0.78	650	8550	6669	0.78	673
90	75	10350	6831	0.66	638	9720	6415	0.66	667	9180	6059	0.66	696
90	79	10890	5881	0.54	661	10260	5540	0.54	690	9630	5200	0.54	719

NOTE CA: Capacity (Btu/h) SHF: Sensible heat factor DB: Dry-bulb temperature
SHC: Sensible heat capacity (Btu/h) P.C. : Power consumption (W) WB: Wet-bulb temperature

MUZ-FE12NAH

CAPACITY (Btu/h): 12000 INPUT: 930 W SHF: 0.73

Indoor intake air DB(ºF)	Indoor intake air WB(ºF)	Outdoor intake air DB(ºF)															
		70				77				81				86			
		CA	SHC	SHF	P.C.	CA	SHC	SHF	P.C.	CA	SHC	SHF	P.C.	CA	SHC	SHF	P.C.
70	64	14100	7755	0.55	744	13500	7425	0.55	781	12960	7128	0.55	818	12480	6864	0.55	856
70	68	14700	6321	0.43	781	14100	6063	0.43	828	13680	5882	0.43	846	13200	5676	0.43	884
72	64	14100	8319	0.59	744	13500	7965	0.59	781	12960	7646	0.59	818	12480	7363	0.59	856
72	68	14700	6909	0.47	781	14100	6627	0.47	828	13680	6430	0.47	846	13200	6204	0.47	884
72	72	15300	5355	0.35	809	14760	5166	0.35	860	14400	5040	0.35	884	13800	4830	0.35	921
73	64	14100	8883	0.63	744	13500	8505	0.63	781	12960	8165	0.63	818	12480	7862	0.63	856
73	68	14700	7497	0.51	781	14100	7191	0.51	828	13680	6977	0.51	846	13200	6732	0.51	884
73	72	15300	5967	0.39	809	14760	5756	0.39	860	14400	5616	0.39	884	13800	5382	0.39	921
75	64	14100	9447	0.67	744	13500	9045	0.67	781	12960	8683	0.67	818	12480	8362	0.67	856
75	68	14700	8085	0.55	781	14100	7755	0.55	828	13680	7524	0.55	846	13200	7260	0.55	884
75	72	15300	6579	0.43	809	14760	6347	0.43	860	14400	6192	0.43	884	13800	5934	0.43	921
75	75	16080	4985	0.31	846	15480	4799	0.31	893	15120	4687	0.31	921	14640	4538	0.31	967
77	64	14100	10011	0.71	744	13500	9585	0.71	781	12960	9202	0.71	818	12480	8861	0.71	856
77	68	14700	8673	0.59	781	14100	8319	0.59	828	13680	8071	0.59	846	13200	7788	0.59	884
77	72	15300	7191	0.47	809	14760	6937	0.47	860	14400	6768	0.47	884	13800	6486	0.47	921
77	75	16080	5628	0.35	846	15480	5418	0.35	893	15120	5292	0.35	921	14640	5124	0.35	967
79	64	14100	10575	0.75	744	13500	10125	0.75	781	12960	9720	0.75	818	12480	9360	0.75	856
79	68	14700	9261	0.63	781	14100	8883	0.63	828	13680	8618	0.63	846	13200	8316	0.63	884
79	72	15300	7803	0.51	809	14760	7528	0.51	860	14400	7344	0.51	884	13800	7038	0.51	921
79	75	16080	6271	0.39	846	15480	6037	0.39	893	15120	5897	0.39	921	14640	5710	0.39	967
79	79	16560	4471	0.27	893	16080	4342	0.27	939	15840	4277	0.27	967	15360	4147	0.27	995
81	64	14100	11139	0.79	744	13500	10665	0.79	781	12960	10238	0.79	818	12480	9859	0.79	856
81	68	14700	9849	0.67	781	14100	9447	0.67	828	13680	9166	0.67	846	13200	8844	0.67	884
81	72	15300	8415	0.55	809	14760	8118	0.55	860	14400	7920	0.55	884	13800	7590	0.55	921
81	75	16080	6914	0.43	846	15480	6656	0.43	893	15120	6502	0.43	921	14640	6295	0.43	967
81	79	16560	5134	0.31	893	16080	4985	0.31	939	15840	4910	0.31	967	15360	4762	0.31	995
82	64	14100	11703	0.83	744	13500	11205	0.83	781	12960	10757	0.83	818	12480	10358	0.83	856
82	68	14700	10437	0.71	781	14100	10011	0.71	828	13680	9713	0.71	846	13200	9372	0.71	884
82	72	15300	9027	0.59	809	14760	8708	0.59	860	14400	8496	0.59	884	13800	8142	0.59	921
82	75	16080	7558	0.47	846	15480	7276	0.47	893	15120	7106	0.47	921	14640	6881	0.47	967
82	79	16560	5796	0.35	893	16080	5628	0.35	939	15840	5544	0.35	967	15360	5376	0.35	995
84	64	14100	12267	0.87	744	13500	11745	0.87	781	12960	11275	0.87	818	12480	10858	0.87	856
84	68	14700	11025	0.75	781	14100	10575	0.75	828	13680	10260	0.75	846	13200	9900	0.75	884
84	72	15300	9639	0.63	809	14760	9299	0.63	860	14400	9072	0.63	884	13800	8694	0.63	921
84	75	16080	8201	0.51	846	15480	7895	0.51	893	15120	7711	0.51	921	14640	7466	0.51	967
84	79	16560	6458	0.39	893	16080	6271	0.39	939	15840	6178	0.39	967	15360	5990	0.39	995
86	64	14100	12831	0.91	744	13500	12285	0.91	781	12960	11794	0.91	818	12480	11357	0.91	856
86	68	14700	11613	0.79	781	14100	11139	0.79	828	13680	10807	0.79	846	13200	10428	0.79	884
86	72	15300	10251	0.67	809	14760	9889	0.67	860	14400	9648	0.67	884	13800	9246	0.67	921
86	75	16080	8844	0.55	846	15480	8514	0.55	893	15120	8316	0.55	921	14640	8052	0.55	967
86	79	16560	7121	0.43	893	16080	6914	0.43	939	15840	6811	0.43	967	15360	6605	0.43	995
88	64	14100	13395	0.95	744	13500	12825	0.95	781	12960	12312	0.95	818	12480	11856	0.95	856
88	68	14700	12201	0.83	781	14100	11703	0.83	828	13680	11354	0.83	846	13200	10956	0.83	884
88	72	15300	10863	0.71	809	14760	10480	0.71	860	14400	10224	0.71	884	13800	9798	0.71	921
88	75	16080	9487	0.59	846	15480	9133	0.59	893	15120	8921	0.59	921	14640	8638	0.59	967
88	79	16560	7783	0.47	893	16080	7558	0.47	939	15840	7445	0.47	967	15360	7219	0.47	995
90	64	14100	13959	0.99	744	13500	13365	0.99	781	12960	12830	0.99	818	12480	12355	0.99	856
90	68	14700	12789	0.87	781	14100	12267	0.87	828	13680	11902	0.87	846	13200	11484	0.87	884
90	72	15300	11475	0.75	809	14760	11070	0.75	860	14400	10800	0.75	884	13800	10350	0.75	921
90	75	16080	10130	0.63	846	15480	9752	0.63	893	15120	9526	0.63	921	14640	9223	0.63	967
90	79	16560	8446	0.51	893	16080	8201	0.51	939	15840	8078	0.51	967	15360	7834	0.51	995

NOTE CA: Capacity (Btu/h) SHF: Sensible heat factor DB: Dry-bulb temperature
SHC: Sensible heat capacity (Btu/h) P.C. : Power consumption (W) WB: Wet-bulb temperature

MUZ-FE12NAH

CAPACITY (Btu/h): 12000 INPUT: 930 W SHF: 0.73

Indoor intake air DB(ºF)	Indoor intake air WB(ºF)	Outdoor intake air DB(ºF)											
		95				104				115			
		CA	SHC	SHF	P.C.	CA	SHC	SHF	P.C.	CA	SHC	SHF	P.C.
70	64	11760	6468	0.55	911	10800	5940	0.55	967	9960	5478	0.55	1004
70	68	12360	5315	0.43	949	11520	4954	0.43	995	10680	4592	0.43	1051
72	64	11760	6938	0.59	911	10800	6372	0.59	967	9960	5876	0.59	1004
72	68	12360	5809	0.47	949	11520	5414	0.47	995	10680	5020	0.47	1051
72	72	13080	4578	0.35	986	12240	4284	0.35	1042	11400	3990	0.35	1079
73	64	11760	7409	0.63	911	10800	6804	0.63	967	9960	6275	0.63	1004
73	68	12360	6304	0.51	949	11520	5875	0.51	995	10680	5447	0.51	1051
73	72	13080	5101	0.39	986	12240	4774	0.39	1042	11400	4446	0.39	1079
75	64	11760	7879	0.67	911	10800	7236	0.67	967	9960	6673	0.67	1004
75	68	12360	6798	0.55	949	11520	6336	0.55	995	10680	5874	0.55	1051
75	72	13080	5624	0.43	986	12240	5263	0.43	1042	11400	4902	0.43	1079
75	75	13800	4278	0.31	1023	12960	4018	0.31	1070	12240	3794	0.31	1116
77	64	11760	8350	0.71	911	10800	7668	0.71	967	9960	7072	0.71	1004
77	68	12360	7292	0.59	949	11520	6797	0.59	995	10680	6301	0.59	1051
77	72	13080	6148	0.47	986	12240	5753	0.47	1042	11400	5358	0.47	1079
77	75	13800	4830	0.35	1023	12960	4536	0.35	1070	12240	4284	0.35	1116
79	64	11760	8820	0.75	911	10800	8100	0.75	967	9960	7470	0.75	1004
79	68	12360	7787	0.63	949	11520	7258	0.63	995	10680	6728	0.63	1051
79	72	13080	6671	0.51	986	12240	6242	0.51	1042	11400	5814	0.51	1079
79	75	13800	5382	0.39	1023	12960	5054	0.39	1070	12240	4774	0.39	1116
79	79	14520	3920	0.27	1060	13680	3694	0.27	1107	12840	3467	0.27	1153
81	64	11760	9290	0.79	911	10800	8532	0.79	967	9960	7868	0.79	1004
81	68	12360	8281	0.67	949	11520	7718	0.67	995	10680	7156	0.67	1051
81	72	13080	7194	0.55	986	12240	6732	0.55	1042	11400	6270	0.55	1079
81	75	13800	5934	0.43	1023	12960	5573	0.43	1070	12240	5263	0.43	1116
81	79	14520	4501	0.31	1060	13680	4241	0.31	1107	12840	3980	0.31	1153
82	64	11760	9761	0.83	911	10800	8964	0.83	967	9960	8267	0.83	1004
82	68	12360	8776	0.71	949	11520	8179	0.71	995	10680	7583	0.71	1051
82	72	13080	7717	0.59	986	12240	7222	0.59	1042	11400	6726	0.59	1079
82	75	13800	6486	0.47	1023	12960	6091	0.47	1070	12240	5753	0.47	1116
82	79	14520	5082	0.35	1060	13680	4788	0.35	1107	12840	4494	0.35	1153
84	64	11760	10231	0.87	911	10800	9396	0.87	967	9960	8665	0.87	1004
84	68	12360	9270	0.75	949	11520	8640	0.75	995	10680	8010	0.75	1051
84	72	13080	8240	0.63	986	12240	7711	0.63	1042	11400	7182	0.63	1079
84	75	13800	7038	0.51	1023	12960	6610	0.51	1070	12240	6242	0.51	1116
84	79	14520	5663	0.39	1060	13680	5335	0.39	1107	12840	5008	0.39	1153
86	64	11760	10702	0.91	911	10800	9828	0.91	967	9960	9064	0.91	1004
86	68	12360	9764	0.79	949	11520	9101	0.79	995	10680	8437	0.79	1051
86	72	13080	8764	0.67	986	12240	8201	0.67	1042	11400	7638	0.67	1079
86	75	13800	7590	0.55	1023	12960	7128	0.55	1070	12240	6732	0.55	1116
86	79	14520	6244	0.43	1060	13680	5882	0.43	1107	12840	5521	0.43	1153
88	64	11760	11172	0.95	911	10800	10260	0.95	967	9960	9462	0.95	1004
88	68	12360	10259	0.83	949	11520	9562	0.83	995	10680	8864	0.83	1051
88	72	13080	9287	0.71	986	12240	8690	0.71	1042	11400	8094	0.71	1079
88	75	13800	8142	0.59	1023	12960	7646	0.59	1070	12240	7222	0.59	1116
88	79	14520	6824	0.47	1060	13680	6430	0.47	1107	12840	6035	0.47	1153
90	64	11760	11642	0.99	911	10800	10692	0.99	967	9960	9860	0.99	1004
90	68	12360	10753	0.87	949	11520	10022	0.87	995	10680	9292	0.87	1051
90	72	13080	9810	0.75	986	12240	9180	0.75	1042	11400	8550	0.75	1079
90	75	13800	8694	0.63	1023	12960	8165	0.63	1070	12240	7711	0.63	1116
90	79	14520	7405	0.51	1060	13680	6977	0.51	1107	12840	6548	0.51	1153

NOTE CA: Capacity (Btu/h) SHF: Sensible heat factor DB: Dry-bulb temperature
SHC: Sensible heat capacity (Btu/h) P.C. : Power consumption (W) WB: Wet-bulb temperature

MUFZ-KJ09NAHZ

CAPACITY (Btu/h): 9000 INPUT (W): 570 SHF: 0.79

INDOOR DB (°F)	INDOOR WB (°F)	OUTDOOR DB (°F)															
		70				77				81				86			
		CA	SHC	SHF	P.C.	CA	SHC	SHF	P.C.	CA	SHC	SHF	P.C.	CA	SHC	SHF	P.C.
70	64	10575	6451	0.61	456	10125	6176	0.61	479	9720	5929	0.61	502	9360	5710	0.61	524
70	68	11025	5402	0.49	479	10575	5182	0.49	507	10260	5027	0.49	519	9900	4851	0.49	542
72	64	10575	6874	0.65	456	10125	6581	0.65	479	9720	6318	0.65	502	9360	6084	0.65	524
72	68	11025	5843	0.53	479	10575	5605	0.53	507	10260	5438	0.53	519	9900	5247	0.53	542
72	72	11475	4705	0.41	496	11070	4539	0.41	527	10800	4428	0.41	542	10350	4244	0.41	564
73	64	10575	7297	0.69	456	10125	6986	0.69	479	9720	6707	0.69	502	9360	6458	0.69	524
73	68	11025	6284	0.57	479	10575	6028	0.57	507	10260	5848	0.57	519	9900	5643	0.57	542
73	72	11475	5164	0.45	496	11070	4982	0.45	527	10800	4860	0.45	542	10350	4658	0.45	564
75	64	10575	7720	0.73	456	10125	7391	0.73	479	9720	7096	0.73	502	9360	6833	0.73	524
75	68	11025	6725	0.61	479	10575	6451	0.61	507	10260	6259	0.61	519	9900	6039	0.61	542
75	72	11475	5623	0.49	496	11070	5424	0.49	527	10800	5292	0.49	542	10350	5072	0.49	564
75	75	12060	4462	0.37	519	11610	4296	0.37	547	11340	4196	0.37	564	10980	4063	0.37	593
77	64	10575	8143	0.77	456	10125	7796	0.77	479	9720	7484	0.77	502	9360	7207	0.77	524
77	68	11025	7166	0.65	479	10575	6874	0.65	507	10260	6669	0.65	519	9900	6435	0.65	542
77	72	11475	6082	0.53	496	11070	5867	0.53	527	10800	5724	0.53	542	10350	5486	0.53	564
77	75	12060	4945	0.41	519	11610	4760	0.41	547	11340	4649	0.41	564	10980	4502	0.41	593
79	64	10575	8566	0.81	456	10125	8201	0.81	479	9720	7873	0.81	502	9360	7582	0.81	524
79	68	11025	7607	0.69	479	10575	7297	0.69	507	10260	7079	0.69	519	9900	6831	0.69	542
79	72	11475	6541	0.57	496	11070	6310	0.57	527	10800	6156	0.57	542	10350	5900	0.57	564
79	75	12060	5427	0.45	519	11610	5225	0.45	547	11340	5103	0.45	564	10980	4941	0.45	593
79	79	12420	4099	0.33	547	12060	3980	0.33	576	11880	3920	0.33	593	11520	3802	0.33	610
81	64	10575	8989	0.85	456	10125	8606	0.85	479	9720	8262	0.85	502	9360	7956	0.85	524
81	68	11025	8048	0.73	479	10575	7720	0.73	507	10260	7490	0.73	519	9900	7227	0.73	542
81	72	11475	7000	0.61	496	11070	6753	0.61	527	10800	6588	0.61	542	10350	6314	0.61	564
81	75	12060	5909	0.49	519	11610	5689	0.49	547	11340	5557	0.49	564	10980	5380	0.49	593
81	79	12420	4595	0.37	547	12060	4462	0.37	576	11880	4396	0.37	593	11520	4262	0.37	610
82	64	10575	9412	0.89	456	10125	9011	0.89	479	9720	8651	0.89	502	9360	8330	0.89	524
82	68	11025	8489	0.77	479	10575	8143	0.77	507	10260	7900	0.77	519	9900	7623	0.77	542
82	72	11475	7459	0.65	496	11070	7196	0.65	527	10800	7020	0.65	542	10350	6728	0.65	564
82	75	12060	6392	0.53	519	11610	6153	0.53	547	11340	6010	0.53	564	10980	5819	0.53	593
82	79	12420	5092	0.41	547	12060	4945	0.41	576	11880	4871	0.41	593	11520	4723	0.41	610
84	64	10575	9835	0.93	456	10125	9416	0.93	479	9720	9040	0.93	502	9360	8705	0.93	524
84	68	11025	8930	0.81	479	10575	8566	0.81	507	10260	8311	0.81	519	9900	8019	0.81	542
84	72	11475	7918	0.69	496	11070	7638	0.69	527	10800	7452	0.69	542	10350	7142	0.69	564
84	75	12060	6874	0.57	519	11610	6618	0.57	547	11340	6464	0.57	564	10980	6259	0.57	593
84	79	12420	5589	0.45	547	12060	5427	0.45	576	11880	5346	0.45	593	11520	5184	0.45	610
86	64	10575	10258	0.97	456	10125	9821	0.97	479	9720	9428	0.97	502	9360	9079	0.97	524
86	68	11025	9371	0.85	479	10575	8989	0.85	507	10260	8721	0.85	519	9900	8415	0.85	542
86	72	11475	8377	0.73	496	11070	8081	0.73	527	10800	7884	0.73	542	10350	7556	0.73	564
86	75	12060	7357	0.61	519	11610	7082	0.61	547	11340	6917	0.61	564	10980	6698	0.61	593
86	79	12420	6086	0.49	547	12060	5909	0.49	576	11880	5821	0.49	593	11520	5645	0.49	610
88	64	10575	10575	1.00	456	10125	10125	1.00	479	9720	9720	1.00	502	9360	9360	1.00	524
88	68	11025	9812	0.89	479	10575	9412	0.89	507	10260	9131	0.89	519	9900	8811	0.89	542
88	72	11475	8836	0.77	496	11070	8524	0.77	527	10800	8316	0.77	542	10350	7970	0.77	564
88	75	12060	7839	0.65	519	11610	7547	0.65	547	11340	7371	0.65	564	10980	7137	0.65	593
88	79	12420	6583	0.53	547	12060	6392	0.53	576	11880	6296	0.53	593	11520	6106	0.53	610
90	64	10575	10575	1.00	456	10125	10125	1.00	479	9720	9720	1.00	502	9360	9360	1.00	524
90	68	11025	10253	0.93	479	10575	9835	0.93	507	10260	9542	0.93	519	9900	9207	0.93	542
90	72	11475	9295	0.81	496	11070	8967	0.81	527	10800	8748	0.81	542	10350	8384	0.81	564
90	75	12060	8321	0.69	519	11610	8011	0.69	547	11340	7825	0.69	564	10980	7576	0.69	593
90	79	12420	7079	0.57	547	12060	6874	0.57	576	11880	6772	0.57	593	11520	6566	0.57	610

NOTE CA: Capacity (Btu/h) SHF: Sensible heat factor DB: Dry-bulb temperature
SHC: Sensible heat capacity (Btu/h) P.C. : Power consumption (W) WB: Wet-bulb temperature

MUFZ-KJ09NAHZ

CAPACITY (Btu/h): 9000 INPUT (W): 570 SHF: 0.79

INDOOR DB (°F)	INDOOR WB (°F)	OUTDOOR DB (°F)											
		95				104				115			
		CA	SHC	SHF	P.C.	CA	SHC	SHF	P.C.	CA	SHC	SHF	P.C.
70	64	8820	5380	0.61	559	8100	4941	0.61	593	7470	4557	0.61	616
70	68	9270	4542	0.49	581	8640	4234	0.49	610	8010	3925	0.49	644
72	64	8820	5733	0.65	559	8100	5265	0.65	593	7470	4856	0.65	616
72	68	9270	4913	0.53	581	8640	4579	0.53	610	8010	4245	0.53	644
72	72	9810	4022	0.41	604	9180	3764	0.41	638	8550	3506	0.41	661
73	64	8820	6086	0.69	559	8100	5589	0.69	593	7470	5154	0.69	616
73	68	9270	5284	0.57	581	8640	4925	0.57	610	8010	4566	0.57	644
73	72	9810	4415	0.45	604	9180	4131	0.45	638	8550	3848	0.45	661
75	64	8820	6439	0.73	559	8100	5913	0.73	593	7470	5453	0.73	616
75	68	9270	5655	0.61	581	8640	5270	0.61	610	8010	4886	0.61	644
75	72	9810	4807	0.49	604	9180	4498	0.49	638	8550	4190	0.49	661
75	75	10350	3830	0.37	627	9720	3596	0.37	656	9180	3397	0.37	684
77	64	8820	6791	0.77	559	8100	6237	0.77	593	7470	5752	0.77	616
77	68	9270	6026	0.65	581	8640	5616	0.65	610	8010	5207	0.65	644
77	72	9810	5199	0.53	604	9180	4865	0.53	638	8550	4532	0.53	661
77	75	10350	4244	0.41	627	9720	3985	0.41	656	9180	3764	0.41	684
79	64	8820	7144	0.81	559	8100	6561	0.81	593	7470	6051	0.81	616
79	68	9270	6396	0.69	581	8640	5962	0.69	610	8010	5527	0.69	644
79	72	9810	5592	0.57	604	9180	5233	0.57	638	8550	4874	0.57	661
79	75	10350	4658	0.45	627	9720	4374	0.45	656	9180	4131	0.45	684
79	79	10890	3594	0.33	650	10260	3386	0.33	678	9630	3178	0.33	707
81	64	8820	7497	0.85	559	8100	6885	0.85	593	7470	6350	0.85	616
81	68	9270	6767	0.73	581	8640	6307	0.73	610	8010	5847	0.73	644
81	72	9810	5984	0.61	604	9180	5600	0.61	638	8550	5216	0.61	661
81	75	10350	5072	0.49	627	9720	4763	0.49	656	9180	4498	0.49	684
81	79	10890	4029	0.37	650	10260	3796	0.37	678	9630	3563	0.37	707
82	64	8820	7850	0.89	559	8100	7209	0.89	593	7470	6648	0.89	616
82	68	9270	7138	0.77	581	8640	6653	0.77	610	8010	6168	0.77	644
82	72	9810	6377	0.65	604	9180	5967	0.65	638	8550	5558	0.65	661
82	75	10350	5486	0.53	627	9720	5152	0.53	656	9180	4865	0.53	684
82	79	10890	4465	0.41	650	10260	4207	0.41	678	9630	3948	0.41	707
84	64	8820	8203	0.93	559	8100	7533	0.93	593	7470	6947	0.93	616
84	68	9270	7509	0.81	581	8640	6998	0.81	610	8010	6488	0.81	644
84	72	9810	6769	0.69	604	9180	6334	0.69	638	8550	5900	0.69	661
84	75	10350	5900	0.57	627	9720	5540	0.57	656	9180	5233	0.57	684
84	79	10890	4901	0.45	650	10260	4617	0.45	678	9630	4334	0.45	707
86	64	8820	8555	0.97	559	8100	7857	0.97	593	7470	7246	0.97	616
86	68	9270	7880	0.85	581	8640	7344	0.85	610	8010	6809	0.85	644
86	72	9810	7161	0.73	604	9180	6701	0.73	638	8550	6242	0.73	661
86	75	10350	6314	0.61	627	9720	5929	0.61	656	9180	5600	0.61	684
86	79	10890	5336	0.49	650	10260	5027	0.49	678	9630	4719	0.49	707
88	64	8820	8820	1.00	559	8100	8100	1.00	593	7470	7470	1.00	616
88	68	9270	8250	0.89	581	8640	7690	0.89	610	8010	7129	0.89	644
88	72	9810	7554	0.77	604	9180	7069	0.77	638	8550	6584	0.77	661
88	75	10350	6728	0.65	627	9720	6318	0.65	656	9180	5967	0.65	684
88	79	10890	5772	0.53	650	10260	5438	0.53	678	9630	5104	0.53	707
90	64	8820	8820	1.00	559	8100	8100	1.00	593	7470	7470	1.00	616
90	68	9270	8621	0.93	581	8640	8035	0.93	610	8010	7449	0.93	644
90	72	9810	7946	0.81	604	9180	7436	0.81	638	8550	6926	0.81	661
90	75	10350	7142	0.69	627	9720	6707	0.69	656	9180	6334	0.69	684
90	79	10890	6207	0.57	650	10260	5848	0.57	678	9630	5489	0.57	707

NOTE CA: Capacity (Btu/h) SHF: Sensible heat factor DB: Dry-bulb temperature
SHC: Sensible heat capacity (Btu/h) P.C. : Power consumption (W) WB: Wet-bulb temperature

MUFZ-KJ12NAHZ

CAPACITY (Btu/h): 12000 INPUT (W): 890 SHF: 0.70

INDOOR DB (°F)	INDOOR WB (°F)	OUTDOOR DB (°F)															
		70				77				81				86			
		CA	SHC	SHF	P.C.	CA	SHC	SHF	P.C.	CA	SHC	SHF	P.C.	CA	SHC	SHF	P.C.
70	64	14100	7332	0.52	712	13500	7020	0.52	748	12960	6739	0.52	783	12480	6490	0.52	819
70	68	14700	5880	0.40	748	14100	5640	0.40	792	13680	5472	0.40	810	13200	5280	0.40	846
72	64	14100	7896	0.56	712	13500	7560	0.56	748	12960	7258	0.56	783	12480	6989	0.56	819
72	68	14700	6468	0.44	748	14100	6204	0.44	792	13680	6019	0.44	810	13200	5808	0.44	846
72	72	15300	4896	0.32	774	14760	4723	0.32	823	14400	4608	0.32	846	13800	4416	0.32	881
73	64	14100	8460	0.60	712	13500	8100	0.60	748	12960	7776	0.60	783	12480	7488	0.60	819
73	68	14700	7056	0.48	748	14100	6768	0.48	792	13680	6566	0.48	810	13200	6336	0.48	846
73	72	15300	5508	0.36	774	14760	5314	0.36	823	14400	5184	0.36	846	13800	4968	0.36	881
75	64	14100	9024	0.64	712	13500	8640	0.64	748	12960	8294	0.64	783	12480	7987	0.64	819
75	68	14700	7644	0.52	748	14100	7332	0.52	792	13680	7114	0.52	810	13200	6864	0.52	846
75	72	15300	6120	0.40	774	14760	5904	0.40	823	14400	5760	0.40	846	13800	5520	0.40	881
75	75	16080	4502	0.28	810	15480	4334	0.28	854	15120	4234	0.28	881	14640	4099	0.28	926
77	64	14100	9588	0.68	712	13500	9180	0.68	748	12960	8813	0.68	783	12480	8486	0.68	819
77	68	14700	8232	0.56	748	14100	7896	0.56	792	13680	7661	0.56	810	13200	7392	0.56	846
77	72	15300	6732	0.44	774	14760	6494	0.44	823	14400	6336	0.44	846	13800	6072	0.44	881
77	75	16080	5146	0.32	810	15480	4954	0.32	854	15120	4838	0.32	881	14640	4685	0.32	926
79	64	14100	10152	0.72	712	13500	9720	0.72	748	12960	9331	0.72	783	12480	8986	0.72	819
79	68	14700	8820	0.60	748	14100	8460	0.60	792	13680	8208	0.60	810	13200	7920	0.60	846
79	72	15300	7344	0.48	774	14760	7085	0.48	823	14400	6912	0.48	846	13800	6624	0.48	881
79	75	16080	5789	0.36	810	15480	5573	0.36	854	15120	5443	0.36	881	14640	5270	0.36	926
79	79	16560	3974	0.24	854	16080	3859	0.24	899	15840	3802	0.24	926	15360	3686	0.24	952
81	64	14100	10716	0.76	712	13500	10260	0.76	748	12960	9850	0.76	783	12480	9485	0.76	819
81	68	14700	9408	0.64	748	14100	9024	0.64	792	13680	8755	0.64	810	13200	8448	0.64	846
81	72	15300	7956	0.52	774	14760	7675	0.52	823	14400	7488	0.52	846	13800	7176	0.52	881
81	75	16080	6432	0.40	810	15480	6192	0.40	854	15120	6048	0.40	881	14640	5856	0.40	926
81	79	16560	4637	0.28	854	16080	4502	0.28	899	15840	4435	0.28	926	15360	4301	0.28	952
82	64	14100	11280	0.80	712	13500	10800	0.80	748	12960	10368	0.80	783	12480	9984	0.80	819
82	68	14700	9996	0.68	748	14100	9588	0.68	792	13680	9302	0.68	810	13200	8976	0.68	846
82	72	15300	8568	0.56	774	14760	8266	0.56	823	14400	8064	0.56	846	13800	7728	0.56	881
82	75	16080	7075	0.44	810	15480	6811	0.44	854	15120	6653	0.44	881	14640	6442	0.44	926
82	79	16560	5299	0.32	854	16080	5146	0.32	899	15840	5069	0.32	926	15360	4915	0.32	952
84	64	14100	11844	0.84	712	13500	11340	0.84	748	12960	10886	0.84	783	12480	10483	0.84	819
84	68	14700	10584	0.72	748	14100	10152	0.72	792	13680	9850	0.72	810	13200	9504	0.72	846
84	72	15300	9180	0.60	774	14760	8856	0.60	823	14400	8640	0.60	846	13800	8280	0.60	881
84	75	16080	7718	0.48	810	15480	7430	0.48	854	15120	7258	0.48	881	14640	7027	0.48	926
84	79	16560	5962	0.36	854	16080	5789	0.36	899	15840	5702	0.36	926	15360	5530	0.36	952
86	64	14100	12408	0.88	712	13500	11880	0.88	748	12960	11405	0.88	783	12480	10982	0.88	819
86	68	14700	11172	0.76	748	14100	10716	0.76	792	13680	10397	0.76	810	13200	10032	0.76	846
86	72	15300	9792	0.64	774	14760	9446	0.64	823	14400	9216	0.64	846	13800	8832	0.64	881
86	75	16080	8362	0.52	810	15480	8050	0.52	854	15120	7862	0.52	881	14640	7613	0.52	926
86	79	16560	6624	0.40	854	16080	6432	0.40	899	15840	6336	0.40	926	15360	6144	0.40	952
88	64	14100	12972	0.92	712	13500	12420	0.92	748	12960	11923	0.92	783	12480	11482	0.92	819
88	68	14700	11760	0.80	748	14100	11280	0.80	792	13680	10944	0.80	810	13200	10560	0.80	846
88	72	15300	10404	0.68	774	14760	10037	0.68	823	14400	9792	0.68	846	13800	9384	0.68	881
88	75	16080	9005	0.56	810	15480	8669	0.56	854	15120	8467	0.56	881	14640	8198	0.56	926
88	79	16560	7286	0.44	854	16080	7075	0.44	899	15840	6970	0.44	926	15360	6758	0.44	952
90	64	14100	13536	0.96	712	13500	12960	0.96	748	12960	12442	0.96	783	12480	11981	0.96	819
90	68	14700	12348	0.84	748	14100	11844	0.84	792	13680	11491	0.84	810	13200	11088	0.84	846
90	72	15300	11016	0.72	774	14760	10627	0.72	823	14400	10368	0.72	846	13800	9936	0.72	881
90	75	16080	9648	0.60	810	15480	9288	0.60	854	15120	9072	0.60	881	14640	8784	0.60	926
90	79	16560	7949	0.48	854	16080	7718	0.48	899	15840	7603	0.48	926	15360	7373	0.48	952

NOTE CA: Capacity (Btu/h) SHF: Sensible heat factor DB: Dry-bulb temperature
SHC: Sensible heat capacity (Btu/h) P.C. : Power consumption (W) WB: Wet-bulb temperature

MUFZ-KJ12NAHZ

CAPACITY (Btu/h): 12000 INPUT (W): 890 SHF: 0.70

INDOOR DB (°F)	INDOOR WB (°F)	OUTDOOR DB (°F)											
		95				104				115			
		CA	SHC	SHF	P.C.	CA	SHC	SHF	P.C.	CA	SHC	SHF	P.C.
70	64	11760	6115	0.52	872	10800	5616	0.52	926	9960	5179	0.52	961
70	68	12360	4944	0.40	908	11520	4608	0.40	952	10680	4272	0.40	1006
72	64	11760	6586	0.56	872	10800	6048	0.56	926	9960	5578	0.56	961
72	68	12360	5438	0.44	908	11520	5069	0.44	952	10680	4699	0.44	1006
72	72	13080	4186	0.32	943	12240	3917	0.32	997	11400	3648	0.32	1032
73	64	11760	7056	0.60	872	10800	6480	0.60	926	9960	5976	0.60	961
73	68	12360	5933	0.48	908	11520	5530	0.48	952	10680	5126	0.48	1006
73	72	13080	4709	0.36	943	12240	4406	0.36	997	11400	4104	0.36	1032
75	64	11760	7526	0.64	872	10800	6912	0.64	926	9960	6374	0.64	961
75	68	12360	6427	0.52	908	11520	5990	0.52	952	10680	5554	0.52	1006
75	72	13080	5232	0.40	943	12240	4896	0.40	997	11400	4560	0.40	1032
75	75	13800	3864	0.28	979	12960	3629	0.28	1024	12240	3427	0.28	1068
77	64	11760	7997	0.68	872	10800	7344	0.68	926	9960	6773	0.68	961
77	68	12360	6922	0.56	908	11520	6451	0.56	952	10680	5981	0.56	1006
77	72	13080	5755	0.44	943	12240	5386	0.44	997	11400	5016	0.44	1032
77	75	13800	4416	0.32	979	12960	4147	0.32	1024	12240	3917	0.32	1068
79	64	11760	8467	0.72	872	10800	7776	0.72	926	9960	7171	0.72	961
79	68	12360	7416	0.60	908	11520	6912	0.60	952	10680	6408	0.60	1006
79	72	13080	6278	0.48	943	12240	5875	0.48	997	11400	5472	0.48	1032
79	75	13800	4968	0.36	979	12960	4666	0.36	1024	12240	4406	0.36	1068
79	79	14520	3485	0.24	1015	13680	3283	0.24	1059	12840	3082	0.24	1104
81	64	11760	8938	0.76	872	10800	8208	0.76	926	9960	7570	0.76	961
81	68	12360	7910	0.64	908	11520	7373	0.64	952	10680	6835	0.64	1006
81	72	13080	6802	0.52	943	12240	6365	0.52	997	11400	5928	0.52	1032
81	75	13800	5520	0.40	979	12960	5184	0.40	1024	12240	4896	0.40	1068
81	79	14520	4066	0.28	1015	13680	3830	0.28	1059	12840	3595	0.28	1104
82	64	11760	9408	0.80	872	10800	8640	0.80	926	9960	7968	0.80	961
82	68	12360	8405	0.68	908	11520	7834	0.68	952	10680	7262	0.68	1006
82	72	13080	7325	0.56	943	12240	6854	0.56	997	11400	6384	0.56	1032
82	75	13800	6072	0.44	979	12960	5702	0.44	1024	12240	5386	0.44	1068
82	79	14520	4646	0.32	1015	13680	4378	0.32	1059	12840	4109	0.32	1104
84	64	11760	9878	0.84	872	10800	9072	0.84	926	9960	8366	0.84	961
84	68	12360	8899	0.72	908	11520	8294	0.72	952	10680	7690	0.72	1006
84	72	13080	7848	0.60	943	12240	7344	0.60	997	11400	6840	0.60	1032
84	75	13800	6624	0.48	979	12960	6221	0.48	1024	12240	5875	0.48	1068
84	79	14520	5227	0.36	1015	13680	4925	0.36	1059	12840	4622	0.36	1104
86	64	11760	10349	0.88	872	10800	9504	0.88	926	9960	8765	0.88	961
86	68	12360	9394	0.76	908	11520	8755	0.76	952	10680	8117	0.76	1006
86	72	13080	8371	0.64	943	12240	7834	0.64	997	11400	7296	0.64	1032
86	75	13800	7176	0.52	979	12960	6739	0.52	1024	12240	6365	0.52	1068
86	79	14520	5808	0.40	1015	13680	5472	0.40	1059	12840	5136	0.40	1104
88	64	11760	10819	0.92	872	10800	9936	0.92	926	9960	9163	0.92	961
88	68	12360	9888	0.80	908	11520	9216	0.80	952	10680	8544	0.80	1006
88	72	13080	8894	0.68	943	12240	8323	0.68	997	11400	7752	0.68	1032
88	75	13800	7728	0.56	979	12960	7258	0.56	1024	12240	6854	0.56	1068
88	79	14520	6389	0.44	1015	13680	6019	0.44	1059	12840	5650	0.44	1104
90	64	11760	11290	0.96	872	10800	10368	0.96	926	9960	9562	0.96	961
90	68	12360	10382	0.84	908	11520	9677	0.84	952	10680	8971	0.84	1006
90	72	13080	9418	0.72	943	12240	8813	0.72	997	11400	8208	0.72	1032
90	75	13800	8280	0.60	979	12960	7776	0.60	1024	12240	7344	0.60	1068
90	79	14520	6970	0.48	1015	13680	6566	0.48	1059	12840	6163	0.48	1104

NOTE CA: Capacity (Btu/h) SHF: Sensible heat factor DB: Dry-bulb temperature
SHC: Sensible heat capacity (Btu/h) P.C. : Power consumption (W) WB: Wet-bulb temperature

MUFZ-KJ15NAHZ

CAPACITY (Btu/h): 15000 INPUT (W): 1120 SHF: 0.66

INDOOR DB (°F)	INDOOR WB (°F)	OUTDOOR DB (°F)															
		70				77				81				86			
		CA	SHC	SHF	P.C.	CA	SHC	SHF	P.C.	CA	SHC	SHF	P.C.	CA	SHC	SHF	P.C.
70	64	17625	8460	0.48	896	16875	8100	0.48	941	16200	7776	0.48	986	15600	7488	0.48	1030
70	68	18375	6615	0.36	941	17625	6345	0.36	997	17100	6156	0.36	1019	16500	5940	0.36	1064
72	64	17625	9165	0.52	896	16875	8775	0.52	941	16200	8424	0.52	986	15600	8112	0.52	1030
72	68	18375	7350	0.40	941	17625	7050	0.40	997	17100	6840	0.40	1019	16500	6600	0.40	1064
72	72	19125	5355	0.28	974	18450	5166	0.28	1036	18000	5040	0.28	1064	17250	4830	0.28	1109
73	64	17625	9870	0.56	896	16875	9450	0.56	941	16200	9072	0.56	986	15600	8736	0.56	1030
73	68	18375	8085	0.44	941	17625	7755	0.44	997	17100	7524	0.44	1019	16500	7260	0.44	1064
73	72	19125	6120	0.32	974	18450	5904	0.32	1036	18000	5760	0.32	1064	17250	5520	0.32	1109
75	64	17625	10575	0.60	896	16875	10125	0.60	941	16200	9720	0.60	986	15600	9360	0.60	1030
75	68	18375	8820	0.48	941	17625	8460	0.48	997	17100	8208	0.48	1019	16500	7920	0.48	1064
75	72	19125	6885	0.36	974	18450	6642	0.36	1036	18000	6480	0.36	1064	17250	6210	0.36	1109
75	75	20100	4824	0.24	1019	19350	4644	0.24	1075	18900	4536	0.24	1109	18300	4392	0.24	1165
77	64	17625	11280	0.64	896	16875	10800	0.64	941	16200	10368	0.64	986	15600	9984	0.64	1030
77	68	18375	9555	0.52	941	17625	9165	0.52	997	17100	8892	0.52	1019	16500	8580	0.52	1064
77	72	19125	7650	0.40	974	18450	7380	0.40	1036	18000	7200	0.40	1064	17250	6900	0.40	1109
77	75	20100	5628	0.28	1019	19350	5418	0.28	1075	18900	5292	0.28	1109	18300	5124	0.28	1165
79	64	17625	11985	0.68	896	16875	11475	0.68	941	16200	11016	0.68	986	15600	10608	0.68	1030
79	68	18375	10290	0.56	941	17625	9870	0.56	997	17100	9576	0.56	1019	16500	9240	0.56	1064
79	72	19125	8415	0.44	974	18450	8118	0.44	1036	18000	7920	0.44	1064	17250	7590	0.44	1109
79	75	20100	6432	0.32	1019	19350	6192	0.32	1075	18900	6048	0.32	1109	18300	5856	0.32	1165
79	79	20700	4140	0.20	1075	20100	4020	0.20	1131	19800	3960	0.20	1165	19200	3840	0.20	1198
81	64	17625	12690	0.72	896	16875	12150	0.72	941	16200	11664	0.72	986	15600	11232	0.72	1030
81	68	18375	11025	0.60	941	17625	10575	0.60	997	17100	10260	0.60	1019	16500	9900	0.60	1064
81	72	19125	9180	0.48	974	18450	8856	0.48	1036	18000	8640	0.48	1064	17250	8280	0.48	1109
81	75	20100	7236	0.36	1019	19350	6966	0.36	1075	18900	6804	0.36	1109	18300	6588	0.36	1165
81	79	20700	4968	0.24	1075	20100	4824	0.24	1131	19800	4752	0.24	1165	19200	4608	0.24	1198
82	64	17625	13395	0.76	896	16875	12825	0.76	941	16200	12312	0.76	986	15600	11856	0.76	1030
82	68	18375	11760	0.64	941	17625	11280	0.64	997	17100	10944	0.64	1019	16500	10560	0.64	1064
82	72	19125	9945	0.52	974	18450	9594	0.52	1036	18000	9360	0.52	1064	17250	8970	0.52	1109
82	75	20100	8040	0.40	1019	19350	7740	0.40	1075	18900	7560	0.40	1109	18300	7320	0.40	1165
82	79	20700	5796	0.28	1075	20100	5628	0.28	1131	19800	5544	0.28	1165	19200	5376	0.28	1198
84	64	17625	14100	0.80	896	16875	13500	0.80	941	16200	12960	0.80	986	15600	12480	0.80	1030
84	68	18375	12495	0.68	941	17625	11985	0.68	997	17100	11628	0.68	1019	16500	11220	0.68	1064
84	72	19125	10710	0.56	974	18450	10332	0.56	1036	18000	10080	0.56	1064	17250	9660	0.56	1109
84	75	20100	8844	0.44	1019	19350	8514	0.44	1075	18900	8316	0.44	1109	18300	8052	0.44	1165
84	79	20700	6624	0.32	1075	20100	6432	0.32	1131	19800	6336	0.32	1165	19200	6144	0.32	1198
86	64	17625	14805	0.84	896	16875	14175	0.84	941	16200	13608	0.84	986	15600	13104	0.84	1030
86	68	18375	13230	0.72	941	17625	12690	0.72	997	17100	12312	0.72	1019	16500	11880	0.72	1064
86	72	19125	11475	0.60	974	18450	11070	0.60	1036	18000	10800	0.60	1064	17250	10350	0.60	1109
86	75	20100	9648	0.48	1019	19350	9288	0.48	1075	18900	9072	0.48	1109	18300	8784	0.48	1165
86	79	20700	7452	0.36	1075	20100	7236	0.36	1131	19800	7128	0.36	1165	19200	6912	0.36	1198
88	64	17625	15510	0.88	896	16875	14850	0.88	941	16200	14256	0.88	986	15600	13728	0.88	1030
88	68	18375	13965	0.76	941	17625	13395	0.76	997	17100	12996	0.76	1019	16500	12540	0.76	1064
88	72	19125	12240	0.64	974	18450	11808	0.64	1036	18000	11520	0.64	1064	17250	11040	0.64	1109
88	75	20100	10452	0.52	1019	19350	10062	0.52	1075	18900	9828	0.52	1109	18300	9516	0.52	1165
88	79	20700	8280	0.40	1075	20100	8040	0.40	1131	19800	7920	0.40	1165	19200	7680	0.40	1198
90	64	17625	16215	0.92	896	16875	15525	0.92	941	16200	14904	0.92	986	15600	14352	0.92	1030
90	68	18375	14700	0.80	941	17625	14100	0.80	997	17100	13680	0.80	1019	16500	13200	0.80	1064
90	72	19125	13005	0.68	974	18450	12546	0.68	1036	18000	12240	0.68	1064	17250	11730	0.68	1109
90	75	20100	11256	0.56	1019	19350	10836	0.56	1075	18900	10584	0.56	1109	18300	10248	0.56	1165
90	79	20700	9108	0.44	1075	20100	8844	0.44	1131	19800	8712	0.44	1165	19200	8448	0.44	1198

NOTE CA: Capacity (Btu/h) SHF: Sensible heat factor DB: Dry-bulb temperature
SHC: Sensible heat capacity (Btu/h) P.C. : Power consumption (W) WB: Wet-bulb temperature

MUFZ-KJ15NAHZ

CAPACITY (Btu/h): 15000 INPUT (W): 1120 SHF: 0.66

INDOOR DB (°F)	INDOOR WB (°F)	OUTDOOR DB (°F)											
		95				104				115			
		CA	SHC	SHF	P.C.	CA	SHC	SHF	P.C.	CA	SHC	SHF	P.C.
70	64	14700	7056	0.48	1098	13500	6480	0.48	1165	12450	5976	0.48	1210
70	68	15450	5562	0.36	1142	14400	5184	0.36	1198	13350	4806	0.36	1266
72	64	14700	7644	0.52	1098	13500	7020	0.52	1165	12450	6474	0.52	1210
72	68	15450	6180	0.40	1142	14400	5760	0.40	1198	13350	5340	0.40	1266
72	72	16350	4578	0.28	1187	15300	4284	0.28	1254	14250	3990	0.28	1299
73	64	14700	8232	0.56	1098	13500	7560	0.56	1165	12450	6972	0.56	1210
73	68	15450	6798	0.44	1142	14400	6336	0.44	1198	13350	5874	0.44	1266
73	72	16350	5232	0.32	1187	15300	4896	0.32	1254	14250	4560	0.32	1299
75	64	14700	8820	0.60	1098	13500	8100	0.60	1165	12450	7470	0.60	1210
75	68	15450	7416	0.48	1142	14400	6912	0.48	1198	13350	6408	0.48	1266
75	72	16350	5886	0.36	1187	15300	5508	0.36	1254	14250	5130	0.36	1299
75	75	17250	4140	0.24	1232	16200	3888	0.24	1288	15300	3672	0.24	1344
77	64	14700	9408	0.64	1098	13500	8640	0.64	1165	12450	7968	0.64	1210
77	68	15450	8034	0.52	1142	14400	7488	0.52	1198	13350	6942	0.52	1266
77	72	16350	6540	0.40	1187	15300	6120	0.40	1254	14250	5700	0.40	1299
77	75	17250	4830	0.28	1232	16200	4536	0.28	1288	15300	4284	0.28	1344
79	64	14700	9996	0.68	1098	13500	9180	0.68	1165	12450	8466	0.68	1210
79	68	15450	8652	0.56	1142	14400	8064	0.56	1198	13350	7476	0.56	1266
79	72	16350	7194	0.44	1187	15300	6732	0.44	1254	14250	6270	0.44	1299
79	75	17250	5520	0.32	1232	16200	5184	0.32	1288	15300	4896	0.32	1344
79	79	18150	3630	0.20	1277	17100	3420	0.20	1333	16050	3210	0.20	1389
81	64	14700	10584	0.72	1098	13500	9720	0.72	1165	12450	8964	0.72	1210
81	68	15450	9270	0.60	1142	14400	8640	0.60	1198	13350	8010	0.60	1266
81	72	16350	7848	0.48	1187	15300	7344	0.48	1254	14250	6840	0.48	1299
81	75	17250	6210	0.36	1232	16200	5832	0.36	1288	15300	5508	0.36	1344
81	79	18150	4356	0.24	1277	17100	4104	0.24	1333	16050	3852	0.24	1389
82	64	14700	11172	0.76	1098	13500	10260	0.76	1165	12450	9462	0.76	1210
82	68	15450	9888	0.64	1142	14400	9216	0.64	1198	13350	8544	0.64	1266
82	72	16350	8502	0.52	1187	15300	7956	0.52	1254	14250	7410	0.52	1299
82	75	17250	6900	0.40	1232	16200	6480	0.40	1288	15300	6120	0.40	1344
82	79	18150	5082	0.28	1277	17100	4788	0.28	1333	16050	4494	0.28	1389
84	64	14700	11760	0.80	1098	13500	10800	0.80	1165	12450	9960	0.80	1210
84	68	15450	10506	0.68	1142	14400	9792	0.68	1198	13350	9078	0.68	1266
84	72	16350	9156	0.56	1187	15300	8568	0.56	1254	14250	7980	0.56	1299
84	75	17250	7590	0.44	1232	16200	7128	0.44	1288	15300	6732	0.44	1344
84	79	18150	5808	0.32	1277	17100	5472	0.32	1333	16050	5136	0.32	1389
86	64	14700	12348	0.84	1098	13500	11340	0.84	1165	12450	10458	0.84	1210
86	68	15450	11124	0.72	1142	14400	10368	0.72	1198	13350	9612	0.72	1266
86	72	16350	9810	0.60	1187	15300	9180	0.60	1254	14250	8550	0.60	1299
86	75	17250	8280	0.48	1232	16200	7776	0.48	1288	15300	7344	0.48	1344
86	79	18150	6534	0.36	1277	17100	6156	0.36	1333	16050	5778	0.36	1389
88	64	14700	12936	0.88	1098	13500	11880	0.88	1165	12450	10956	0.88	1210
88	68	15450	11742	0.76	1142	14400	10944	0.76	1198	13350	10146	0.76	1266
88	72	16350	10464	0.64	1187	15300	9792	0.64	1254	14250	9120	0.64	1299
88	75	17250	8970	0.52	1232	16200	8424	0.52	1288	15300	7956	0.52	1344
88	79	18150	7260	0.40	1277	17100	6840	0.40	1333	16050	6420	0.40	1389
90	64	14700	13524	0.92	1098	13500	12420	0.92	1165	12450	11454	0.92	1210
90	68	15450	12360	0.80	1142	14400	11520	0.80	1198	13350	10680	0.80	1266
90	72	16350	11118	0.68	1187	15300	10404	0.68	1254	14250	9690	0.68	1299
90	75	17250	9660	0.56	1232	16200	9072	0.56	1288	15300	8568	0.56	1344
90	79	18150	7986	0.44	1277	17100	7524	0.44	1333	16050	7062	0.44	1389

NOTE CA: Capacity (Btu/h) SHF: Sensible heat factor DB: Dry-bulb temperature
SHC: Sensible heat capacity (Btu/h) P.C. : Power consumption (W) WB: Wet-bulb temperature

MUFZ-KJ18NAHZ

CAPACITY (Btu/h): 17000 INPUT (W): 1350 SHF: 0.65

INDOOR DB (°F)	INDOOR WB (°F)	OUTDOOR DB (°F)															
		70				77				81				86			
		CA	SHC	SHF	P.C.	CA	SHC	SHF	P.C.	CA	SHC	SHF	P.C.	CA	SHC	SHF	P.C.
70	64	19975	9388	0.47	1080	19125	8989	0.47	1134	18360	8629	0.47	1188	17680	8310	0.47	1242
70	68	20825	7289	0.35	1134	19975	6991	0.35	1202	19380	6783	0.35	1229	18700	6545	0.35	1283
72	64	19975	10187	0.51	1080	19125	9754	0.51	1134	18360	9364	0.51	1188	17680	9017	0.51	1242
72	68	20825	8122	0.39	1134	19975	7790	0.39	1202	19380	7558	0.39	1229	18700	7293	0.39	1283
72	72	21675	5852	0.27	1175	20910	5646	0.27	1249	20400	5508	0.27	1283	19550	5279	0.27	1337
73	64	19975	10986	0.55	1080	19125	10519	0.55	1134	18360	10098	0.55	1188	17680	9724	0.55	1242
73	68	20825	8955	0.43	1134	19975	8589	0.43	1202	19380	8333	0.43	1229	18700	8041	0.43	1283
73	72	21675	6719	0.31	1175	20910	6482	0.31	1249	20400	6324	0.31	1283	19550	6061	0.31	1337
75	64	19975	11785	0.59	1080	19125	11284	0.59	1134	18360	10832	0.59	1188	17680	10431	0.59	1242
75	68	20825	9788	0.47	1134	19975	9388	0.47	1202	19380	9109	0.47	1229	18700	8789	0.47	1283
75	72	21675	7586	0.35	1175	20910	7319	0.35	1249	20400	7140	0.35	1283	19550	6843	0.35	1337
75	75	22780	5239	0.23	1229	21930	5044	0.23	1296	21420	4927	0.23	1337	20740	4770	0.23	1404
77	64	19975	12584	0.63	1080	19125	12049	0.63	1134	18360	11567	0.63	1188	17680	11138	0.63	1242
77	68	20825	10621	0.51	1134	19975	10187	0.51	1202	19380	9884	0.51	1229	18700	9537	0.51	1283
77	72	21675	8453	0.39	1175	20910	8155	0.39	1249	20400	7956	0.39	1283	19550	7625	0.39	1337
77	75	22780	6151	0.27	1229	21930	5921	0.27	1296	21420	5783	0.27	1337	20740	5600	0.27	1404
79	64	19975	13383	0.67	1080	19125	12814	0.67	1134	18360	12301	0.67	1188	17680	11846	0.67	1242
79	68	20825	11454	0.55	1134	19975	10986	0.55	1202	19380	10659	0.55	1229	18700	10285	0.55	1283
79	72	21675	9320	0.43	1175	20910	8991	0.43	1249	20400	8772	0.43	1283	19550	8407	0.43	1337
79	75	22780	7062	0.31	1229	21930	6798	0.31	1296	21420	6640	0.31	1337	20740	6429	0.31	1404
79	79	23460	4457	0.19	1296	22780	4328	0.19	1364	22440	4264	0.19	1404	21760	4134	0.19	1445
81	64	19975	14182	0.71	1080	19125	13579	0.71	1134	18360	13036	0.71	1188	17680	12553	0.71	1242
81	68	20825	12287	0.59	1134	19975	11785	0.59	1202	19380	11434	0.59	1229	18700	11033	0.59	1283
81	72	21675	10187	0.47	1175	20910	9828	0.47	1249	20400	9588	0.47	1283	19550	9189	0.47	1337
81	75	22780	7973	0.35	1229	21930	7676	0.35	1296	21420	7497	0.35	1337	20740	7259	0.35	1404
81	79	23460	5396	0.23	1296	22780	5239	0.23	1364	22440	5161	0.23	1404	21760	5005	0.23	1445
82	64	19975	14981	0.75	1080	19125	14344	0.75	1134	18360	13770	0.75	1188	17680	13260	0.75	1242
82	68	20825	13120	0.63	1134	19975	12584	0.63	1202	19380	12209	0.63	1229	18700	11781	0.63	1283
82	72	21675	11054	0.51	1175	20910	10664	0.51	1249	20400	10404	0.51	1283	19550	9971	0.51	1337
82	75	22780	8884	0.39	1229	21930	8553	0.39	1296	21420	8354	0.39	1337	20740	8089	0.39	1404
82	79	23460	6334	0.27	1296	22780	6151	0.27	1364	22440	6059	0.27	1404	21760	5875	0.27	1445
84	64	19975	15780	0.79	1080	19125	15109	0.79	1134	18360	14504	0.79	1188	17680	13967	0.79	1242
84	68	20825	13953	0.67	1134	19975	13383	0.67	1202	19380	12985	0.67	1229	18700	12529	0.67	1283
84	72	21675	11921	0.55	1175	20910	11501	0.55	1249	20400	11220	0.55	1283	19550	10753	0.55	1337
84	75	22780	9795	0.43	1229	21930	9430	0.43	1296	21420	9211	0.43	1337	20740	8918	0.43	1404
84	79	23460	7273	0.31	1296	22780	7062	0.31	1364	22440	6956	0.31	1404	21760	6746	0.31	1445
86	64	19975	16579	0.83	1080	19125	15874	0.83	1134	18360	15239	0.83	1188	17680	14674	0.83	1242
86	68	20825	14786	0.71	1134	19975	14182	0.71	1202	19380	13760	0.71	1229	18700	13277	0.71	1283
86	72	21675	12788	0.59	1175	20910	12337	0.59	1249	20400	12036	0.59	1283	19550	11535	0.59	1337
86	75	22780	10707	0.47	1229	21930	10307	0.47	1296	21420	10067	0.47	1337	20740	9748	0.47	1404
86	79	23460	8211	0.35	1296	22780	7973	0.35	1364	22440	7854	0.35	1404	21760	7616	0.35	1445
88	64	19975	17378	0.87	1080	19125	16639	0.87	1134	18360	15973	0.87	1188	17680	15382	0.87	1242
88	68	20825	15619	0.75	1134	19975	14981	0.75	1202	19380	14535	0.75	1229	18700	14025	0.75	1283
88	72	21675	13655	0.63	1175	20910	13173	0.63	1249	20400	12852	0.63	1283	19550	12317	0.63	1337
88	75	22780	11618	0.51	1229	21930	11184	0.51	1296	21420	10924	0.51	1337	20740	10577	0.51	1404
88	79	23460	9149	0.39	1296	22780	8884	0.39	1364	22440	8752	0.39	1404	21760	8486	0.39	1445
90	64	19975	18177	0.91	1080	19125	17404	0.91	1134	18360	16708	0.91	1188	17680	16089	0.91	1242
90	68	20825	16452	0.79	1134	19975	15780	0.79	1202	19380	15310	0.79	1229	18700	14773	0.79	1283
90	72	21675	14522	0.67	1175	20910	14010	0.67	1249	20400	13668	0.67	1283	19550	13099	0.67	1337
90	75	22780	12529	0.55	1229	21930	12062	0.55	1296	21420	11781	0.55	1337	20740	11407	0.55	1404
90	79	23460	10088	0.43	1296	22780	9795	0.43	1364	22440	9649	0.43	1404	21760	9357	0.43	1445

NOTE CA: Capacity (Btu/h) SHF: Sensible heat factor DB: Dry-bulb temperature
SHC: Sensible heat capacity (Btu/h) P.C. : Power consumption (W) WB: Wet-bulb temperature

MUFZ-KJ18NAHZ

CAPACITY (Btu/h): 17000 INPUT (W): 1350 SHF: 0.65

INDOOR DB (°F)	INDOOR WB (°F)	OUTDOOR DB (°F)											
		95				104				115			
		CA	SHC	SHF	P.C.	CA	SHC	SHF	P.C.	CA	SHC	SHF	P.C.
70	64	16660	7830	0.47	1323	15300	7191	0.47	1404	14110	6632	0.47	1458
70	68	17510	6129	0.35	1377	16320	5712	0.35	1445	15130	5296	0.35	1526
72	64	16660	8497	0.51	1323	15300	7803	0.51	1404	14110	7196	0.51	1458
72	68	17510	6829	0.39	1377	16320	6365	0.39	1445	15130	5901	0.39	1526
72	72	18530	5003	0.27	1431	17340	4682	0.27	1512	16150	4361	0.27	1566
73	64	16660	9163	0.55	1323	15300	8415	0.55	1404	14110	7761	0.55	1458
73	68	17510	7529	0.43	1377	16320	7018	0.43	1445	15130	6506	0.43	1526
73	72	18530	5744	0.31	1431	17340	5375	0.31	1512	16150	5007	0.31	1566
75	64	16660	9829	0.59	1323	15300	9027	0.59	1404	14110	8325	0.59	1458
75	68	17510	8230	0.47	1377	16320	7670	0.47	1445	15130	7111	0.47	1526
75	72	18530	6486	0.35	1431	17340	6069	0.35	1512	16150	5653	0.35	1566
75	75	19550	4497	0.23	1485	18360	4223	0.23	1553	17340	3988	0.23	1620
77	64	16660	10496	0.63	1323	15300	9639	0.63	1404	14110	8889	0.63	1458
77	68	17510	8930	0.51	1377	16320	8323	0.51	1445	15130	7716	0.51	1526
77	72	18530	7227	0.39	1431	17340	6763	0.39	1512	16150	6299	0.39	1566
77	75	19550	5279	0.27	1485	18360	4957	0.27	1553	17340	4682	0.27	1620
79	64	16660	11162	0.67	1323	15300	10251	0.67	1404	14110	9454	0.67	1458
79	68	17510	9631	0.55	1377	16320	8976	0.55	1445	15130	8322	0.55	1526
79	72	18530	7968	0.43	1431	17340	7456	0.43	1512	16150	6945	0.43	1566
79	75	19550	6061	0.31	1485	18360	5692	0.31	1553	17340	5375	0.31	1620
79	79	20570	3908	0.19	1539	19380	3682	0.19	1607	18190	3456	0.19	1674
81	64	16660	11829	0.71	1323	15300	10863	0.71	1404	14110	10018	0.71	1458
81	68	17510	10331	0.59	1377	16320	9629	0.59	1445	15130	8927	0.59	1526
81	72	18530	8709	0.47	1431	17340	8150	0.47	1512	16150	7591	0.47	1566
81	75	19550	6843	0.35	1485	18360	6426	0.35	1553	17340	6069	0.35	1620
81	79	20570	4731	0.23	1539	19380	4457	0.23	1607	18190	4184	0.23	1674
82	64	16660	12495	0.75	1323	15300	11475	0.75	1404	14110	10583	0.75	1458
82	68	17510	11031	0.63	1377	16320	10282	0.63	1445	15130	9532	0.63	1526
82	72	18530	9450	0.51	1431	17340	8843	0.51	1512	16150	8237	0.51	1566
82	75	19550	7625	0.39	1485	18360	7160	0.39	1553	17340	6763	0.39	1620
82	79	20570	5554	0.27	1539	19380	5233	0.27	1607	18190	4911	0.27	1674
84	64	16660	13161	0.79	1323	15300	12087	0.79	1404	14110	11147	0.79	1458
84	68	17510	11732	0.67	1377	16320	10934	0.67	1445	15130	10137	0.67	1526
84	72	18530	10192	0.55	1431	17340	9537	0.55	1512	16150	8883	0.55	1566
84	75	19550	8407	0.43	1485	18360	7895	0.43	1553	17340	7456	0.43	1620
84	79	20570	6377	0.31	1539	19380	6008	0.31	1607	18190	5639	0.31	1674
86	64	16660	13828	0.83	1323	15300	12699	0.83	1404	14110	11711	0.83	1458
86	68	17510	12432	0.71	1377	16320	11587	0.71	1445	15130	10742	0.71	1526
86	72	18530	10933	0.59	1431	17340	10231	0.59	1512	16150	9529	0.59	1566
86	75	19550	9189	0.47	1485	18360	8629	0.47	1553	17340	8150	0.47	1620
86	79	20570	7200	0.35	1539	19380	6783	0.35	1607	18190	6367	0.35	1674
88	64	16660	14494	0.87	1323	15300	13311	0.87	1404	14110	12276	0.87	1458
88	68	17510	13133	0.75	1377	16320	12240	0.75	1445	15130	11348	0.75	1526
88	72	18530	11674	0.63	1431	17340	10924	0.63	1512	16150	10175	0.63	1566
88	75	19550	9971	0.51	1485	18360	9364	0.51	1553	17340	8843	0.51	1620
88	79	20570	8022	0.39	1539	19380	7558	0.39	1607	18190	7094	0.39	1674
90	64	16660	15161	0.91	1323	15300	13923	0.91	1404	14110	12840	0.91	1458
90	68	17510	13833	0.79	1377	16320	12893	0.79	1445	15130	11953	0.79	1526
90	72	18530	12415	0.67	1431	17340	11618	0.67	1512	16150	10821	0.67	1566
90	75	19550	10753	0.55	1485	18360	10098	0.55	1553	17340	9537	0.55	1620
90	79	20570	8845	0.43	1539	19380	8333	0.43	1607	18190	7822	0.43	1674

NOTE CA: Capacity (Btu/h) SHF: Sensible heat factor DB: Dry-bulb temperature
SHC: Sensible heat capacity (Btu/h) P.C. : Power consumption (W) WB: Wet-bulb temperature

13 CAPACITY CORRECTION RATIO CURVE FOR PIPING LENGTH

13-1. CAPACITY CORRECTION RATIO CURVE FOR PIPING LENGTH

Correction ratio of capacity according to the length of piping (cooling)

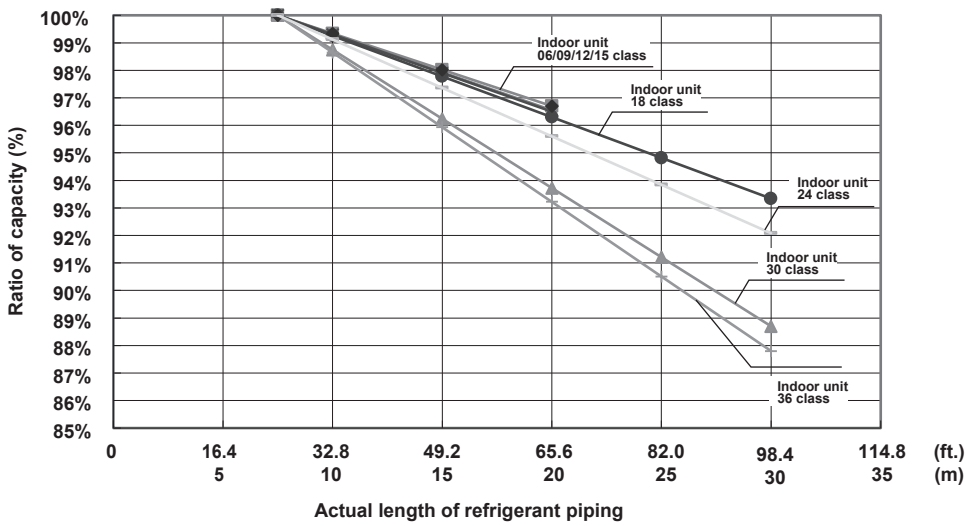

Correction ratio of capacity according to the length of piping (heating)

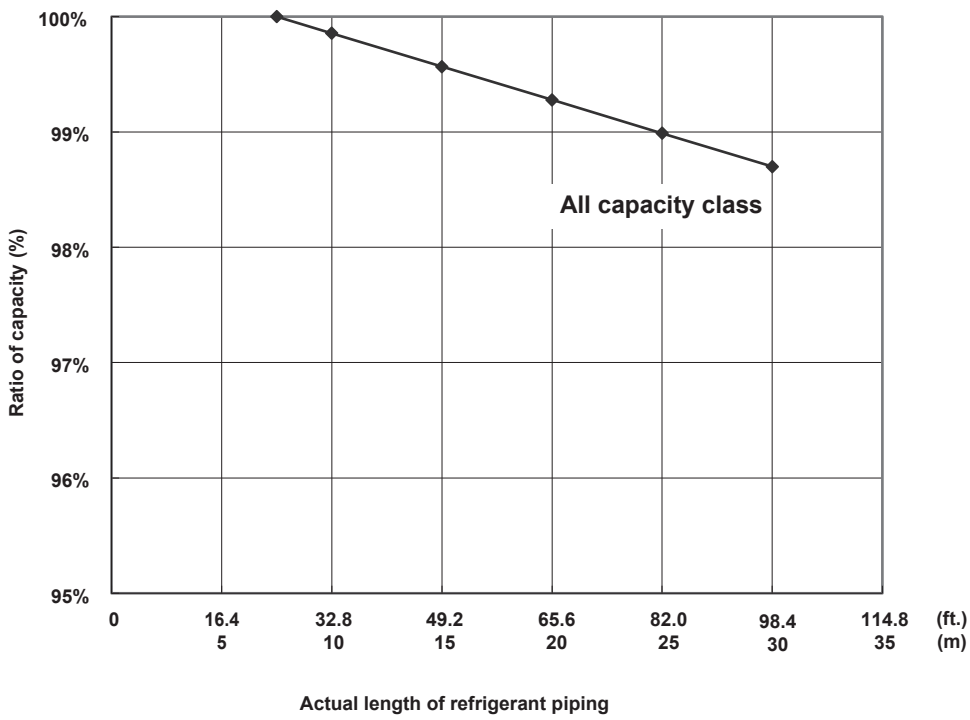

The length intended for the capacity calculation, which counts the length of refrigerant piping and the number of bends, is called actual length.

Length of refrigerant piping (ft.) + (Number of bends × 0.984 ft.) = Actual length of refrigerant piping (ft.)
[Length of refrigerant piping (m) + (Number of bends × 0.3 m) = Actual length of refrigerant piping (m)]

14 TEMPERATURE AND AIR FLOW DISTRIBUTIONS

MS-A09WA

Temperature distribution

<Cooling mode> Air volume: high
Air direction: auto (upward air flow)

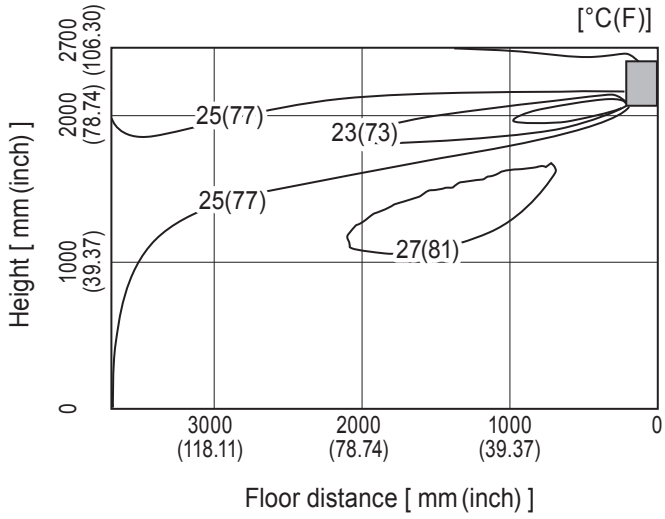

Airflow distribution

<Cooling mode> Air volume: high
Air direction: auto (upward air flow)

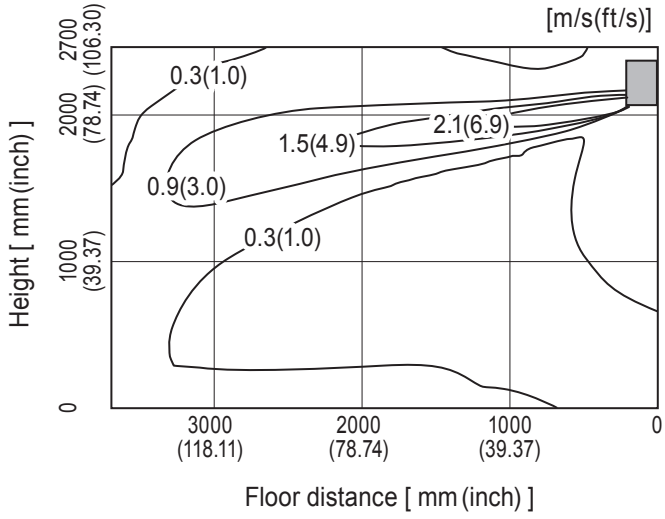

Note : These figures show typical airflow distributions in the conditions above. In the actual installation, they may differ from these figures under the influence of air temperature conditions, ceiling height, cooling/heating load,obstacles,etc.

MS-A12WA

Temperature distribution

<Cooling mode> Air volume: high
Air direction: auto (upward air flow)

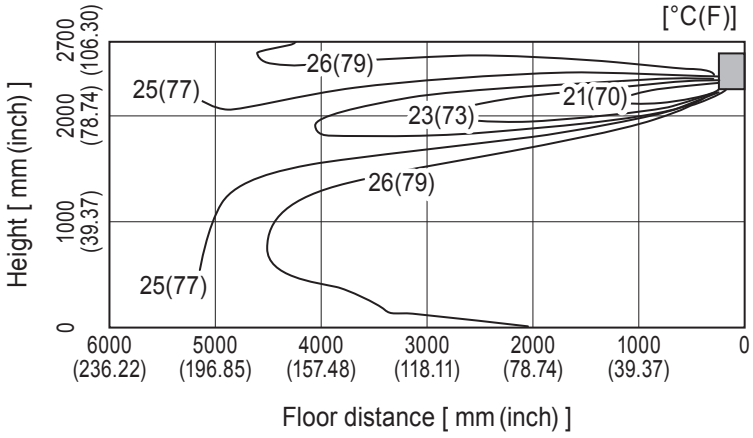

Airflow distribution

<Cooling mode> Air volume: high
Air direction: auto (upward air flow)

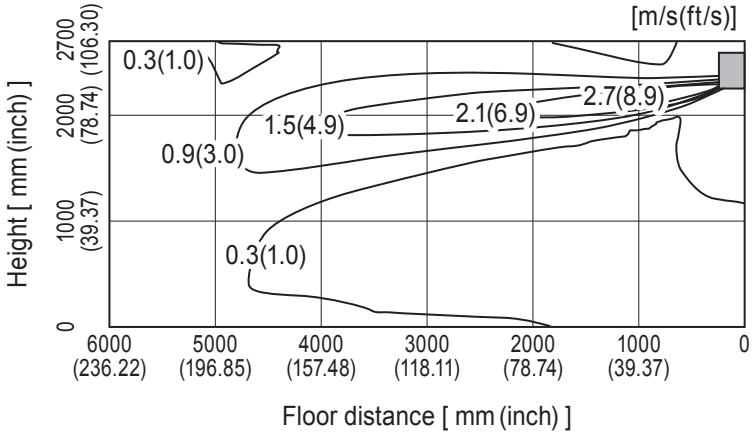

Note : These figures show typical airflow distributions in the conditions above. In the actual installation, they may differ from these figures under the influence of air temperature conditions, ceiling height, cooling/heating load,obstacles,etc.

MSZ-GL06NA

Temperature distribution

<Cooling mode> Air volume: high
Air direction: auto (upward air flow)

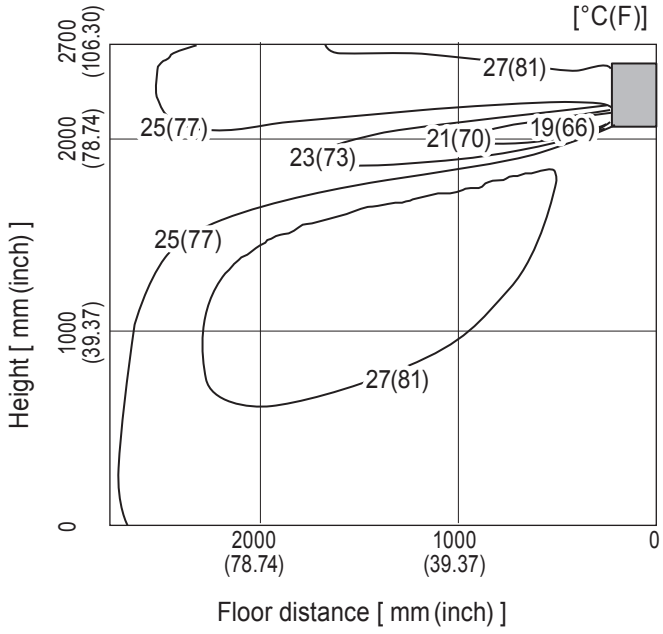

<Heating mode> Air volume: high
Air direction: auto (downward air flow)

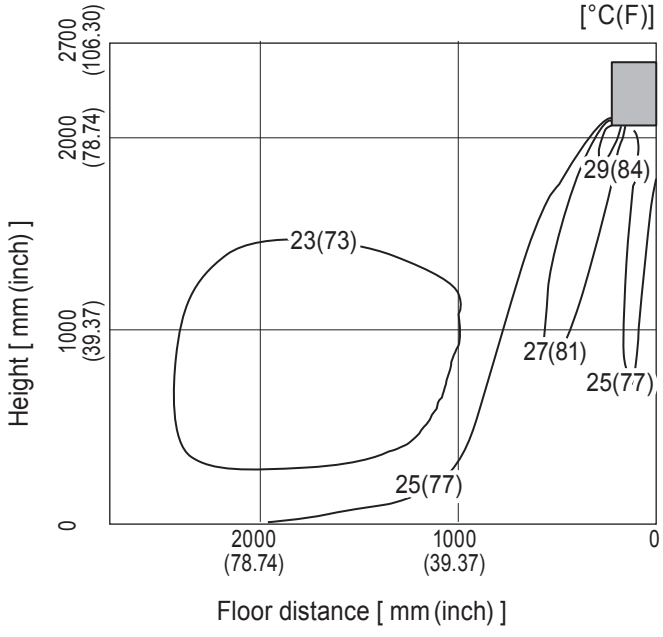

Note : These figures show typical airflow distributions in the conditions above. In the actual installation, they may differ from these figures under the influence of air temperature conditions, ceiling height, cooling/heating load,obstacles,etc.

MSZ-GL06NA

Airflow distribution

<Cooling mode> Air volume: high
Air direction: auto (upward air flow)

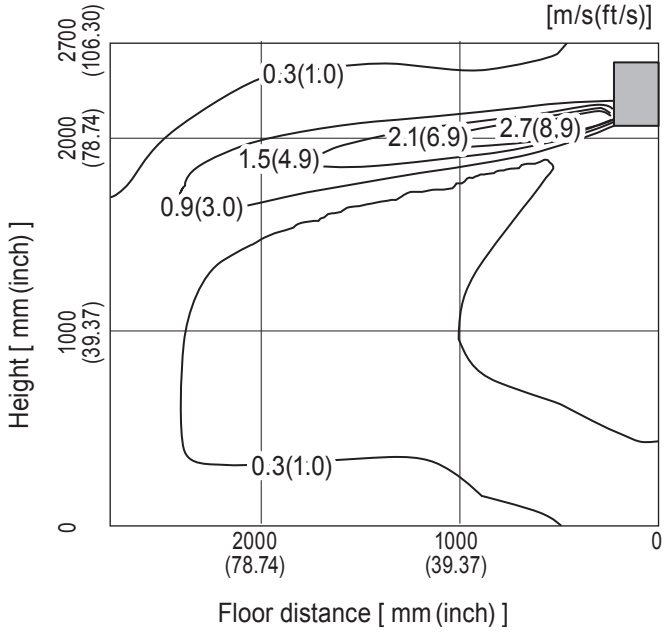

<Heating mode> Air volume: high
Air direction: auto (downward air flow)

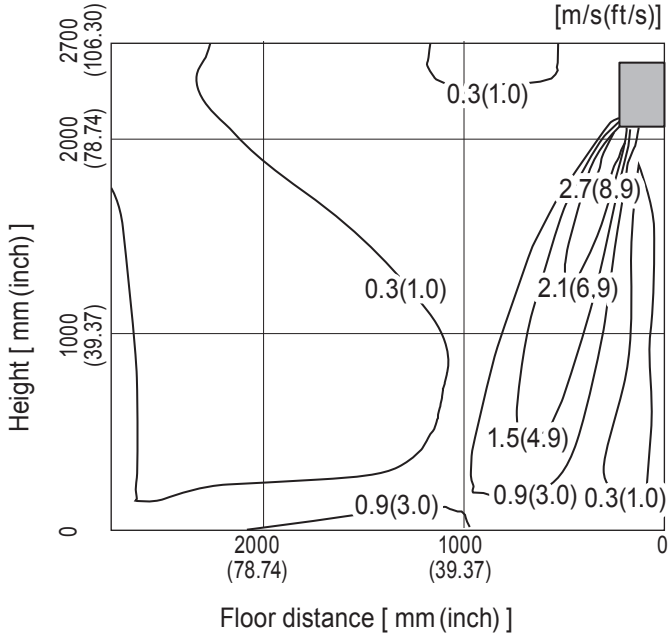

Note : These figures show typical airflow distributions in the conditions above. In the actual installation, they may differ from these figures under the influence of air temperature conditions, ceiling height, cooling/heating load,obstacles,etc.

MSZ-GL09NA

Temperature distribution

<Cooling mode> Air volume: high
Air direction: auto (upward air flow)

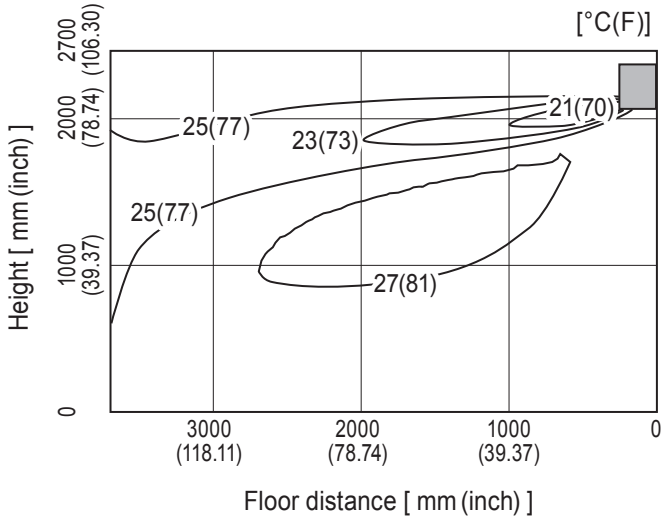

<Heating mode> Air volume: high
Air direction: auto (downward air flow)

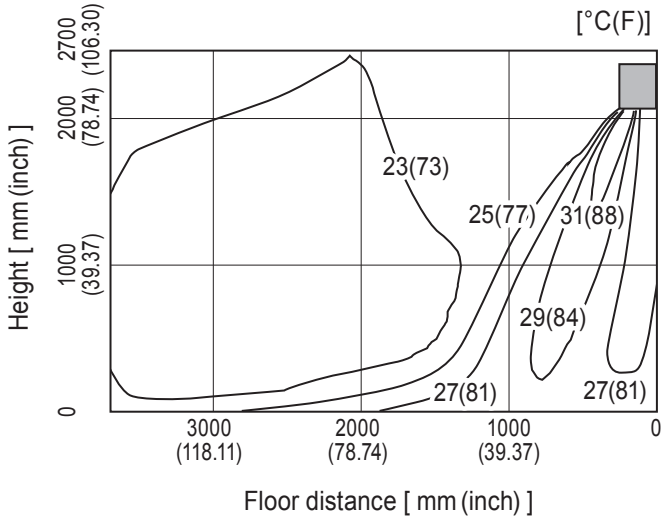

Note : These figures show typical airflow distributions in the conditions above. In the actual installation, they may differ from these figures under the influence of air temperature conditions, ceiling height, cooling/heating load,obstacles,etc.

MSZ-GL09NA

Airflow distribution

<Cooling mode> Air volume: high
Air direction: auto (upward air flow)

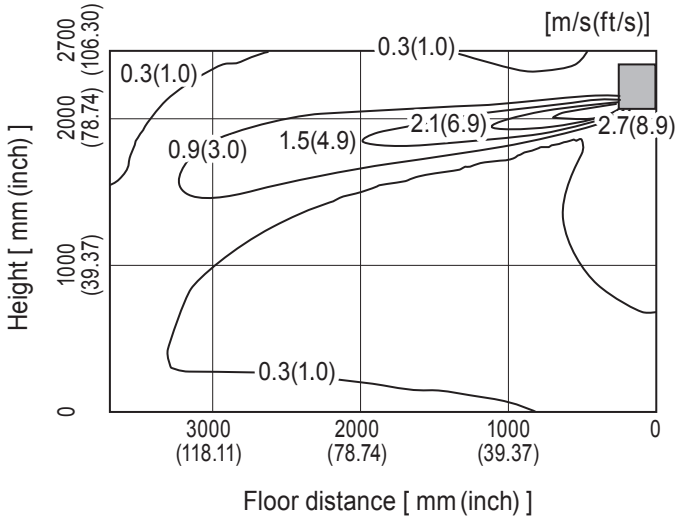

<Heating mode> Air volume: high
Air direction: auto (downward air flow)

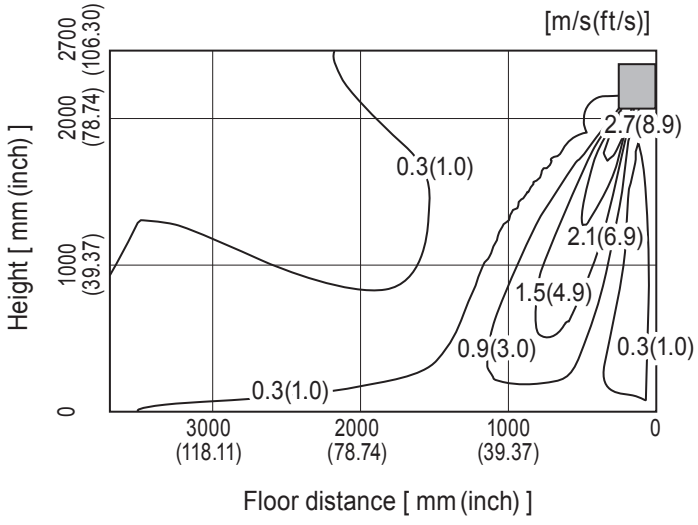

Note : These figures show typical airflow distributions in the conditions above. In the actual installation, they may differ from these figures under the influence of air temperature conditions, ceiling height, cooling/heating load,obstacles,etc.

MSZ-GL12NA

Temperature distribution

<Cooling mode>

Air volume: high
Air direction: auto (upward air flow)

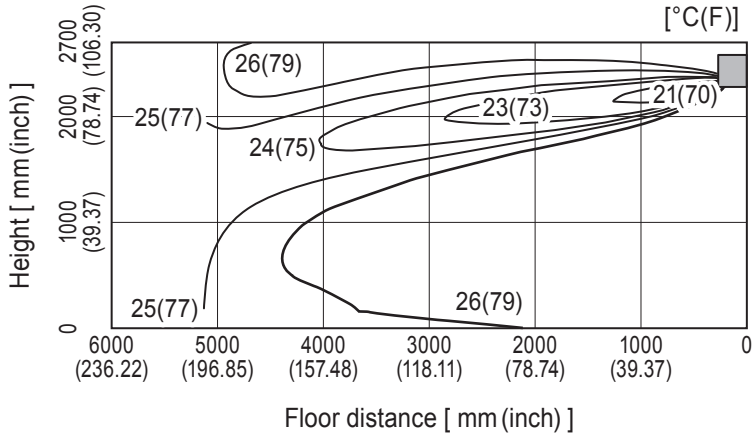

<Heating mode>

Air volume: high
Air direction: auto (downward air flow)

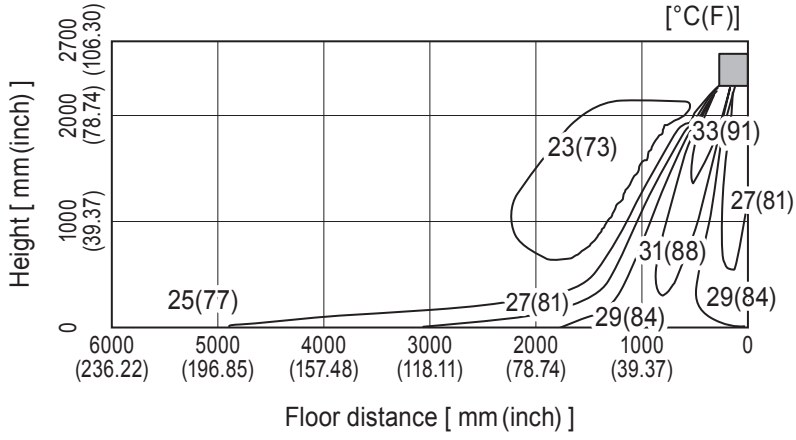

Note : These figures show typical airflow distributions in the conditions above. In the actual installation, they may differ from these figures under the influence of air temperature conditions, ceiling height, cooling/heating load,obstacles,etc.

MSZ-GL12NA

Airflow distribution

<Cooling mode>

Air volume: high
Air direction: auto (upward air flow)

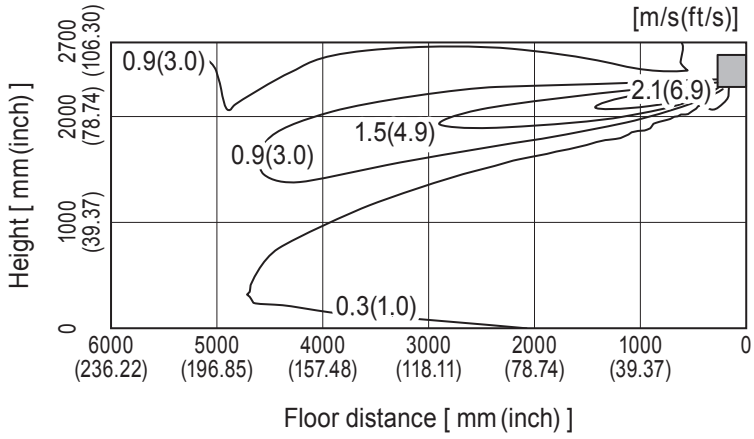

<Heating mode>

Air volume: high
Air direction: auto (downward air flow)

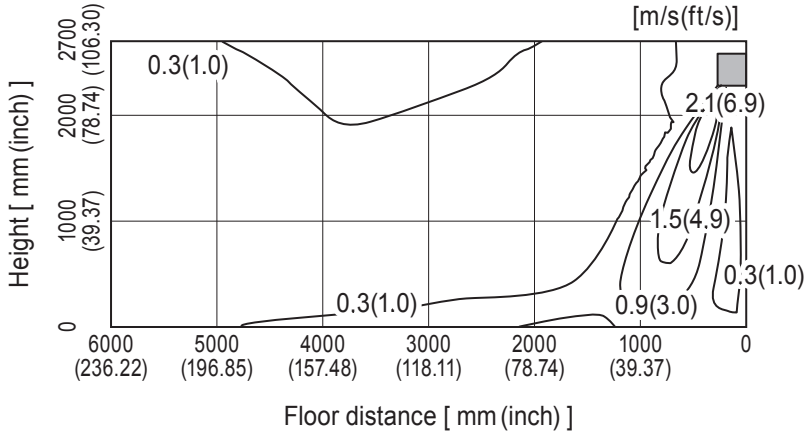

Note : These figures show typical airflow distributions in the conditions above. In the actual installation, they may differ from these figures under the influence of air temperature conditions, ceiling height, cooling/heating load,obstacles,etc.

MSZ-GL15NA

Temperature distribution

<Cooling mode>

Air volume: high
Air direction: auto (upward air flow)

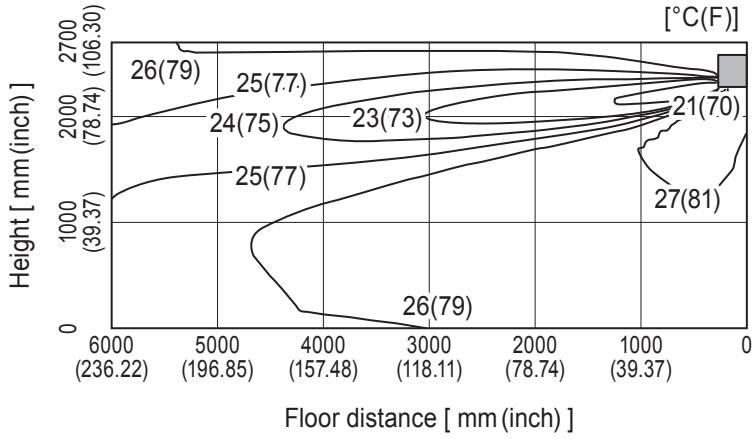

<Heating mode>

Air volume: high
Air direction: auto (downward air flow)

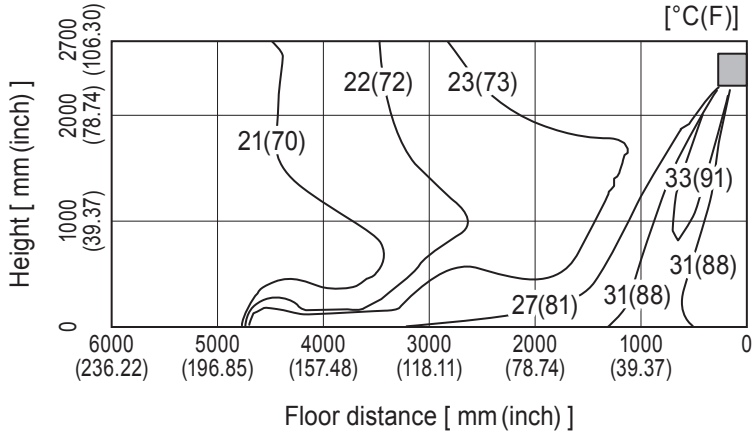

Note : These figures show typical airflow distributions in the conditions above. In the actual installation, they may differ from these figures under the influence of air temperature conditions, ceiling height, cooling/heating load,obstacles,etc.

MSZ-GL15NA

Airflow distribution

<Cooling mode>

Air volume: high
Air direction: auto (upward air flow)

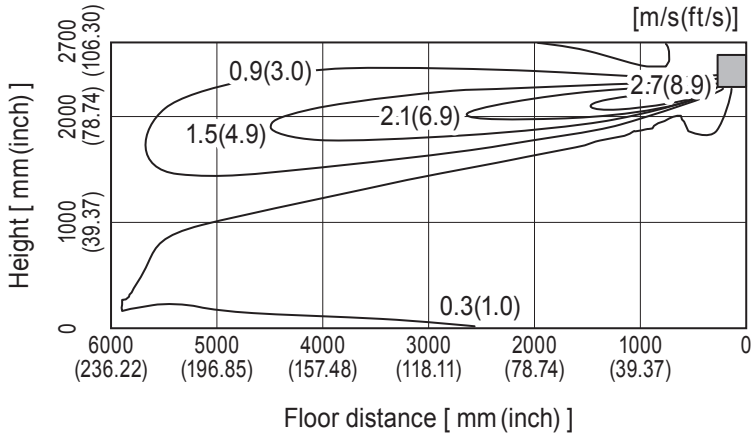

<Heating mode>

Air volume: high
Air direction: auto (downward air flow)

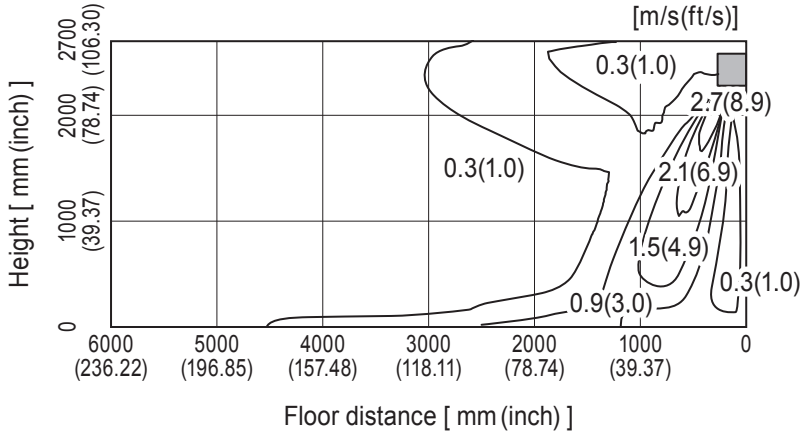

Note : These figures show typical airflow distributions in the conditions above. In the actual installation, they may differ from these figures under the influence of air temperature conditions, ceiling height, cooling/heating load,obstacles,etc.

MSZ-GL18NA

Temperature distribution

<Cooling mode> Air volume: high
Air direction: auto (upward air flow)

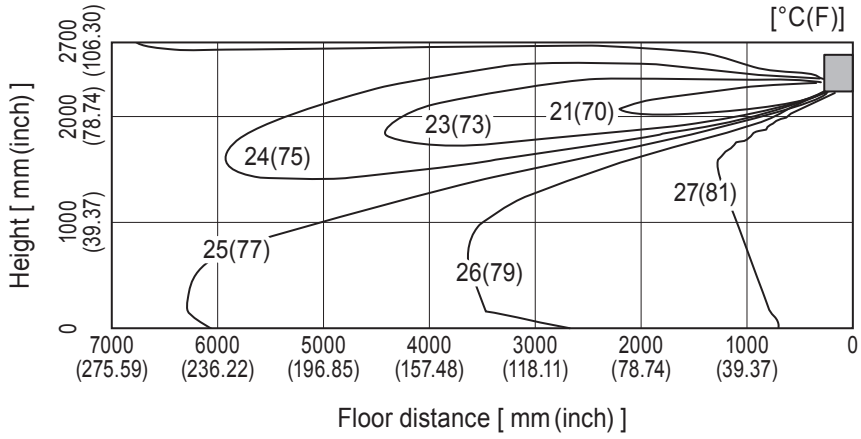

<Heating mode> Air volume: high
Air direction: auto (downward air flow)

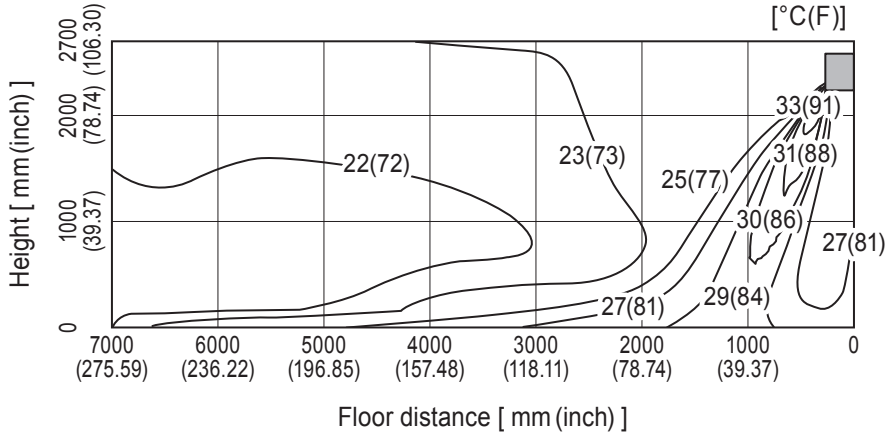

Note : These figures show typical airflow distributions in the conditions above. In the actual installation, they may differ from these figures under the influence of air temperature conditions, ceiling height, cooling/heating load,obstacles,etc.

MSZ-GL18NA

Airflow distribution

<Cooling mode> Air volume: high
Air direction: auto (upward air flow)

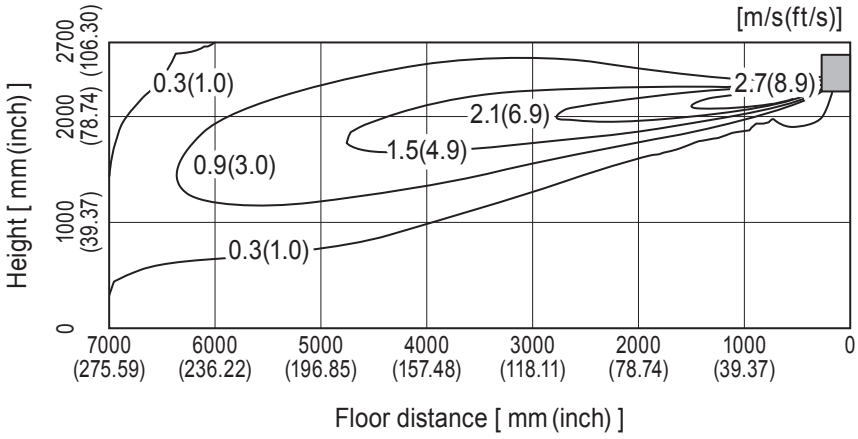

<Heating mode> Air volume: high
Air direction: auto (downward air flow)

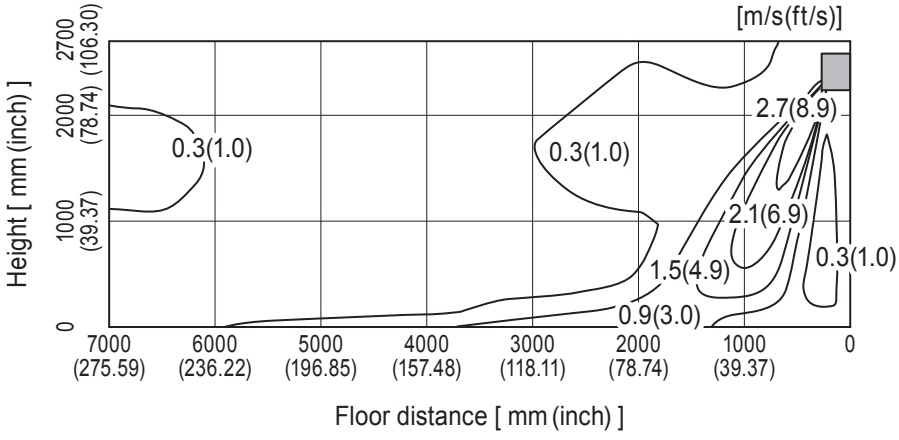

Note : These figures show typical airflow distributions in the conditions above. In the actual installation, they may differ from these figures under the influence of air temperature conditions, ceiling height, cooling/heating load,obstacles,etc.

MSZ-GL24NA

Temperature distribution

<Cooling mode> Air volume: high
Air direction: auto (upward air flow)

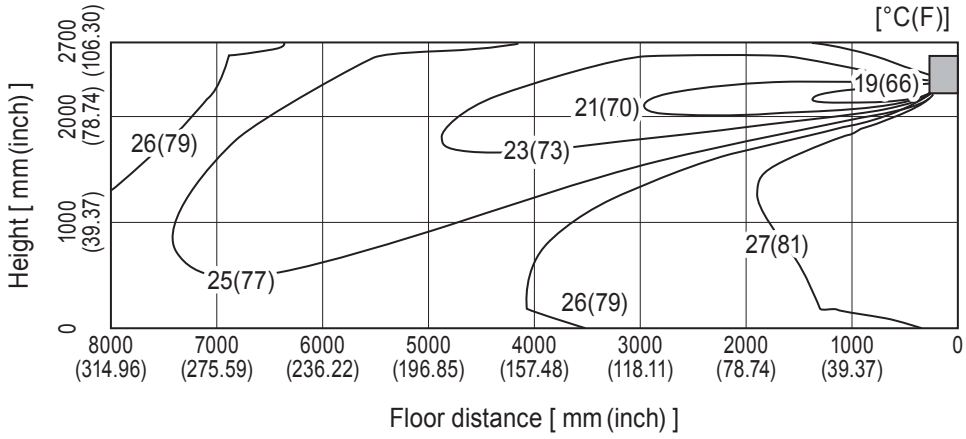

<Heating mode> Air volume: high
Air direction: auto (downward air flow)

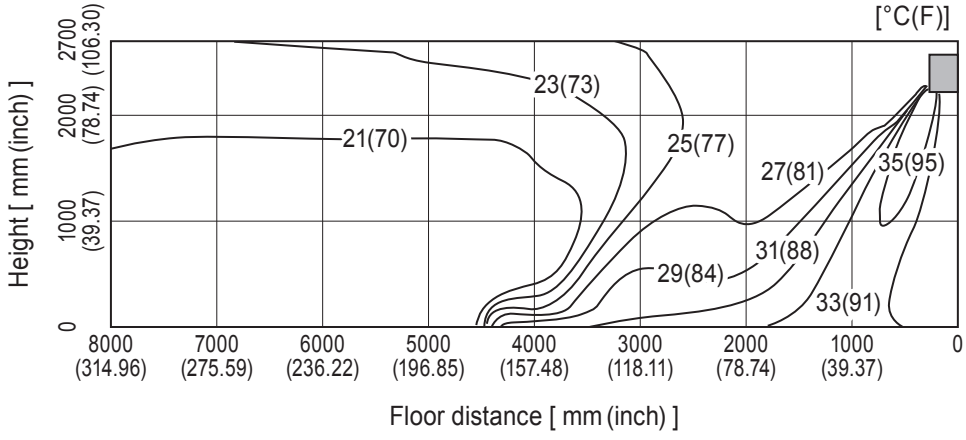

Note : These figures show typical airflow distributions in the conditions above. In the actual installation, they may differ from these figures under the influence of air temperature conditions, ceiling height, cooling/heating load,obstacles,etc.

MSZ-GL24NA

Airflow distribution

<Cooling mode> Air volume: high
Air direction: auto (upward air flow)

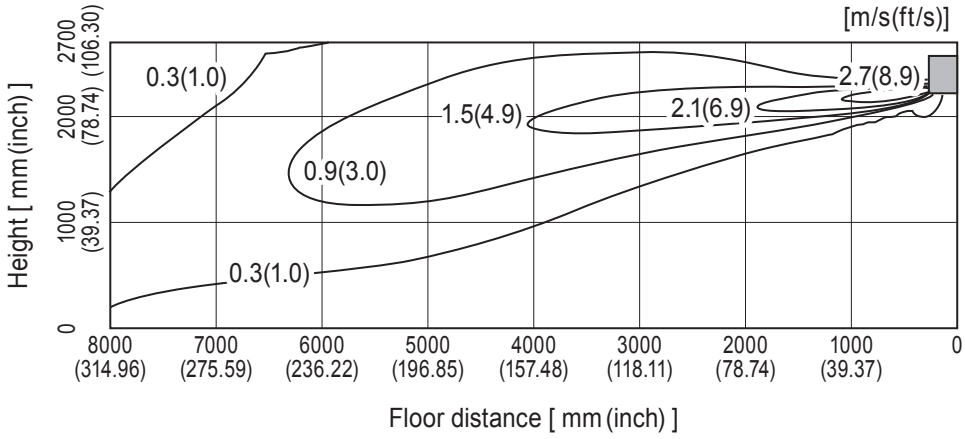

<Heating mode> Air volume: high
Air direction: auto (downward air flow)

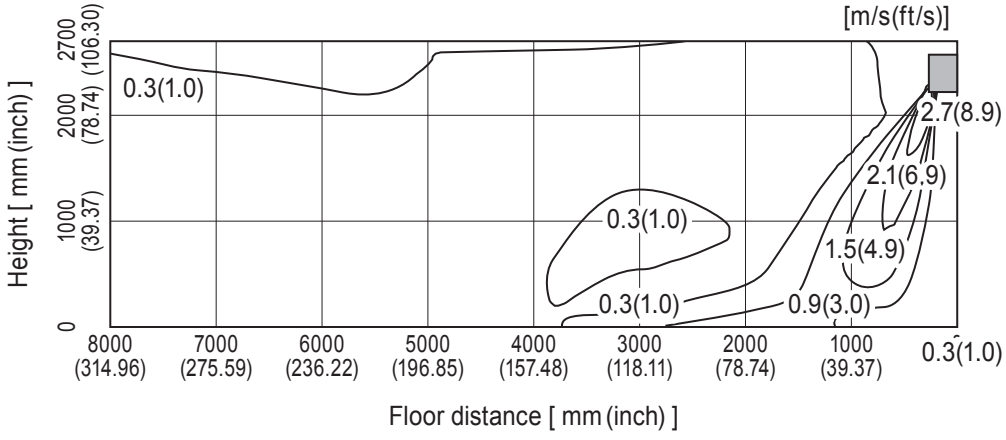

Note : These figures show typical airflow distributions in the conditions above. In the actual installation, they may differ from these figures under the influence of air temperature conditions, ceiling height, cooling/heating load,obstacles,etc.

MSY-GL09NA

Temperature distribution

<Cooling mode> Air volume: high
Air direction: auto (upward air flow)

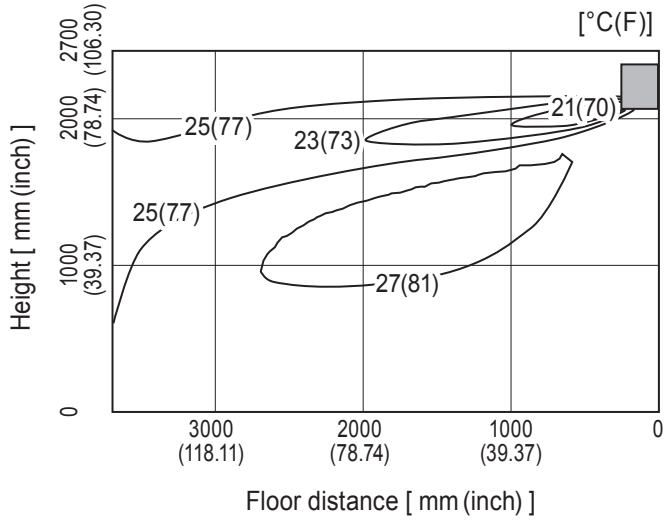

Airflow distribution

<Cooling mode> Air volume: high
Air direction: auto (upward air flow)

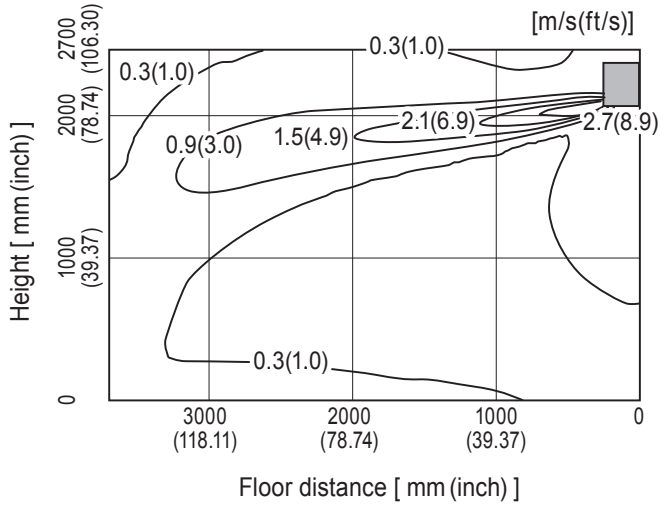

Note : These figures show typical airflow distributions in the conditions above. In the actual installation, they may differ from these figures under the influence of air temperature conditions, ceiling height, cooling/heating load,obstacles,etc.

MSY-GL12NA

Temperature distribution

<Cooling mode> Air volume: high
Air direction: auto (upward air flow)

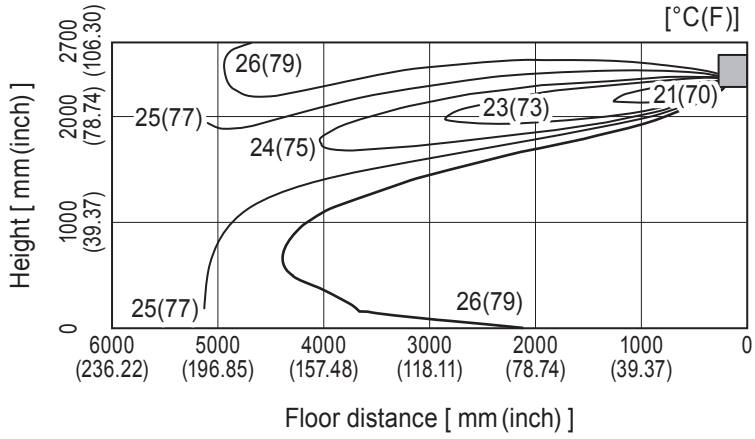

Airflow distribution

<Cooling mode> Air volume: high
Air direction: auto (upward air flow)

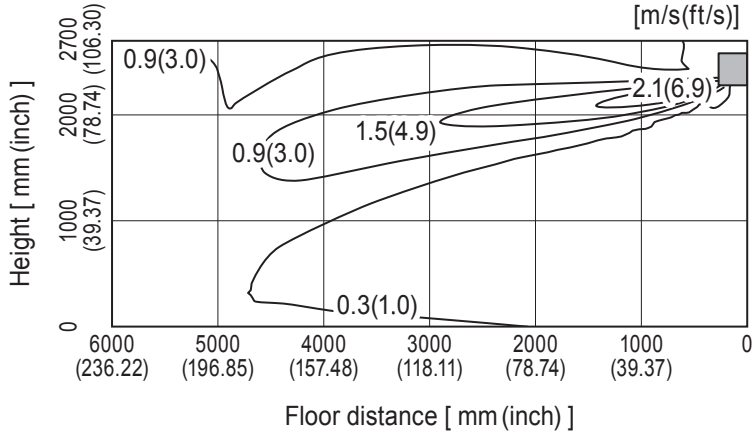

Note : These figures show typical airflow distributions in the conditions above. In the actual installation, they may differ from these figures under the influence of air temperature conditions, ceiling height, cooling/heating load,obstacles,etc.

MSY-GL15NA

Temperature distribution

<Cooling mode> Air volume: high
Air direction: auto (upward air flow)

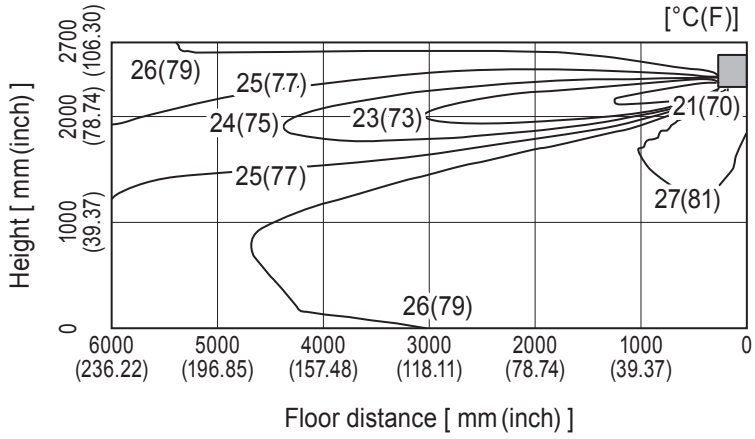

Airflow distribution

<Cooling mode> Air volume: high
Air direction: auto (upward air flow)

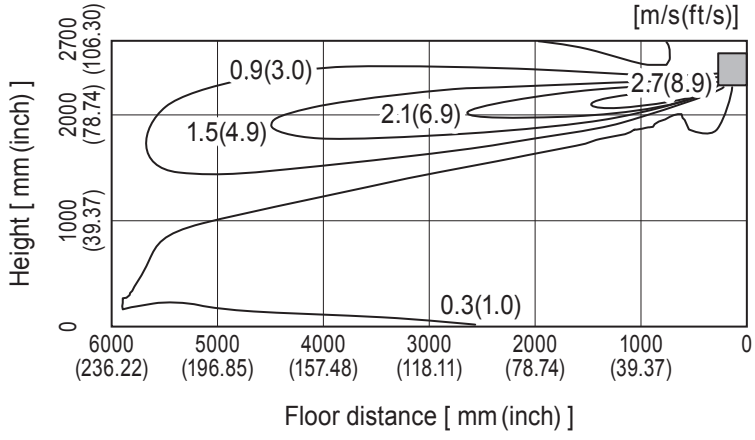

Note : These figures show typical airflow distributions in the conditions above. In the actual installation, they may differ from these figures under the influence of air temperature conditions, ceiling height, cooling/heating load,obstacles,etc.

MSY-GL18NA

Temperature distribution

<Cooling mode> Air volume: high
Air direction: auto (upward air flow)

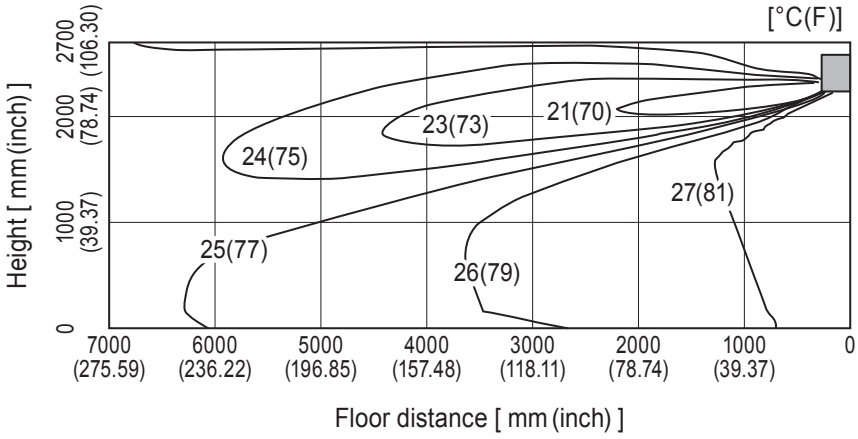

Airflow distribution

<Cooling mode> Air volume: high
Air direction: auto (upward air flow)

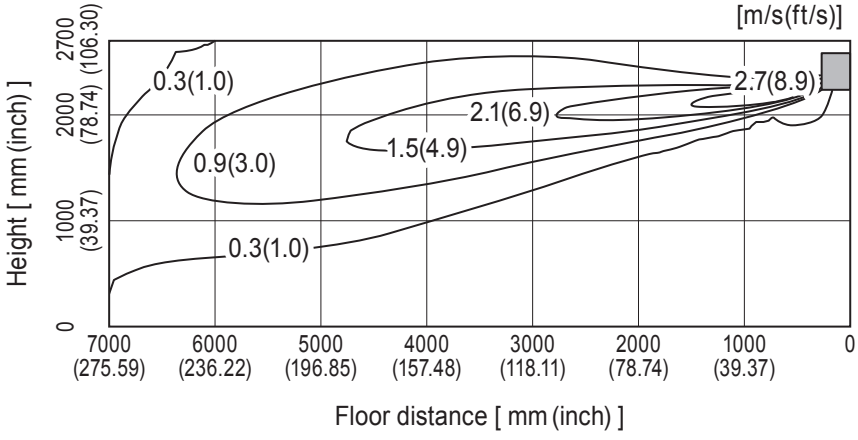

Note : These figures show typical airflow distributions in the conditions above. In the actual installation, they may differ from these figures under the influence of air temperature conditions, ceiling height, cooling/heating load,obstacles,etc.

MSY-GL24NA

Temperature distribution

<Cooling mode> Air volume: high
Air direction: auto (upward air flow)

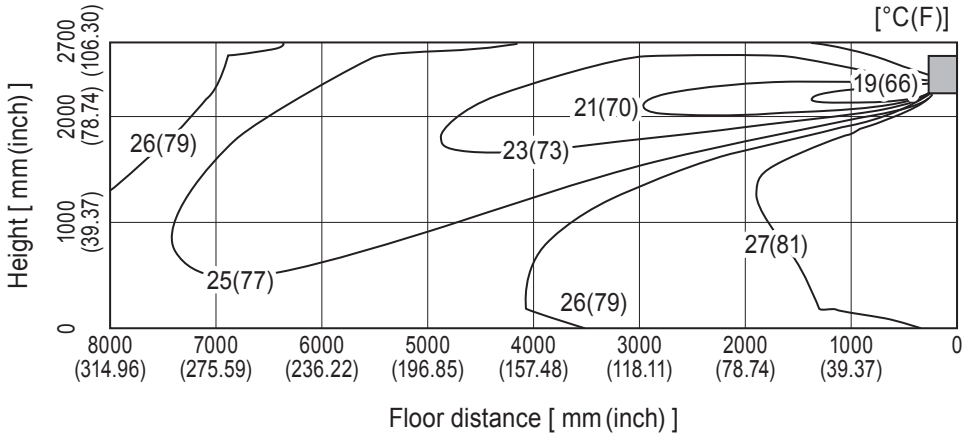

Airflow distribution

<Cooling mode> Air volume: high
Air direction: auto (upward air flow)

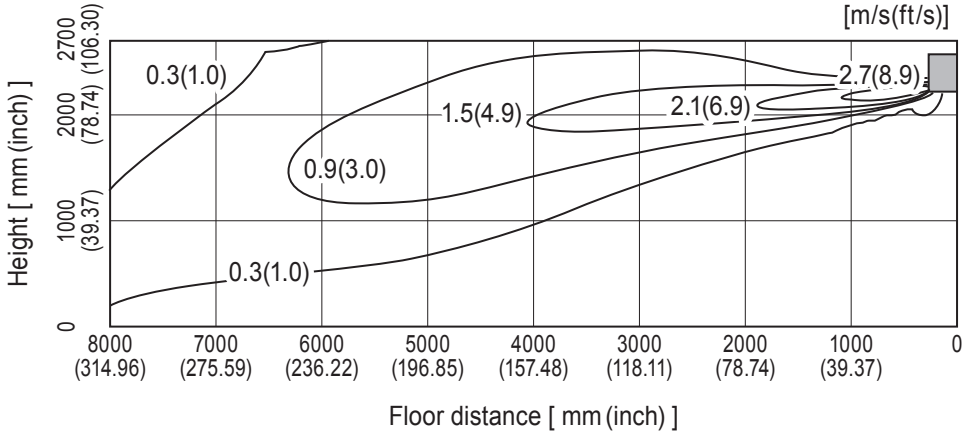

Note : These figures show typical airflow distributions in the conditions above. In the actual installation, they may differ from these figures under the influence of air temperature conditions, ceiling height, cooling/heating load,obstacles,etc.

MSZ-HM09NA

Temperature distribution

<Cooling mode> Air volume: high
Air direction: auto (upward air flow)

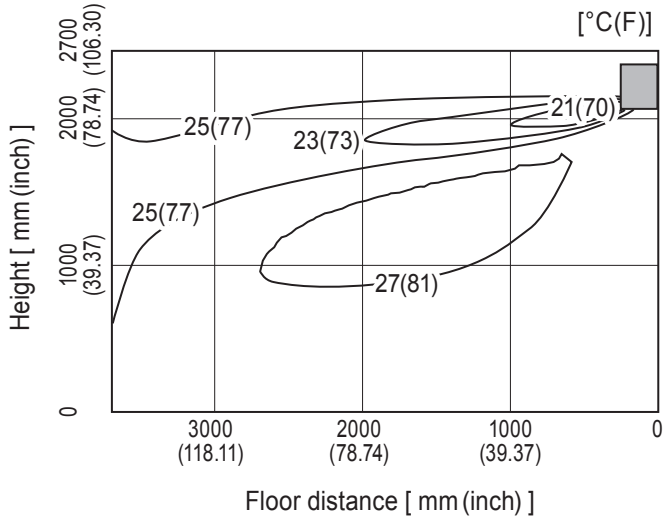

<Heating mode> Air volume: high
Air direction: auto (downward air flow)

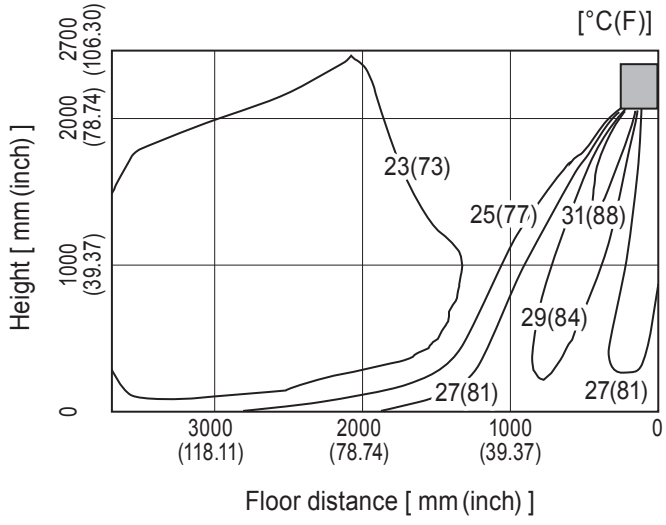

Note : These figures show typical airflow distributions in the conditions above. In the actual installation, they may differ from these figures under the influence of air temperature conditions, ceiling height, cooling/heating load,obstacles,etc.

MSZ-HM09NA

Airflow distribution

<Cooling mode> Air volume: high
Air direction: auto (upward air flow)

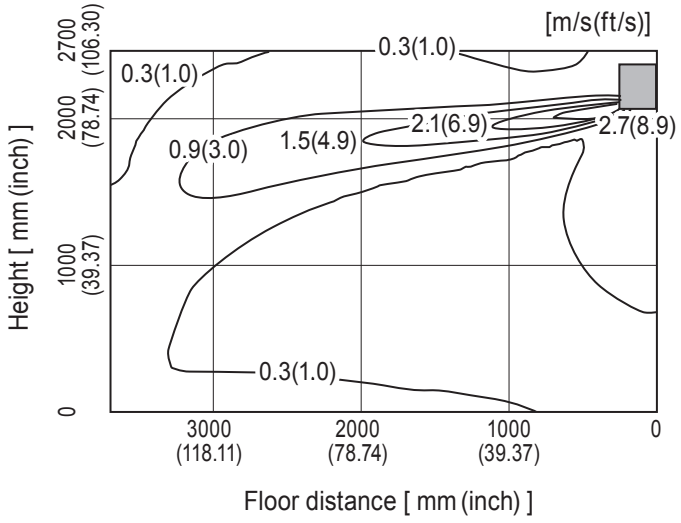

<Heating mode> Air volume: high
Air direction: auto (downward air flow)

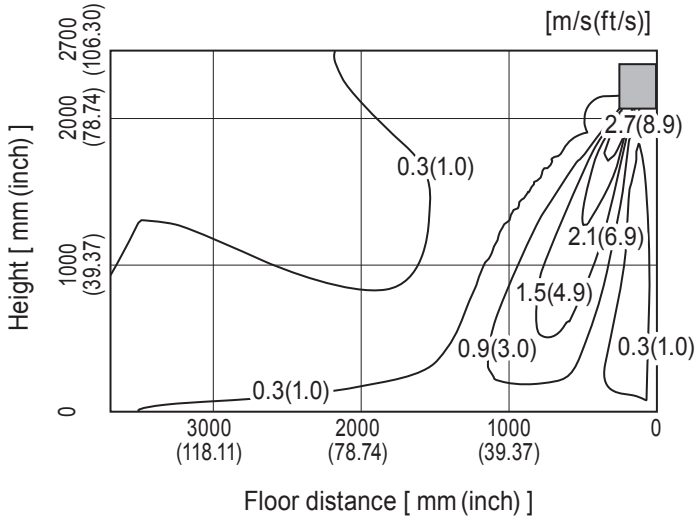

Note : These figures show typical airflow distributions in the conditions above. In the actual installation, they may differ from these figures under the influence of air temperature conditions, ceiling height, cooling/heating load,obstacles,etc.

MSZ-HM12NA

Temperature distribution

<Cooling mode> Air volume: high
Air direction: auto (upward air flow)

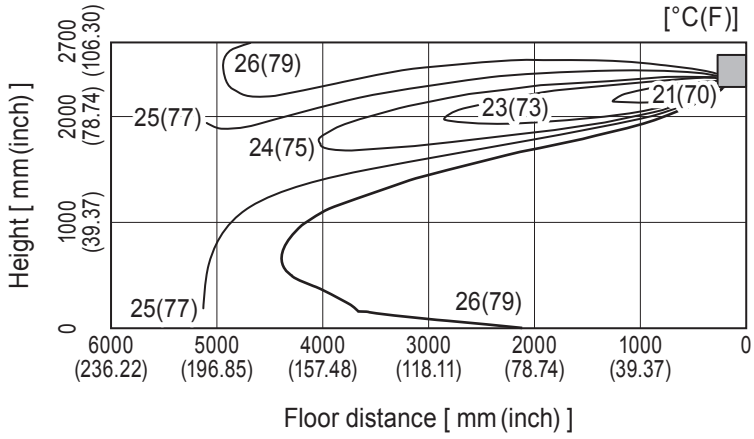

<Heating mode> Air volume: high
Air direction: auto (downward air flow)

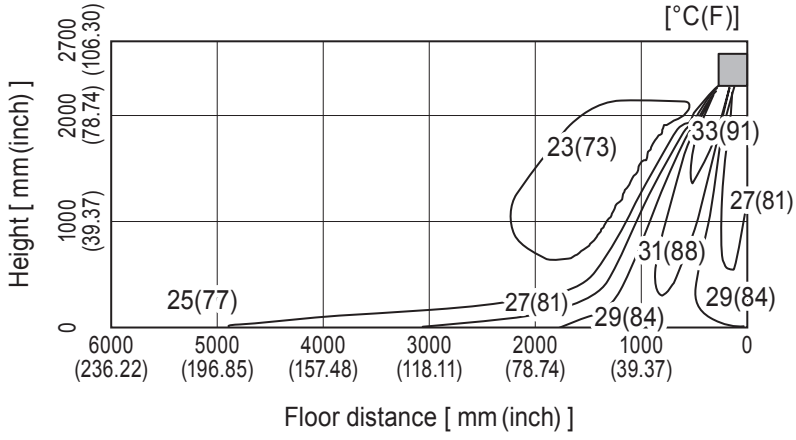

Note : These figures show typical airflow distributions in the conditions above. In the actual installation, they may differ from these figures under the influence of air temperature conditions, ceiling height, cooling/heating load,obstacles,etc.

MSZ-HM12NA

Airflow distribution

<Cooling mode>

Air volume: high
Air direction: auto (upward air flow)

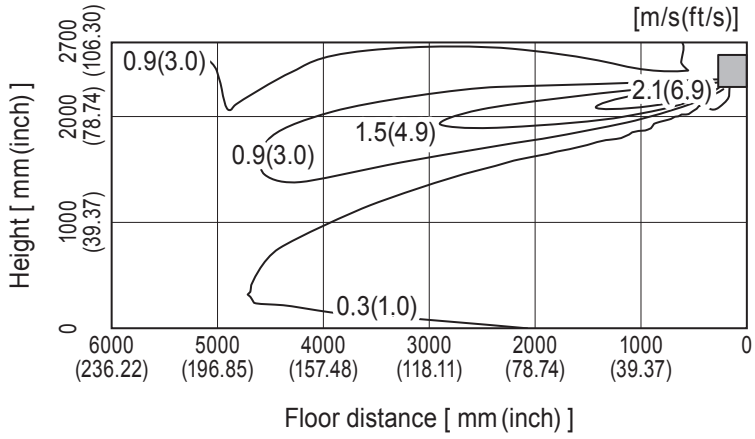

<Heating mode>

Air volume: high
Air direction: auto (downward air flow)

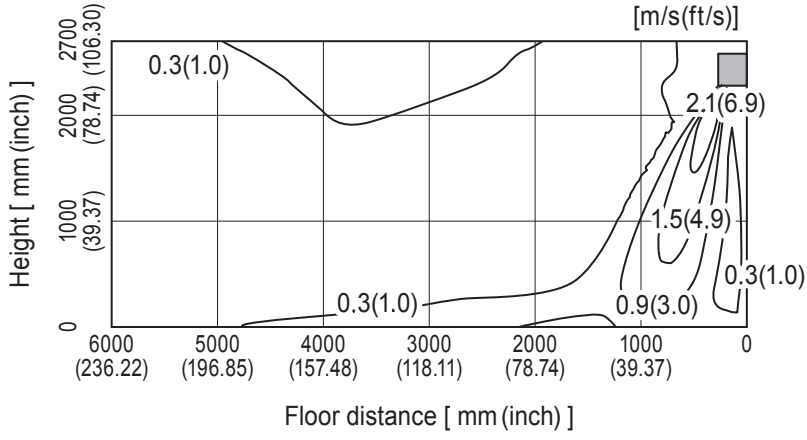

Note : These figures show typical airflow distributions in the conditions above. In the actual installation, they may differ from these figures under the influence of air temperature conditions, ceiling height, cooling/heating load,obstacles,etc.

MSZ-HM15NA

Temperature distribution

<Cooling mode> Air volume: high
Air direction: auto (upward air flow)

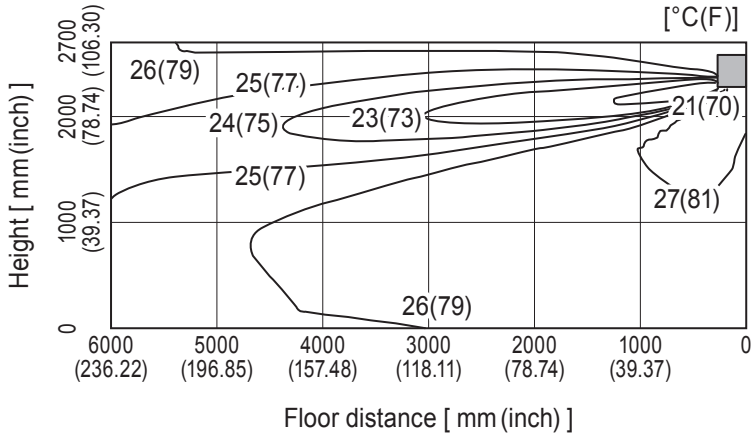

<Heating mode> Air volume: high
Air direction: auto (downward air flow)

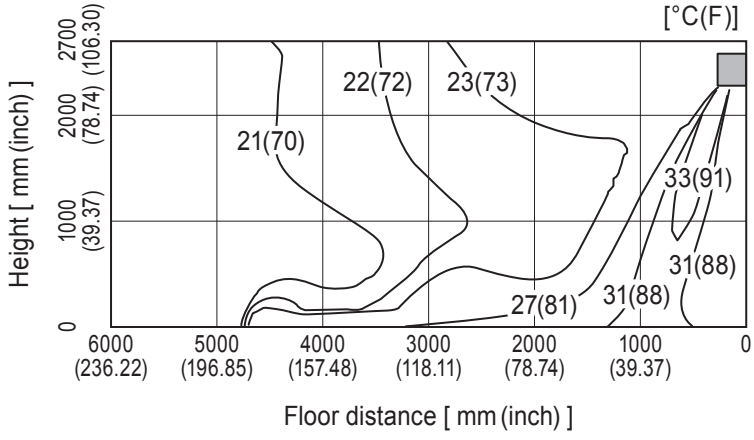

Note : These figures show typical airflow distributions in the conditions above. In the actual installation, they may differ from these figures under the influence of air temperature conditions, ceiling height, cooling/heating load,obstacles,etc.

MSZ-HM15NA

Airflow distribution

<Cooling mode>

Air volume: high
Air direction: auto (upward air flow)

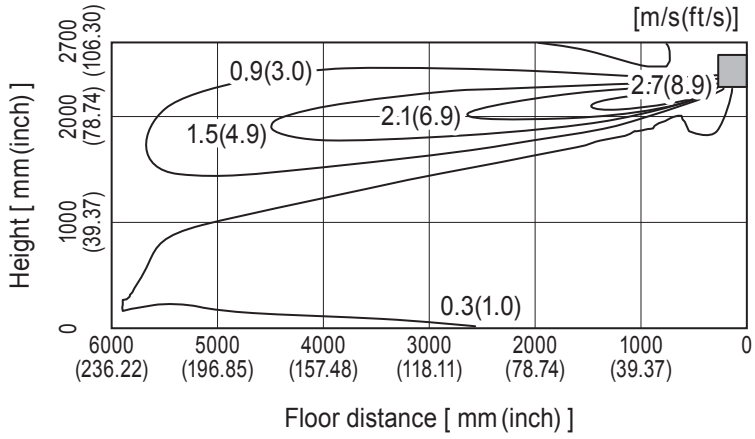

<Heating mode>

Air volume: high
Air direction: auto (downward air flow)

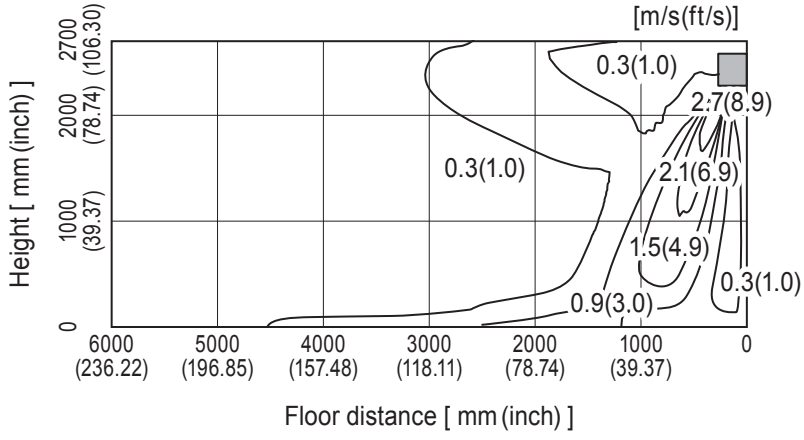

Note : These figures show typical airflow distributions in the conditions above. In the actual installation, they may differ from these figures under the influence of air temperature conditions, ceiling height, cooling/heating load,obstacles,etc.

MSZ-HM18NA

Temperature distribution

<Cooling mode> Air volume: high
Air direction: auto (upward air flow)

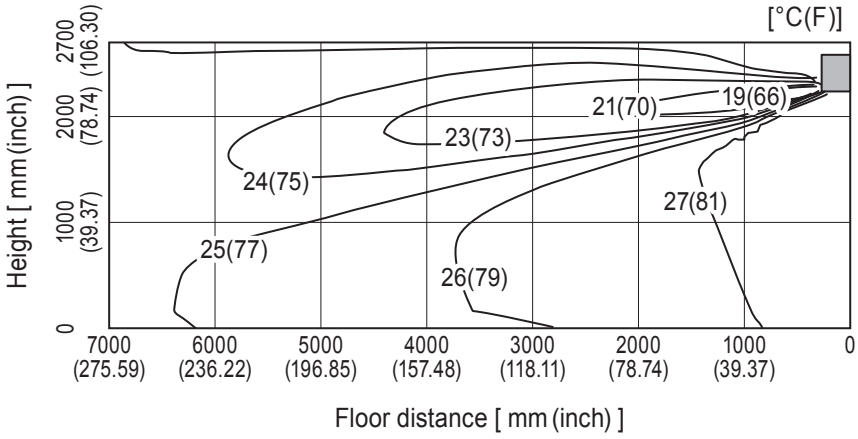

<Heating mode> Air volume: high
Air direction: auto (downward air flow)

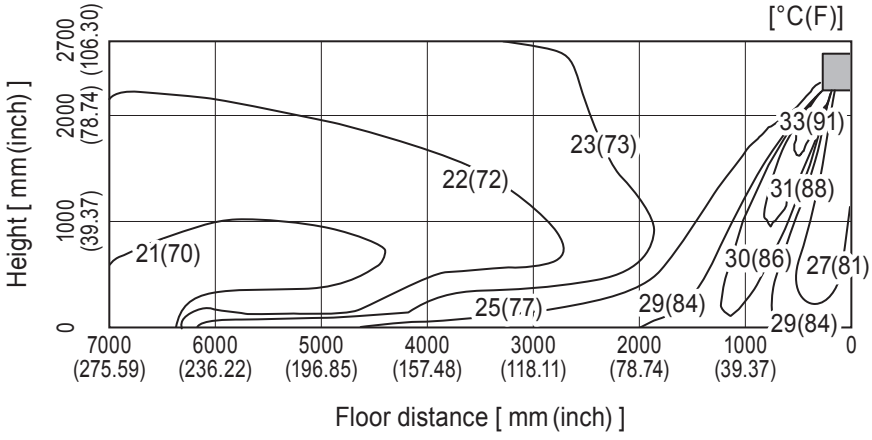

Note : These figures show typical airflow distributions in the conditions above. In the actual installation, they may differ from these figures under the influence of air temperature conditions, ceiling height, cooling/heating load,obstacles,etc.

MSZ-HM18NA

Airflow distribution

<Cooling mode> Air volume: high
Air direction: auto (upward air flow)

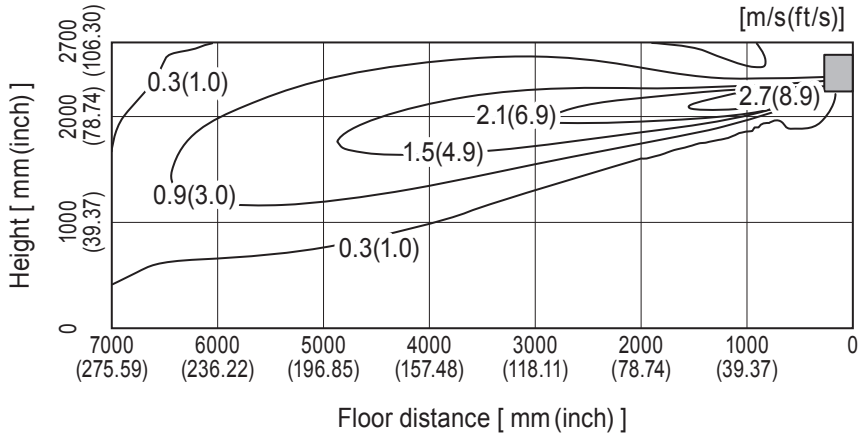

<Heating mode> Air volume: high
Air direction: auto (downward air flow)

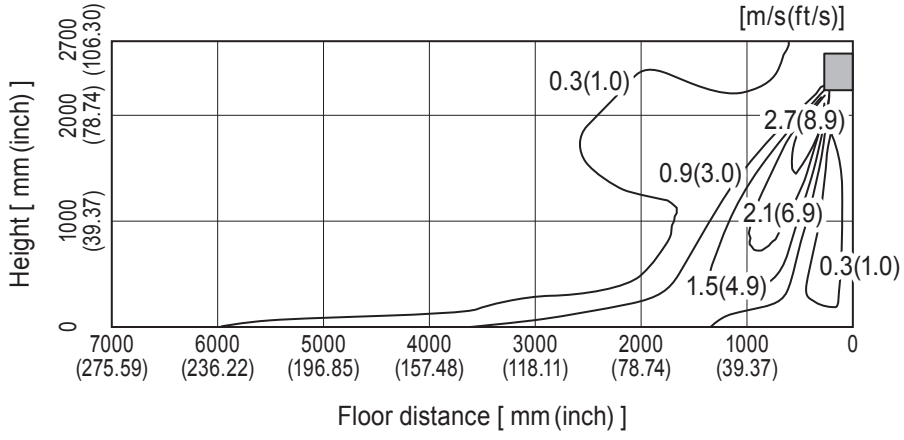

Note : These figures show typical airflow distributions in the conditions above. In the actual installation, they may differ from these figures under the influence of air temperature conditions, ceiling height, cooling/heating load,obstacles,etc.

MSZ-HM24NA

Temperature distribution

<Cooling mode> Air volume: high
Air direction: auto (upward air flow)

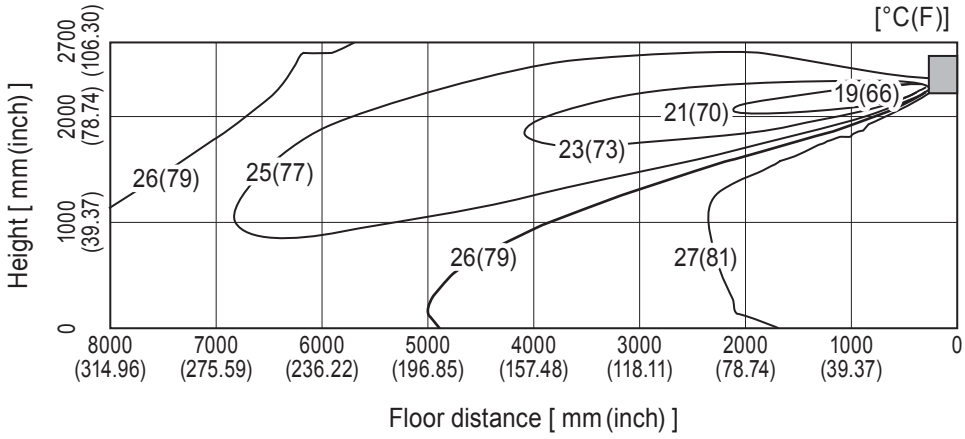

<Heating mode> Air volume: high
Air direction: auto (downward air flow)

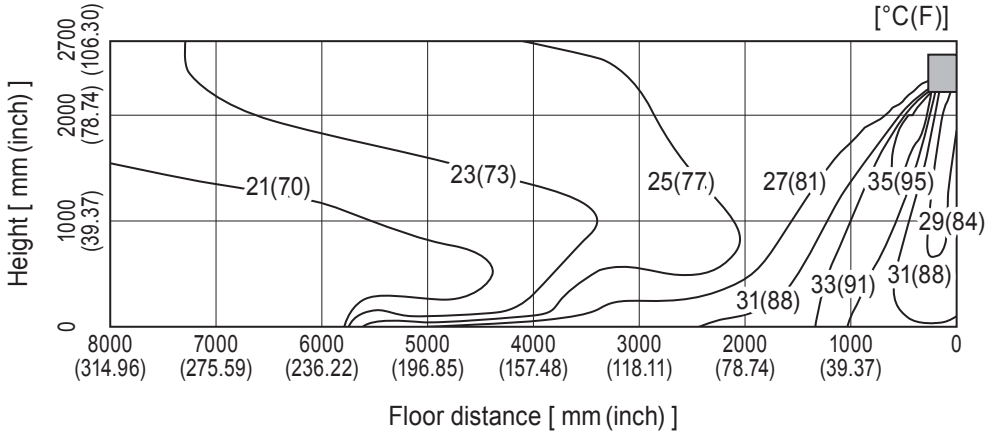

Note : These figures show typical airflow distributions in the conditions above. In the actual installation, they may differ from these figures under the influence of air temperature conditions, ceiling height, cooling/heating load,obstacles,etc.

MSZ-HM24NA

Airflow distribution

<Cooling mode> Air volume: high
Air direction: auto (upward air flow)

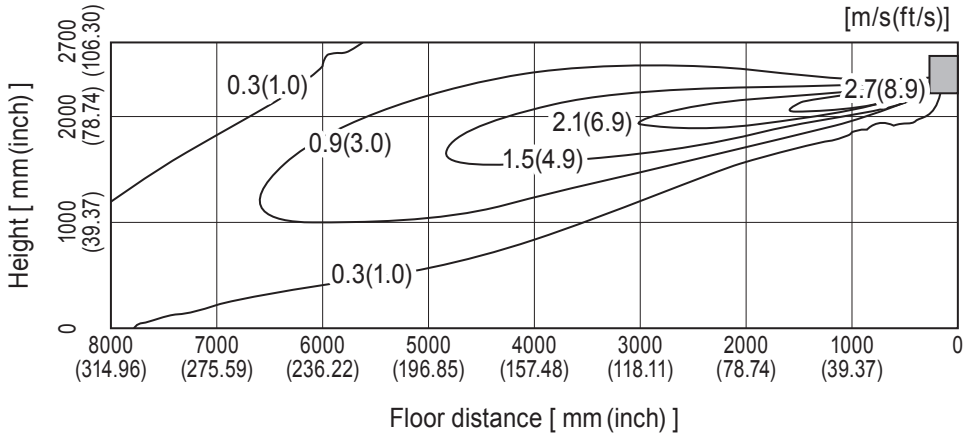

<Heating mode> Air volume: high
Air direction: auto (downward air flow)

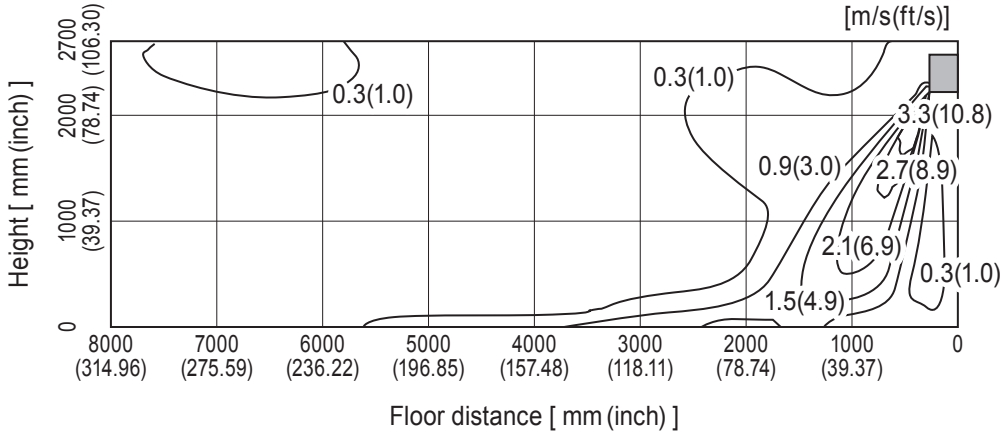

Note : These figures show typical airflow distributions in the conditions above. In the actual installation, they may differ from these figures under the influence of air temperature conditions, ceiling height, cooling/heating load,obstacles,etc.

MSZ-FH06NA

Temperature distribution

<Cooling mode> Air volume: high
Air direction: auto (upward air flow)

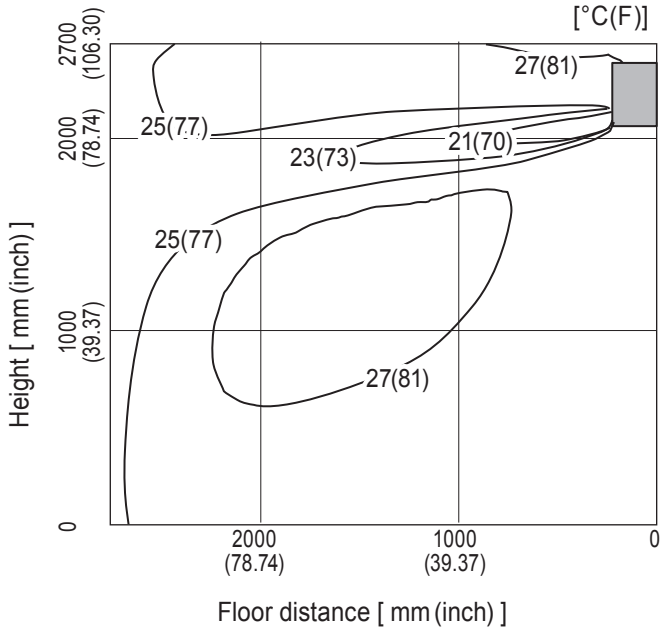

<Heating mode> Air volume: high
Air direction: auto (downward air flow)

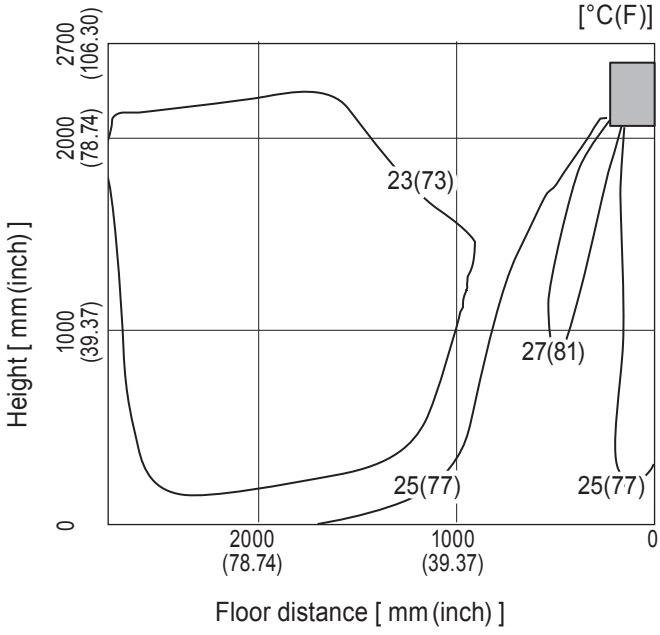

Note : These figures show typical airflow distributions in the conditions above. In the actual installation, they may differ from these figures under the influence of air temperature conditions, ceiling height, cooling/heating load,obstacles,etc.

MSZ-FH06NA

Airflow distribution

<Cooling mode> Air volume: high
Air direction: auto (upward air flow)

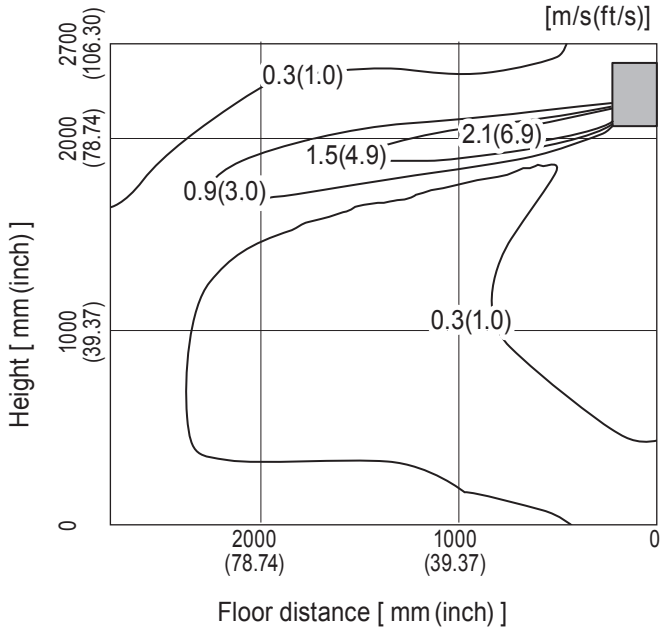

<Heating mode> Air volume: high
Air direction: auto (downward air flow)

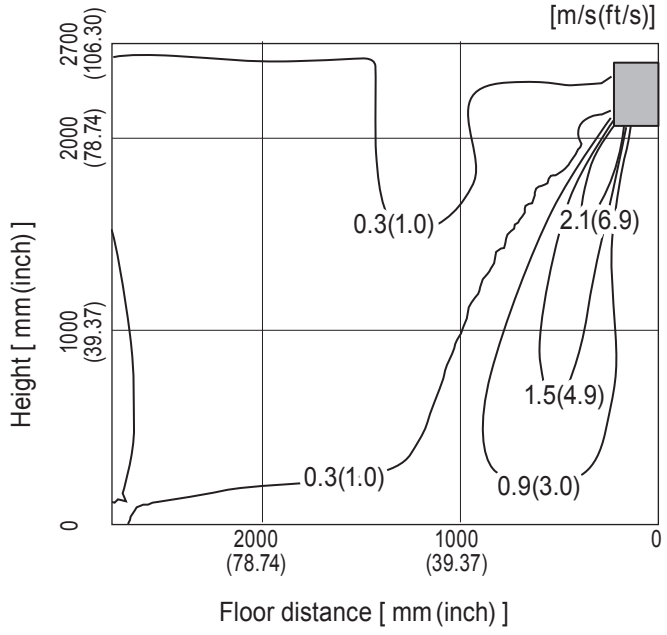

Note : These figures show typical airflow distributions in the conditions above. In the actual installation, they may differ from these figures under the influence of air temperature conditions, ceiling height, cooling/heating load,obstacles,etc.

MSZ-FH09NA

Temperature distribution

<Cooling mode> Air volume: high
Air direction: auto (upward air flow)

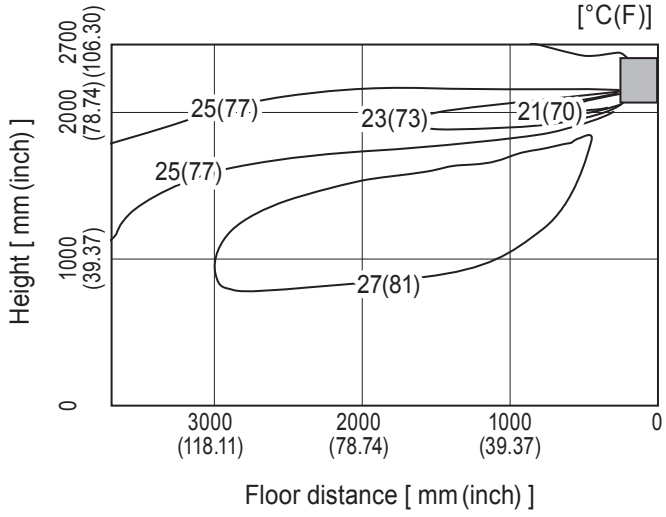

<Heating mode> Air volume: high
Air direction: auto (downward air flow)

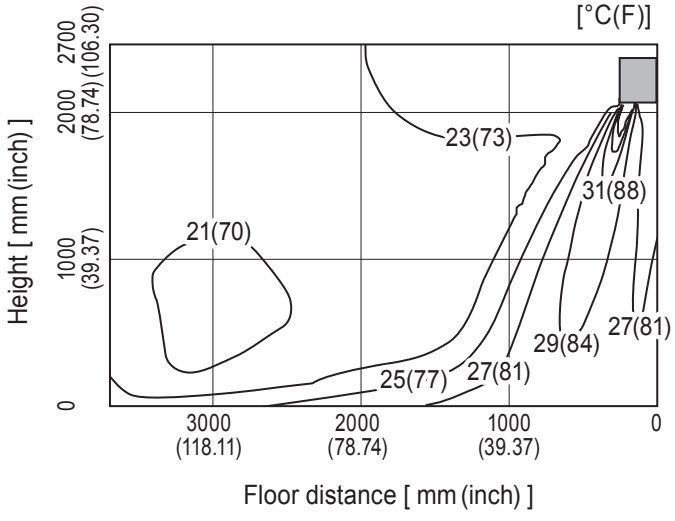

Note : These figures show typical airflow distributions in the conditions above. In the actual installation, they may differ from these figures under the influence of air temperature conditions, ceiling height, cooling/heating load,obstacles,etc.

MSZ-FH09NA

Airflow distribution

<Cooling mode> Air volume: high
Air direction: auto (upward air flow)

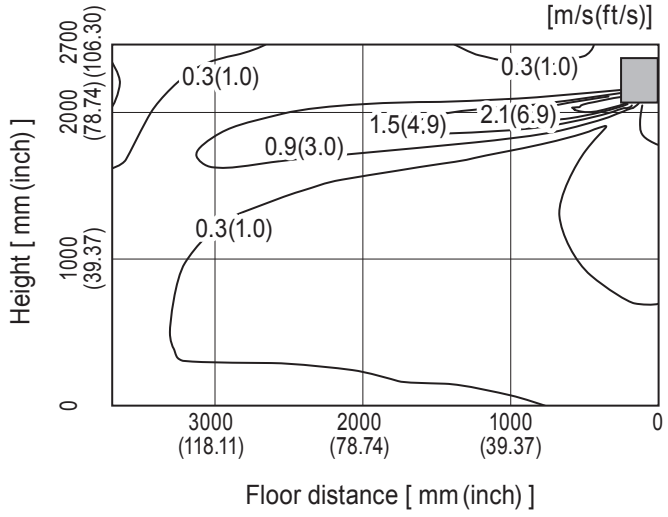

<Heating mode> Air volume: high
Air direction: auto (downward air flow)

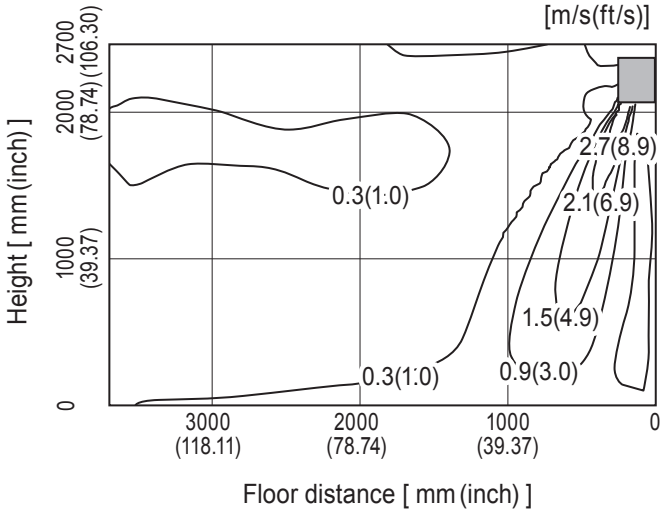

Note : These figures show typical airflow distributions in the conditions above. In the actual installation, they may differ from these figures under the influence of air temperature conditions, ceiling height, cooling/heating load,obstacles,etc.

MSZ-FH12NA

Temperature distribution

<Cooling mode> Air volume: high
Air direction: auto (upward air flow)

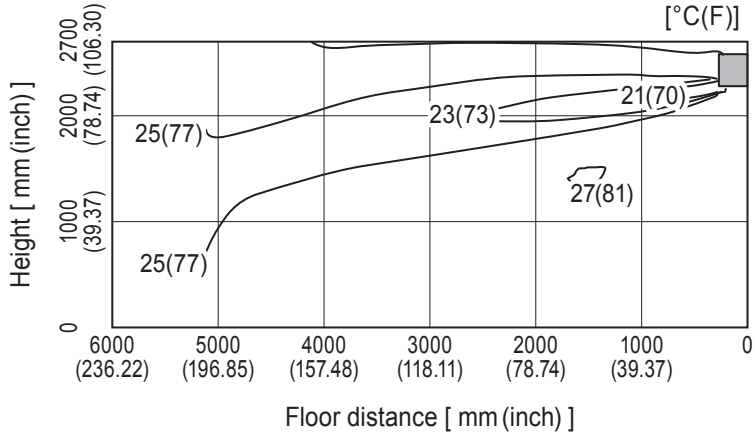

<Heating mode> Air volume: high
Air direction: auto (downward air flow)

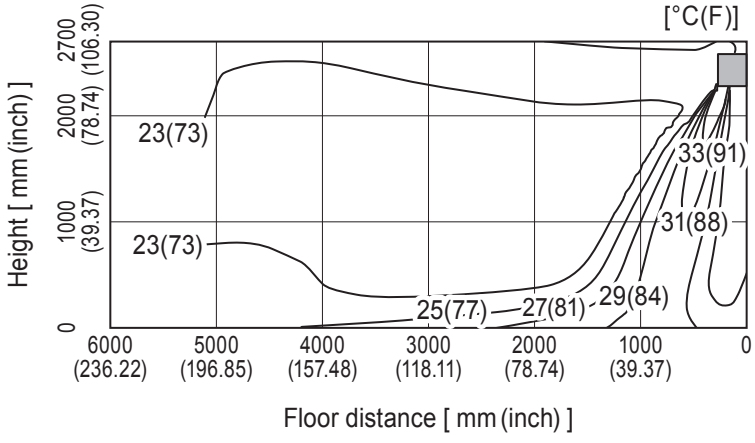

Note : These figures show typical airflow distributions in the conditions above. In the actual installation, they may differ from these figures under the influence of air temperature conditions, ceiling height, cooling/heating load,obstacles,etc.

MSZ-FH12NA

Airflow distribution

<Cooling mode>

Air volume: high
Air direction: auto (upward air flow)

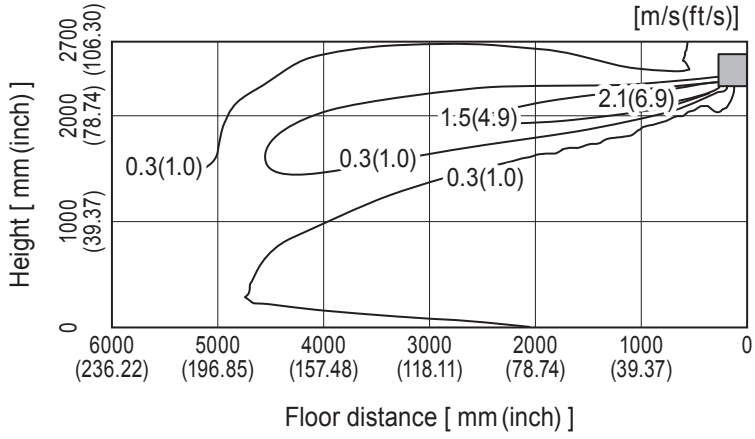

<Heating mode>

Air volume: high
Air direction: auto (downward air flow)

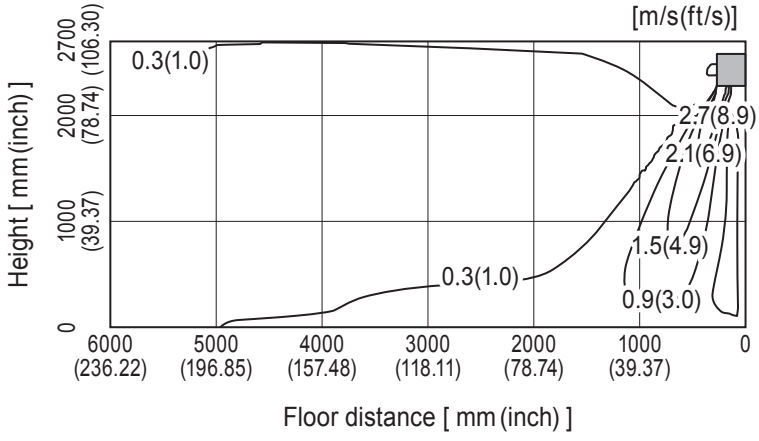

Note : These figures show typical airflow distributions in the conditions above. In the actual installation, they may differ from these figures under the influence of air temperature conditions, ceiling height, cooling/heating load,obstacles,etc.

MSZ-FH15NA

Temperature distribution

<Cooling mode> Air volume: high
Air direction: auto (upward air flow)

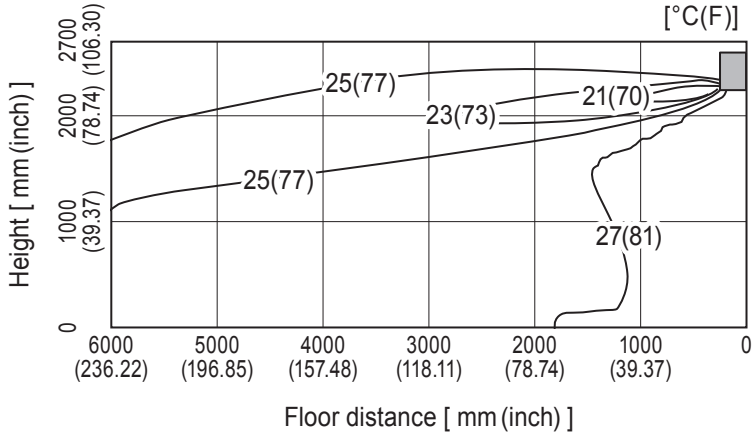

<Heating mode> Air volume: high
Air direction: auto (downward air flow)

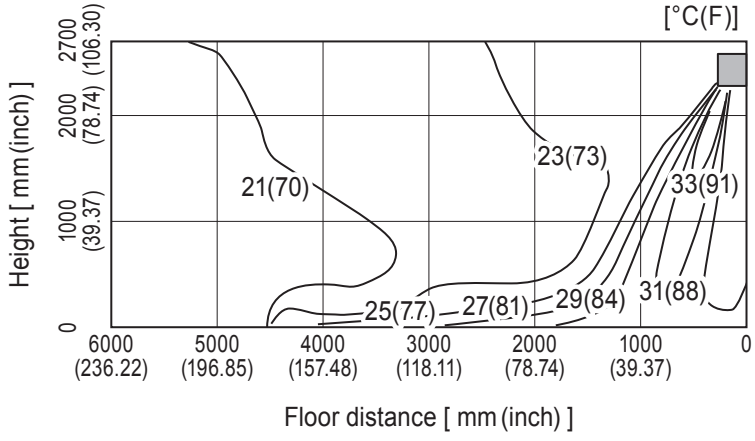

Note : These figures show typical airflow distributions in the conditions above. In the actual installation, they may differ from these figures under the influence of air temperature conditions, ceiling height, cooling/heating load,obstacles,etc.

MSZ-FH15NA

Airflow distribution

<Cooling mode>

Air volume: high
Air direction: auto (upward air flow)

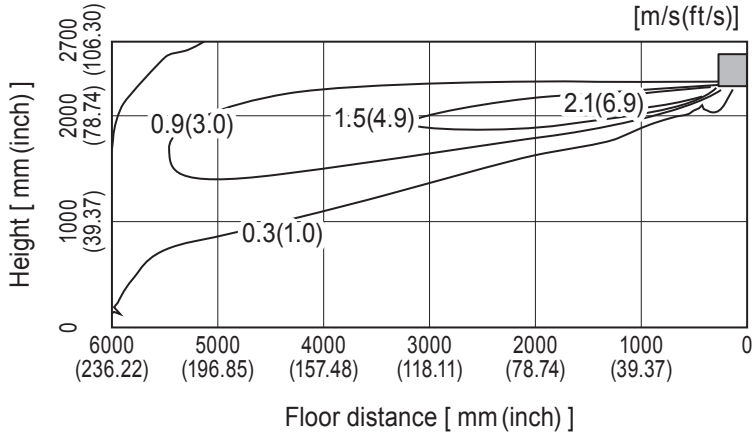

<Heating mode>

Air volume: high
Air direction: auto (downward air flow)

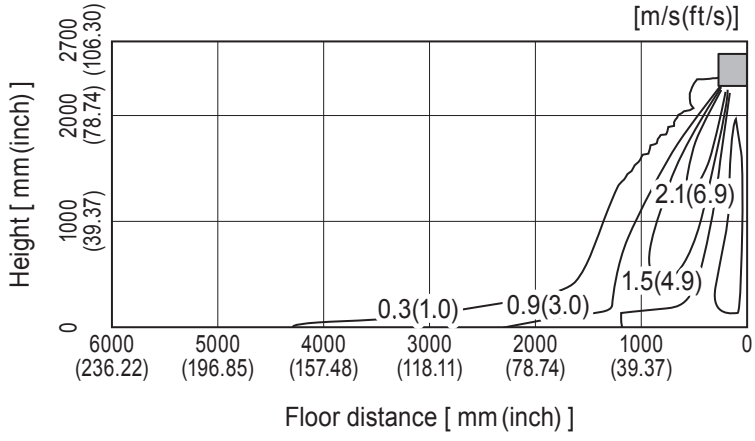

Note : These figures show typical airflow distributions in the conditions above. In the actual installation, they may differ from these figures under the influence of air temperature conditions, ceiling height, cooling/heating load,obstacles,etc.

MSZ-FH18NA2

Temperature distribution

<Cooling mode> Air volume: high
Air direction: auto (upward air flow)

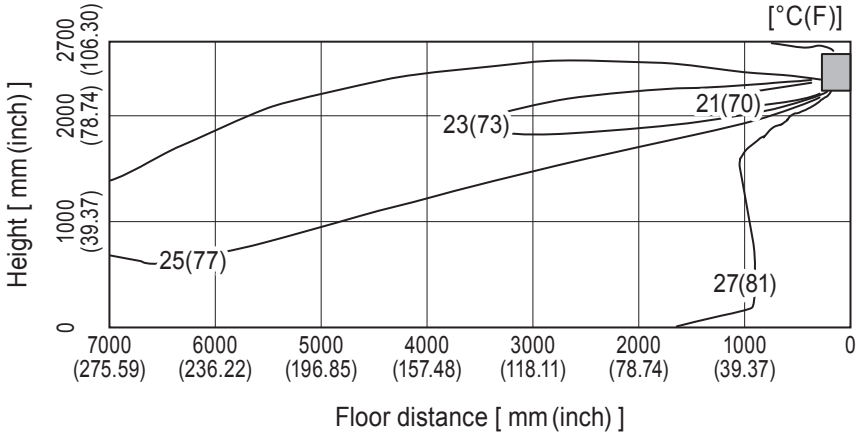

<Heating mode> Air volume: high
Air direction: auto (downward air flow)

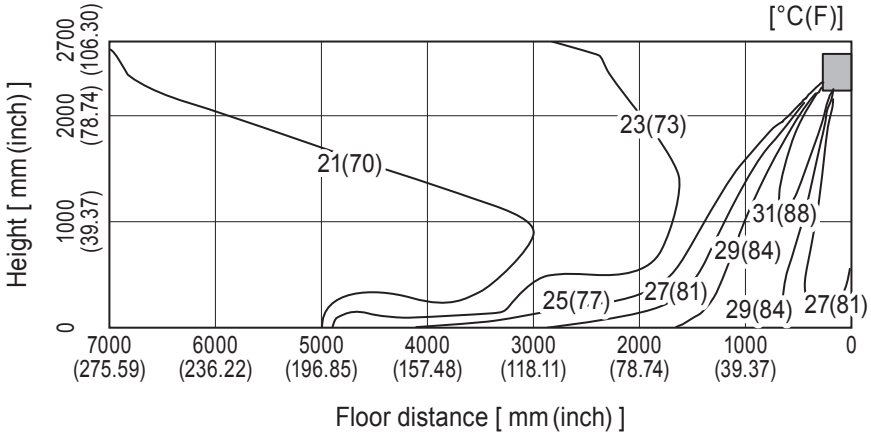

Note : These figures show typical airflow distributions in the conditions above. In the actual installation, they may differ from these figures under the influence of air temperature conditions, ceiling height, cooling/heating load,obstacles,etc.

MSZ-FH18NA2

Airflow distribution

<Cooling mode> Air volume: high
Air direction: auto (upward air flow)

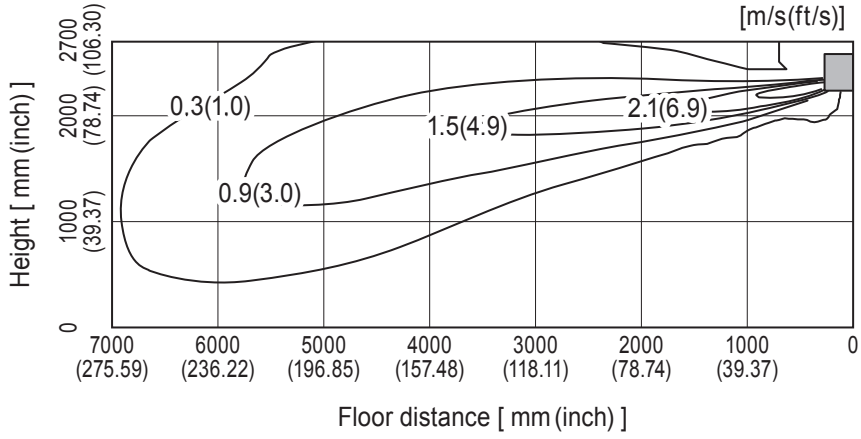

<Heating mode> Air volume: high
Air direction: auto (downward air flow)

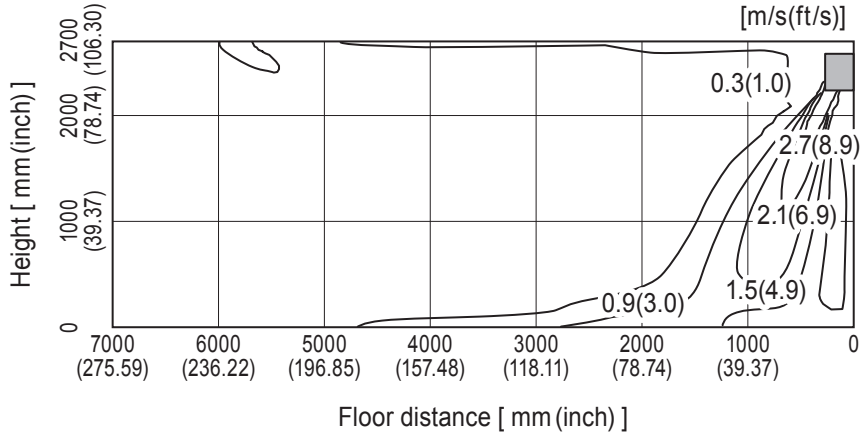

Note : These figures show typical airflow distributions in the conditions above. In the actual installation, they may differ from these figures under the influence of air temperature conditions, ceiling height, cooling/heating load,obstacles,etc.

MSZ-FE09NA

Temperature distribution

<Cooling mode> Air volume: high
Air direction: auto (upward air flow)

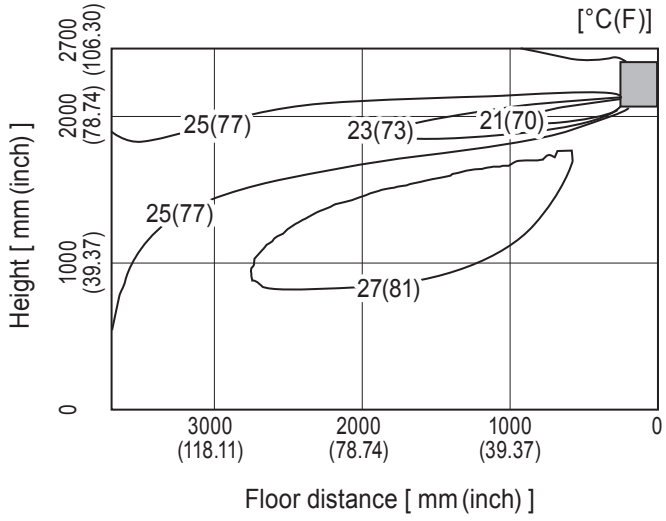

<Heating mode> Air volume: high
Air direction: auto (downward air flow)

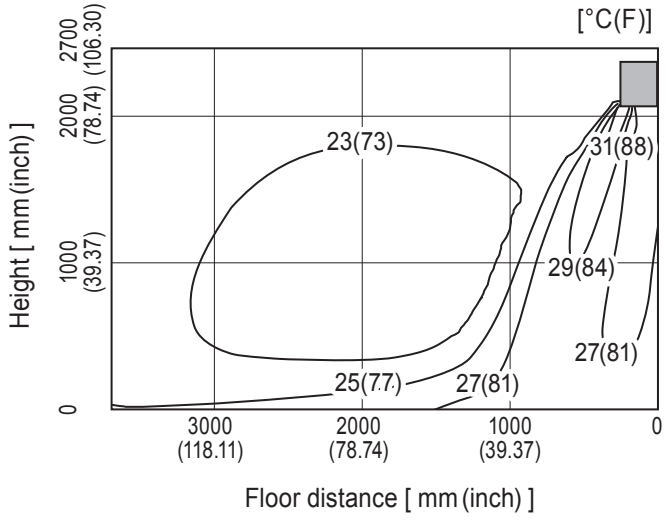

Note : These figures show typical airflow distributions in the conditions above. In the actual installation, they may differ from these figures under the influence of air temperature conditions, ceiling height, cooling/heating load,obstacles,etc.

MSZ-FE09NA

Airflow distribution

<Cooling mode> Air volume: high
Air direction: auto (upward air flow)

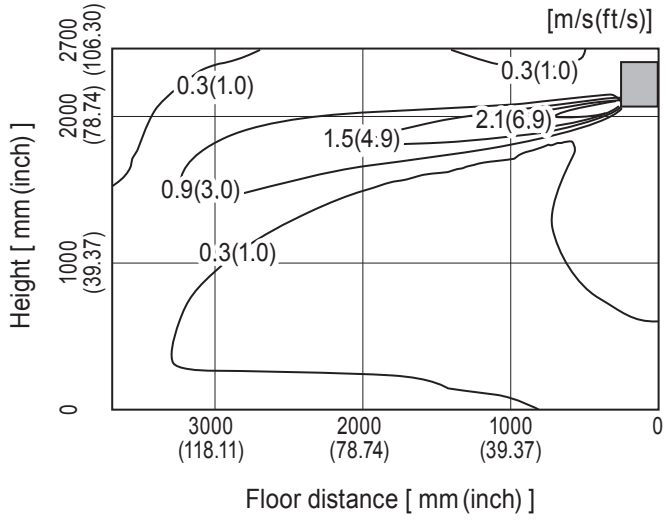

<Heating mode> Air volume: high
Air direction: auto (downward air flow)

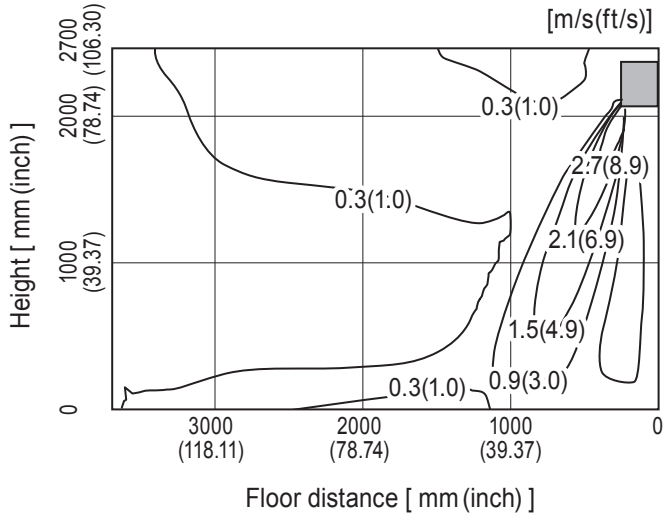

Note : These figures show typical airflow distributions in the conditions above. In the actual installation, they may differ from these figures under the influence of air temperature conditions, ceiling height, cooling/heating load,obstacles,etc.

MSZ-FE12NA

Temperature distribution

<Cooling mode> Air volume: high
Air direction: auto (upward air flow)

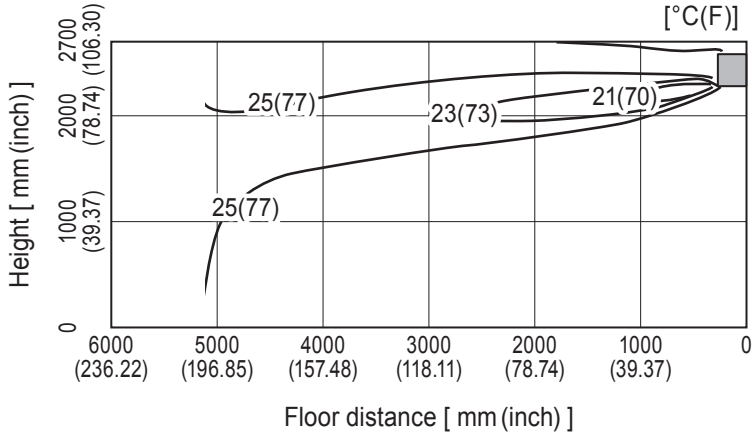

<Heating mode> Air volume: high
Air direction: auto (downward air flow)

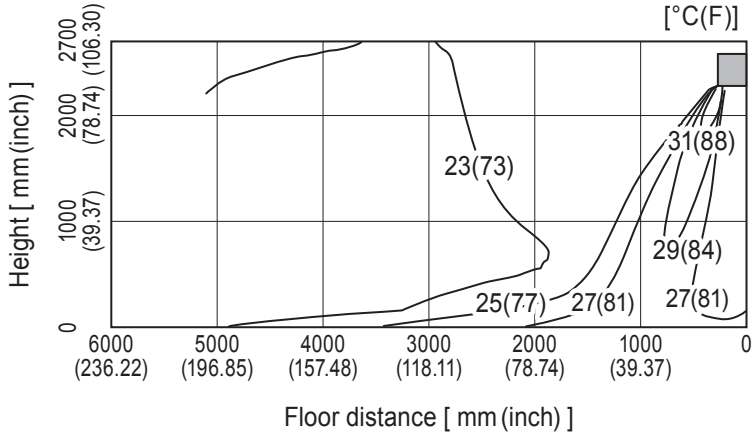

Note : These figures show typical airflow distributions in the conditions above. In the actual installation, they may differ from these figures under the influence of air temperature conditions, ceiling height, cooling/heating load,obstacles,etc.

MSZ-FE12NA

Airflow distribution

<Cooling mode>

Air volume: high
Air direction: auto (upward air flow)

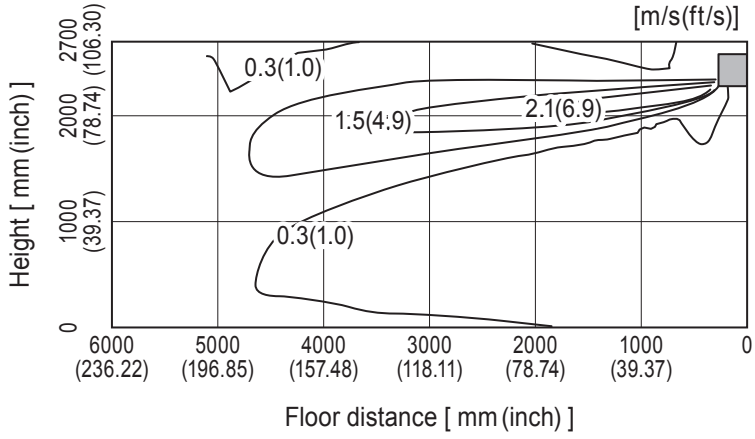

<Heating mode>

Air volume: high
Air direction: auto (downward air flow)

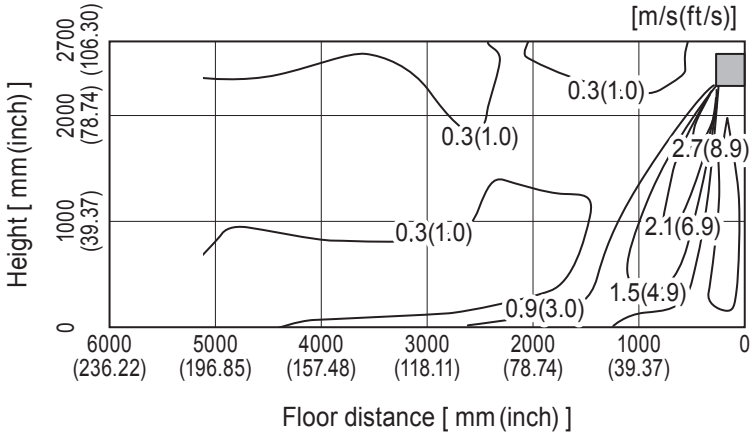

Note : These figures show typical airflow distributions in the conditions above. In the actual installation, they may differ from these figures under the influence of air temperature conditions, ceiling height, cooling/heating load,obstacles,etc.

MSZ-D30NA

Temperature distribution

<Cooling mode> Air volume: high
Air direction: auto (upward air flow)

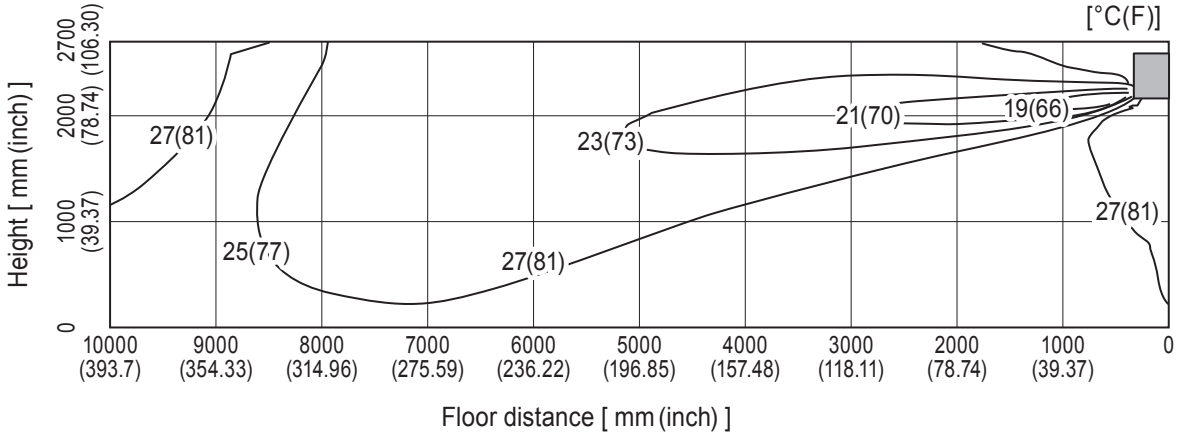

<Heating mode> Air volume: high
Air direction: auto (downward air flow)

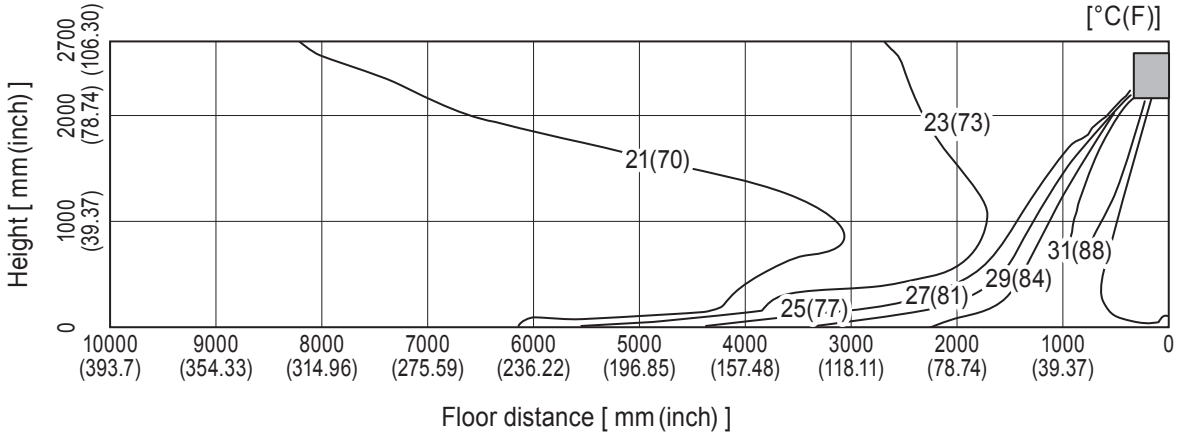

Note : These figures show typical airflow distributions in the conditions above. In the actual installation, they may differ from these figures under the influence of air temperature conditions, ceiling height, cooling/heating load,obstacles,etc.

MSZ-D30NA

Airflow distribution

<Cooling mode> Air volume: high
Air direction: auto (upward air flow)

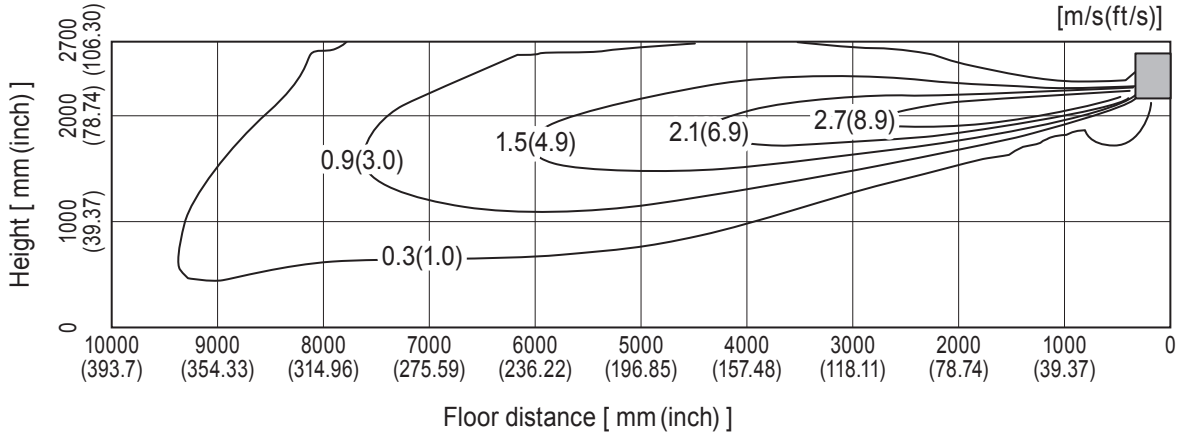

<Heating mode> Air volume: high
Air direction: auto (downward air flow)

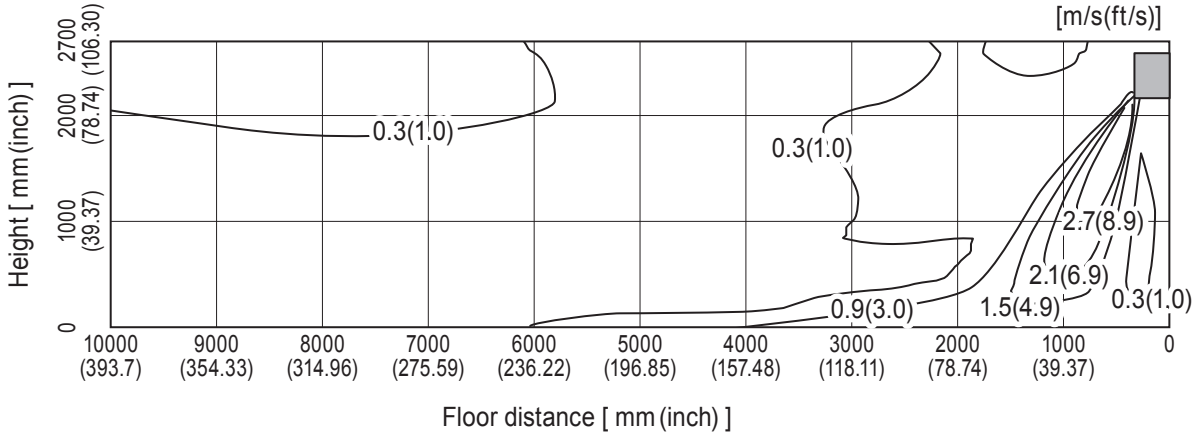

Note : These figures show typical airflow distributions in the conditions above. In the actual installation, they may differ from these figures under the influence of air temperature conditions, ceiling height, cooling/heating load,obstacles,etc.

MSZ-D36NA

Temperature distribution

<Cooling mode> Air volume: high
Air direction: auto (upward air flow)

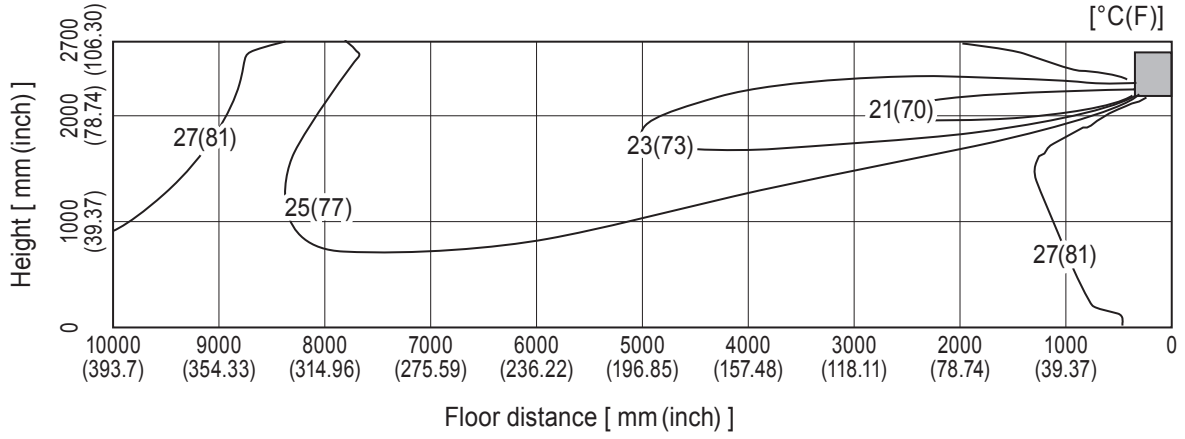

<Heating mode> Air volume: high
Air direction: auto (downward air flow)

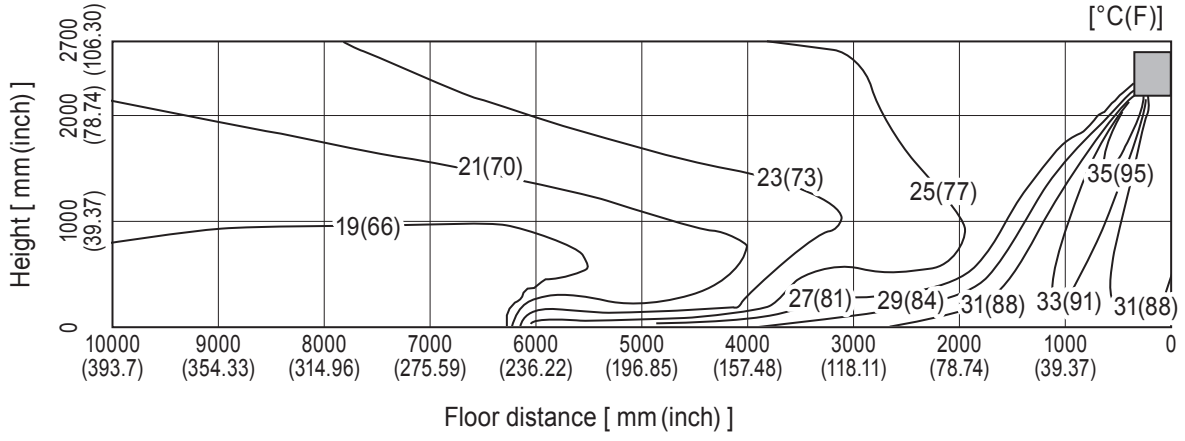

Note : These figures show typical airflow distributions in the conditions above. In the actual installation, they may differ from these figures under the influence of air temperature conditions, ceiling height, cooling/heating load,obstacles,etc.

MSZ-D36NA

Airflow distribution

<Cooling mode> Air volume: high
Air direction: auto (upward air flow)

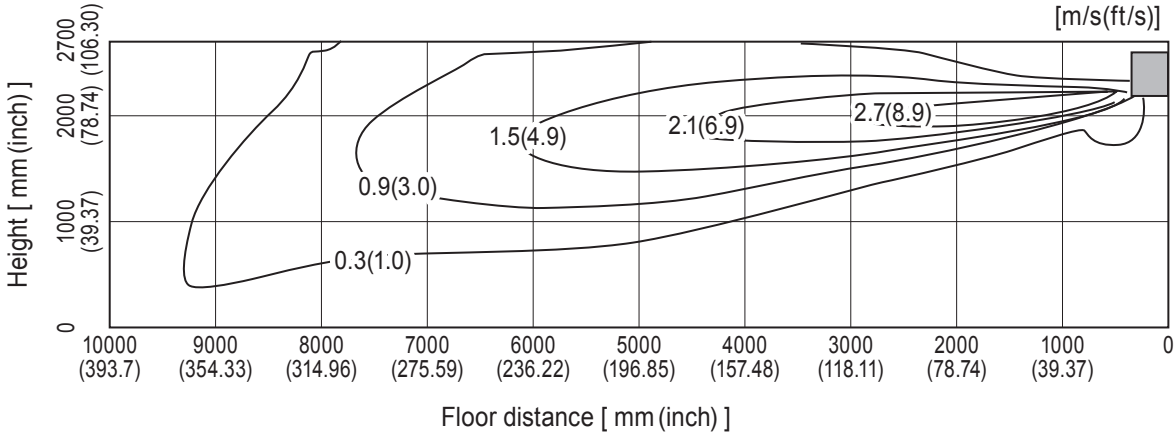

<Heating mode> Air volume: high
Air direction: auto (downward air flow)

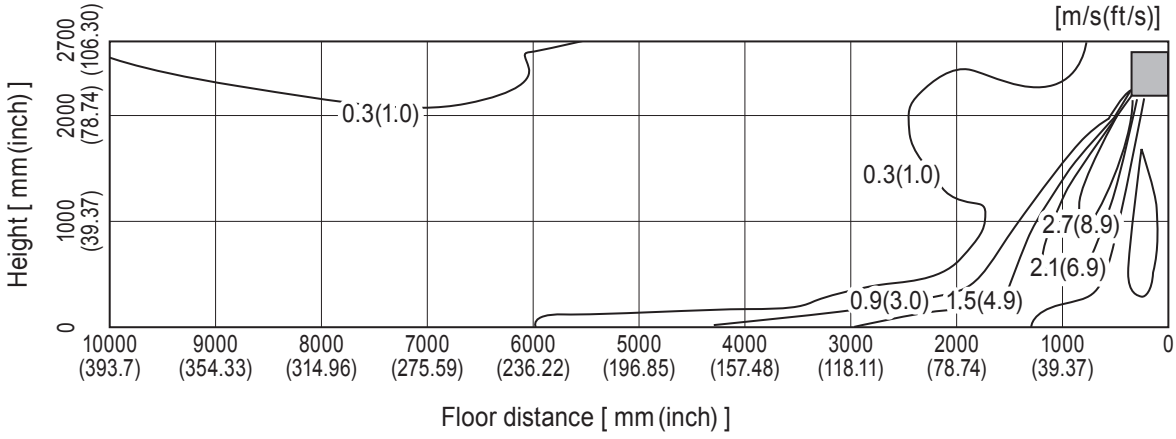

Note : These figures show typical airflow distributions in the conditions above. In the actual installation, they may differ from these figures under the influence of air temperature conditions, ceiling height, cooling/heating load,obstacles,etc.

MSY-D30NA

Temperature distribution

<Cooling mode> Air volume: high
Air direction: auto (upward air flow)

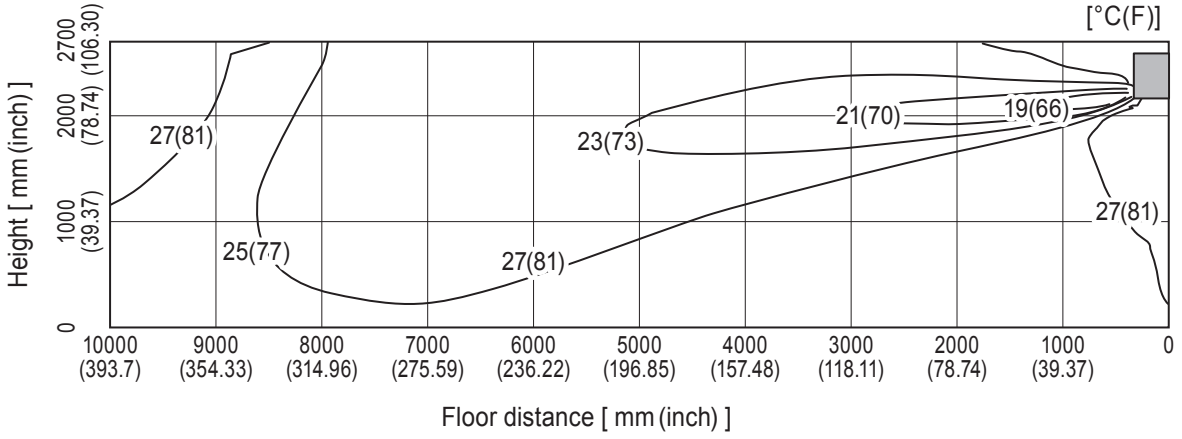

Airflow distribution

<Cooling mode> Air volume: high
Air direction: auto (upward air flow)

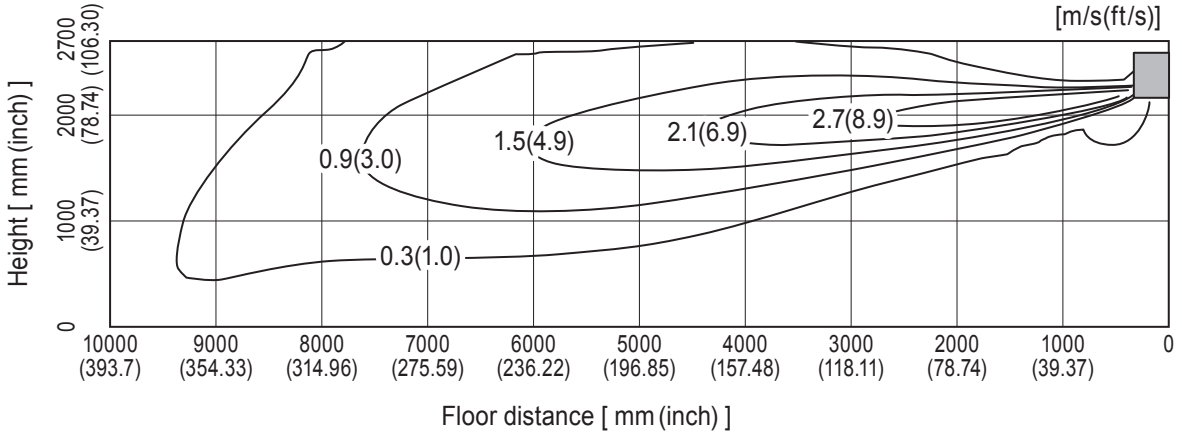

Note : These figures show typical airflow distributions in the conditions above. In the actual installation, they may differ from these figures under the influence of air temperature conditions, ceiling height, cooling/heating load,obstacles,etc.

MSY-D36NA

Temperature distribution

<Cooling mode> Air volume: high
Air direction: auto (upward air flow)

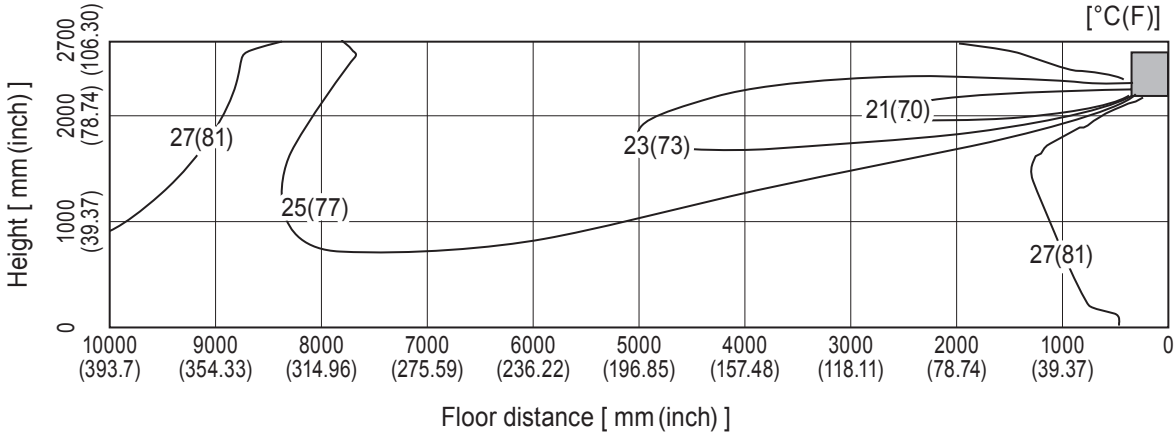

Airflow distribution

<Cooling mode> Air volume: high
Air direction: auto (upward air flow)

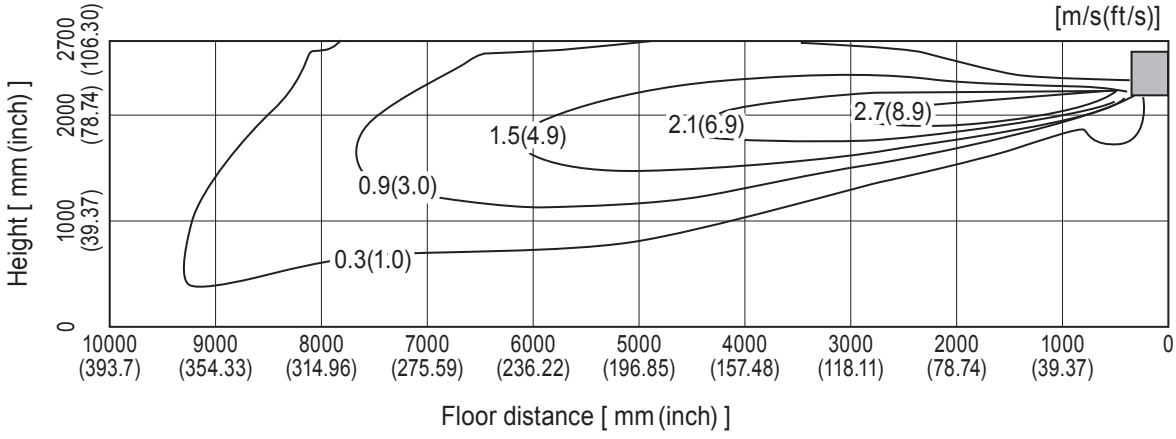

Note : These figures show typical airflow distributions in the conditions above. In the actual installation, they may differ from these figures under the influence of air temperature conditions, ceiling height, cooling/heating load,obstacles,etc.

SLZ-KA09NA

Temperature distribution

<Cooling mode> **Standard**

Flow angle: 30° 4-way flow
Ceiling height : 2.7m

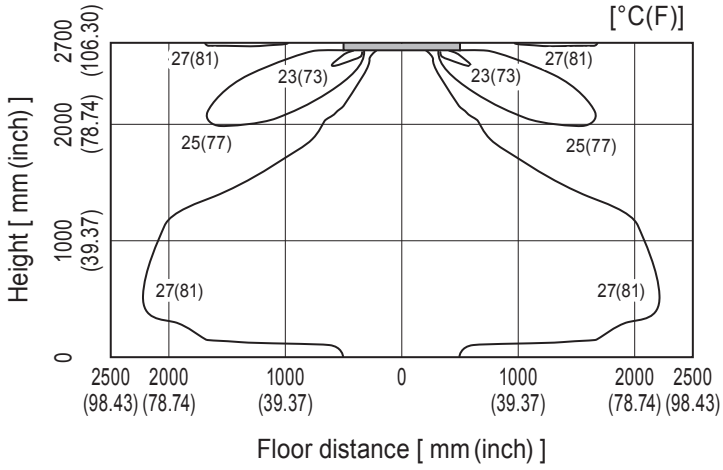

<Heating mode> **Standard**

Flow angle: 60° 4-way flow
Ceiling height : 2.7m

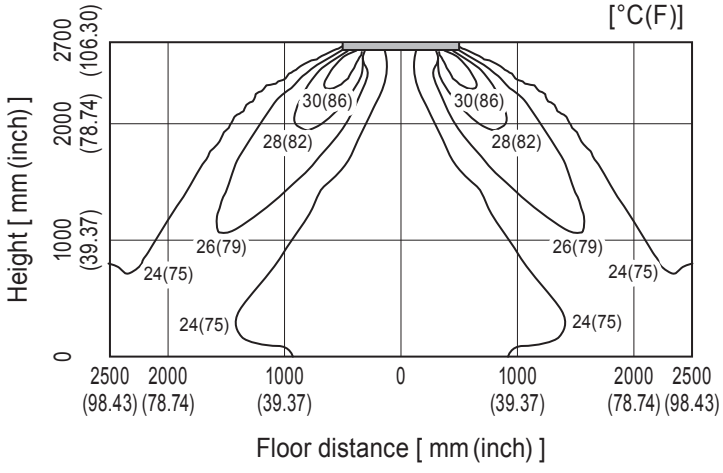

Note : These figures show typical airflow distributions in the conditions above. In the actual installation, they may differ from these figures under the influence of air temperature conditions, ceiling height, cooling/heating load,obstacles,etc.

SLZ-KA09NA

Airflow distribution

<Cooling mode> **Standard**

Flow angle: 30° 4-way flow
Ceiling height : 2.7m

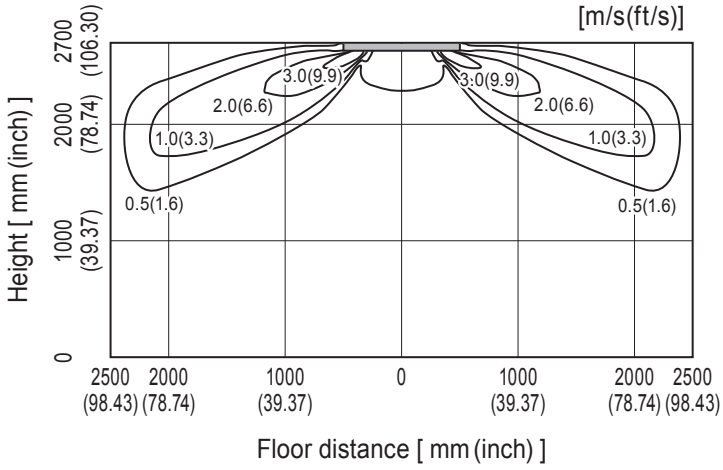

<Heating mode> **Standard**

Flow angle: 60° 4-way flow
Ceiling height : 2.7m

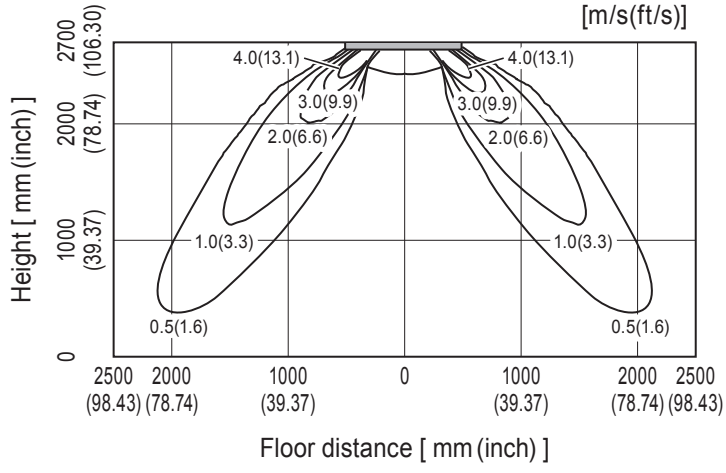

Note : These figures show typical airflow distributions in the conditions above. In the actual installation, they may differ from these figures under the influence of air temperature conditions, ceiling height, cooling/heating load,obstacles,etc.

SLZ-KA12NA

Temperature distribution

<Cooling mode> **Standard**

Flow angle: 30° 4-way flow
Ceiling height : 2.7m

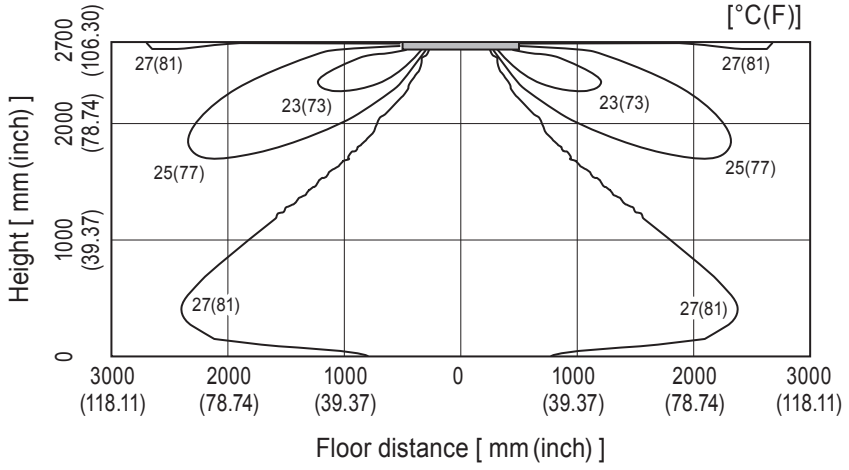

<Heating mode> **Standard**

Flow angle: 60° 4-way flow
Ceiling height : 2.7m

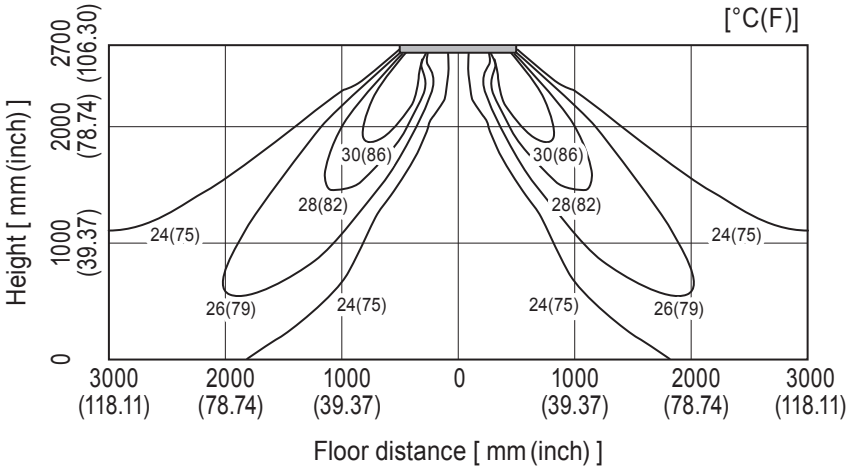

Note : These figures show typical airflow distributions in the conditions above. In the actual installation, they may differ from these figures under the influence of air temperature conditions, ceiling height, cooling/heating load,obstacles,etc.

SLZ-KA12NA

Airflow distribution

<Cooling mode> **Standard**

Flow angle: 30° 4-way flow
Ceiling height : 2.7m

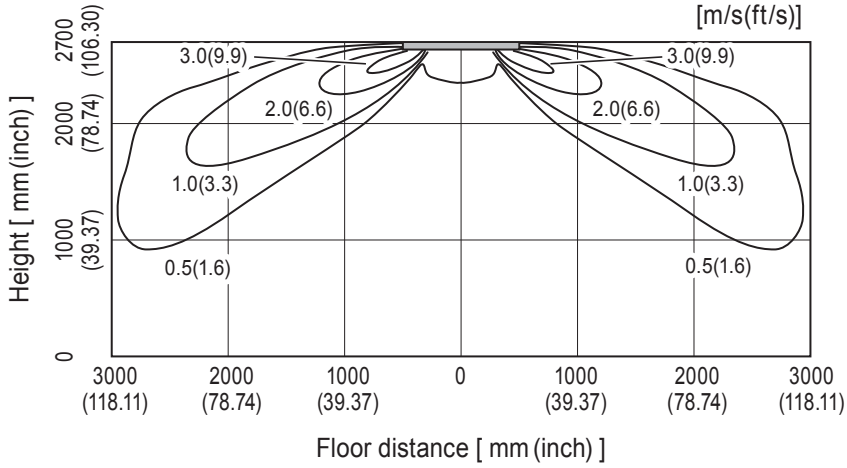

<Heating mode> **Standard**

Flow angle: 60° 4-way flow
Ceiling height : 2.7m

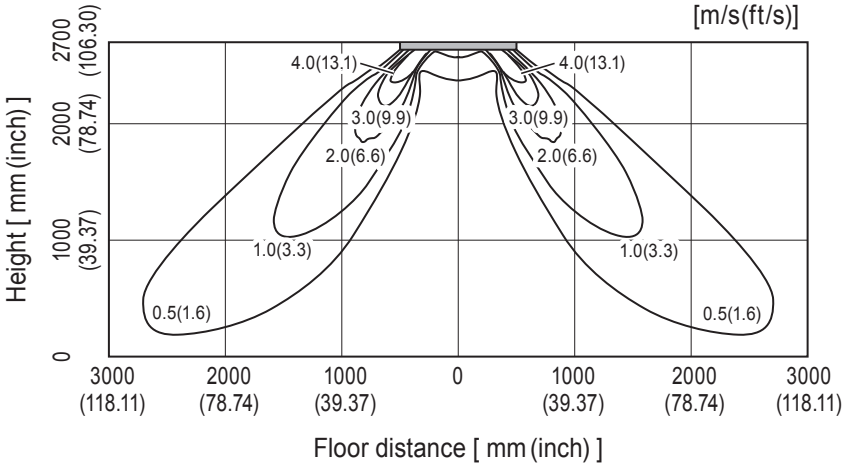

Note : These figures show typical airflow distributions in the conditions above. In the actual installation, they may differ from these figures under the influence of air temperature conditions, ceiling height, cooling/heating load,obstacles,etc.

SLZ-KA15NA

Temperature distribution

<Cooling mode> **Standard**

Flow angle: 30° 4-way flow
Ceiling height : 2.7m

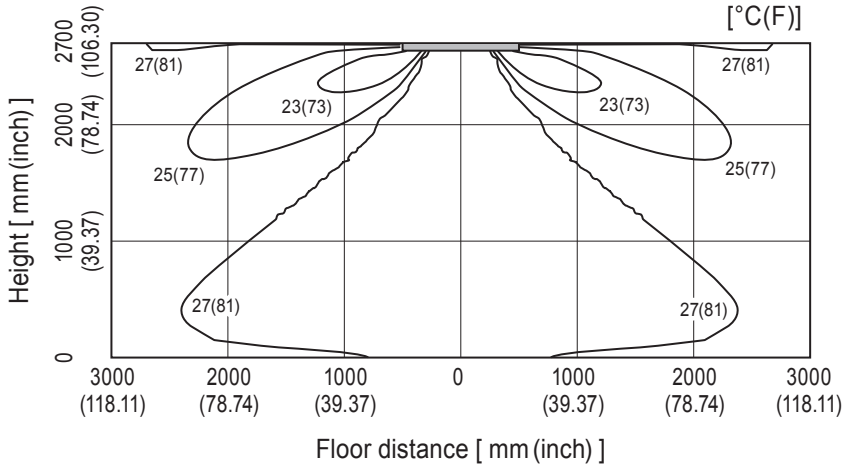

<Heating mode> **Standard**

Flow angle: 60° 4-way flow
Ceiling height : 2.7m

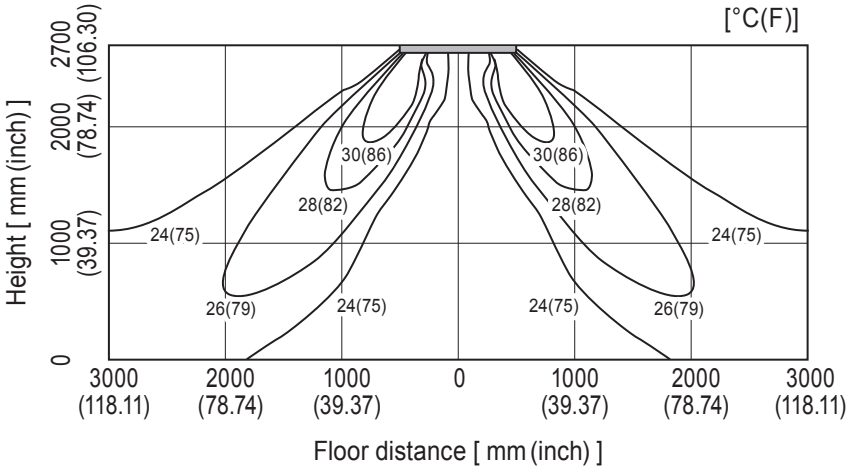

Note : These figures show typical airflow distributions in the conditions above. In the actual installation, they may differ from these figures under the influence of air temperature conditions, ceiling height, cooling/heating load,obstacles,etc.

SLZ-KA15NA

Airflow distribution

<Cooling mode> **Standard**

Flow angle: 30° 4-way flow
Ceiling height : 2.7m

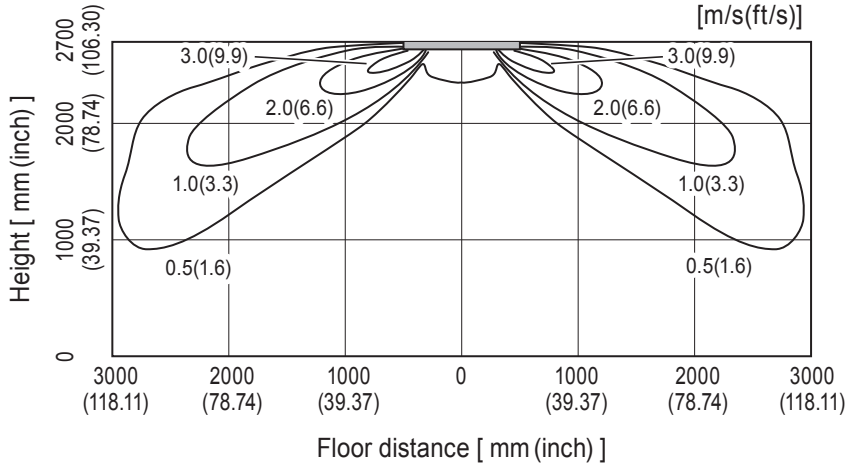

<Heating mode> **Standard**

Flow angle: 60° 4-way flow
Ceiling height : 2.7m

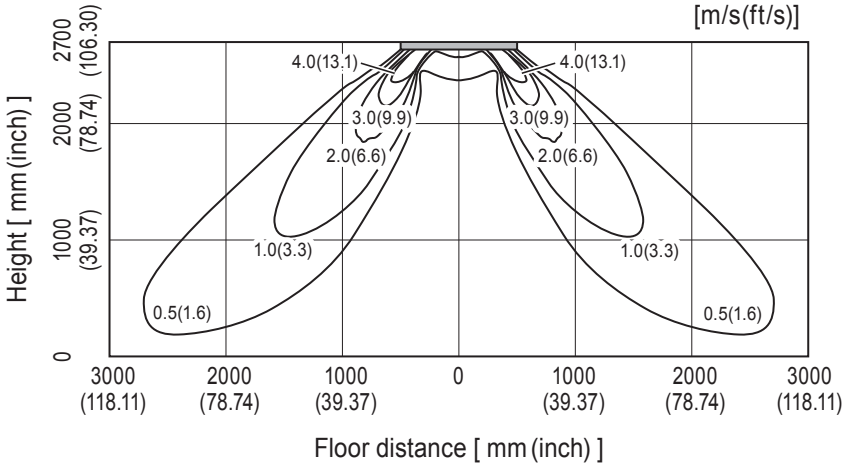

Note : These figures show typical airflow distributions in the conditions above. In the actual installation, they may differ from these figures under the influence of air temperature conditions, ceiling height, cooling/heating load,obstacles,etc.

MFZ-KJ09NA Single connection

Standard installation (One-direction air flow)

Temperature distribution

<Cooling mode> Air volume: super high
Air direction: auto (upward air flow)

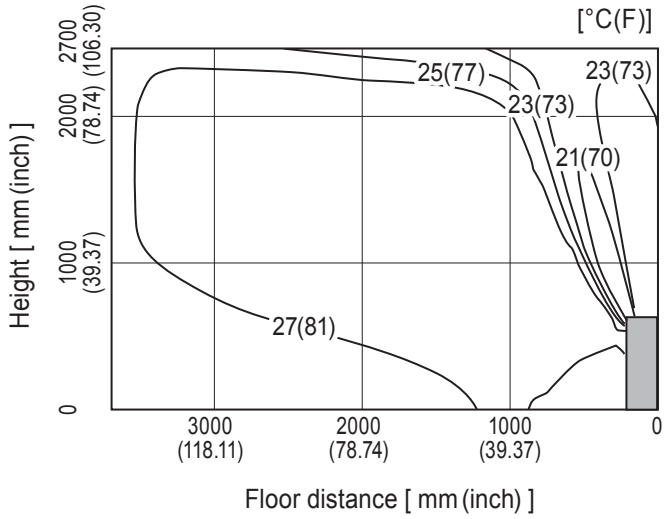

<Heating mode> Air volume: super high
Air direction: auto (downward air flow)

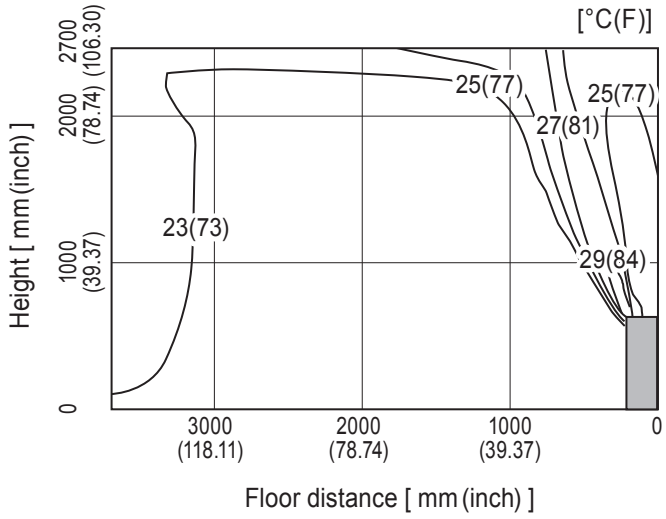

Note : These figures show typical airflow distributions in the conditions above. In the actual installation, they may differ from these figures under the influence of air temperature conditions, ceiling height, cooling/heating load,obstacles,etc.

MFZ-KJ09NA Single connection

Standard installation (One-direction air flow)

Airflow distribution

<Cooling mode> Air volume: super high
Air direction: auto (upward air flow)

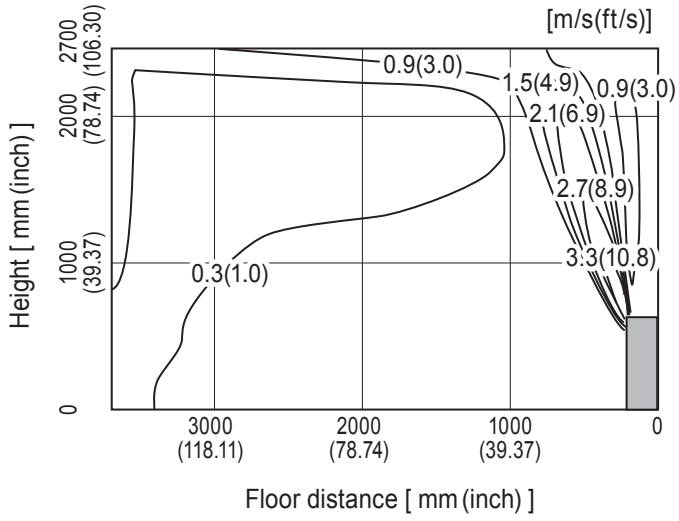

<Heating mode> Air volume: super high
Air direction: auto (downward air flow)

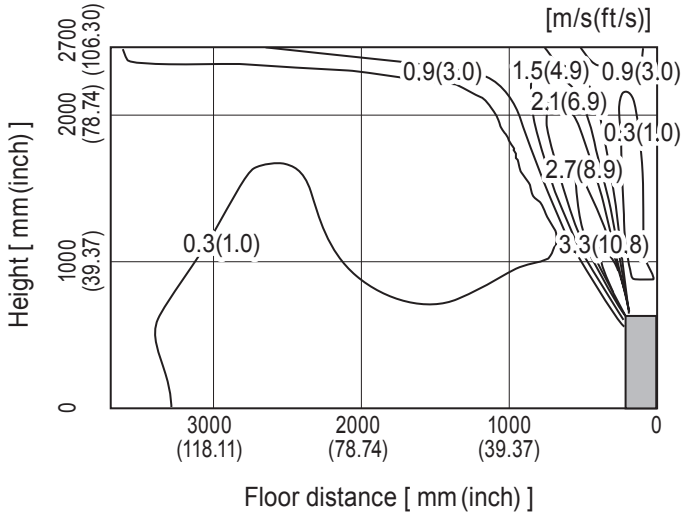

Note : These figures show typical airflow distributions in the conditions above. In the actual installation, they may differ from these figures under the influence of air temperature conditions, ceiling height, cooling/heating load,obstacles,etc.

MFZ-KJ09NA Single connection

Standard installation (Two-direction air flow)

Temperature distribution

<Cooling mode> Air volume: super high
Air direction: auto (upward air flow)

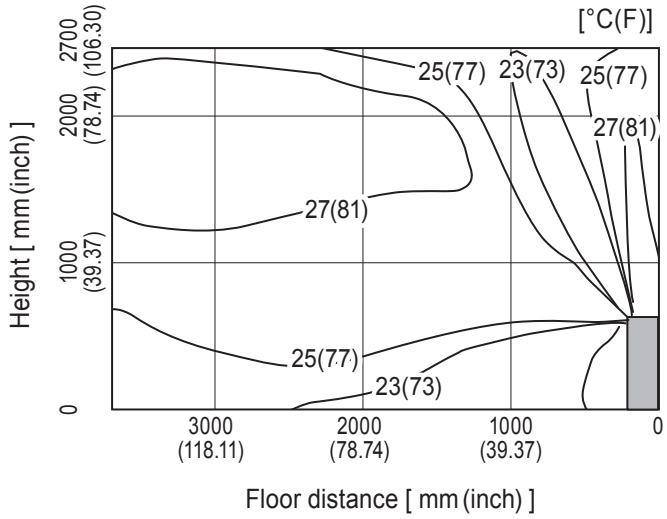

<Heating mode> Air volume: super high
Air direction: auto (downward air flow)

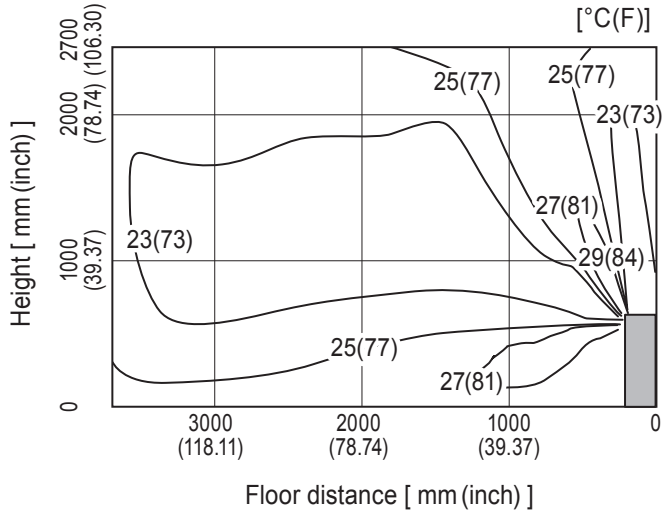

Note : These figures show typical airflow distributions in the conditions above. In the actual installation, they may differ from these figures under the influence of air temperature conditions, ceiling height, cooling/heating load,obstacles,etc.

MFZ-KJ09NA Single connection

Standard installation (Two-direction air flow)

Airflow distribution

<Cooling mode> Air volume: super high
Air direction: auto (upward air flow)

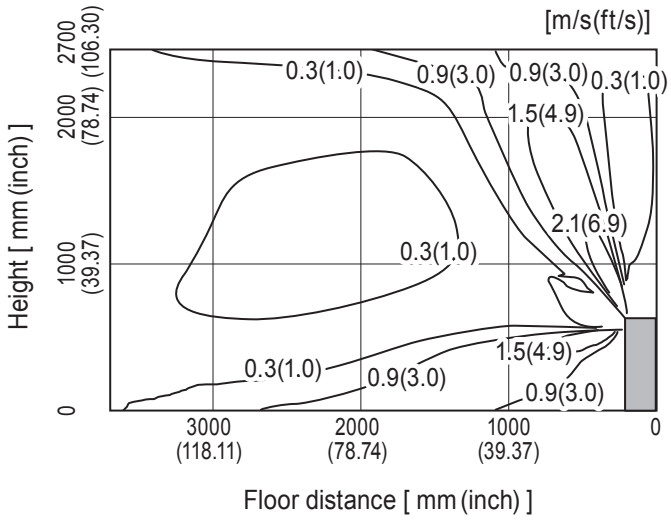

<Heating mode> Air volume: super high
Air direction: auto (downward air flow)

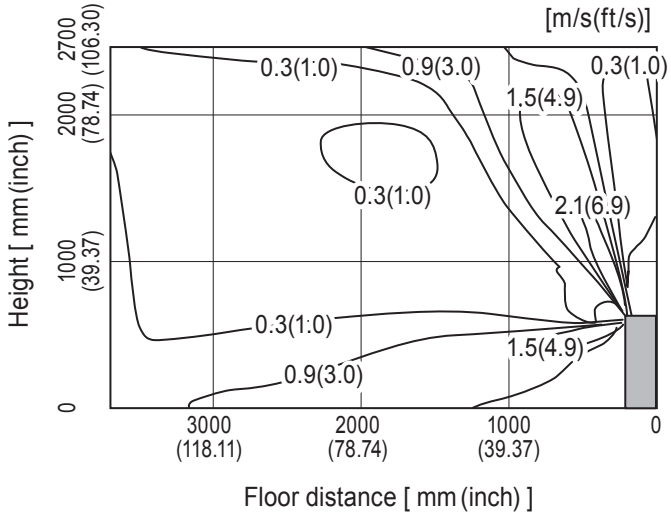

Note : These figures show typical airflow distributions in the conditions above. In the actual installation, they may differ from these figures under the influence of air temperature conditions, ceiling height, cooling/heating load,obstacles,etc.

MFZ-KJ12NA Single connection

Standard installation (One-direction air flow)

Temperature distribution

<Cooling mode> Air volume: super high
Air direction: auto (upward air flow)

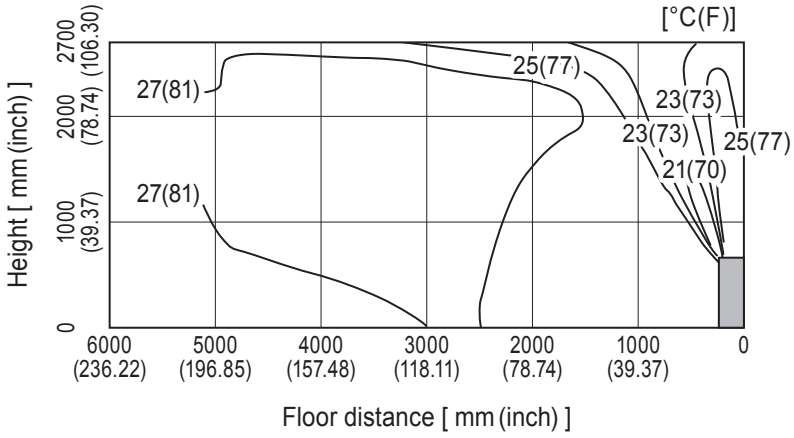

<Heating mode> Air volume: super high
Air direction: auto (downward air flow)

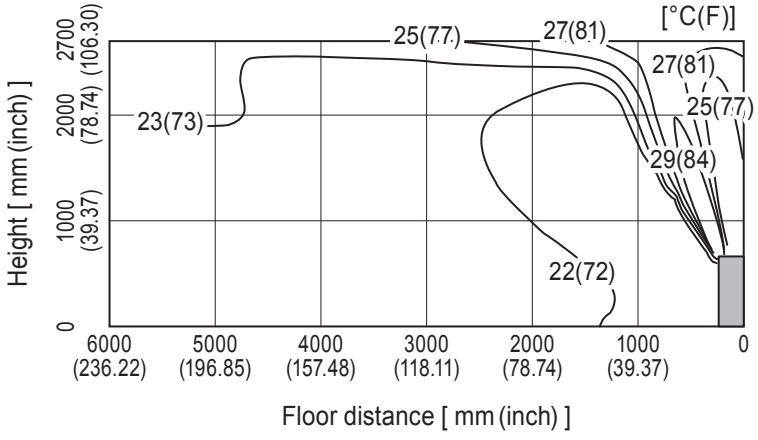

Note : These figures show typical airflow distributions in the conditions above. In the actual installation, they may differ from these figures under the influence of air temperature conditions, ceiling height, cooling/heating load,obstacles,etc.

MFZ-KJ12NA Single connection

Standard installation (One-direction air flow)

Airflow distribution

<Cooling mode> Air volume: super high
Air direction: auto (upward air flow)

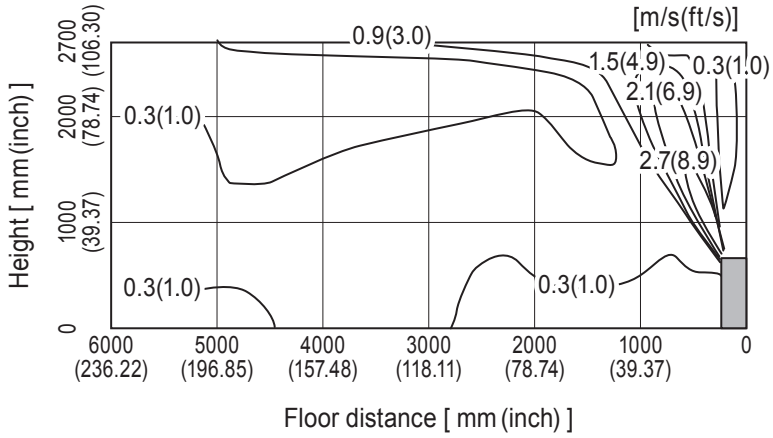

<Heating mode> Air volume: super high
Air direction: auto (downward air flow)

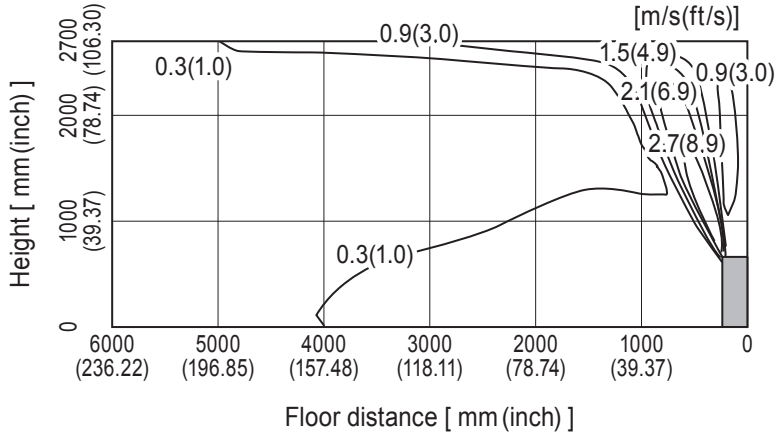

Note : These figures show typical airflow distributions in the conditions above. In the actual installation, they may differ from these figures under the influence of air temperature conditions, ceiling height, cooling/heating load,obstacles,etc.

MFZ-KJ12NA Single connection

Standard installation (Two-direction air flow)

Temperature distribution

<Cooling mode> Air volume: super high
Air direction: auto (upward air flow)

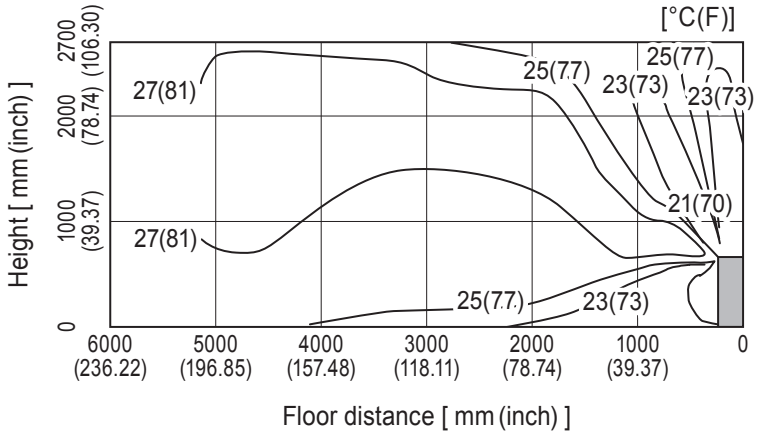

<Heating mode> Air volume: super high
Air direction: auto (downward air flow)

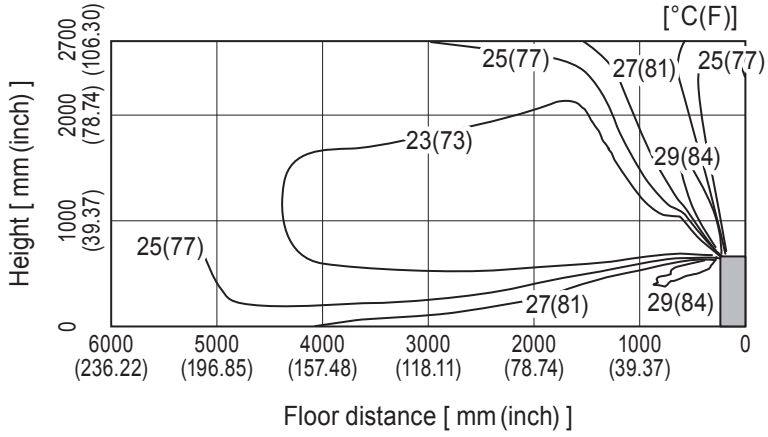

Note : These figures show typical airflow distributions in the conditions above. In the actual installation, they may differ from these figures under the influence of air temperature conditions, ceiling height, cooling/heating load,obstacles,etc.

MFZ-KJ12NA Single connection

Standard installation (Two-direction air flow)

Airflow distribution

<Cooling mode> Air volume: super high
Air direction: auto (upward air flow)

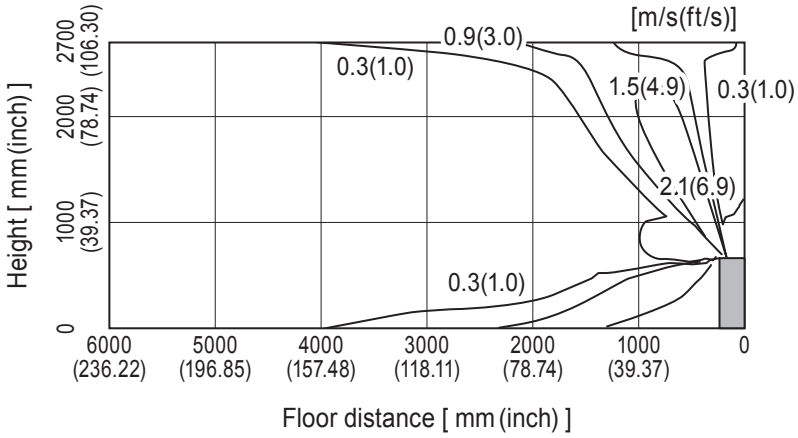

<Heating mode> Air volume: super high
Air direction: auto (downward air flow)

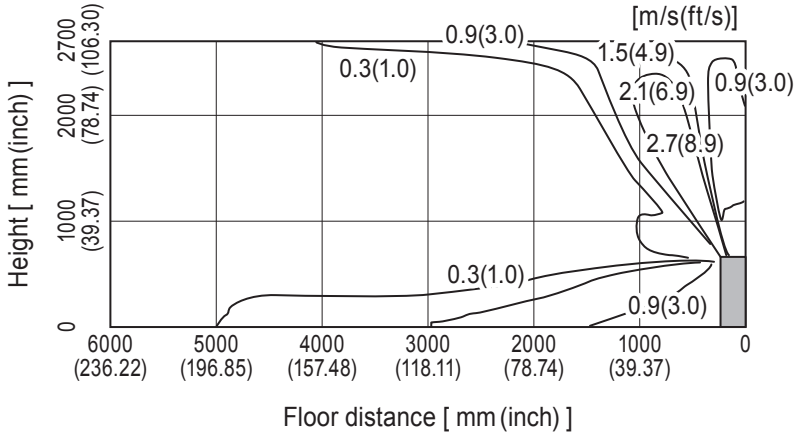

Note : These figures show typical airflow distributions in the conditions above. In the actual installation, they may differ from these figures under the influence of air temperature conditions, ceiling height, cooling/heating load,obstacles,etc.

MFZ-KJ15NA Single connection

Standard installation (One-direction air flow)

Temperature distribution

<Cooling mode> Air volume: super high
Air direction: auto (upward air flow)

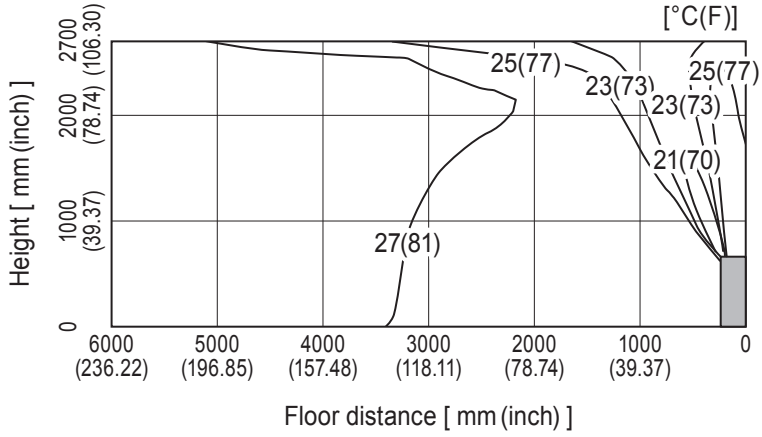

<Heating mode> Air volume: super high
Air direction: auto (downward air flow)

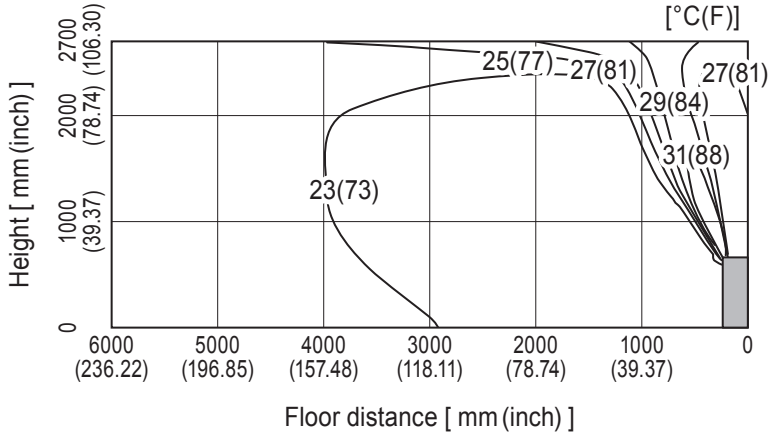

Note : These figures show typical airflow distributions in the conditions above. In the actual installation, they may differ from these figures under the influence of air temperature conditions, ceiling height, cooling/heating load,obstacles,etc.

MFZ-KJ15NA Single connection

Standard installation (One-direction air flow)

Airflow distribution

<Cooling mode> Air volume: super high
Air direction: auto (upward air flow)

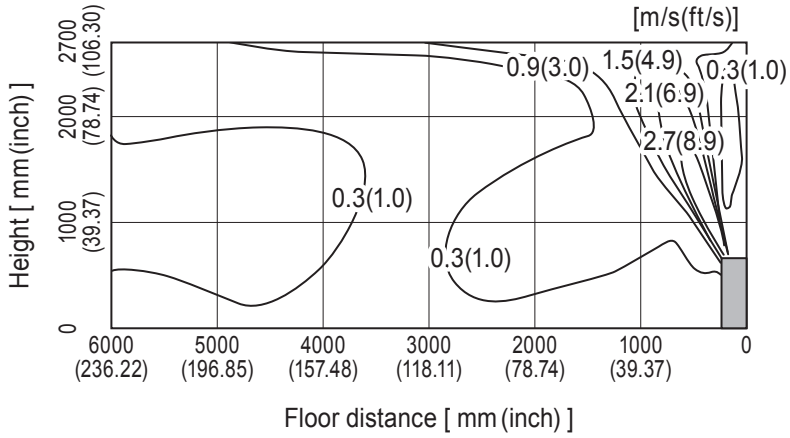

<Heating mode> Air volume: super high
Air direction: auto (downward air flow)

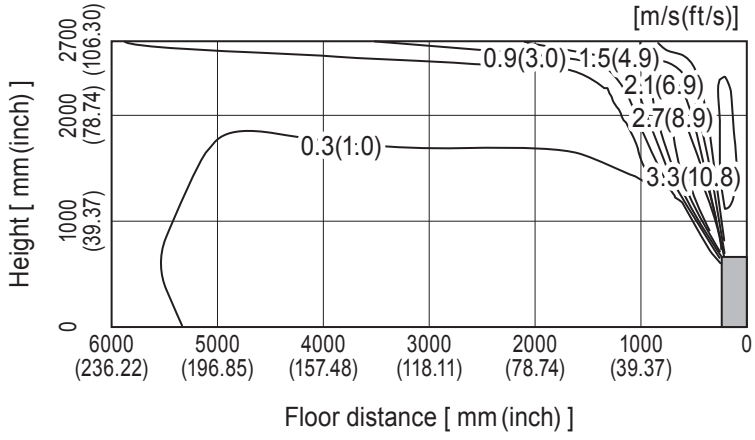

Note : These figures show typical airflow distributions in the conditions above. In the actual installation, they may differ from these figures under the influence of air temperature conditions, ceiling height, cooling/heating load,obstacles,etc.

MFZ-KJ15NA Single connection

Standard installation (Two-direction air flow)

Temperature distribution

<Cooling mode> Air volume: super high
Air direction: auto (upward air flow)

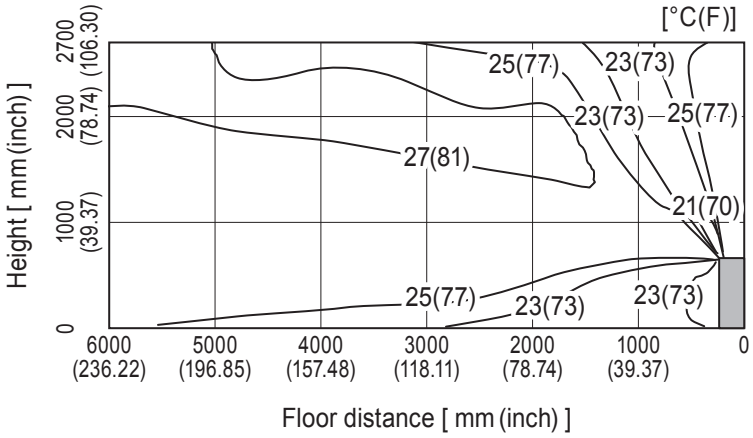

<Heating mode> Air volume: super high
Air direction: auto (downward air flow)

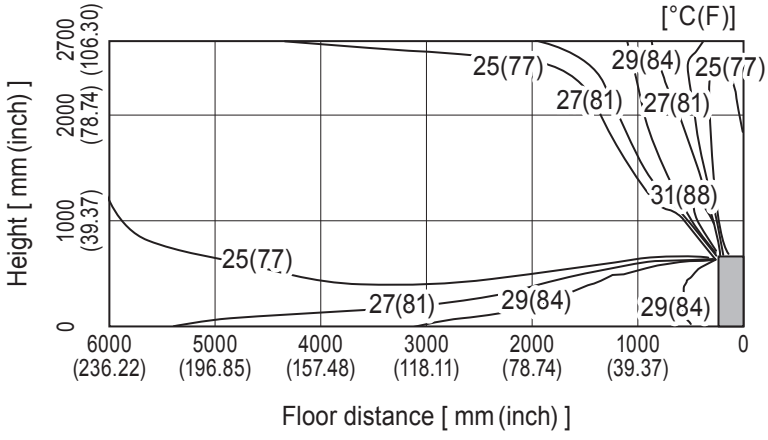

Note : These figures show typical airflow distributions in the conditions above. In the actual installation, they may differ from these figures under the influence of air temperature conditions, ceiling height, cooling/heating load,obstacles,etc.

MFZ-KJ15NA Single connection

Standard installation (Two-direction air flow)

Airflow distribution

<Cooling mode>

Air volume: super high
Air direction: auto (upward air flow)

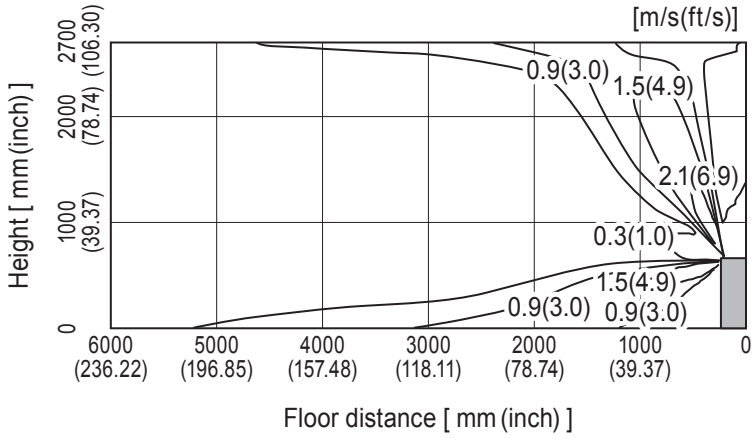

<Heating mode>

Air volume: super high
Air direction: auto (downward air flow)

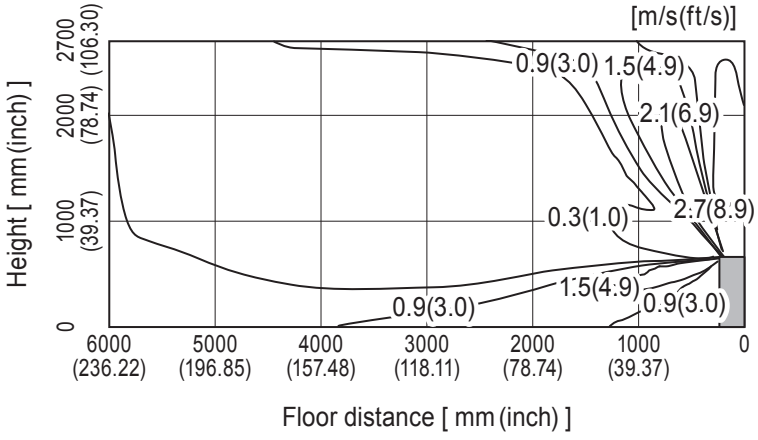

Note : These figures show typical airflow distributions in the conditions above. In the actual installation, they may differ from these figures under the influence of air temperature conditions, ceiling height, cooling/heating load,obstacles,etc.

MFZ-KJ18NA Single connection

Standard installation (One-direction air flow)

Temperature distribution

<Cooling mode> Air volume: super high
Air direction: auto (upward air flow)

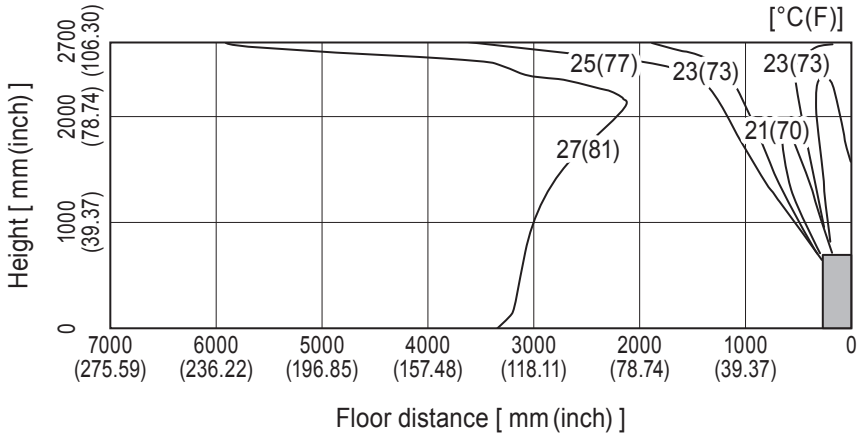

<Heating mode> Air volume: super high
Air direction: auto (downward air flow)

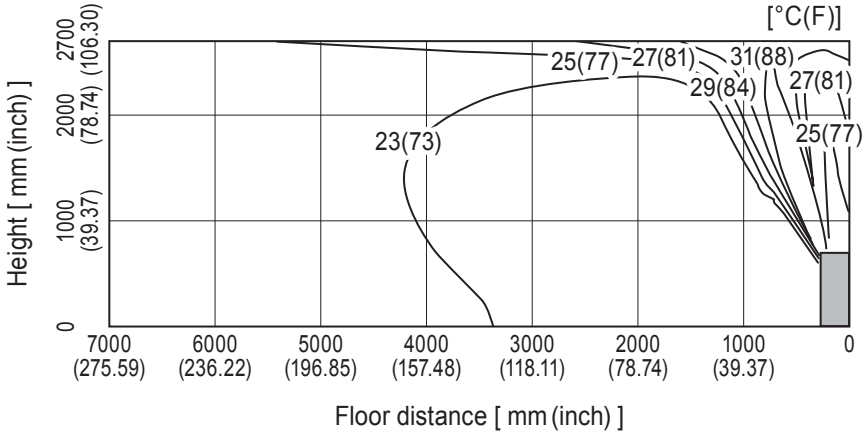

Note : These figures show typical airflow distributions in the conditions above. In the actual installation, they may differ from these figures under the influence of air temperature conditions, ceiling height, cooling/heating load,obstacles,etc.

MFZ-KJ18NA Single connection

Standard installation (One-direction air flow)

Airflow distribution

<Cooling mode> Air volume: super high
Air direction: auto (upward air flow)

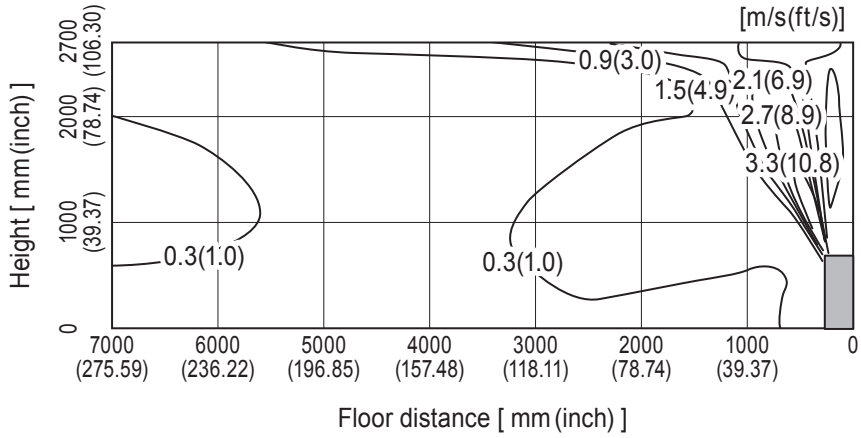

<Heating mode> Air volume: super high
Air direction: auto (downward air flow)

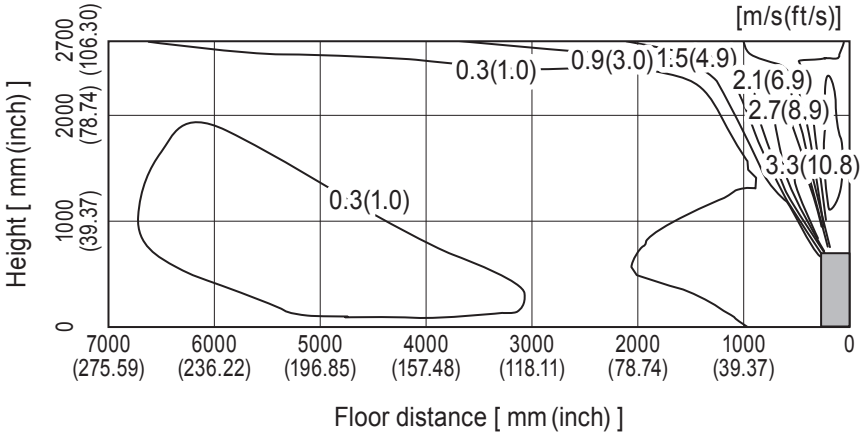

Note : These figures show typical airflow distributions in the conditions above. In the actual installation, they may differ from these figures under the influence of air temperature conditions, ceiling height, cooling/heating load,obstacles,etc.

MFZ-KJ18NA Single connection

Standard installation (Two-direction air flow)

Temperature distribution

<Cooling mode> Air volume: super high
Air direction: auto (upward air flow)

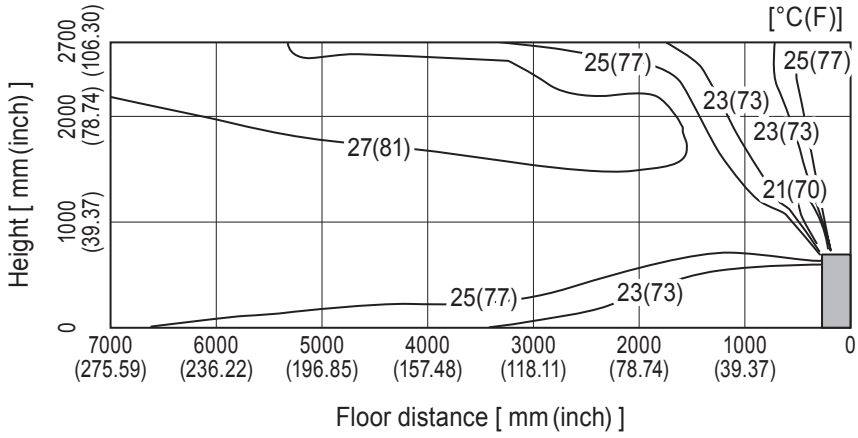

<Heating mode> Air volume: super high
Air direction: auto (downward air flow)

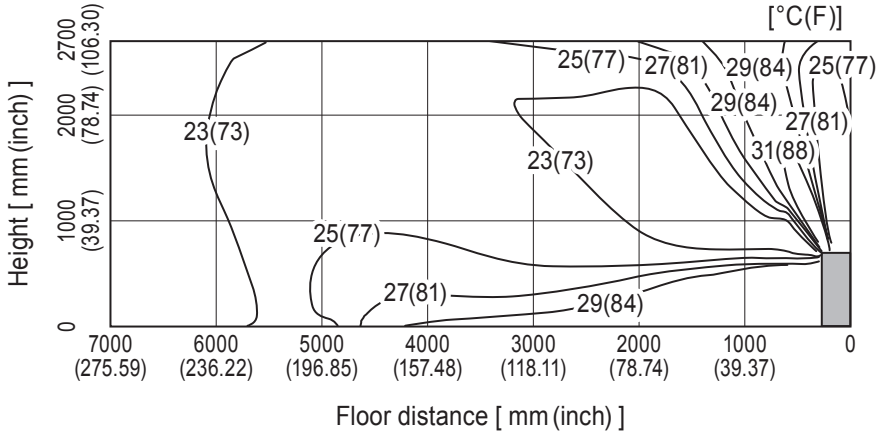

Note : These figures show typical airflow distributions in the conditions above. In the actual installation, they may differ from these figures under the influence of air temperature conditions, ceiling height, cooling/heating load,obstacles,etc.

MFZ-KJ18NA Single connection

Standard installation (Two-direction air flow)

Airflow distribution

<Cooling mode> Air volume: super high
Air direction: auto (upward air flow)

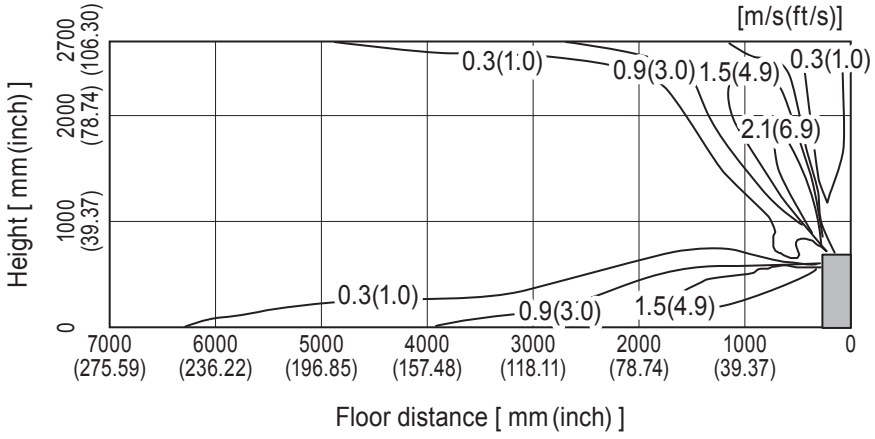

<Heating mode> Air volume: super high
Air direction: auto (downward air flow)

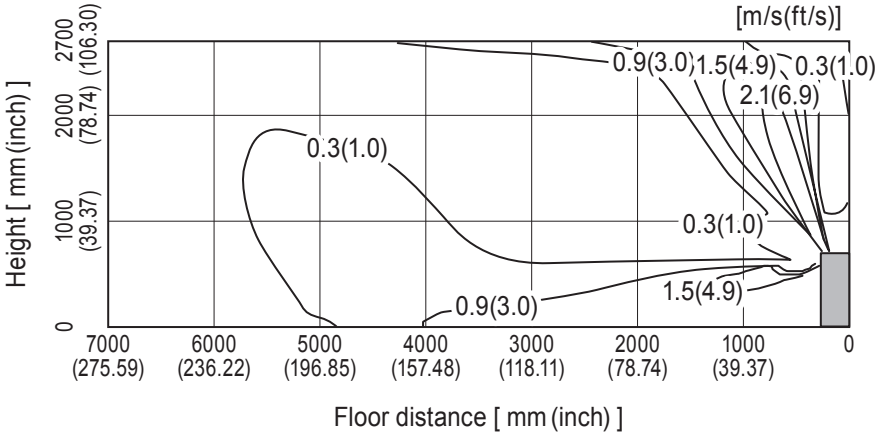

Note : These figures show typical airflow distributions in the conditions above. In the actual installation, they may differ from these figures under the influence of air temperature conditions, ceiling height, cooling/heating load,obstacles,etc.

B. MULTI-USE

MXZ-2C20NA2 MXZ-3C24NA2 MXZ-3C30NA2 MXZ-4C36NA2
MXZ-5C42NA2
MXZ-2C20NAHZ2 MXZ-3C24NAHZ2 MXZ-3C30NAHZ2

1 REFERENCE SERVICE MANUAL

For information on service, please refer to the service manual as follows.

1-1. OUTDOOR UNIT

Model name	Service Ref.	Service Manual No.
MXZ-2C20NA2	MXZ-2C20NA2 - U1	OBH702F OBB702D
MXZ-3C24NA2	MXZ-3C24NA2 - U1	
MXZ-3C30NA2	MXZ-3C30NA2 - U1	
MXZ-4C36NA2	MXZ-4C36NA2 - U1	
MXZ-5C42NA2	MXZ-5C42NA2 - U1	
MXZ-2C20NAHZ2	MXZ-2C20NAHZ2 - U1	
MXZ-3C24NAHZ2	MXZ-3C24NAHZ2 - U1	
MXZ-3C30NAHZ2	MXZ-3C30NAHZ2 - U1	

2 SPECIFICATIONS

2-1. OUTDOOR UNIT
MXZ-2C20NA2

Item			Outdoor model	MXZ-2C20NA2	
			Indoor type	Non-Duct (09+09)	Duct (09+12)
Capacity	Cooling	*1	Btu/h	18,000	20,000
	Heating 47	*1	Btu/h	22,000	22,000
	Heating 17	*2	Btu/h	1,2500	13,500
Power consumption	Cooling	*1	W	1,417	2,000
	Heating 47	*1	W	1,641	1,771
	Heating 17	*2	W	1,300	1,350
EER	Cooling			12.7	10.0
SEER	Cooling			20.0	16.0
HSPF IV(V)	Heating			10.0	9.3
COP	Heating			3.93	3.64
External finish				Munsell 3.0Y 7.8/1.1	
Power supply			V, phase, Hz	208/230, 1, 60	
Max. fuse size (time delay)			A	20	
Min. circuit ampacity			A	17.2	
Fan motor			F.L.A	1.77	
Compressor	Model			SNB140FQUH2T	
	Winding resistance (at 68 ºF)		Ω	U-V1.99 V-W 1.99 W-U 1.99	
			R.L.A	10.7	
			L.R.A	15.5	
Refrigerant control				LEV	
Sound level			dB(A)	50/54	
Defrost method				Reverse cycle	
Dimensions	W		in.	33-1/16	
	D		in.	13	
	H		in.	27-15/16	
Weight			lb.	126	
Remote controller				Wireless type	
Control voltage (by built-in transformer)				12 - 24 VDC	
Refrigerant piping				Not supplied (optional parts)	
Valve size	Liquid		in.	1/4	
	Gas		in.	3/8	
Connection method	Indoor			Flared	
	Outdoor			Flared	
Refrigerant charge (R410A)			lb.	5 lb. 15 oz.	
Refrigeration oil (Model)			fl oz. (L)	20.3 (0.6) (NEO22)	

NOTE: Test conditions are based on ARI 210/240.

Unit: °F

Mode	Test	Indoor air condition		Outdoor air condition	
		Dry bulb	Wet bulb	Dry bulb	Wet bulb
Cooling	*1: "A" Cooling steady state at rated compressor speed	80	67	95	(75)
	"B-2" Cooling steady state at rated compressor speed	80	67	82	(65)
	"B-1" Cooling steady state at minimum compressor speed	80	67	82	(65)
	Low ambient cooling steady state at minimum compressor speed	80	67	67	(53.5)
	Intermediate cooling steady state at intermediate compressor speed	80	67	87	(69)
Heating	*1: Standard rating-heating at rated compressor speed	70	60	47	43
	*2: Low temperature heating at maximum compressor speed	70	60	17	15
	Maximum temperature heating at minimum compressor speed	70	60	62	56.5
	High temperature heating at minimum compressor speed	70	60	47	43
	Frost accumulation at rated compressor speed	70	60	35	33
	Frost accumulation at intermediate compressor speed	70	60	35	33

MXZ-3C24NA2

Item			Outdoor model	MXZ-3C24NA2	
			Indoor type	Non-Duct (06+09+09)	Duct (09+09+09)
Capacity	Cooling	*1	Btu/h	22,000	23,600
	Heating 47	*1	Btu/h	25,000	24,600
	Heating 17	*2	Btu/h	19,600	19,600
Power consumption	Cooling	*1	W	1,620	2,100
	Heating 47	*1	W	1,750	1,900
	Heating 17	*2	W	2,580	2,440
EER	Cooling			13.6	11.2
SEER	Cooling			20.0	16.0
HSPF IV(V)	Heating			9.8 (7.6)	9.2 (7.6)
COP	Heating			4.20	3.80
External finish				Munsell 3.0Y 7.8/1.1	
Power supply			V, phase, Hz	208/230, 1, 60	
Max. fuse size (time delay)			A	25	
Min. circuit ampacity			A	22.1	
Fan motor			F.L.A	2.43	
Compressor	Model			SNB220FQGMC	
	Winding resistance (at 68 ºF)		Ω	U-V 0.95 V-W 0.95 W-U 0.95	
			R.L.A	12	
			L.R.A	13.7	
Refrigerant control				LEV	
Sound level			dB(A)	51/55	
Defrost method				Reverse cycle	
Dimensions	W		in.	37-13/32	
	D		in.	13	
	H		in.	31-11/32	
Weight			lb.	137	
Remote controller				Wireless type	
Control voltage (by built-in transformer)				12-24 VDC	
Refrigerant piping				Not supplied (optional parts)	
Valve size	Liquid		in.	1/4	
	Gas		in.	A: 1/2 B,C: 3/8	
Connection method	Indoor			Flared	
	Outdoor			Flared	
Refrigerant charge (R410A)			lb.	6 lb. 13 oz.	
Refrigeration oil (Model)			fl oz. (L)	23.7 (0.7) (FV50S)	

NOTE : Test conditions are based on ARI 210/240.

Unit: °F

Mode	Test	Indoor air condition		Outdoor air condition	
		Dry bulb	Wet bulb	Dry bulb	Wet bulb
Cooling	*1: "A" Cooling steady state at rated compressor speed	80	67	95	(75)
	"B-2" Cooling steady state at rated compressor speed	80	67	82	(65)
	"B-1" Cooling steady state at minimum compressor speed	80	67	82	(65)
	Low ambient cooling steady state at minimum compressor speed	80	67	67	(53.5)
	Intermediate cooling steady state at intermediate compressor speed	80	67	87	(69)
Heating	*1: Standard rating-heating at rated compressor speed	70	60	47	43
	*2: Low temperature heating at maximum compressor speed	70	60	17	15
	Maximum temperature heating at minimum compressor speed	70	60	62	56.5
	High temperature heating at minimum compressor speed	70	60	47	43
	Frost accumulation at rated compressor speed	70	60	35	33
	Frost accumulation at intermediate compressor speed	70	60	35	33

MXZ-3C30NA2

Item			Outdoor model	MXZ-3C30NA2	
			Indoor type	Non-Duct (09+09+12)	Duct (09+09+12)
Capacity	Cooling	*1	Btu/h	28,400	27,400
	Heating 47	*1	Btu/h	28,600	27,600
	Heating 17	*2	Btu/h	21,000	21,000
Power consumption	Cooling	*1	W	2,680	2,840
	Heating 47	*1	W	2,150	2,220
	Heating 17	*2	W	2,740	2,820
EER	Cooling			10.6	9.6
SEER	Cooling			19.0	16.2
HSPF IV(V)	Heating			10.6 (8.0)	9.6 (8.0)
COP	Heating			3.90	3.64
External finish				Munsell 3.0Y 7.8/1.1	
Power supply			V, phase, Hz	208/230, 1, 60	
Max. fuse size (time delay)			A	25	
Min. circuit ampacity			A	22.1	
Fan motor			F.L.A	2.43	
Compressor	Model			SNB220FQGMC	
	Winding resistance (at 68 ºF)		Ω	U-V 0.95 V-W 0.95 W-U 0.95	
			R.L.A	12	
			L.R.A	13.7	
Refrigerant control				LEV	
Sound level			dB(A)	52/56	
Defrost method				Reverse cycle	
Dimensions	W		in.	37-13/32	
	D		in.	13	
	H		in.	31-11/32	
Weight			lb.	137	
Remote controller				Wireless type	
Control voltage (by built-in transformer)				12-24 VDC	
Refrigerant piping				Not supplied (optional parts)	
Valve size	Liquid		in.	1/4	
	Gas		in.	A: 1/2 B,C: 3/8	
Connection method	Indoor			Flared	
	Outdoor			Flared	
Refrigerant charge (R410A)			lb.	6 lb. 13 oz.	
Refrigeration oil (Model)			fl oz. (L)	23.7 (0.7) (FV50S)	

NOTE : Test conditions are based on ARI 210/240.

Unit: °F

Mode	Test	Indoor air condition		Outdoor air condition	
		Dry bulb	Wet bulb	Dry bulb	Wet bulb
Cooling	*1: "A" Cooling steady state at rated compressor speed	80	67	95	(75)
	"B-2" Cooling steady state at rated compressor speed	80	67	82	(65)
	"B-1" Cooling steady state at minimum compressor speed	80	67	82	(65)
	Low ambient cooling steady state at minimum compressor speed	80	67	67	(53.5)
	Intermediate cooling steady state at intermediate compressor speed	80	67	87	(69)
Heating	*1: Standard rating-heating at rated compressor speed	70	60	47	43
	*2: Low temperature heating at maximum compressor speed	70	60	17	15
	Maximum temperature heating at minimum compressor speed	70	60	62	56.5
	High temperature heating at minimum compressor speed	70	60	47	43
	Frost accumulation at rated compressor speed	70	60	35	33
	Frost accumulation at intermediate compressor speed	70	60	35	33

MXZ-4C36NA2

Item			Outdoor model	MXZ-4C36NA2	
			Indoor type	Non-Duct (09+09+09+09)	Duct (09+09+09+09)
Capacity	Cooling	*1	Btu/h	35,400	34,400
	Heating 47	*1	Btu/h	36,000	34,400
	Heating 17	*2	Btu/h	26,600	26,600
Power consumption	Cooling	*1	W	3,760	3,940
	Heating 47	*1	W	3,020	3,100
	Heating 17	*2	W	3,440	3,540
EER	Cooling			9.4	8.7
SEER	Cooling			19.2	16.0
HSPF IV(V)	Heating			11.0 (8.4)	9.8 (8.4)
COP	Heating			3.50	3.25
External finish				Munsell 3.0Y 7.8/1.1	
Power supply			V, phase, Hz	208/230, 1, 60	
Max. fuse size (time delay)			A	25	
Min. circuit ampacity			A	22.1	
Fan motor			F.L.A	2.43	
Compressor	Model			SNB220FQGMC	
	Winding resistance (at 68 ºF)		Ω	U-V 0.95 V-W 0.95 W-U 0.95	
			R.L.A	12	
			L.R.A	13.7	
Refrigerant control				LEV	
Sound level			dB(A)	54/56	
Defrost method				Reverse cycle	
Dimensions	W		in.	37-13/32	
	D		in.	13	
	H		in.	31-11/32	
Weight			lb.	139	
Remote controller				Wireless type	
Control voltage (by built-in transformer)				12-24 VDC	
Refrigerant piping				Not supplied (optional parts)	
Valve size	Liquid		in.	1/4	
	Gas		in.	A: 1/2 B,C,D: 3/8	
Connection method	Indoor			Flared	
	Outdoor			Flared	
Refrigerant charge (R410A)			lb.	6 lb. 13 oz.	
Refrigeration oil (Model)			fl oz. (L)	23.7 (0.7) (FV50S)	

NOTE : Test conditions are based on ARI 210/240.

Unit: °F

Mode	Test	Indoor air condition		Outdoor air condition	
		Dry bulb	Wet bulb	Dry bulb	Wet bulb
Cooling	*1: "A" Cooling steady state at rated compressor speed	80	67	95	(75)
	"B-2" Cooling steady state at rated compressor speed	80	67	82	(65)
	"B-1" Cooling steady state at minimum compressor speed	80	67	82	(65)
	Low ambient cooling steady state at minimum compressor speed	80	67	67	(53.5)
	Intermediate cooling steady state at intermediate compressor speed	80	67	87	(69)
Heating	*1: Standard rating-heating at rated compressor speed	70	60	47	43
	*2: Low temperature heating at maximum compressor speed	70	60	17	15
	Maximum temperature heating at minimum compressor speed	70	60	62	56.5
	High temperature heating at minimum compressor speed	70	60	47	43
	Frost accumulation at rated compressor speed	70	60	35	33
	Frost accumulation at intermediate compressor speed	70	60	35	33

MXZ-5C42NA2

Item			Outdoor model	MXZ-5C42NA2	
			Indoor type	Non-Duct (06+09+09+09+09)	Duct (09+09+09+09+09)
Capacity	Cooling	*1	Btu/h	40,500	37,500
	Heating 47	*1	Btu/h	45,000	41,000
	Heating 17	*2	Btu/h	30,500	29,100
Power consumption	Cooling	*1	W	4,403	4,112
	Heating 47	*1	W	3,575	3,463
	Heating 17	*2	W	4,800	5,500
EER	Cooling			9.2	9.0
SEER	Cooling			19.7	15.2
HSPF IV(V)	Heating			10.3 (7.7)	9.1 (7.7)
COP	Heating			3.69	3.47
External finish				Munsell 3.0Y 7.8/1.1	
Power supply			V, phase, Hz	208/230, 1, 60	
Max. fuse size (time delay)			A	40	
Min. circuit ampacity			A	32.5	
Fan motor			F.L.A	2.43	
Compressor	Model			MNB33FBTMC-L	
	Winding resistance (at 68 ºF)		Ω	U-V 0.30 V-W 0.30 W-U 0.30	
			R.L.A	20	
			L.R.A	28.8	
Refrigerant control				LEV	
Sound level			dB(A)	56/58	
Defrost method				Reverse cycle	
Dimensions	W		in.	37-13/32	
	D		in.	13	
	H		in.	41-17/64	
Weight			lb.	189	
Remote controller				Wireless type	
Control voltage (by built-in transformer)				12-24 VDC	
Refrigerant piping				Not supplied (optional parts)	
Valve size	Liquid		in.	1/4	
	Gas		in.	A:1/2 B,C,D,E: 3/8	
Connection method	Indoor			Flared	
	Outdoor			Flared	
Refrigerant charge (R410A)			lb.	8 lb. 13 oz.	
Refrigeration oil (Model)			fl oz. (L)	37.2 (1.1) (FV50S)	

NOTE : Test conditions are based on ARI 210/240.

Unit: °F

Mode	Test	Indoor air condition		Outdoor air condition	
		Dry bulb	Wet bulb	Dry bulb	Wet bulb
Cooling	*1: "A" Cooling steady state at rated compressor speed	80	67	95	(75)
	"B-2" Cooling steady state at rated compressor speed	80	67	82	(65)
	"B-1" Cooling steady state at minimum compressor speed	80	67	82	(65)
	Low ambient cooling steady state at minimum compressor speed	80	67	67	(53.5)
	Intermediate cooling steady state at intermediate compressor speed	80	67	87	(69)
Heating	*1: Standard rating-heating at rated compressor speed	70	60	47	43
	*2: Low temperature heating at maximum compressor speed	70	60	17	15
	Maximum temperature heating at minimum compressor speed	70	60	62	56.5
	High temperature heating at minimum compressor speed	70	60	47	43
	Frost accumulation at rated compressor speed	70	60	35	33
	Frost accumulation at intermediate compressor speed	70	60	35	33

MXZ-2C20NAHZ2

Item			Outdoor model	MXZ-2C20NAHZ2	
			Indoor type	Non-Duct (09+09)	Duct (09+12)
Capacity	Cooling	*1	Btu/h	18,000	20,000
	Heating 47	*1	Btu/h	22,000	22,000
	Heating 17	*2	Btu/h	22,000	22,000
Power consumption	Cooling	*1	W	1,334	1,819
	Heating 47	*1	W	1,612	1,748
	Heating 17	*2	W	3,071	3,224
EER	Cooling			13.5	11.0
SEER	Cooling			17.0	15.0
HSPF IV(V)	Heating			9.8 (7.8)	9.5 (7.8)
COP	Heating			4.00	3.69
External finish				Munsell 3.0Y 7.8/1.1	
Power supply			V, phase, Hz	208/230, 1, 60	
Max. fuse size (time delay)			A	40	
Min. circuit ampacity			A	29.5	
Fan motor			F.L.A	2.43	
Compressor	Model			MNB33FBTMC-L	
	Winding resistance (at 68 ºF)		Ω	U-V 0.30 V-W 0.30 W-U 0.30	
			R.L.A	20	
			L.R.A	28.8	
Refrigerant control				LEV	
Sound level			dB(A)	54/58	
Defrost method				Reverse cycle	
Dimensions	W		in.	37-13/32	
	D		in.	13	
	H		in.	41-17/64	
Weight			lb.	187	
Remote controller				Wireless type	
Control voltage (by built-in transformer)				12-24 VDC	
Refrigerant piping				Not supplied (optional parts)	
Valve size	Liquid		in.	1/4	
	Gas		in.	A,B: 3/8	
Connection method	Indoor			Flared	
	Outdoor			Flared	
Refrigerant charge (R410A)			lb.	8 lb. 13 oz.	
Refrigeration oil (Model)			fl oz. (L)	37.2 (1.1) (FV50S)	

NOTE : Test conditions are based on ARI 210/240.

Unit: °F

Mode	Test	Indoor air condition		Outdoor air condition	
		Dry bulb	Wet bulb	Dry bulb	Wet bulb
Cooling	*1: "A" Cooling steady state at rated compressor speed	80	67	95	(75)
	"B-2" Cooling steady state at rated compressor speed	80	67	82	(65)
	"B-1" Cooling steady state at minimum compressor speed	80	67	82	(65)
	Low ambient cooling steady state at minimum compressor speed	80	67	67	(53.5)
	Intermediate cooling steady state at intermediate compressor speed	80	67	87	(69)
Heating	*1: Standard rating-heating at rated compressor speed	70	60	47	43
	*2: Low temperature heating at maximum compressor speed	70	60	17	15
	Maximum temperature heating at minimum compressor speed	70	60	62	56.5
	High temperature heating at minimum compressor speed	70	60	47	43
	Frost accumulation at rated compressor speed	70	60	35	33
	Frost accumulation at intermediate compressor speed	70	60	35	33

MXZ-3C24NAHZ2

Item			Outdoor model	MXZ-3C24NAHZ2	
			Indoor type	Non-Duct (06+06+09)	Duct (09+09+09)
Capacity	Cooling	*1	Btu/h	22,000	23,600
	Heating 47	*1	Btu/h	25,000	24,600
	Heating 17	*2	Btu/h	25,000	24,600
Power consumption	Cooling	*1	W	1,630	2,360
	Heating 47	*1	W	1,725	1,871
	Heating 17	*2	W	3,557	3,795
EER	Cooling			13.5	10.0
SEER	Cooling			19.0	15.5
HSPF IV(V)	Heating			10.0 (7.4)	9.0 (7.4)
COP	Heating			4.25	3.80
External finish				Munsell 3.0Y 7.8/1.1	
Power supply			V, phase, Hz	208/230, 1, 60	
Max. fuse size (time delay)			A	40	
Min. circuit ampacity			A	30.5	
Fan motor			F.L.A	2.43	
Compressor	Model			MNB33FBTMC-L	
	Winding resistance (at 68 ºF)		Ω	U-V 0.30 V-W 0.30 W-U 0.30	
			R.L.A	20	
			L.R.A	28.8	
Refrigerant control				LEV	
Sound level			dB(A)	54/58	
Defrost method				Reverse cycle	
Dimensions	W		in.	37-13/32	
	D		in.	13	
	H		in.	41-17/64	
Weight			lb.	189	
Remote controller				Wireless type	
Control voltage (by built-in transformer)				12-24 VDC	
Refrigerant piping				Not supplied (optional parts)	
Valve size	Liquid		in.	1/4	
	Gas		in.	A: 1/2 B,C: 3/8	
Connection method	Indoor			Flared	
	Outdoor			Flared	
Refrigerant charge (R410A)			lb.	8 lb. 13 oz.	
Refrigeration oil (Model)			fl oz. (L)	37.2 (1.1) (FV50S)	

NOTE : Test conditions are based on ARI 210/240.

Unit: °F

Mode	Test	Indoor air condition		Outdoor air condition	
		Dry bulb	Wet bulb	Dry bulb	Wet bulb
Cooling	*1: "A" Cooling steady state at rated compressor speed	80	67	95	(75)
	"B-2" Cooling steady state at rated compressor speed	80	67	82	(65)
	"B-1" Cooling steady state at minimum compressor speed	80	67	82	(65)
	Low ambient cooling steady state at minimum compressor speed	80	67	67	(53.5)
	Intermediate cooling steady state at intermediate compressor speed	80	67	87	(69)
Heating	*1: Standard rating-heating at rated compressor speed	70	60	47	43
	*2: Low temperature heating at maximum compressor speed	70	60	17	15
	Maximum temperature heating at minimum compressor speed	70	60	62	56.5
	High temperature heating at minimum compressor speed	70	60	47	43
	Frost accumulation at rated compressor speed	70	60	35	33
	Frost accumulation at intermediate compressor speed	70	60	35	33

MXZ-3C30NAHZ2

Item			Outdoor model	MXZ-3C30NAHZ2	
			Indoor type	Non-Duct (09+09+12)	Duct (09+09+12)
Capacity	Cooling	*1	Btu/h	28,400	27,400
	Heating 47	*1	Btu/h	28,600	27,600
	Heating 17	*2	Btu/h	28,600	27,600
Power consumption	Cooling	*1	W	2,272	2,661
	Heating 47	*1	W	2,096	2,187
	Heating 17	*2	W	4,192	4,258
EER	Cooling			12.5	10.3
SEER	Cooling			18.0	16.0
HSPF IV(V)	Heating			11.0 (8.5)	9.8 (7.7)
COP	Heating			4.00	3.70
External finish				Munsell 3.0Y 7.8/1.1	
Power supply			V, phase, Hz	208/230, 1, 60	
Max. fuse size (time delay)			A	40	
Min. circuit ampacity			A	30.5	
Fan motor			F.L.A	2.43	
Compressor	Model			MNB33FBTMC-L	
	Winding resistance (at 68 ºF)		Ω	U-V 0.30 V-W 0.30 W-U 0.30	
			R.L.A	20	
			L.R.A	28.8	
Refrigerant control				LEV	
Sound level			dB(A)	54/58	
Defrost method				Reverse cycle	
Dimensions	W		in.	37-13/32	
	D		in.	13	
	H		in.	41-17/64	
Weight			lb.	189	
Remote controller				Wireless type	
Control voltage (by built-in transformer)				12-24 VDC	
Refrigerant piping				Not supplied (optional parts)	
Valve size	Liquid		in.	1/4	
	Gas		in.	A: 1/2 B,C: 3/8	
Connection method	Indoor			Flared	
	Outdoor			Flared	
Refrigerant charge (R410A)			lb.	8 lb. 13 oz.	
Refrigeration oil (Model)			fl oz. (L)	37.2 (1.1) (FV50S)	

NOTE : Test conditions are based on ARI 210/240.

Unit: °F

Mode	Test	Indoor air condition		Outdoor air condition	
		Dry bulb	Wet bulb	Dry bulb	Wet bulb
Cooling	*1: "A" Cooling steady state at rated compressor speed	80	67	95	(75)
	"B-2" Cooling steady state at rated compressor speed	80	67	82	(65)
	"B-1" Cooling steady state at minimum compressor speed	80	67	82	(65)
	Low ambient cooling steady state at minimum compressor speed	80	67	67	(53.5)
	Intermediate cooling steady state at intermediate compressor speed	80	67	87	(69)
Heating	*1: Standard rating-heating at rated compressor speed	70	60	47	43
	*2: Low temperature heating at maximum compressor speed	70	60	17	15
	Maximum temperature heating at minimum compressor speed	70	60	62	56.5
	High temperature heating at minimum compressor speed	70	60	47	43
	Frost accumulation at rated compressor speed	70	60	35	33
	Frost accumulation at intermediate compressor speed	70	60	35	33

3 OUTLINES AND DIMENSIONS

3-1. OUTDOOR UNIT
MXZ-2C20NA2

Unit: inch (mm)

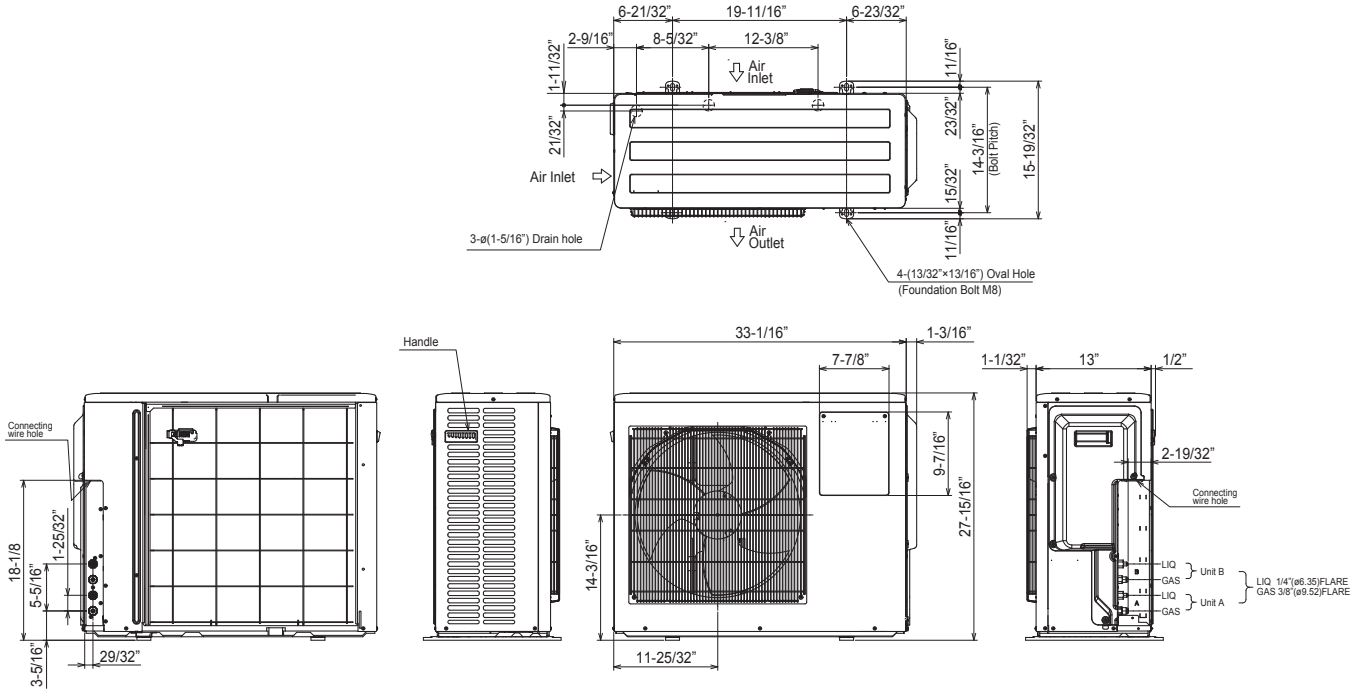

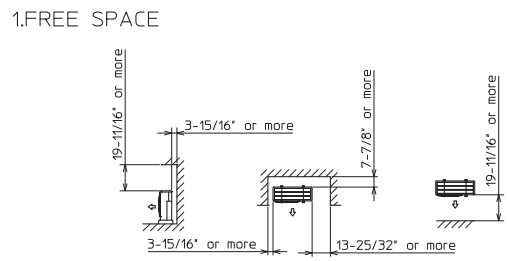

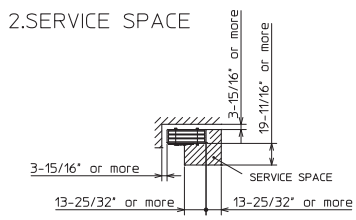

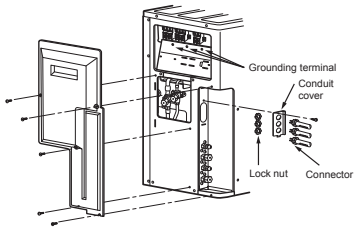

MXZ-3C24NA2
MXZ-3C30NA2

Unit: inch (mm)

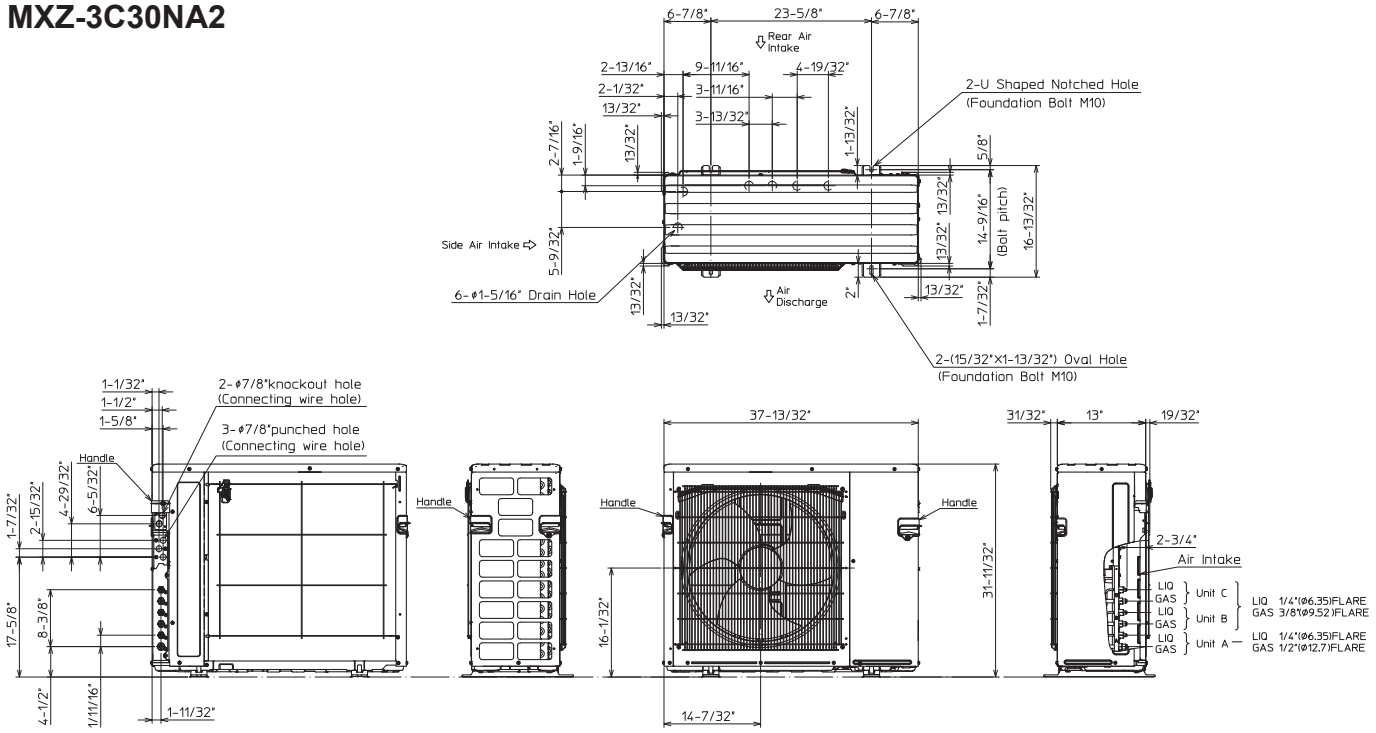

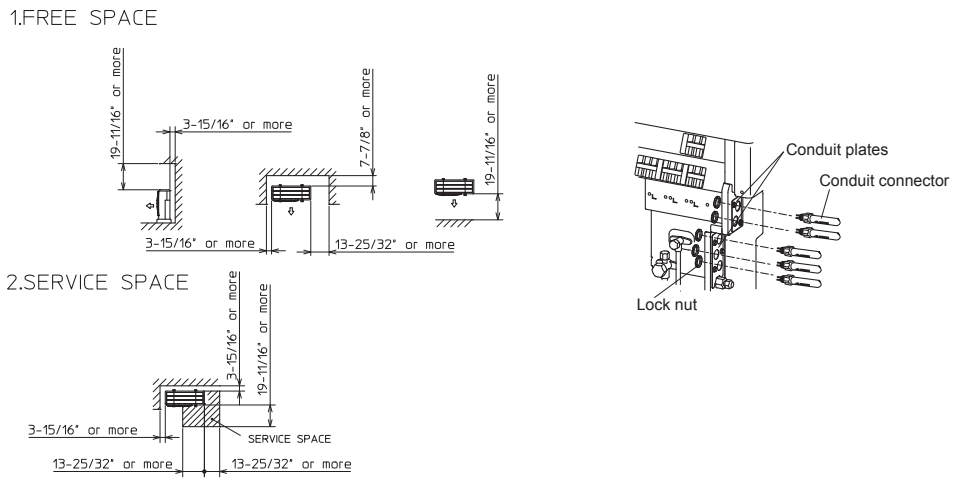

MXZ-4C36NA2

Unit: inch (mm)

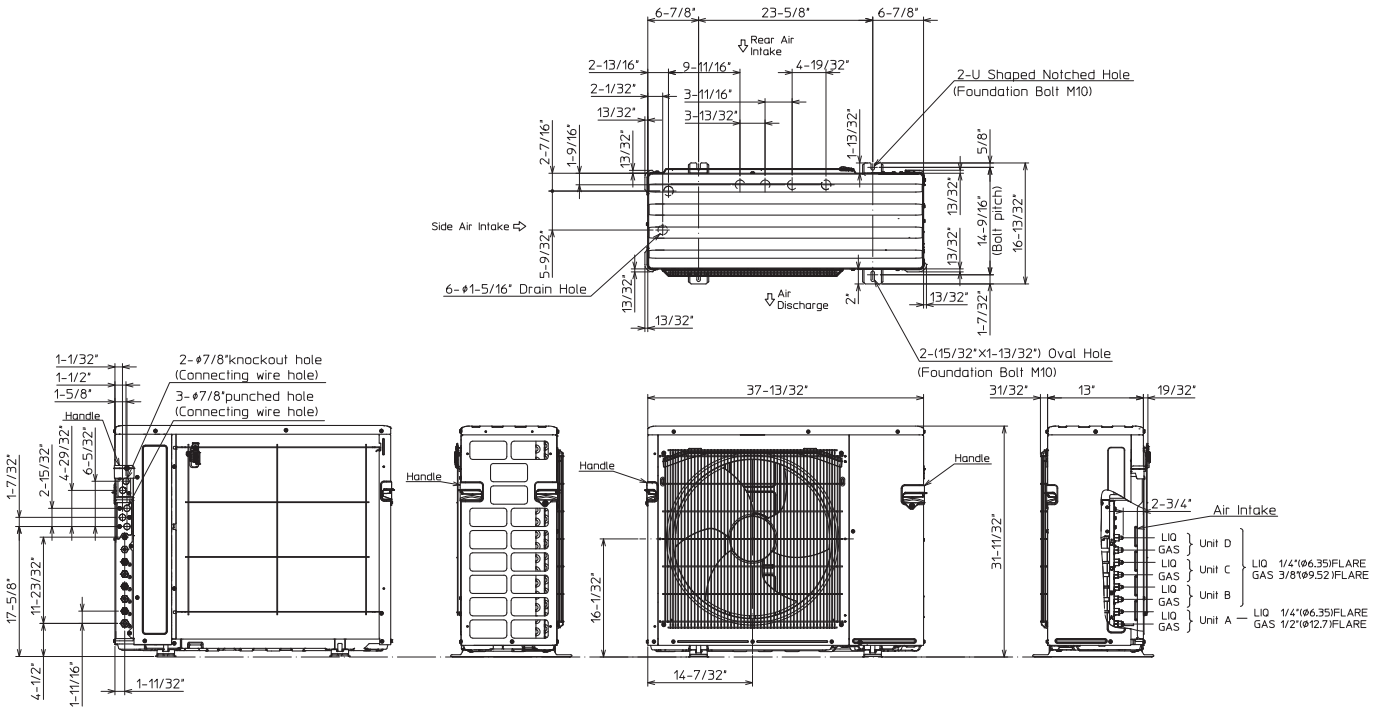

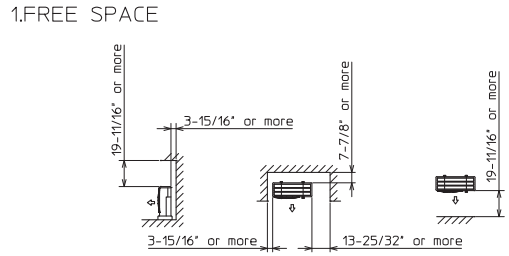

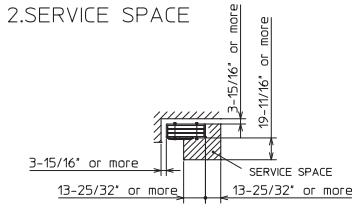

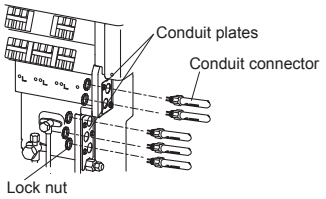

MXZ-5C42NA2

Unit: inch (mm)

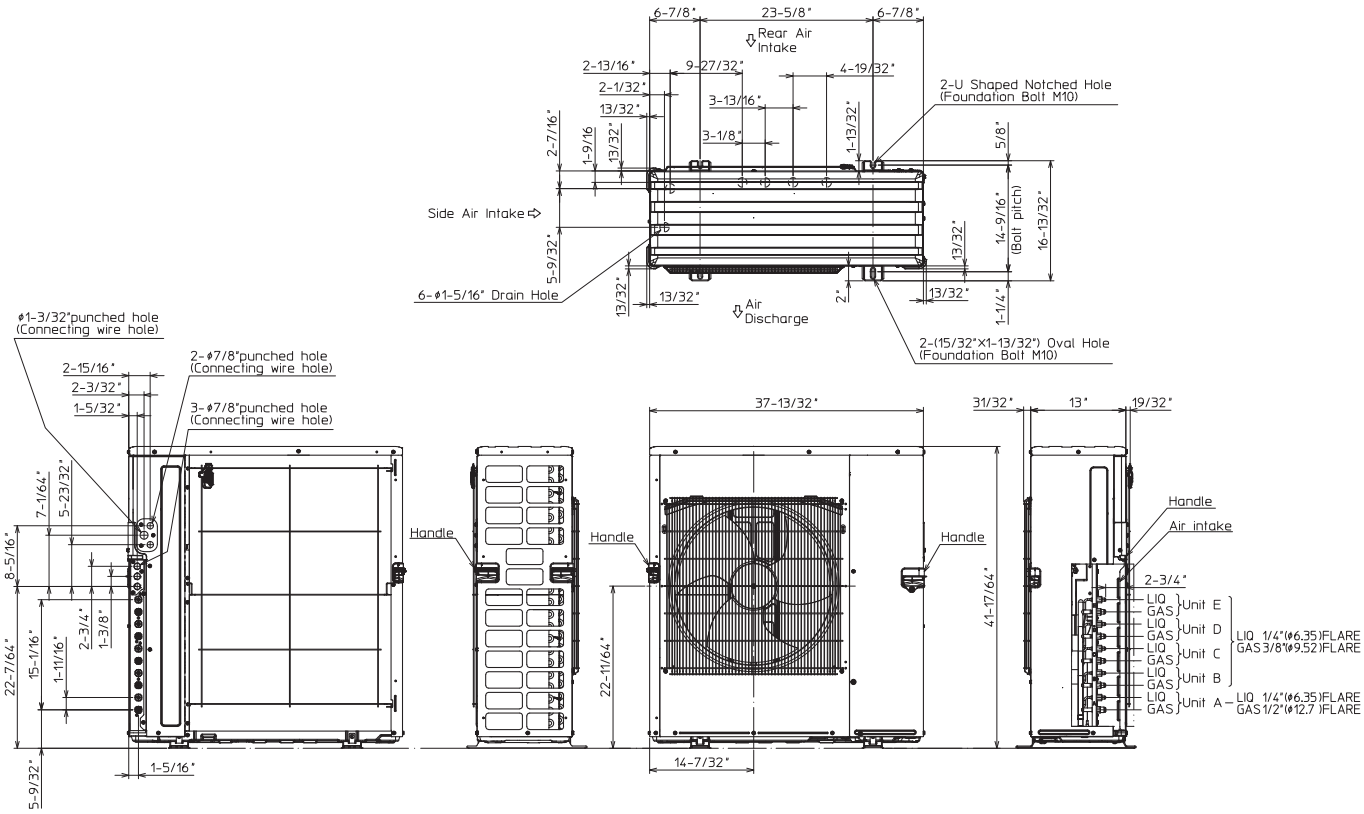

1.FREE SPACE

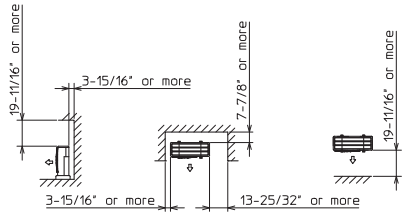

2.SERVICE SPACE

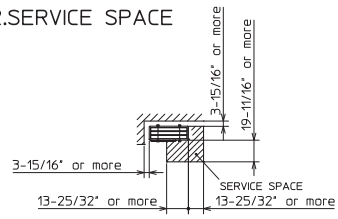

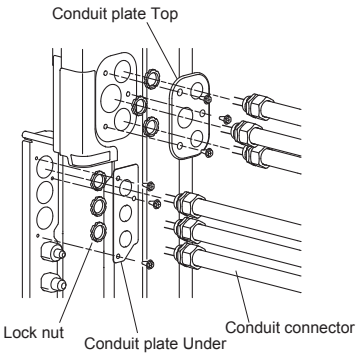

MXZ-2C20NAHZ2

Unit: inch (mm)

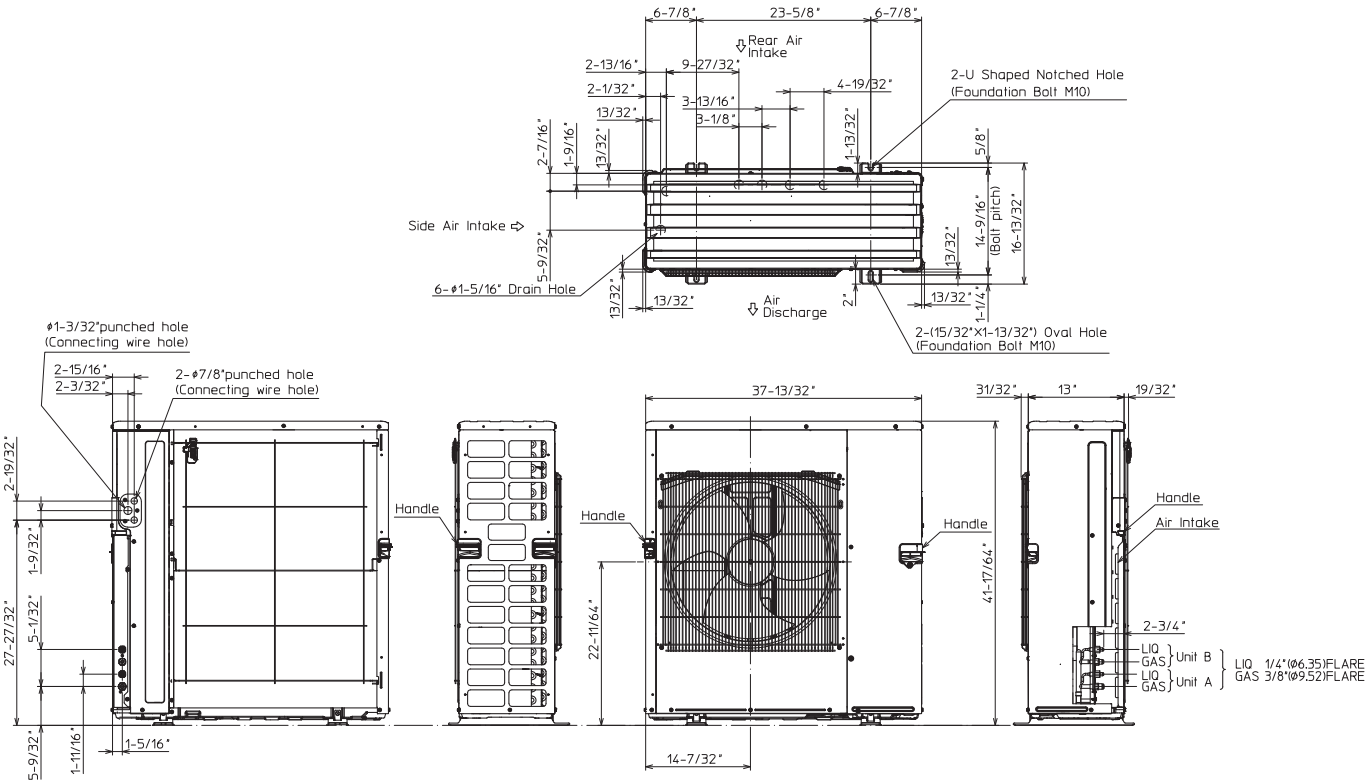

1.FREE SPACE

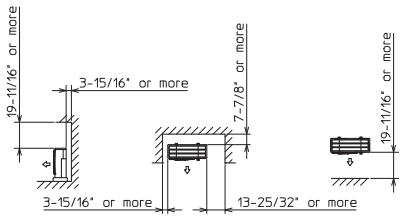

2.SERVICE SPACE

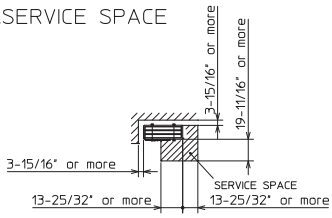

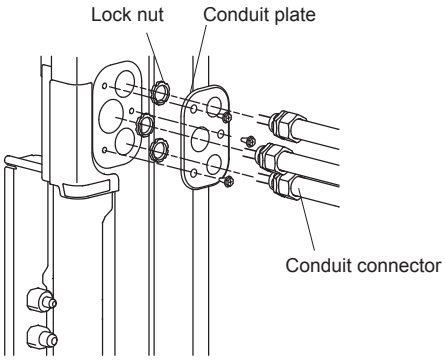

MXZ-3C24NAHZ2
MXZ-3C30NAHZ2

Unit: inch (mm)

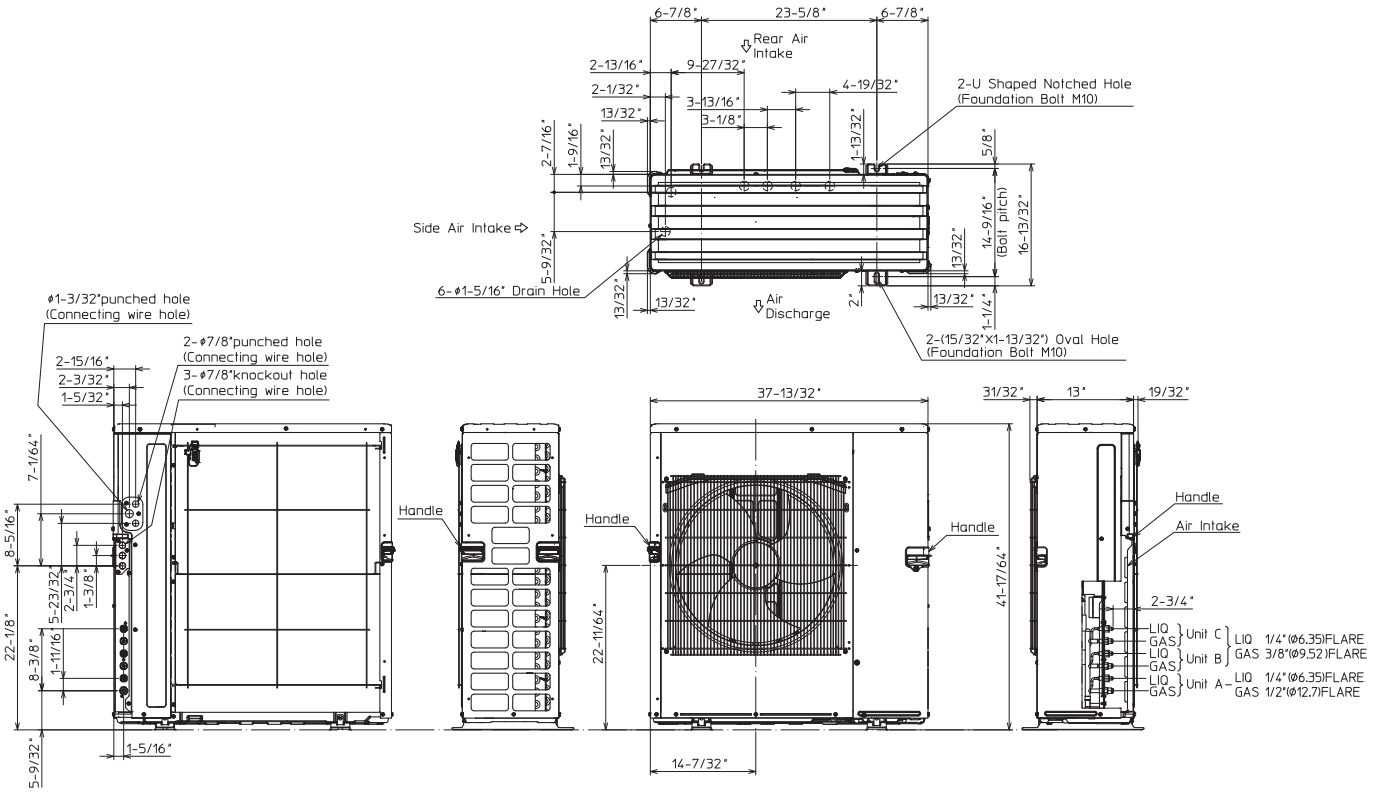

1.FREE SPACE

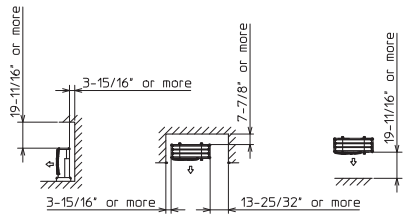

2.SERVICE SPACE

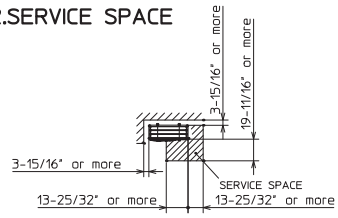

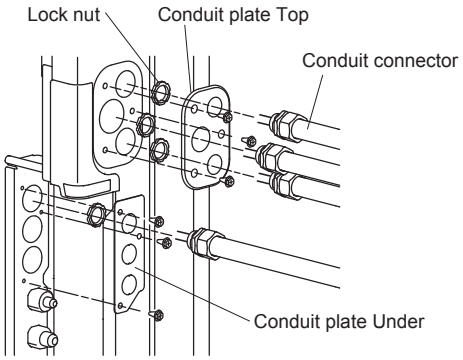

4 POSITION OF THE CENTER OF GRAVITY

4-1. OUTDOOR UNIT

Unit: inch (mm)

MXZ-2C20NA2

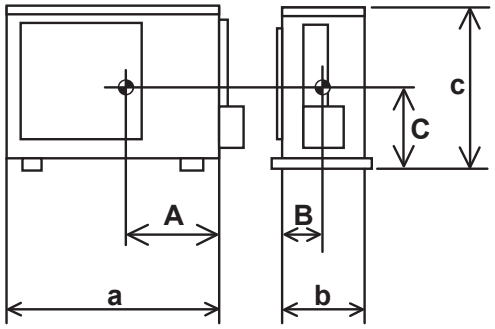

Model name	A	B	C	a	b	c
MXZ-2C20NA2	11-1/32 (280)	6-3/32 (155)	13 (330)	33-1/16 (840)	13 (330)	27-15/16 (710)
MXZ-3C24NA2 MXZ-3C30NA2 MXZ-4C36NA2	14-3/8 (365)	6-5/16 (160)	12-27/32 (326)	37-13/32 (950)	13 (330)	31-11/32 (796)
MXZ-2C20NAHZ2 MXZ-3C24NAHZ2 MXZ-3C30NAHZ2 MXZ-5C42NA2	12 (305)	5-29/32 (150)	17-23/32 (450)	37-13/32 (950)	13 (330)	41-17/64 (1048)

MXZ-3C24NA2 MXZ-2C20NAHZ2
MXZ-3C30NA2 MXZ-3C24NAHZ2
MXZ-4C36NA2 MXZ-3C30NAHZ2
MXZ-5C42NA2

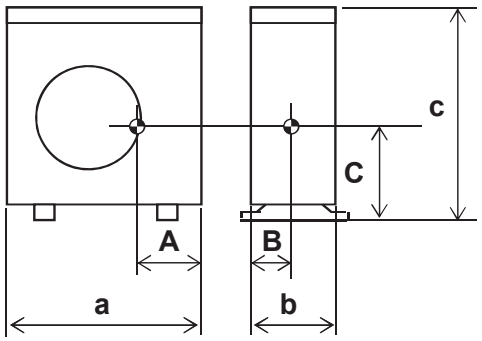

5 WIRING DIAGRAM

5-1. OUTDOOR UNIT
MXZ-2C20NA2

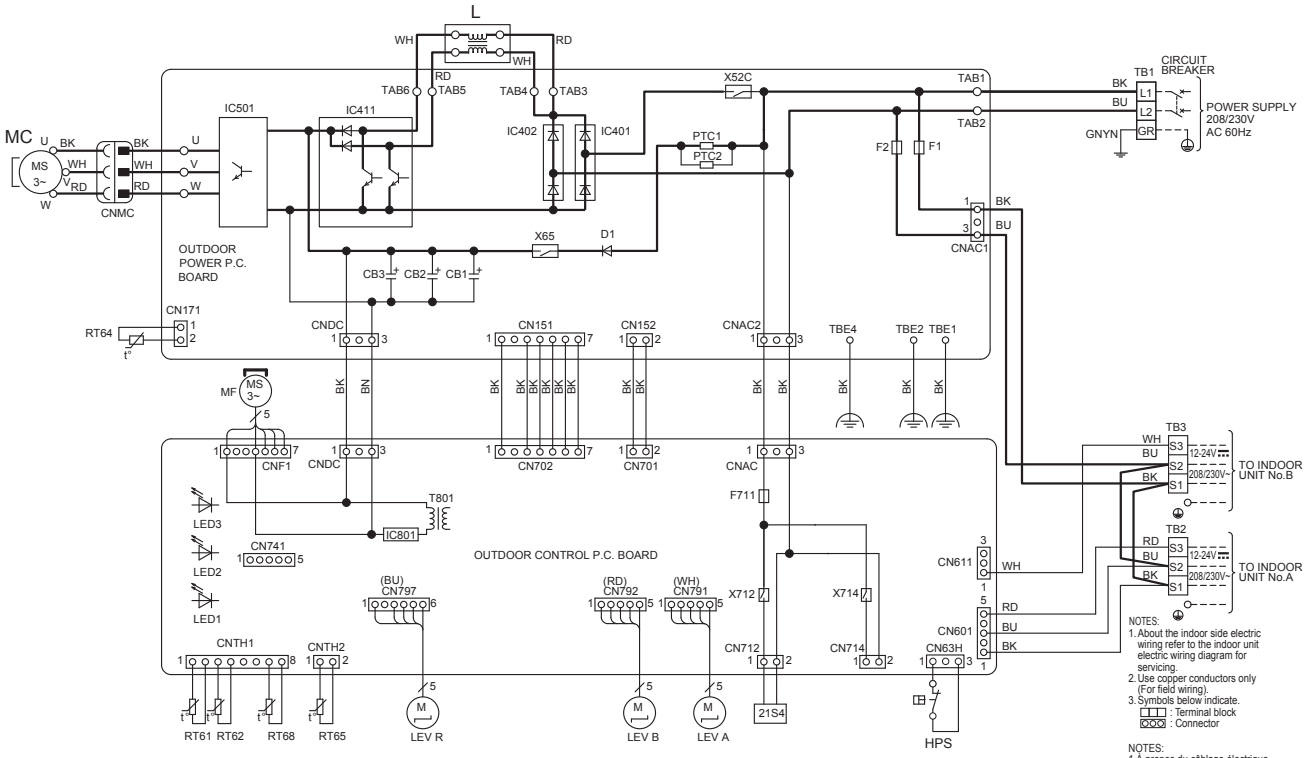

NOTES:
1. About the indoor side electric wiring refer to the indoor unit electric wiring diagram for servicing.
2. Use copper conductors only (For field wiring).
3. Symbols below indicate.
: Terminal block
: Connector

NOTES:
1. À propos du câblage électrique de côté intérieur se référer à l'unité intérieure câblage schéma électrique pour l'entretien.
2. Utiliser des conducteurs en cuivre (Pour le câblage).
3. Symbole ci-dessous indique.
:Bornier
:Connecteur

SYMBOL	NAME	SYMBOL	NAME	SYMBOL	NAME	SYMBOL	NAME	SYMBOL	NAME
CB1~3	SMOOTHING CAPACITOR	IC401, 402	DIODE BRIDGE	LEV A, B, R	EXPANSION VALVE COIL	RT64	FIN TEMP. THERMISTOR	X52C	RELAY
D1	DIODE	IC411	POWER FACTOR CONTROLLER	MC	COMPRESSOR	RT65	AMBIENT TEMP. THERMISTOR	X65	RELAY
F1	FUSE (T6.3AL250V)	IC501	POWER MODULE	MF	FAN MOTOR	RT68	OUTDOOR HEAT EXCHANGER	X712	RELAY
F2	FUSE (T6.3AL250V)	IC801	POWER DEVICE	PTC1, 2	CIRCUIT PROTECTION		TEMPERATURE THERMISTOR	X714	RELAY
F711	FUSE (T3.15AL250V)	L	REACTOR	RT61	DEFROST THERMISTOR	T801	TRANSFORMER	21S4	REVERSING VALVE SOLENOID COIL
HPS	HIGH PRESSURE SWITCH	LED1~3	LED	RT62	DISCHARGE TEMP. THERMISTOR	TB1~3	TERMINAL BLOCK		

MXZ-3C24NA2
MXZ-3C30NA2

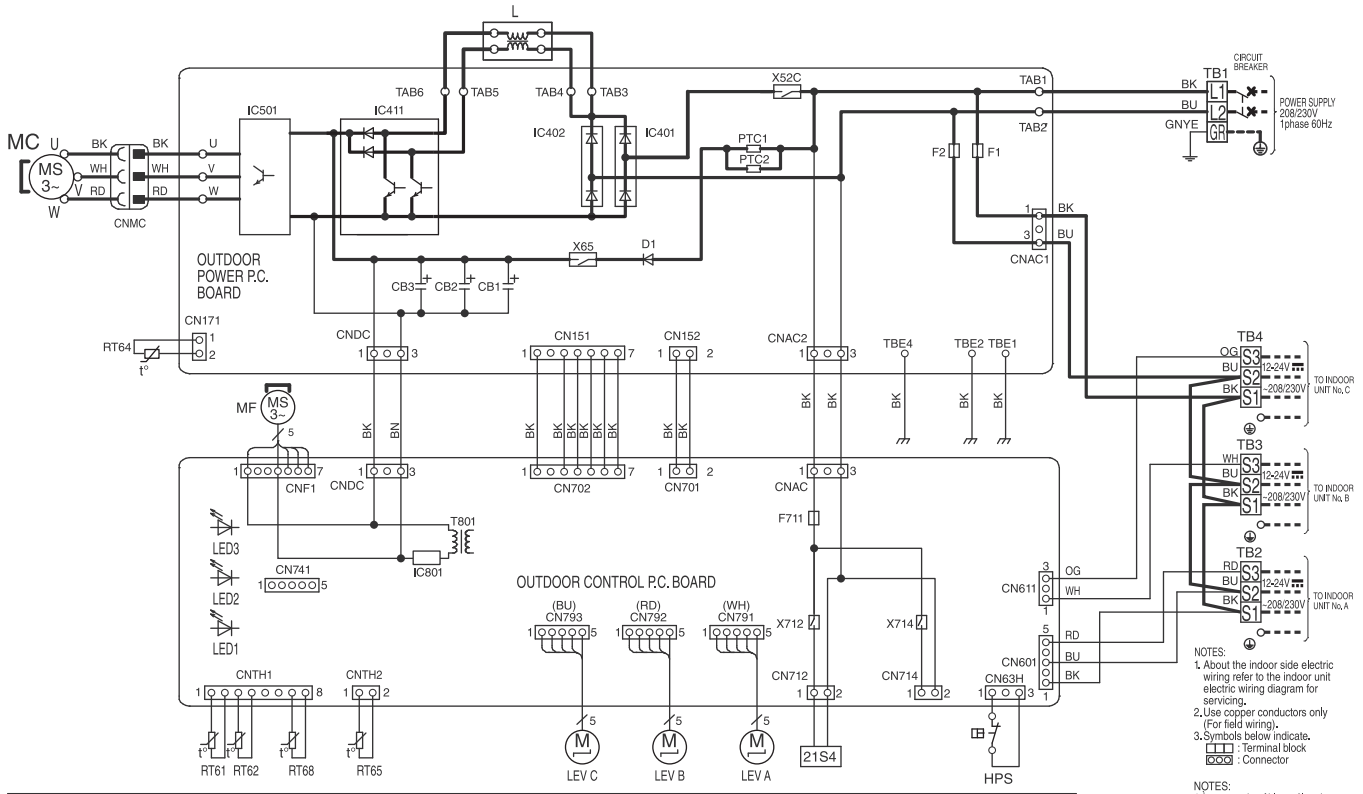

NOTES:
1. About the indoor side electric wiring refer to the indoor unit electric wiring diagram for servicing.
2. Use copper conductors only (For field wiring).
3. Symbols below indicate.
□□□ : Terminal block
⊂⊃⊂⊃ : Connector

NOTES:
1. A propos du câblage électrique de côté intérieur se référer à l'unité intérieure câblage schéma électrique pour l'entretien.
2. Utiliser des conducteurs en cuivre (Pour le câblage).
3. Symbole ci-dessous indique.
□□□ :Bornier
⊂⊃⊂⊃ :Connecteur

SYMBOL	NAME	SYMBOL	NAME	SYMBOL	NAME	SYMBOL	NAME	SYMBOL	NAME
CB1~3	SMOOTHING CAPACITOR	IC401, 402	DIODE BRIDGE	LEV A~C	EXPANSION VALVE COIL	RT64	FIN TEMP. THERMISTOR	X52C	RELAY
D1	DIODE	IC411	POWER FACTOR CONTROLLER	MC	COMPRESSOR	RT65	AMBIENT TEMP. THERMISTOR	X65	RELAY
F1	FUSE (T6.3AL 250V)	IC501	POWER MODULE	MF	FAN MOTOR	RT68	OUTDOOR HEAT EXCHANGER TEMPERATURE THERMISTOR	X712	RELAY
F2	FUSE (T6.3AL 250V)	IC801	POWER DEVICE	PTC1, 2	CIRCUIT PROTECTION			X714	RELAY
F711	FUSE (T3.15AL 250V)	L	REACTOR	RT61	DEFROST THERMISTOR	T801	TRANSFORMER	21S4	REVERSING VALVE SOLENOID COIL
HPS	HIGH PRESSURE SWITCH	LED1~3	LED	RT62	DISCHARGE TEMP. THERMISTOR	TB1~4	TERMINAL BLOCK		

MXZ-4C36NA2

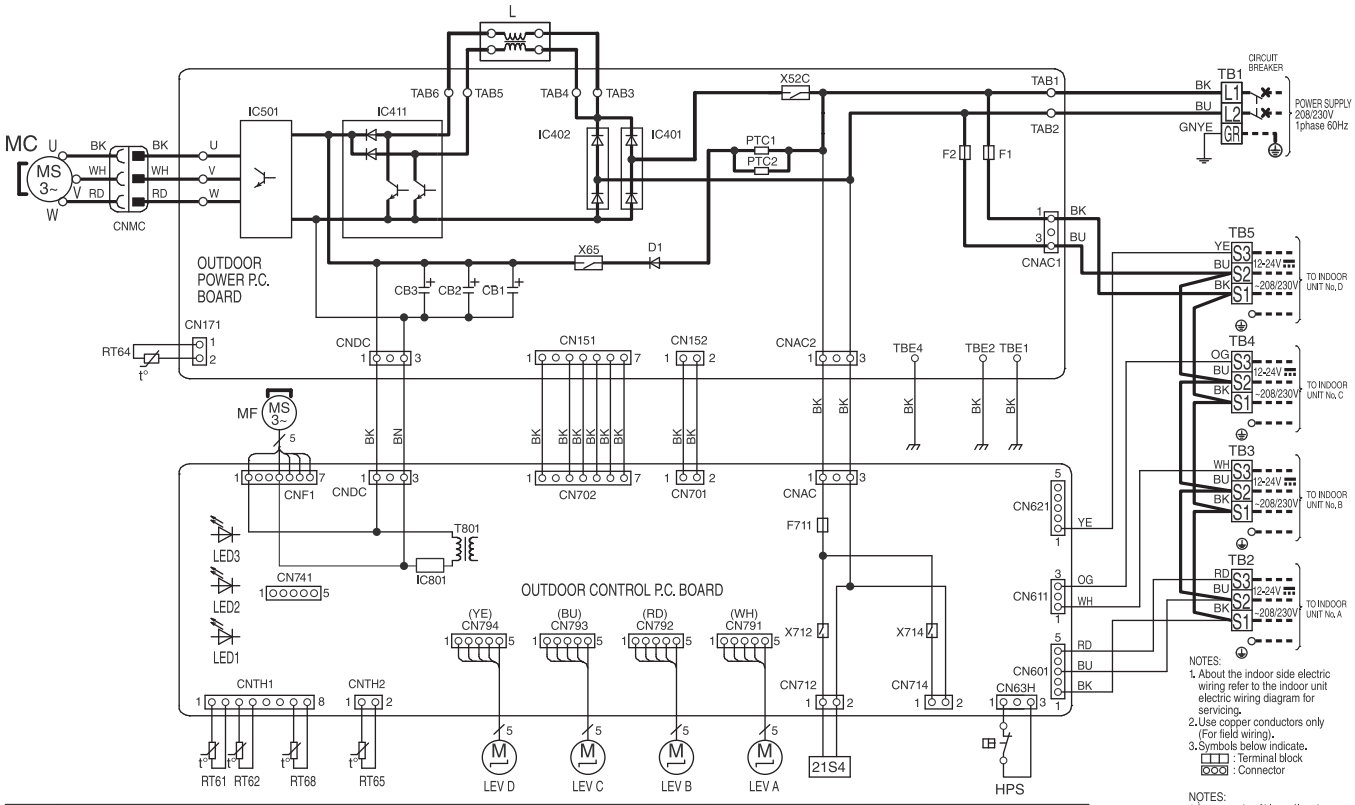

SYMBOL	NAME	SYMBOL	NAME	SYMBOL	NAME	SYMBOL	NAME	SYMBOL	NAME
CB1~3	SMOOTHING CAPACITOR	IC401, 402	DIODE BRIDGE	LEV A~D	EXPANSION VALVE COIL	RT64	FIN TEMP. THERMISTOR	X52C	RELAY
D1	DIODE	IC411	POWER FACTOR CONTROLLER	MC	COMPRESSOR	RT65	AMBIENT TEMP. THERMISTOR	X65	RELAY
F1	FUSE (T6.3AL 250V)	IC501	POWER MODULE	MF	FAN MOTOR	RT68	OUTDOOR HEAT EXCHANGER	X712	RELAY
F2	FUSE (T6.3AL 250V)	IC801	POWER DEVICE	PTC1, 2	CIRCUIT PROTECTION		TEMPERATURE THERMISTOR	X714	RELAY
F711	FUSE (T3.15AL 250V)	L	REACTOR	RT61	DEFROST THERMISTOR	T801	TRANSFORMER	21S4	REVERSING VALVE SOLENOID COIL
HPS	HIGH PRESSURE SWITCH	LED1~3	LED	RT62	DISCHARGE TEMP. THERMISTOR	TB1~5	TERMINAL BLOCK		

MXZ-5C42NA2

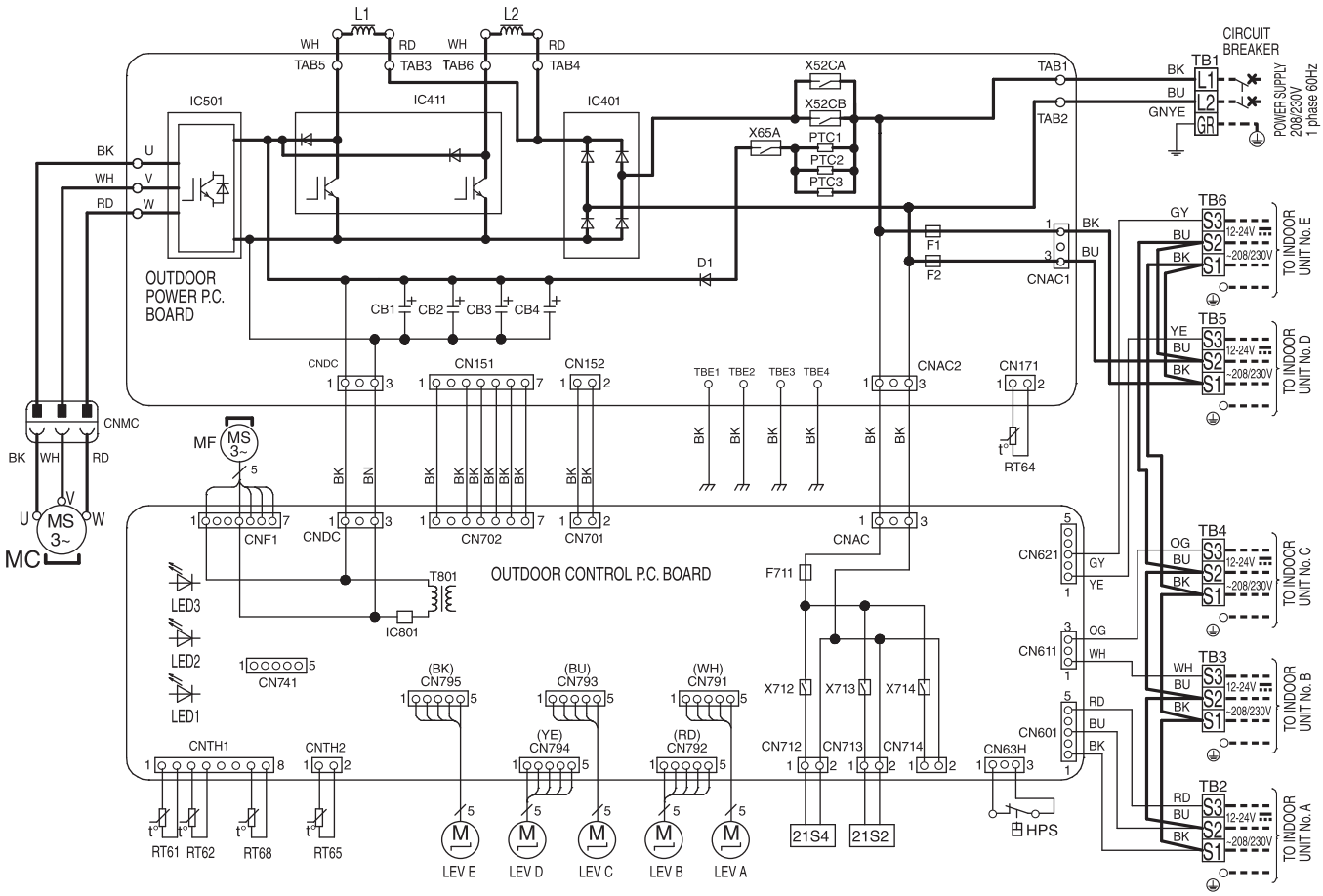

SYMBOL	NAME	SYMBOL	NAME
CB1~4	SMOOTHING CAPACITOR	RT62	DISCHARGE TEMP. THERMISTOR
D1	DIODE	RT64	FIN TEMP. THERMISTOR
F1, F2	FUSE (T6.3AL 250V)	RT65	AMBIENT TEMP. THERMISTOR
F711	FUSE (T3.15AL 250V)	RT68	OUTDOOR HEAT EXCHANGER TEMPERATURE THERMISTOR
HPS	HIGH PRESSURE SWITCH		
IC401	DIODE BRIDGE	T801	TRANSFORMER
IC411	POWER MODULE	TB1~6	TERMINAL BLOCK
IC501	POWER MODULE	X52CA, B	RELAY
IC801	POWER DEVICE	X65A	RELAY
L1, L2	REACTOR	X712	RELAY
LED 1~3	LED	X713	RELAY
LEV A~E	EXPANSION VALVE COIL	X714	RELAY
MC	COMPRESSOR	21S2	2WAY VALVE SOLENOID COIL
MF	FAN MOTOR	21S4	REVERSING VALVE SOLENOID COIL
PTC1~3	CIRCUIT PROTECTION		
RT61	DEFROST THERMISTOR		

NOTES:
1. About the indoor side electric wiring refer to the indoor unit electric wiring diagram for servicing.
2. Use copper conductors only (For field wiring).
3. Symbols below indicate.
   : Terminal block
   : Connector

NOTES:
1. À propos du câblage électrique de côté intérieur se référer à l'unité intérieure câblage schéma électrique pour l'entretien.
2. Utiliser des conducteurs en cuivre (pour le câblage).
3. Symbole ci-dessous indique.
   : Bornier
   : Connecteur

MXZ-2C20NAHZ2

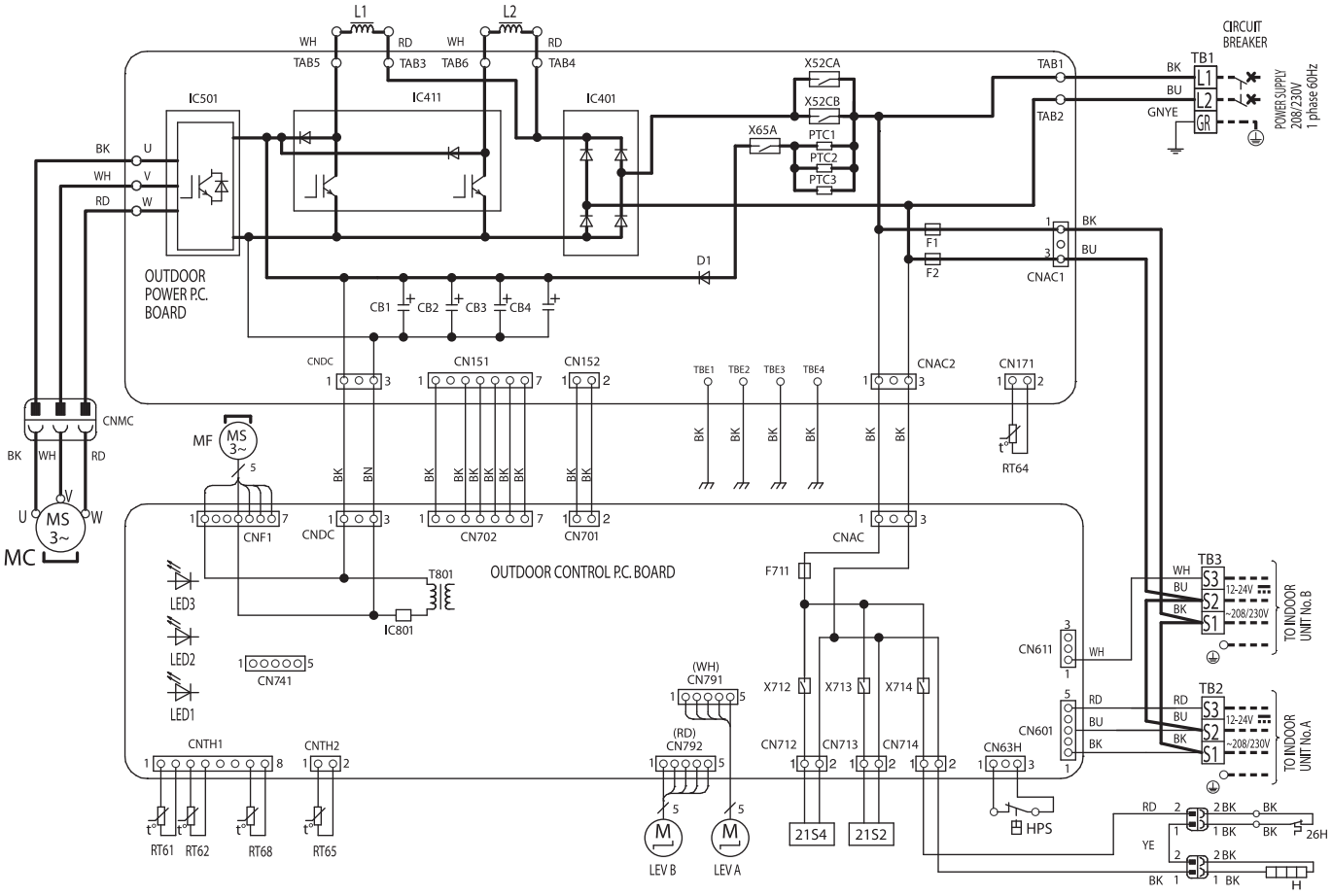

SYMBOL	NAME	SYMBOL	NAME
CB1~4	SMOOTHING CAPACITOR	RT61	DEFROST THERMISTOR
D1	DIODE	RT62	DISCHARGE TEMP.THERMISTOR
F1, F2	FUSE (T6.3AL 250V)	RT64	FIN TEMP.THERMISTOR
F711	FUSE (T3.15AL 250V)	RT65	AMBIENT TEMP.THERMISTOR
HPS	HIGH PRESSURE SWITCH	RT 68	OUTDOOR HEAT EXCHANGER TEMPERATURE THERMISTOR
H	DEFROST HEATER		
IC401	DIODE BRIDGE	T801	TRANSFORMER
IC411	POWER MODULE	TB1~3	TERMINAL BLOCK
IC501	POWER MODULE	X52CA, B	RELAY
IC801	POWER DEVICE	X65A	RELAY
L1, L2	REACTOR	X712	RELAY
LED 1~3	LED	X713	RELAY
LEV A, B	EXPANSION VALVE COIL	X714	RELAY
MC	COMPRESSOR	21S2	2WAY VALVE SOLENOID COIL
MF	FAN MOTOR	21S4	REVERSING VALVE SOLENOID COIL
PTC1~3	CIRCUIT PROTECTION	26H	HEATER PROTECTOR

NOTES:
1. About the indoor side electric wiring refer to the indoor unit electric wiring diagram for servicing.
2. Use copper conductors only (For field wiring).
3. Symbols below indicate.
   ☐☐☐ : Terminal block
   ⊙⊙⊙ : Connector

NOTES:
1. À propos du câblage électrique de côté intérieur se référer à l'unité intérieure câblage schéma électrique pour l'entretien.
2. Utiliser des conducteurs en cuivre (pour le câblage).
3. Symbole ci-dessous indique.
   ☐☐☐ : Bornier
   ⊙⊙⊙ : Connecteur

MXZ-3C24NAHZ2
MXZ-3C30NAHZ2

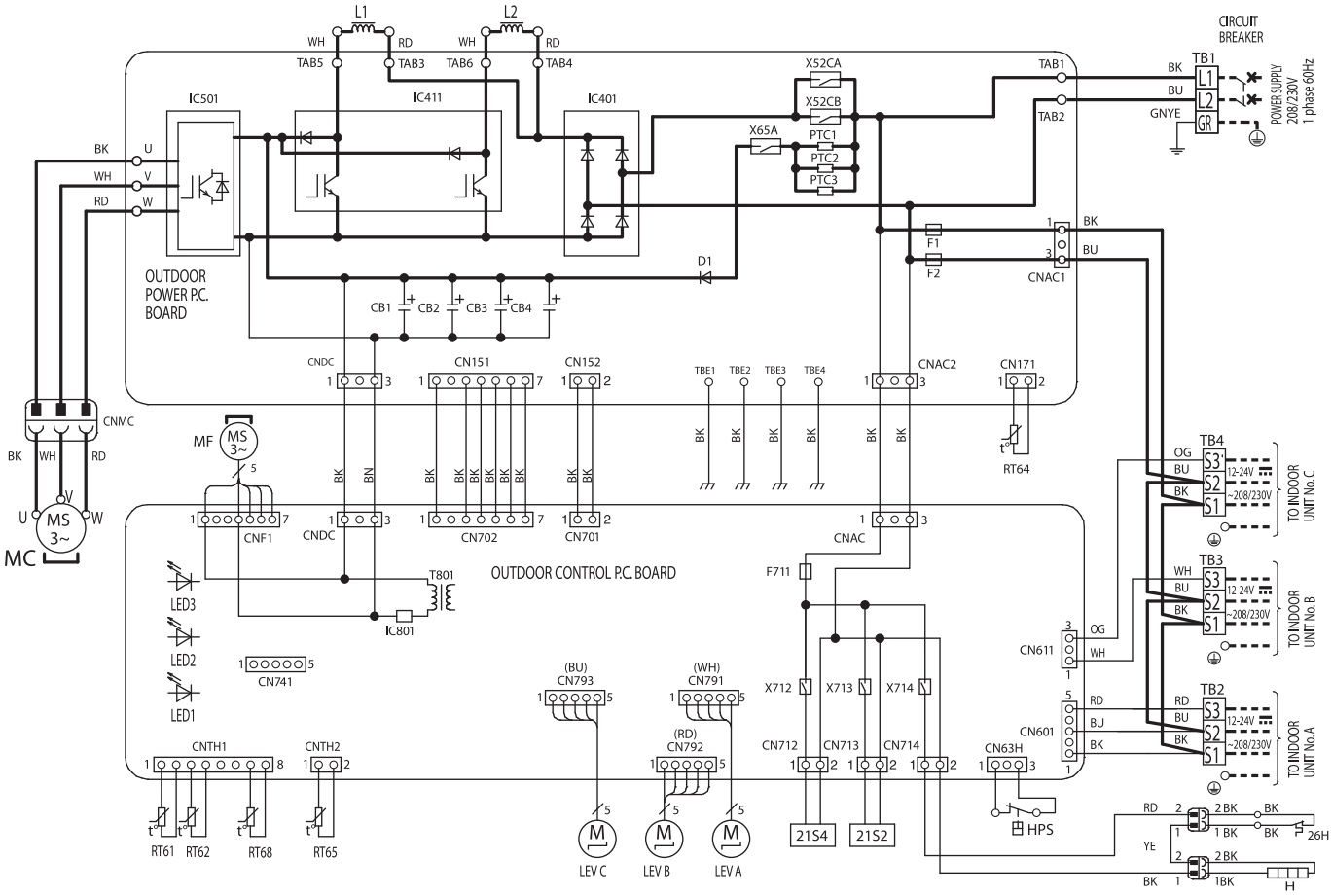

SYMBOL	NAME	SYMBOL	NAME
CB1~4	SMOOTHING CAPACITOR	RT61	DEFROST THERMISTOR
D1	DIODE	RT62	DISCHARGE TEMP.THERMISTOR
F1, F2	FUSE (T6.3AL 250V)	RT64	FIN TEMP.THERMISTOR
F711	FUSE (T3.15AL 250V)	RT65	AMBIENT TEMP.THERMISTOR
HPS	HIGH PRESSURE SWITCH	RT68	OUTDOOR HEAT EXCHANGER TEMPERATURE THERMISTOR
H	DEFROST HEATER		
IC401	DIODE BRIDGE	T801	TRANSFORMER
IC411	POWER MODULE	TB1~4	TERMINAL BLOCK
IC501	POWER MODULE	X52CA, B	RELAY
IC801	POWER DEVICE	X65A	RELAY
L1, L2	REACTOR	X712	RELAY
LED 1~3	LED	X713	RELAY
LEV A~C	EXPANSION VALVE COIL	X714	RELAY
MC	COMPRESSOR	21S2	2WAY VALVE SOLENOID COIL
MF	FAN MOTOR	21S4	REVERSING VALVE SOLENOID COIL
PTC1~3	CIRCUIT PROTECTION	26H	HEATER PROTECTOR

NOTES:
1. About the indoor side electric wiring refer to the indoor unit electric wiring diagram for servicing.
2. Use copper conductors only (For field wiring).
3. Symbols below indicate.
   ☐☐☐ : Terminal block
   ◎◎◎ : Connector

NOTES:
1. À propos du câblage électrique de côté intérieur se référer à l'unité intérieure câblage schéma électrique pour l'entretien.
2. Utiliser des conducteurs en cuivre (pour le câblage).
3. Symbole ci-dessous indique.
   ☐☐☐ : Bornier
   ◎◎◎ : Connecteur

6 REFRIGERANT SYSTEM DIAGRAM

6-1. OUTDOOR UNIT

Unit: inch (mm)

MXZ-2C20NA2

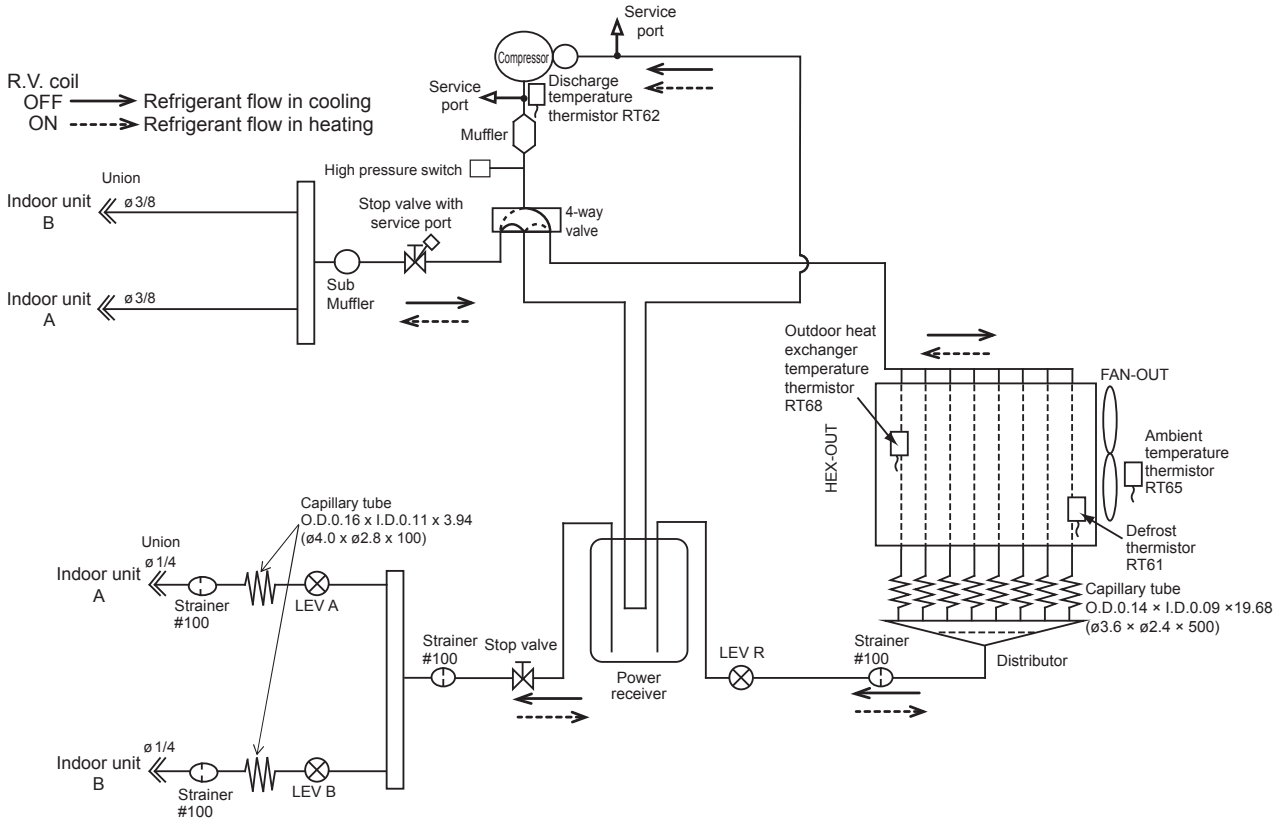

MXZ-3C24NA2 MXZ-3C30NA2

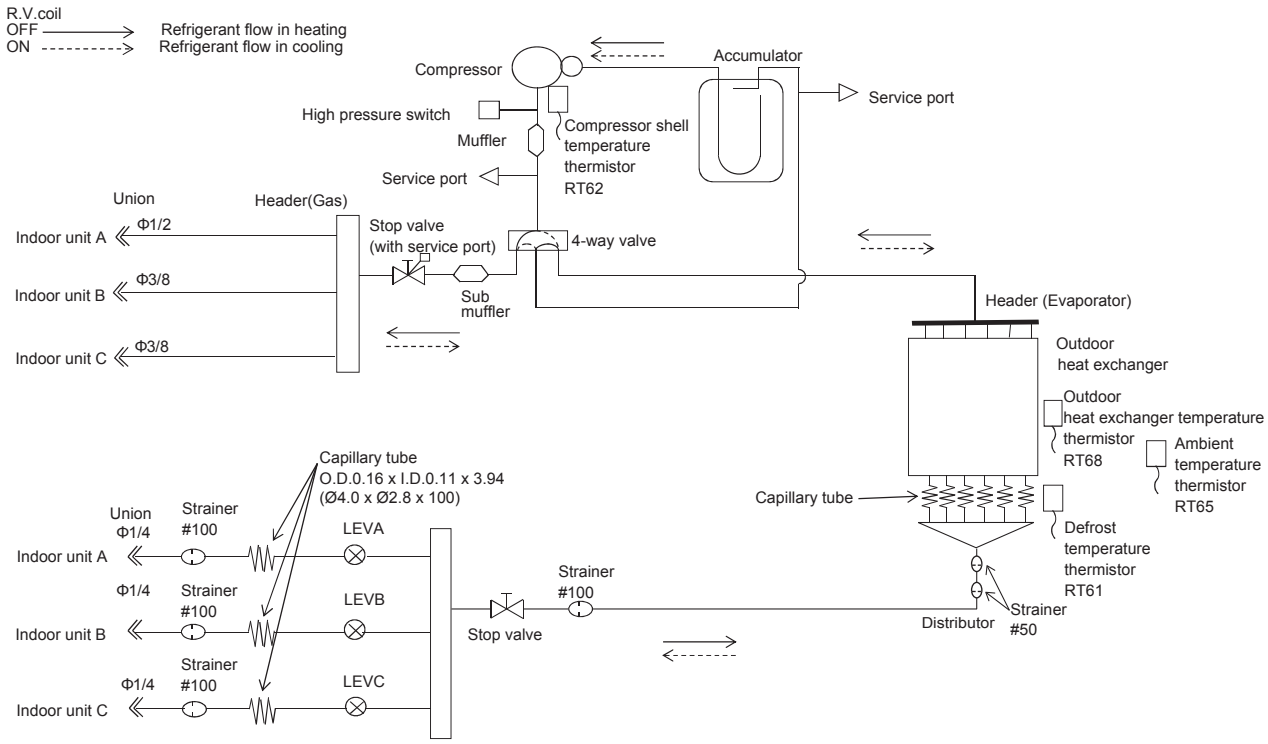

MXZ-4C36NA2

Unit: inch (mm)

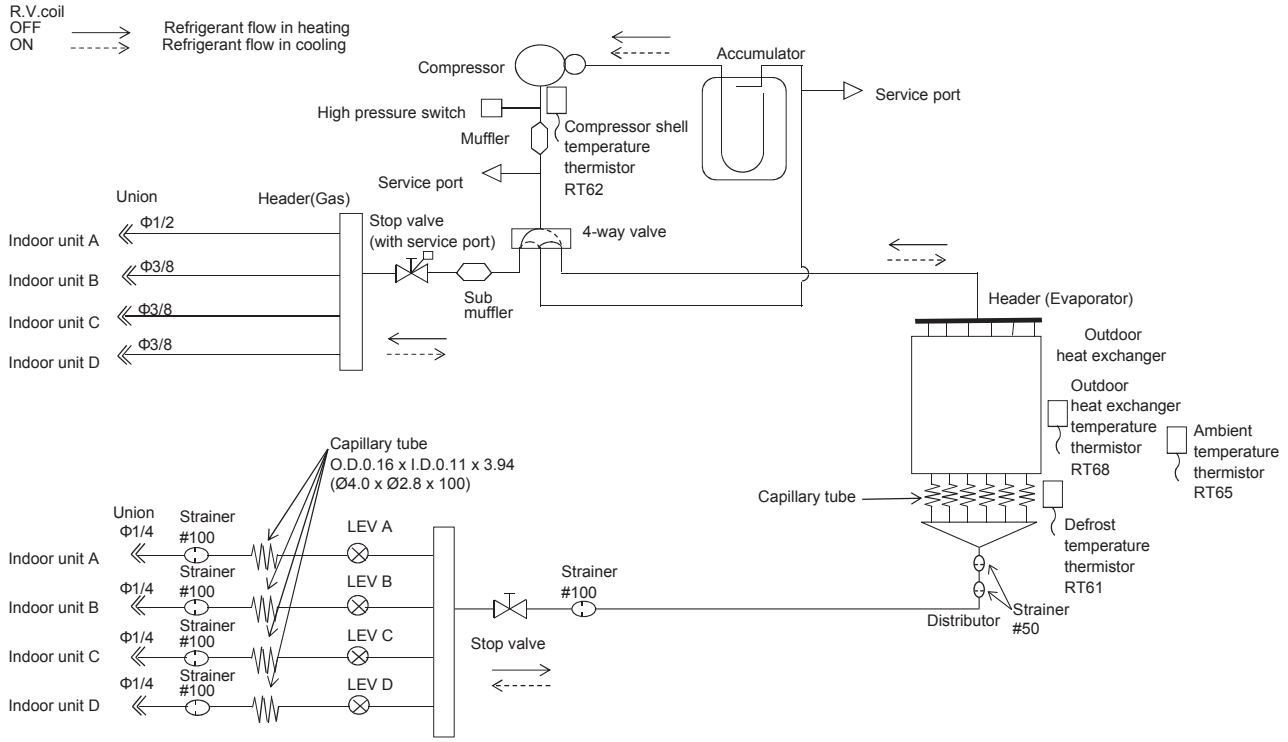

MXZ-5C42NA2

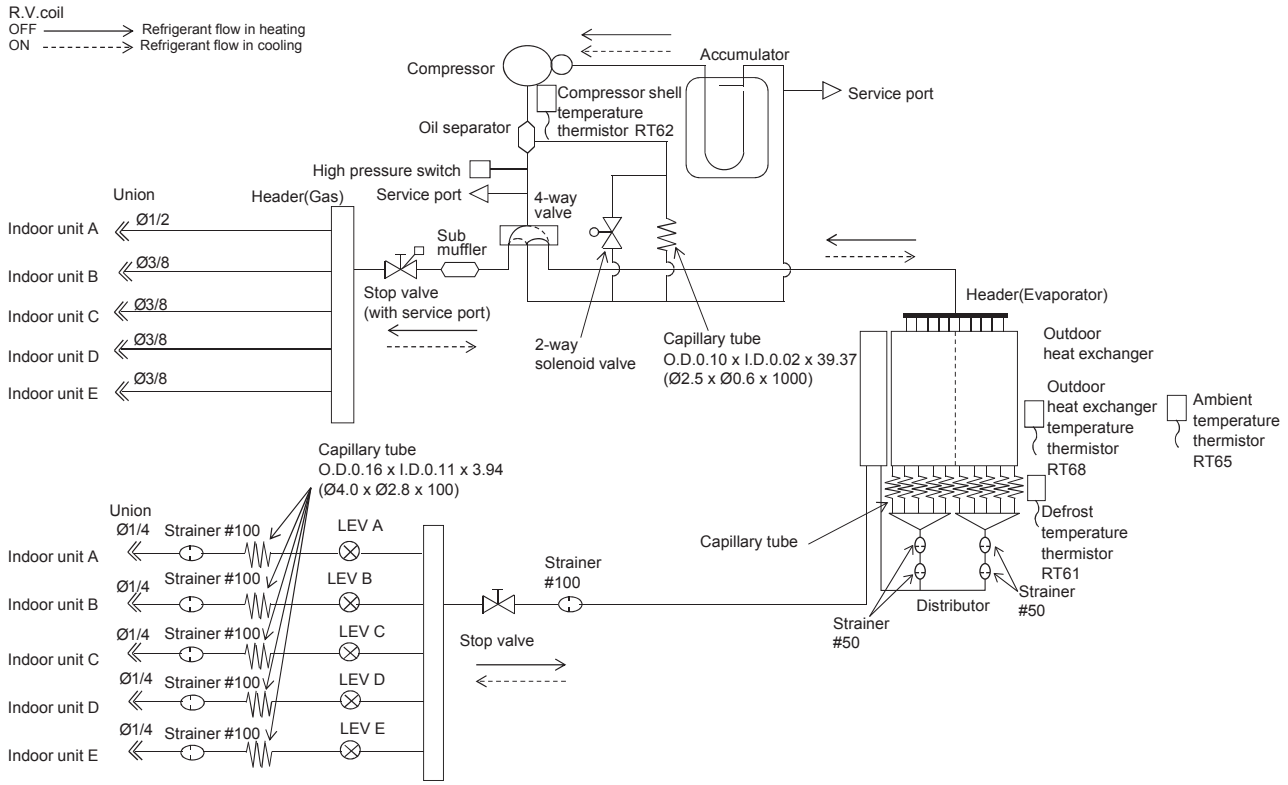

MXZ-2C20NAHZ2

Unit: inch (mm)

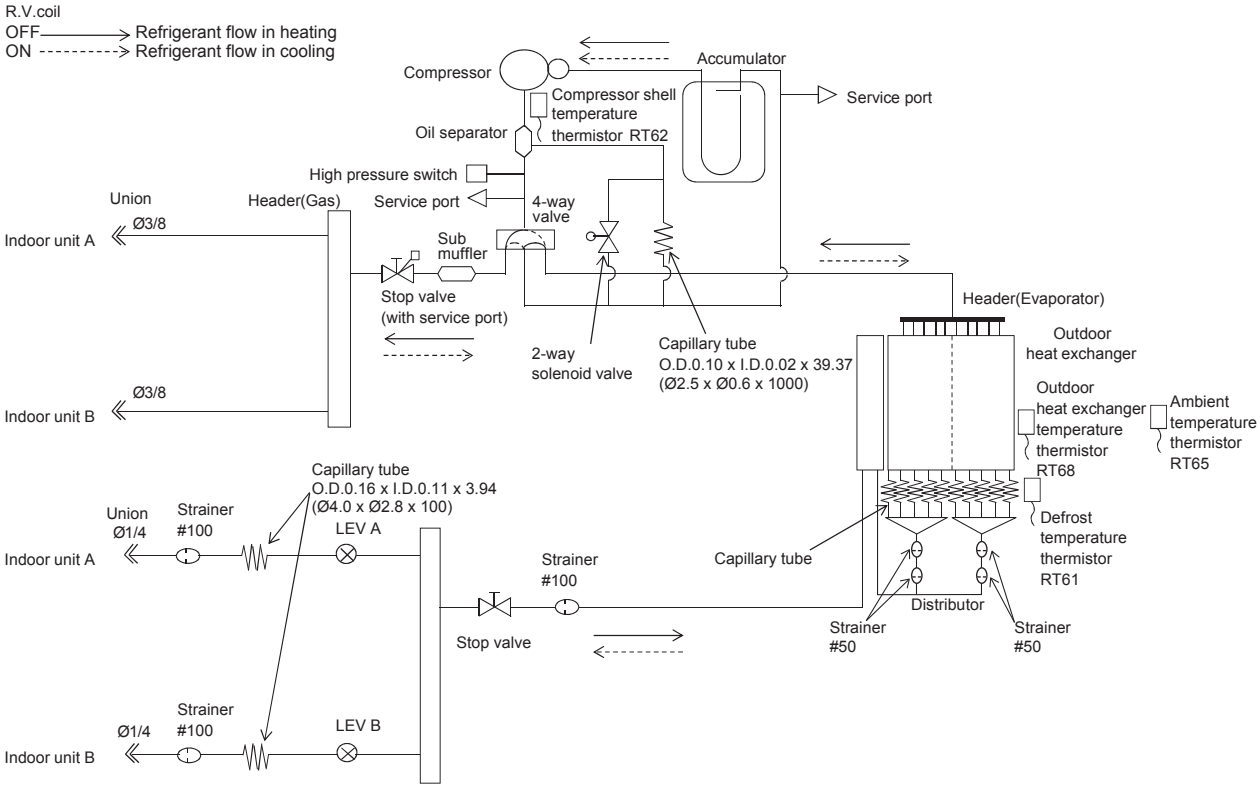

MXZ-3C24NAHZ2
MXZ-3C30NAHZ2

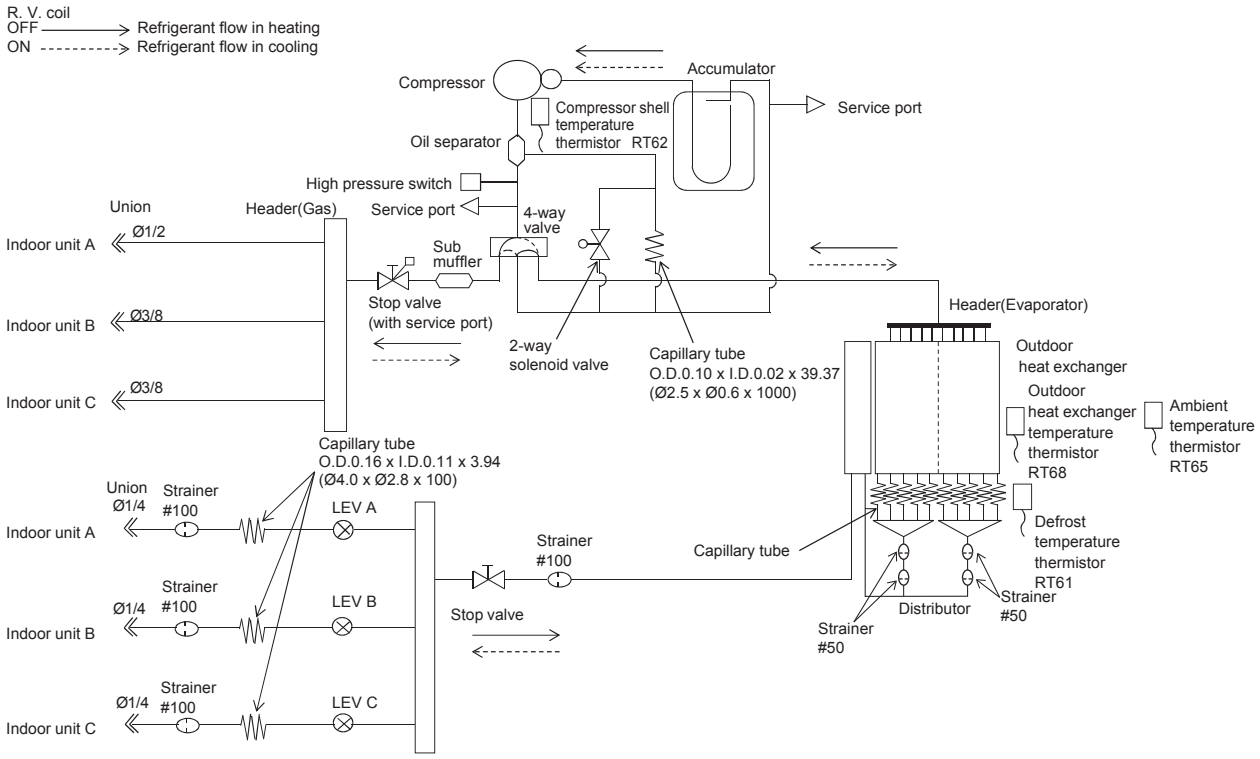

MXZ-2C20NA2

Operating Range

		Indoor intake air temperature	Outdoor intake air temperature
Cooling	Maximum	95°FDB, 71°FWB	115°FDB
	Minimum	67°FDB, 57°FWB	14°FDB
Heating	Maximum	80°FDB, 67°FWB	75°FDB, 65°FWB
	Minimum	70°FDB, 60°FWB	6°FDB, 5°FWB

MAX. REFRIGERANT PIPING LENGTH & PIPE SIZE SELECTION

Piping length each indoor unit (a, b)	82 ft. MAX.
Total piping length (a+b)	164 ft. MAX.
Bending point for each unit	25 MAX.
Total bending point	50 MAX.

※It is irrelevant which unit is higher.

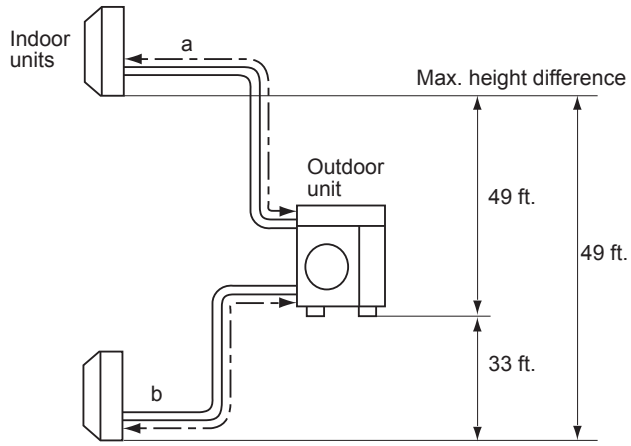

- Refrigerant pipe diameter is different according to indoor unit to be connected. When using extension pipes, refer to the tables below.
- When the diameter of refrigerant pipe is different from that of outdoor unit union, use optional Different-diameter pipe.

Unit: inch

Outdoor unit union diameter		
For		
Indoor unit A	Liquid	1/4
	Gas	3/8
Indoor unit B	Liquid	1/4
	Gas	3/8

MXZ-3C24NA2 MXZ-3C30NA2
Operating Range

		Indoor intake air temperature	Outdoor intake air temperature
Cooling	Maximum	95°FDB, 71°FWB	115°FDB
	Minimum	67°FDB, 57°FWB	14°FDB
Heating	Maximum	80°FDB, 67°FWB	75°FDB, 65°FWB
	Minimum	70°FDB, 60°FWB	6°FDB, 5°FWB

MAX. REFRIGERANT PIPING LENGTH & PIPE SIZE SELECTION

Piping length each indoor unit (a, b, c)	82 ft. MAX.
Total piping length (a+b+c)	230 ft. MAX.
Bending point for each unit	25 MAX.
Total bending point	70 MAX.

※It is irrelevant which unit is higher.

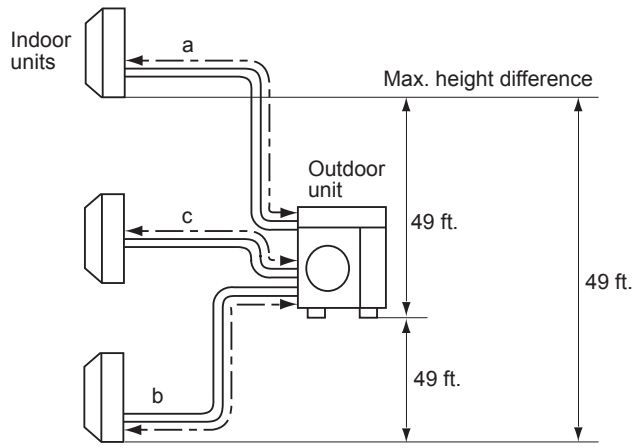

- Refrigerant pipe diameter is different according to indoor unit to be connected. When using extension pipes, refer to the tables below.
- When the diameter of refrigerant pipe is different from that of outdoor unit union, use optional Different-diameter pipe.

Unit : inch

Outdoor unit union diameter		
For		
Indoor unit A	Liquid	1/4
	Gas	1/2
Indoor unit B	Liquid	1/4
	Gas	3/8
Indoor unit C	Liquid	1/4
	Gas	3/8

MXZ-4C36NA2
Operating Range

		Indoor intake air temperature	Outdoor intake air temperature
Cooling	Maximum	95°FDB, 71°FWB	115°FDB
	Minimum	67°FDB, 57°FWB	14°FDB
Heating	Maximum	80°FDB, 67°FWB	75°FDB, 65°FWB
	Minimum	70°FDB, 60°FWB	6°FDB, 5°FWB

MAX. REFRIGERANT PIPING LENGTH & PIPE SIZE SELECTION

Piping length each indoor unit (a, b, c, d)	82 ft. MAX.
Total piping length (a+b+c+d)	230 ft. MAX.
Bending point for each unit	25 MAX.
Total bending point	70 MAX.

⁕It is irrelevant which unit is higher.

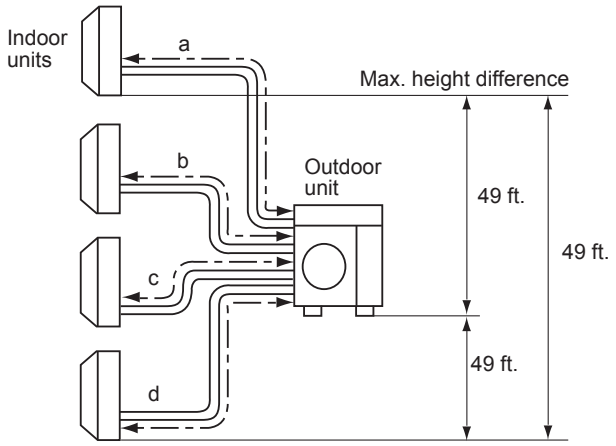

- Refrigerant pipe diameter is different according to indoor unit to be connected. When using extension pipes, refer to the tables below.
- When the diameter of refrigerant pipe is different from that of outdoor unit union, use optional Different-diameter pipe.

Unit : inch

Outdoor unit union diameter		
For		
Indoor unit A	Liquid	1/4
	Gas	1/2
Indoor unit B	Liquid	1/4
	Gas	3/8
Indoor unit C	Liquid	1/4
	Gas	3/8
Indoor unit D	Liquid	1/4
	Gas	3/8

MXZ-5C42NA2
Operating Range

		Indoor intake air temperature	Outdoor intake air temperature
Cooling	Maximum	95°FDB, 71°FWB	115°FDB
	Minimum	67°FDB, 57°FWB	14°FDB
Heating	Maximum	80°FDB, 67°FWB	75°FDB, 65°FWB
	Minimum	70°FDB, 60°FWB	6°FDB, 5°FWB

MAX. REFRIGERANT PIPING LENGTH & PIPE SIZE SELECTION

Piping length each indoor unit (a, b, c, d, e)	82 ft. MAX.
Total piping length (a+b+c+d+e)	262 ft. MAX.
Bending point for each unit	25 MAX.
Total bending point	80 MAX.

⁕It is irrelevant which unit is higher.

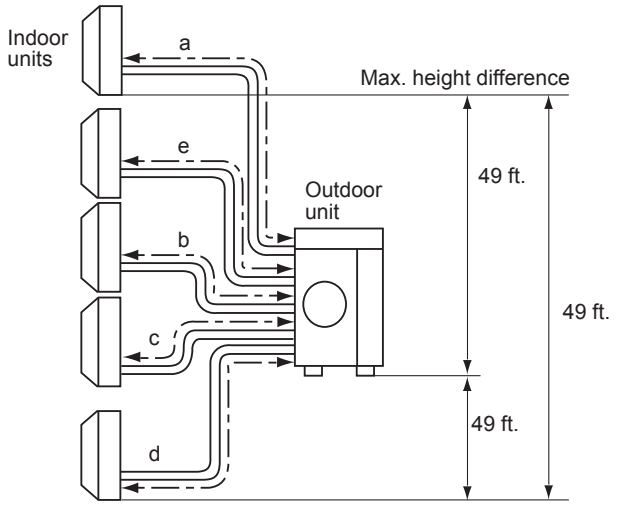

- Refrigerant pipe diameter is different according to indoor unit to be connected. When using extension pipes, refer to the tables below.
- When diameter of refrigerant pipe is different from that of outdoor unit union, use optional Different-diameter pipe.

Unit : inch

Outdoor unit union diameter		
For		
Indoor unit A	Liquid	1/4
	Gas	1/2
Indoor unit B	Liquid	1/4
	Gas	3/8
Indoor unit C	Liquid	1/4
	Gas	3/8
Indoor unit D	Liquid	1/4
	Gas	3/8
Indoor unit E	Liquid	1/4
	Gas	3/8

MXZ-2C20NAHZ2
Operating Range

		Indoor intake air temperature	Outdoor intake air temperature
Cooling	Maximum	95°FDB, 71°FWB	115°FDB
	Minimum	67°FDB, 57°FWB	14°FDB
Heating	Maximum	80°FDB, 67°FWB	75°FDB, 65°FWB
	Minimum	70°FDB, 60°FWB	-12°FDB, -13°FWB

MAX. REFRIGERANT PIPING LENGTH & PIPE SIZE SELECTION

Piping length each indoor unit (a, b)	82 ft. MAX.
Total piping length (a+b)	164 ft. MAX.
Bending point for each unit	25 MAX.
Total bending point	50 MAX.

⁕It is irrelevant which unit is higher.

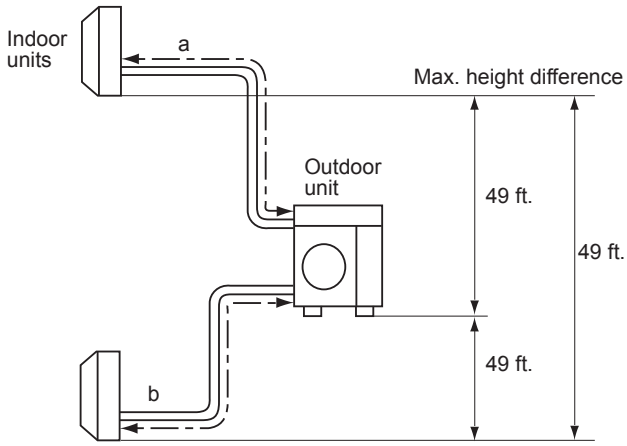

- Refrigerant pipe diameter is different according to indoor unit to be connected. When using extension pipes, refer to the tables below.
- When the diameter of refrigerant pipe is different from that of outdoor unit union, use optional Different-diameter pipe.

Unit: inch

Outdoor unit union diameter		
For		
Indoor unit A	Liquid	1/4
	Gas	3/8
Indoor unit B	Liquid	1/4
	Gas	3/8

MXZ-3C24NAHZ2 MXZ-3C30NAHZ2
Operating Range

		Indoor intake air temperature	Outdoor intake air temperature
Cooling	Maximum	95°FDB, 71°FWB	115°FDB
	Minimum	67°FDB, 57°FWB	14°FDB
Heating	Maximum	80°FDB, 67°FWB	75°FDB, 65°FWB
	Minimum	70°FDB, 60°FWB	-12°FDB, -13°FWB

MAX. REFRIGERANT PIPING LENGTH & PIPE SIZE SELECTION

Piping length each indoor unit (a, b, c)	82 ft. MAX.
Total piping length (a+b+c)	230 ft. MAX.
Bending point for each unit	25 MAX.
Total bending point	70 MAX.

⁕It is irrelevant which unit is higher.

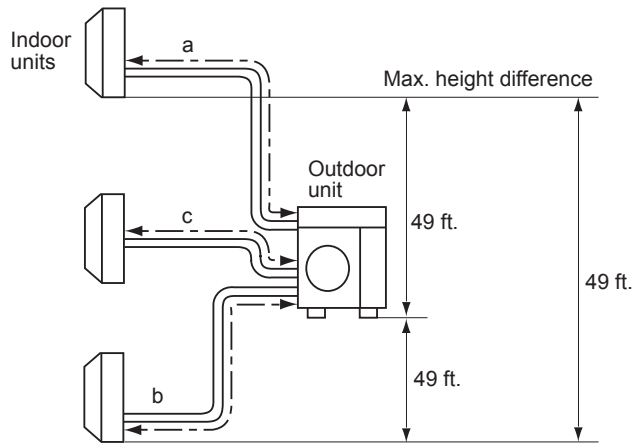

- Refrigerant pipe diameter is different according to indoor unit to be connected. When using extension pipes, refer to the tables below.
- When the diameter of refrigerant pipe is different from that of outdoor unit union, use optional Different-diameter pipe.

Unit : inch

Outdoor unit union diameter		
For		
Indoor unit A	Liquid	1/4
	Gas	1/2
Indoor unit B	Liquid	1/4
	Gas	3/8
Indoor unit C	Liquid	1/4
	Gas	3/8

8-1. STANDARD OPERATION DATA

Model				MXZ-2C20NA2			
Indoor type				Non-Duct (09+09)		Duct (09+12)	
Item			Unit	Cooling	Heating	Cooling	Heating
Total	Capacity		Btu/h	18,000	22,000	20,000	22,000
	SHF		–	–	–	–	–
	Input		kW	1.417	1.641	2.000	1.771
Electrical circuit	Power supply (V, phase, Hz)			208/230, 1, 60			
	Input		kW	1.373	1.597	1.880	1.691
	Comp. current (208/230V)		A	6.82/6.17	8.03/7.26	9.61/8.69	8.55/7.73
	Fan motor current		A	0.2	0.2	0.2	0.2
Refrigerant circuit	Condensing pressure		PSIG	396	328	419	351
	Suction pressure		PSIG	146	94	130	100
	Discharge temperature		ºF	174	165	170	168
	Condensing temperature		ºF	116	100	160	101
	Suction temperature		ºF	74	47	55	49
	Comp. shell bottom temp.		ºF	173	163	160	157
	Ref. pipe length [Total pipe length for multi-system]		ft	25 [50]			
	Refrigerant charge (R410A)		–	5 lb. 15 oz.			
Outdoor unit	Intake air temperature	DB	ºF	95	47	95	47
		WB	ºF	–	43	–	43
	Fan speed		rpm	650	700	650	700
	Airflow		CFM	1,342	1,458	1,342	1,458

Model				MXZ-3C24NA2			
Indoor type				Non-Duct (06+06+09)		Duct (09+09+09)	
Item			Unit	Cooling	Heating	Cooling	Heating
Total	Capacity		Btu/h	22,000	25,000	23,600	24,600
	SHF		–	–	–	–	–
	Input		kW	1.62	1.75	2.10	1.90
Electrical circuit	Power supply (V, phase, Hz)			208/230, 1, 60			
	Input		kW	1.554	1.684	1.920	1.780
	Comp. current (208/230V)		A	7.47 / 6.76	8.1 / 7.32	9.23 / 8.35	8.56 / 7.74
	Fan motor current		A	0.3	0.3	0.3	0.3
Refrigerant circuit	Condensing pressure		PSIG	395	310	419	345
	Suction pressure		PSIG	162	101	138	102
	Discharge temperature		ºF	143	137	155	141
	Condensing temperature		ºF	116	98	120	106
	Suction temperature		ºF	59	36	50	34
	Comp. shell bottom temp.		ºF	137	128	146	131
	Ref. pipe length [Total pipe length for multi-system]		ft	25[75]			
	Refrigerant charge (R410A)		–	6lb. 13oz.			
Outdoor unit	Intake air temperature	DB	ºF	95	47	95	47
		WB	ºF	-	43	-	43
	Fan speed		rpm	720	750	720	750
	Airflow		CFM	2,287	2,382	2,287	2,382

Model				MXZ-3C30NA2			
Indoor type				Non-Duct (09+09+12)		Duct (09+09+12)	
Item			Unit	Cooling	Heating	Cooling	Heating
Total	Capacity		Btu/h	28,400	28,600	27,400	27,600
	SHF		–	–	–	–	–
	Input		kW	2.68	2.15	2.84	2.22
Electrical circuit	Power supply (V, phase, Hz)			208/230, 1, 60			
	Input		kW	2.614	2.084	2.650	2.090
	Comp. current (208/230V)		A	12.57 / 11.37	10.02 / 9.06	12.74 / 11.52	10.05 / 9.09
	Fan motor current		A	0.3	0.3	0.3	0.3
Refrigerant circuit	Condensing pressure		PSIG	432	323	439	323
	Suction pressure		PSIG	137	97	132	99
	Discharge temperature		ºF	159	136	165	136
	Condensing temperature		ºF	122	101	124	101
	Suction temperature		ºF	49	32	47	32
	Comp. shell bottom temp.		ºF	145	121	156	128
	Ref. pipe length [Total pipe length for multi-system]		ft	25[75]			
	Refrigerant charge (R410A)		–	6 lb.13 oz.			
Outdoor unit	Intake air temperature	DB	ºF	95	47	95	47
		WB	ºF	-	43	-	43
	Fan speed		rpm	720	750	720	750
	Airflow		CFM	2,287	2,382	2,287	2,382

Model				MXZ-4C36NA2			
Indoor type				Non-Duct (09+09+09+09)		Duct (09+09+09+09)	
Item			Unit	Cooling	Heating	Cooling	Heating
Total	Capacity		Btu/h	35,400	36,000	34,400	34,400
	SHF		–	–	–	–	–
	Input		kW	3.76	3.02	3.94	3.10
Electrical circuit	Power supply (V, phase, Hz)			208/230, 1, 60			
	Input		kW	3.672	2.932	3.700	2.940
	Comp. current (208/230V)		A	17.65 / 15.97	14.1 / 12.75	17.79 / 16.09	14.13 / 12.78
	Fan motor current		A	0.3	0.3	0.3	0.3
Refrigerant circuit	Condensing pressure		PSIG	461	297	470	334
	Suction pressure		PSIG	141	89	129	91
	Discharge temperature		ºF	172	138	176	147
	Condensing temperature		ºF	127	95	129	103
	Suction temperature		ºF	51	28	46	29
	Comp. shell bottom temp.		ºF	162	130	165	139
	Ref. pipe length [Total pipe length for multi-system]		ft	25[100]			
	Refrigerant charge (R410A)		–	6 lb.13 oz.			
Outdoor unit	Intake air temperature	DB	ºF	95	47	95	47
		WB	ºF	-	43	-	43
	Fan speed		rpm	720	750	720	750
	Airflow		CFM	2,287	2,382	2,287	2,382

Model				MXZ-5C42NA2			
Indoor type				Non-Duct (06+09+09+09+09)		Duct (09+09+09+09+09)	
Item			Unit	Cooling	Heating	Cooling	Heating
Total	Capacity		Btu/h	40,500	45,000	37,500	41,000
	SHF		-	-	-	-	-
	Input		kW	4.41	3.58	4.12	3.47
Electrical circuit	Power supply (V, phase, Hz)			208/230, 1, 60			
	Input		kW	4.300	3.465	3.870	3.270
	Comp. current (208/230V)		A	20.67/18.7	16.66/15.07	18.61/16.83	15.72/14.22
	Fan motor current		A	0.43/0.39	0.43/0.39	0.43/0.39	0.43/0.39
Refrigerant circuit	Condensing pressure		PSIG	466	305	446	326
	Suction pressure		PSIG	153	93	137	98
	Discharge temperature		ºF	172	155	165	143
	Condensing temperature		ºF	127	97	124	102
	Suction temperature		ºF	53	27	47	29
	Comp. shell bottom temp.		ºF	156	138	145	121
	Ref. pipe length [Total pipe length for multi-system]		ft	25 [80]			
	Refrigerant charge (R410A)		-	8 lb. 13 oz.			
Outdoor unit	Intake air temperature	DB	ºF	95	47	95	47
		WB	ºF	-	43	-	43
	Fan speed		rpm	630	730	630	730
	Airflow		CFM	2,118	2,542	2,118	2,542

Model				MXZ-2C20NAHZ2			
Indoor type				Non-Duct (09+09)		Duct (09+12)	
Item			Unit	Cooling	Heating	Cooling	Heating
Total	Capacity		Btu/h	18,000	22,000	20,000	22,000
	SHF		-	-	-	-	-
	Input		kW	1.34	1.62	1.82	1.75
Electrical circuit	Power supply (V, phase, Hz)			208/230, 1, 60			
	Input		kW	1.296	1.574	1.670	1.660
	Comp. current (208/230V)		A	6.23/5.63	7.57/6.84	8.03/7.26	7.98/7.22
	Fan motor current		A	0.43/0.39	0.43/0.39	0.43/0.39	0.43/0.39
Refrigerant circuit	Condensing pressure		PSIG	406	341	406	334
	Suction pressure		PSIG	154	110	133	113
	Discharge temperature		ºF	158	131	148	141
	Condensing temperature		ºF	108	105	112	103
	Suction temperature		ºF	60	37	46	37
	Comp. shell bottom temp.		ºF	137	107	127	117
	Ref. pipe length [Total pipe length for multi-system]		ft	25 [50]			
	Refrigerant charge (R410A)		-	8 lb. 13 oz.			
Outdoor unit	Intake air temperature	DB	ºF	95	47	95	47
		WB	ºF	-	43	-	43
	Fan speed		rpm	630	730	630	730
	Airflow		CFM	2,118	2,542	2,118	2,542

Model				MXZ-3C24NAHZ2			
Indoor type				Non-Duct (06+06+09)		Duct (09+09+09)	
Item			Unit	Cooling	Heating	Cooling	Heating
Total	Capacity		Btu/h	22,000	25,000	23,600	24,600
	SHF		-	-	-	-	-
	Input		kW	1.63	1.73	2.36	1.88
Electrical circuit	Power supply (V, phase, Hz)			208/230, 1, 60			
	Input		kW	1.564	1.661	2.180	1.760
	Comp. current (208/230V)		A	7.52/6.8	7.99/7.22	10.48/9.48	8.46/7.65
	Fan motor current		A	0.43/0.39	0.43/0.39	0.43/0.39	0.43/0.39
Refrigerant circuit	Condensing pressure		PSIG	397	302	377	329
	Suction pressure		PSIG	164	106	136	109
	Discharge temperature		ºF	144	122	152	127
	Condensing temperature		ºF	114	97	115	103
	Suction temperature		ºF	59	42	48	36
	Comp. shell bottom temp.		ºF	128	105	136	109
	Ref. pipe length [Total pipe length for multi-system]		ft	25 [70]			
	Refrigerant charge (R410A)		-	8 lb. 13 oz.			
Outdoor unit	Intake air temperature	DB	ºF	95	47	95	47
		WB	ºF	-	43	-	43
	Fan speed		rpm	630	730	630	730
	Airflow		CFM	2,118	2,542	2,118	2,542

Model				MXZ-3C30NAHZ2			
Indoor type				Non-Duct (09+09+12)		Duct (09+09+12)	
Item			Unit	Cooling	Heating	Cooling	Heating
Total	Capacity		Btu/h	28,400	28,600	27,400	27,600
	SHF		-	-	-	-	-
	Input		kW	2.28	2.10	2.67	2.19
Electrical circuit	Power supply (V, phase, Hz)			208/230, 1, 60			
	Input		kW	2.214	2.031	2.480	2.060
	Comp. current (208/230V)		A	10.64/9.63	9.76/8.83	11.92/10.78	9.9/8.96
	Fan motor current		A	0.43/0.39	0.43/0.39	0.43/0.39	0.43/0.39
Refrigerant circuit	Condensing pressure		PSIG	404	321	416	329
	Suction pressure		PSIG	146	103	131	107
	Discharge temperature		ºF	146	131	153	128
	Condensing temperature		ºF	117	101	118	103
	Suction temperature		ºF	52	35	45	35
	Comp. shell bottom temp.		ºF	129	111	135	108
	Ref. pipe length [Total pipe length for multi-system]		ft	25 [70]			
	Refrigerant charge (R410A)		-	8 lb. 13 oz.			
Outdoor unit	Intake air temperature	DB	ºF	95	47	95	47
		WB	ºF	-	43	-	43
	Fan speed		rpm	650	730	650	730
	Airflow		CFM	2,224	2,542	2,224	2,542

8-2. OPERATING RANGE

(1) POWER SUPPLY

	Model	Rating	Guaranteed Voltage
Outdoor unit	MXZ-2C20NA2 MXZ-2C20NAHZ2 MXZ-3C24NA2 MXZ-3C24NAHZ2 MXZ-3C30NA2 MXZ-3C30NAHZ2 MXZ-4C36NA2 MXZ-5C42NA2	208/230 V 60 Hz 1 ϕ	Min. 198 V 208 V 230 V Max. 253 V

(2) OPERATION

Function	Condition \ Intake air temperature	Indoor		Outdoor	
		DB (°F)	WB (°F)	DB (°F)	WB (°F)
Cooling	"A" Cooling steady state at rated compressor speed	80	67	95	(75)
	"B-2" Cooling steady state at rated compressor speed	80	67	82	(65)
	"B-1" Cooling steady state at minimum compressor speed	80	67	82	(65)
	Low ambient cooling steady state at minimum compressor speed	80	67	67	(53.5)
	Intermediate cooling steady state at intermediate compressor speed	80	67	87	(69)
Heating	Standard rating-heating at rated compressor speed	70	60	47	43
	Low temperature heating at rated compressor speed	70	60	17	15
	Max. temperature heating at minimum compressor speed	70	60	62	56.5
	High temperature heating at minimum compressor speed	70	60	47	43
	Frost accumulation at rated compressor speed	70	60	35	33
	Frost accumulation at intermediate compressor speed	70	60	35	33

8-3. PERFORMANCE CURVES

MXZ-2C20NA2 MXZ-3C24NA2 MXZ-3C30NA2 MXZ-4C36NA2 MXZ-5C42NA2
MXZ-2C20NAHZ2 MXZ-3C24NAHZ2 MXZ-3C30NAHZ2

The standard specifications apply only to the operation of the air conditioner under normal conditions.
Since operating conditions vary according to the areas where these units are installed, the following information has been provided to clarify the operating characteristics of the air conditioner under the conditions indicated by the performance curve.

(1) GUARANTEED VOLTAGE

198 ~ 253 V 60 Hz

(2) AIR FLOW

Air flow should be set at MAX.

(3) MAIN READINGS

(1) Indoor intake air wet-bulb temperature :	°FWB	Cooling
(2) Indoor outlet air wet-bulb temperature :	°FWB	Cooling
(3) Outdoor intake air dry-bulb temperature :	°FDB	Cooling
(4) Total input:	W	Cooling
(5) Indoor intake air dry-bulb temperature :	°FDB	Heating
(6) Outdoor intake air wet-bulb temperature :	°FWB	Heating
(7) Total input :	W	Heating

Indoor air wet and dry bulb temperature difference on the left side of the following chart shows the difference between the indoor intake air wet and dry bulb temperature and the indoor outlet air wet and dry bulb temperature for your reference at service.

How to measure the indoor air wet and dry bulb temperature difference

1. Attach at least 2 sets of wet and dry bulb thermometers to the indoor air intake as shown in the figure, and at least 2 sets of wet and dry bulb thermometers to the indoor air outlet. The thermometers must be attached to the position where air speed is high.
2. Attach at least 2 sets of wet and dry bulb thermometers to the outdoor air intake.
   Cover the thermometers to prevent direct rays of the sun.
3. Check that the air filter is cleaned.
4. Open windows and doors of room.
5. Press the EMERGENCY OPERATION switch once (twice) to start the EMERGENCY COOL (HEAT) MODE.
6. Compressor starts running at 33 Hz (COOL) or 45 Hz (HEAT). The frequency at each operation mode is fixed.
7. When system stabilizes after more than 15 minutes, measure temperature and take an average temperature.
8. 10 minutes later, measure temperature again and check that the temperature does not change.

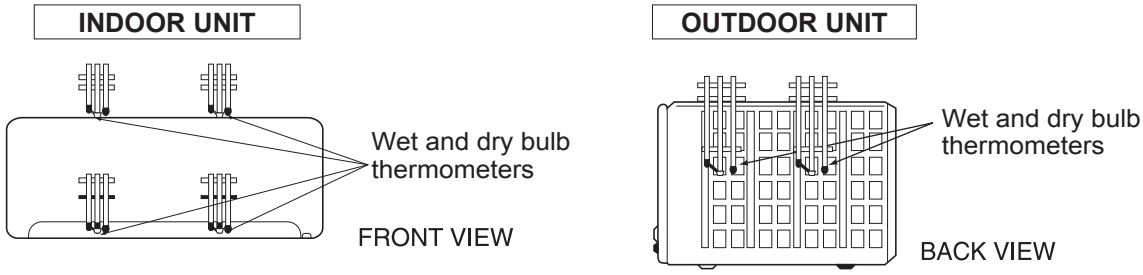

8-3-1. Capacity and the input curves

MXZ-2C20NA2

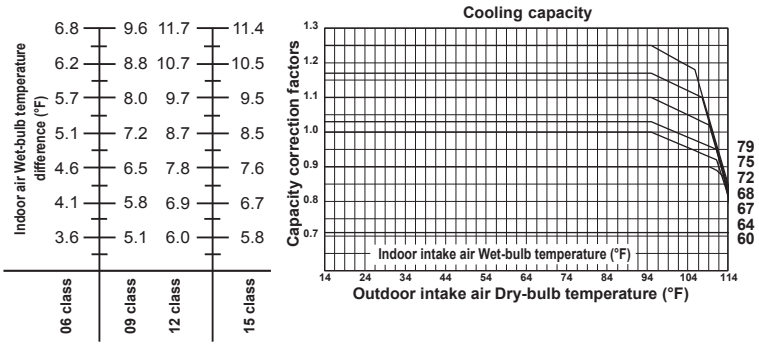

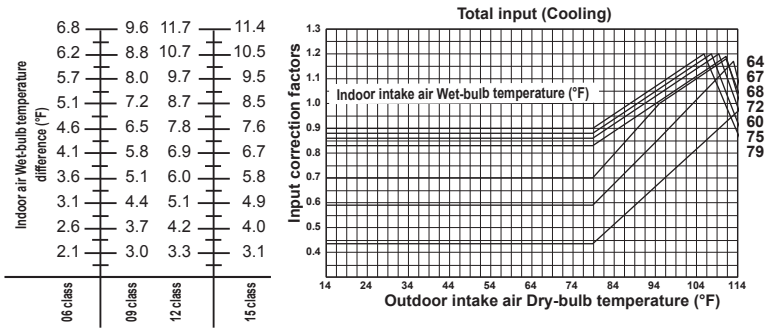

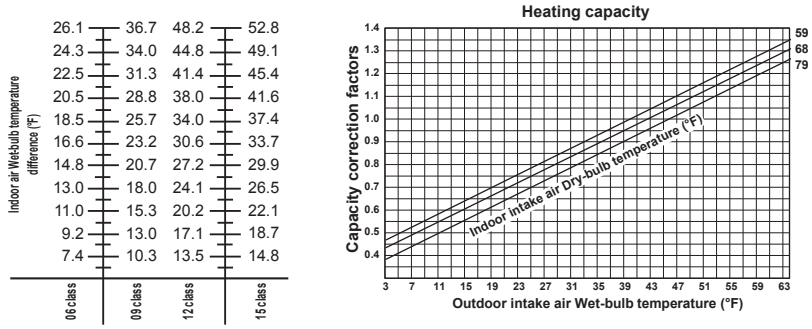

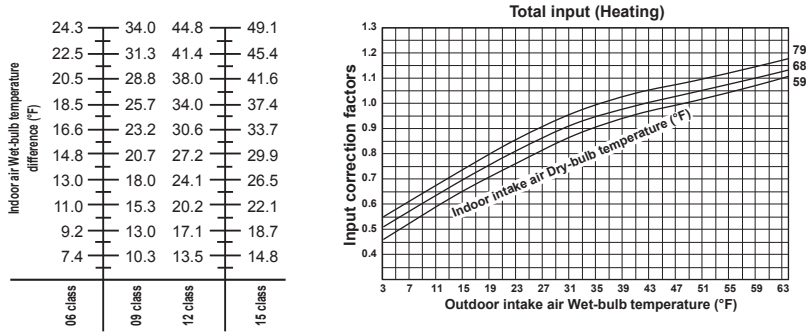

MXZ-3C24NA2 MXZ-3C30NA2 MXZ-4C36NA2

Indoor air Wet-bulb temperature difference (°F)	06 class	09 class	12 class	15 class	18 class	24 class
6.8	9.6	11.7	11.4	14.5	13.2
6.2	8.8	10.7	10.5	13.2	12.1
5.7	8.0	9.7	9.5	12.0	10.9
5.1	7.2	8.7	8.5	10.7	9.8
4.6	6.5	7.8	7.6	9.5	8.7
4.1	5.8	6.9	6.7	8.3	7.6
3.6	5.1	6.0	5.8	7.1	6.5

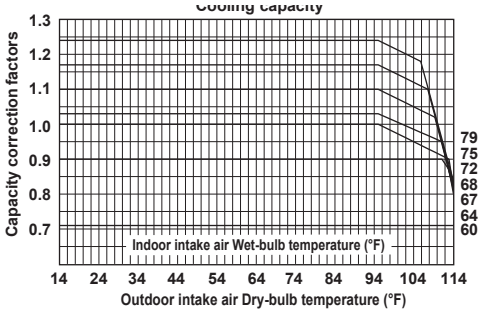

Indoor air Wet-bulb temperature difference (°F)	06 class	09 class	12 class	15 class	18 class	24 class
6.8	9.6	11.7	11.4	14.5	13.2
6.2	8.8	10.7	10.5	13.2	12.1
5.7	8.0	9.7	9.5	12.0	10.9
5.1	7.2	8.7	8.5	10.7	9.8
4.6	6.5	7.8	7.6	9.5	8.7
4.1	5.8	6.9	6.7	8.3	7.6
3.6	5.1	6.0	5.8	7.1	6.5
3.1	4.4	5.1	4.9	5.9	5.4
2.6	3.7	4.2	4.0	4.7	4.3
2.1	3.0	3.3	3.1	3.5	3.2

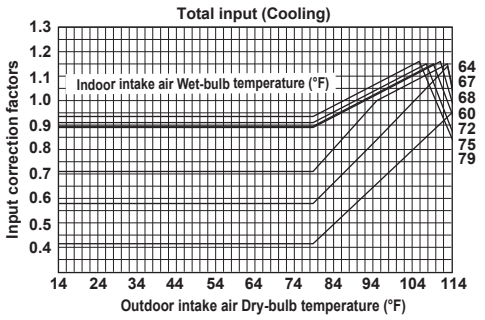

Indoor air Wet-bulb temperature difference (°F)	06 class	09 class	12 class	15 class	18 class	24 class
26.1	36.7	48.2	52.8	56.5	42.9
24.3	34.0	44.8	49.1	52.8	39.8
22.5	31.3	41.4	45.4	49.1	36.7
20.5	28.8	38.0	41.6	45.2	33.7
18.5	25.7	34.0	37.4	40.5	30.2
16.6	23.2	30.6	33.7	36.5	27.2
14.8	20.7	27.2	29.9	32.4	24.1
13.0	18.0	24.1	26.5	29.0	21.4
11.0	15.3	20.2	22.1	24.1	18.0
9.2	13.0	17.1	18.7	20.5	15.1
7.4	10.3	13.5	14.8	16.0	11.9

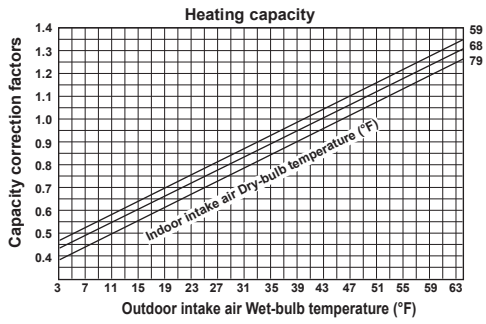

Indoor air Wet-bulb temperature difference (°F)	06 class	09 class	12 class	15 class	18 class	24 class
24.3	34.0	44.8	49.1	52.8	39.8
22.5	31.3	41.4	45.4	49.1	36.7
20.5	28.8	38.0	41.6	45.2	33.7
18.5	25.7	34.0	37.4	40.5	30.2
16.6	23.2	30.6	33.7	36.5	27.2
14.8	20.7	27.2	29.9	32.4	24.1
13.0	18.0	24.1	26.5	29.0	21.4
11.0	15.3	20.2	22.1	24.1	18.0
9.2	13.0	17.1	18.7	20.5	15.1
7.4	10.3	13.5	14.8	16.0	11.9

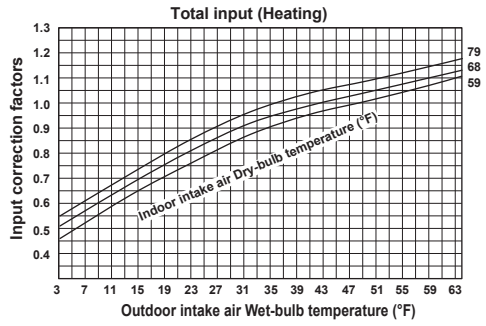

MXZ-5C42NA2

Indoor air Wet-bulb temperature difference (°F)	06 class	09 class	12 class	15 class	18 class	24 class
6.8	9.6	11.7	11.4	14.5	13.2
6.2	8.8	10.7	10.5	13.2	12.1
5.7	8.0	9.7	9.5	12.0	10.9
5.1	7.2	8.7	8.5	10.7	9.8
4.6	6.5	7.8	7.6	9.5	8.7
4.1	5.8	6.9	6.7	8.3	7.6
3.6	5.1	6.0	5.8	7.1	6.5

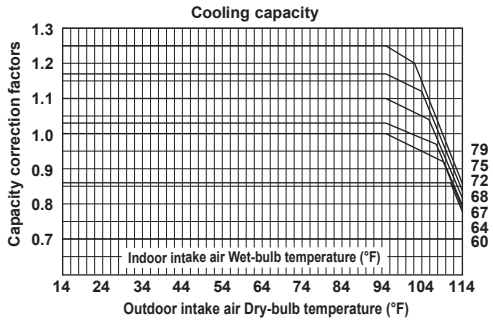

Indoor air Wet-bulb temperature difference (°F)	06 class	09 class	12 class	15 class	18 class	24 class
6.8	9.6	11.7	11.4	14.5	13.2
6.2	8.8	10.7	10.5	13.2	12.1
5.7	8.0	9.7	9.5	12.0	10.9
5.1	7.2	8.7	8.5	10.7	9.8
4.6	6.5	7.8	7.6	9.5	8.7
4.1	5.8	6.9	6.7	8.3	7.6
3.6	5.1	6.0	5.8	7.1	6.5
3.1	4.4	5.1	4.9	5.9	5.4
2.6	3.7	4.2	4.0	4.7	4.3
2.1	3.0	3.3	3.1	3.5	3.2

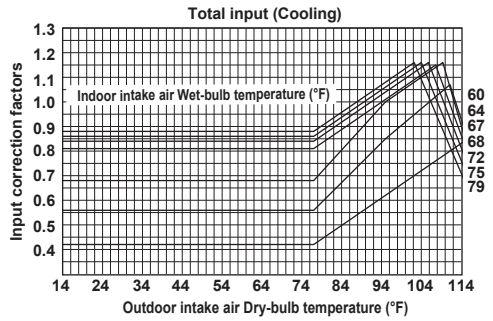

Indoor air Wet-bulb temperature difference (°F)	06 class	09 class	12 class	15 class	18 class	24 class
26.1	36.7	48.2	52.8	56.5	42.9
24.3	34.0	44.8	49.1	52.8	39.8
22.5	31.3	41.4	45.4	49.1	36.7
20.5	28.8	38.0	41.6	45.2	33.7
18.5	25.7	34.0	37.4	40.5	30.2
16.6	23.2	30.6	33.7	36.5	27.2
14.8	20.7	27.2	29.9	32.4	24.1
13.0	18.0	24.1	26.5	29.0	21.4
11.0	15.3	20.2	22.1	24.1	18.0
9.2	13.0	17.1	18.7	20.5	15.1
7.4	10.3	13.5	14.8	16.0	11.9

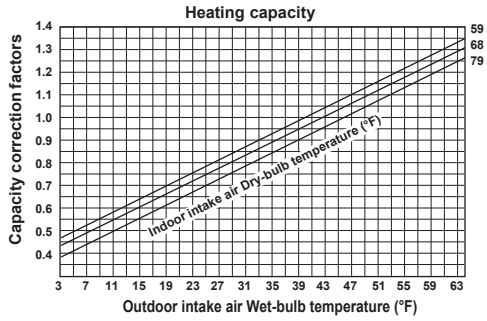

Indoor air Wet-bulb temperature difference (°F)	06 class	09 class	12 class	15 class	18 class	24 class
24.3	34.0	44.8	49.1	52.8	39.8
22.5	31.3	41.4	45.4	49.1	36.7
20.5	28.8	38.0	41.6	45.2	33.7
18.5	25.7	34.0	37.4	40.5	30.2
16.6	23.2	30.6	33.7	36.5	27.2
14.8	20.7	27.2	29.9	32.4	24.1
13.0	18.0	24.1	26.5	29.0	21.4
11.0	15.3	20.2	22.1	24.1	18.0
9.2	13.0	17.1	18.7	20.5	15.1
7.4	10.3	13.5	14.8	16.0	11.9

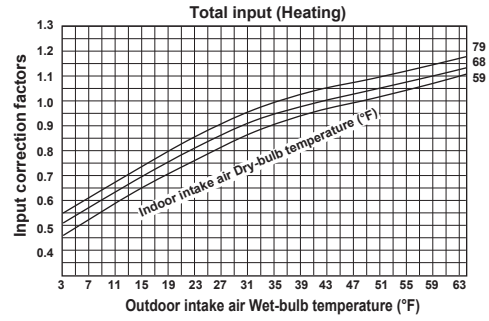

MXZ-2C20NAHZ2 MXZ-3C24NAHZ2 MXZ-3C30NAHZ2

Indoor air Wet-bulb temperature difference (°F)	06 class	09 class	12 class	15 class	18 class	24 class
6.8	9.6	11.7	11.4	14.5	13.2
6.2	8.8	10.7	10.5	13.2	12.1
5.7	8.0	9.7	9.5	12.0	10.9
5.1	7.2	8.7	8.5	10.7	9.8
4.6	6.5	7.8	7.6	9.5	8.7
4.1	5.8	6.9	6.7	8.3	7.6
3.6	5.1	6.0	5.8	7.1	6.5

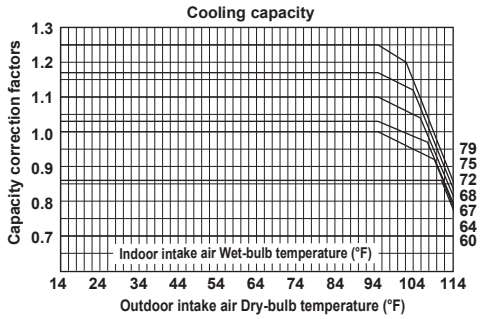

Indoor air Wet-bulb temperature difference (°F)	06 class	09 class	12 class	15 class	18 class	24 class
6.8	9.6	11.7	11.4	14.5	13.2
6.2	8.8	10.7	10.5	13.2	12.1
5.7	8.0	9.7	9.5	12.0	10.9
5.1	7.2	8.7	8.5	10.7	9.8
4.6	6.5	7.8	7.6	9.5	8.7
4.1	5.8	6.9	6.7	8.3	7.6
3.6	5.1	6.0	5.8	7.1	6.5
3.1	4.4	5.1	4.9	5.9	5.4
2.6	3.7	4.2	4.0	4.7	4.3
2.1	3.0	3.3	3.1	3.5	3.2

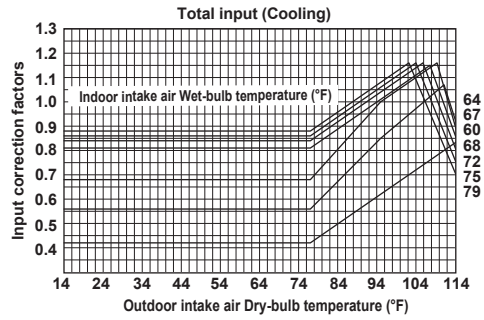

Indoor air Wet-bulb temperature difference (°F)	06 class	09 class	12 class	15 class	18 class	24 class
26.1	36.7	48.2	52.8	56.5	42.9
24.3	34.0	44.8	49.1	52.8	39.8
22.5	31.3	41.4	45.4	49.1	36.7
20.5	28.8	38.0	41.6	45.2	33.7
18.5	25.7	34.0	37.4	40.5	30.2
16.6	23.2	30.6	33.7	36.5	27.2
14.8	20.7	27.2	29.9	32.4	24.1
13.0	18.0	24.1	26.5	29.0	21.4
11.0	15.3	20.2	22.1	24.1	18.0
9.2	13.0	17.1	18.7	20.5	15.1

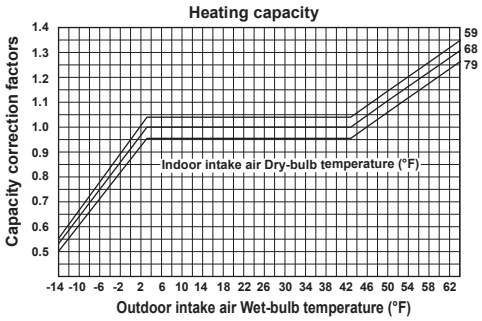

Indoor air Wet-bulb temperature difference (°F)	06 class	09 class	12 class	15 class	18 class	24 class
31.5	44.8	58.4	63.9	67.6	52.2
29.7	42.1	55.0	60.2	63.9	49.1
27.9	39.4	51.6	56.5	60.2	46.0
26.1	36.7	48.2	52.8	56.5	42.9
24.3	34.0	44.8	49.1	52.8	39.8
22.5	31.3	41.4	45.4	49.1	36.7
20.5	28.8	38.0	41.6	45.2	33.7
18.5	25.7	34.0	37.4	40.5	30.2
16.6	23.2	30.6	33.7	36.5	27.2
14.8	20.7	27.2	29.9	32.4	24.1

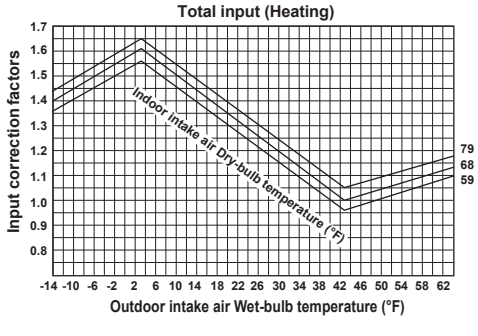

MXZ-2C20NA2

8-3-2. Capacity and input correction by means of inverter output frequency

1. 06-class unit in single operation

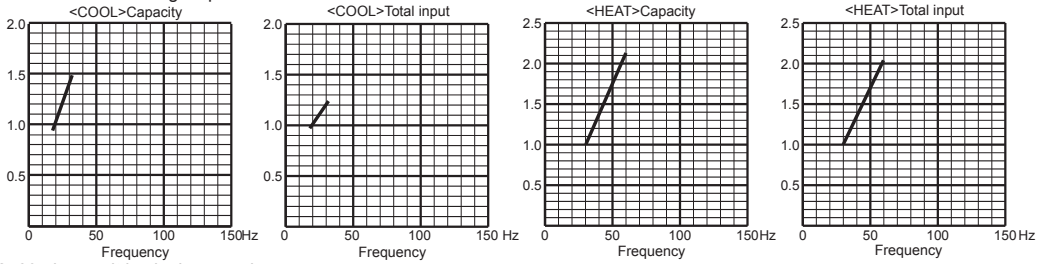

2. 09-class unit in single operation

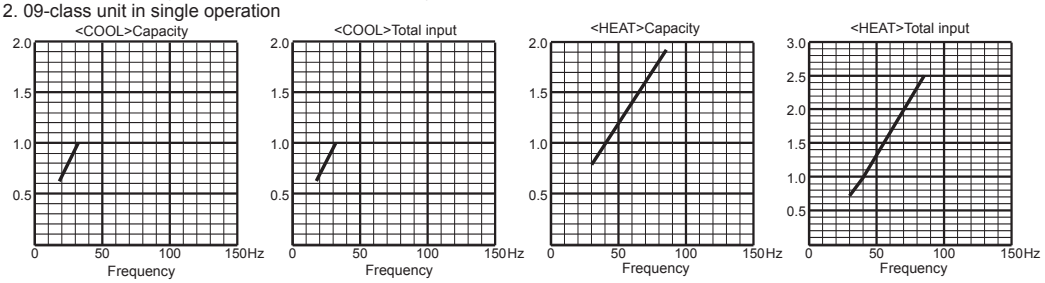

3. 12-class unit in single operation

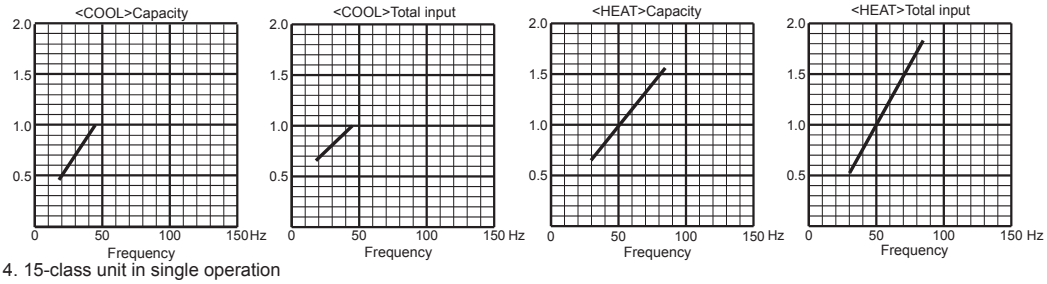

4. 15-class unit in single operation

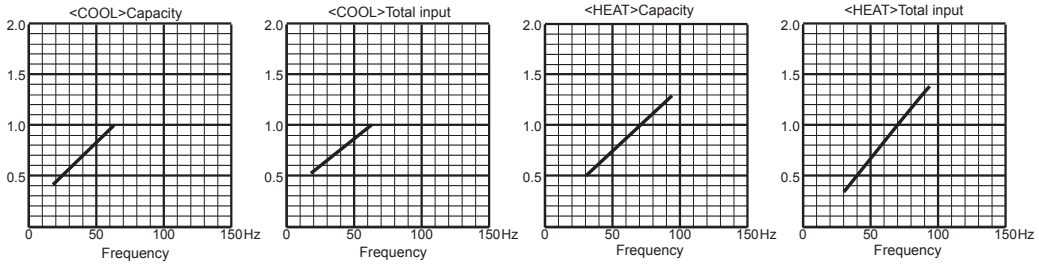

MXZ-3C24NA2 MXZ-3C30NA2 MXZ-4C36NA2

1. 06-class unit in single operation

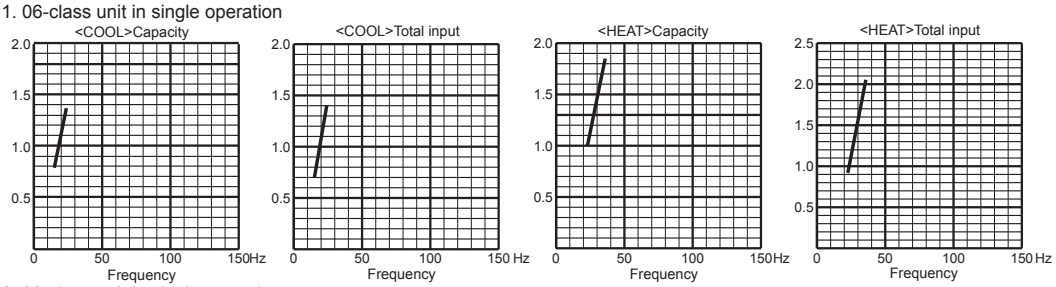

2. 09-class unit in single operation

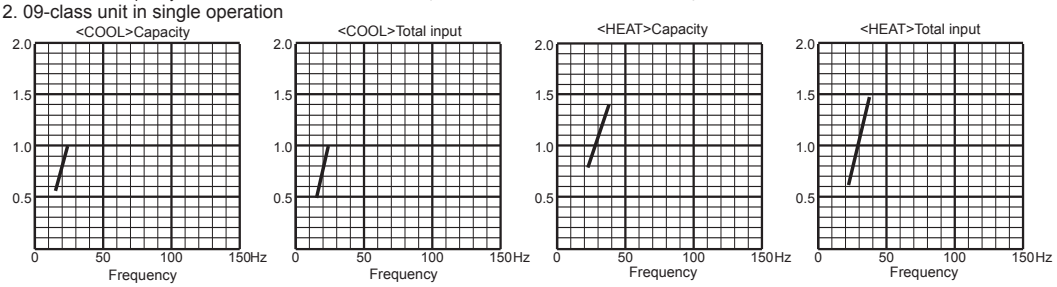

3. 12-class unit in single operation

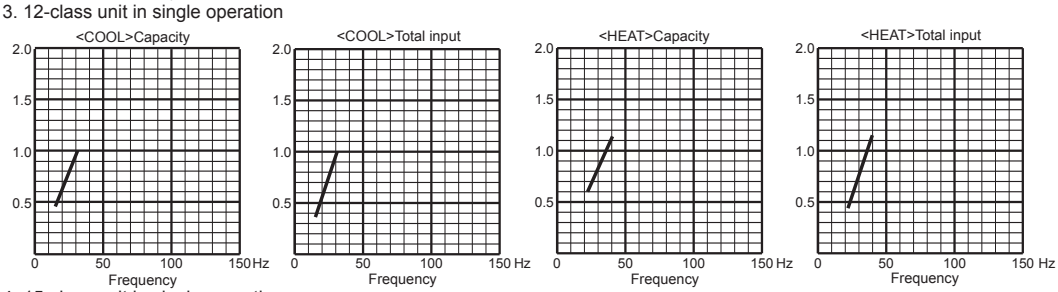

4. 15-class unit in single operation

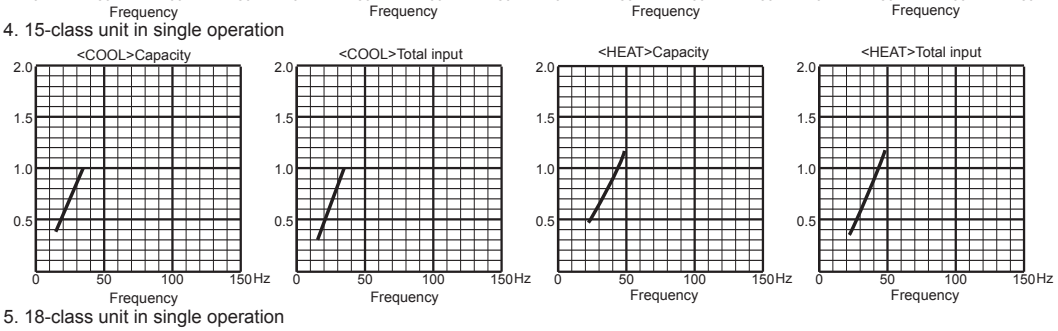

5. 18-class unit in single operation

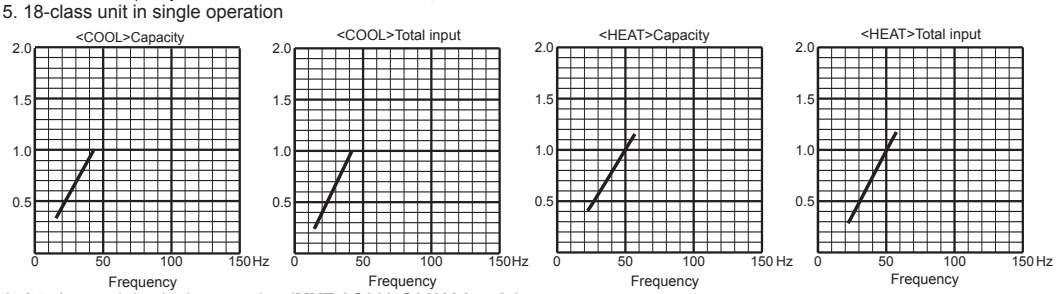

6. 24-class unit in single operation **(MXZ-3C30/4C36NA2 only)**

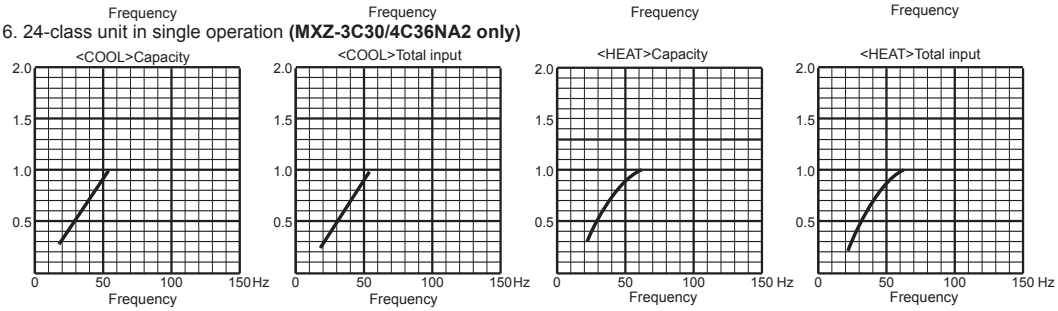

MXZ-5C42NA2 MXZ2C20NAHZ2 MXZ3C24NAHZ2 MXZ3C30NAHZ2

1. 06-class unit in single operation

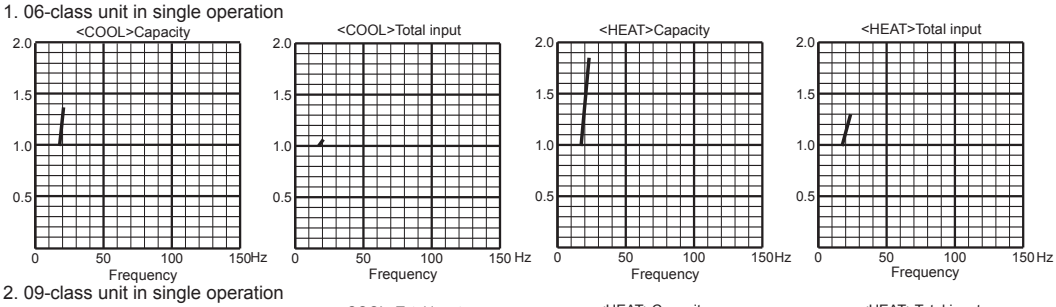

2. 09-class unit in single operation

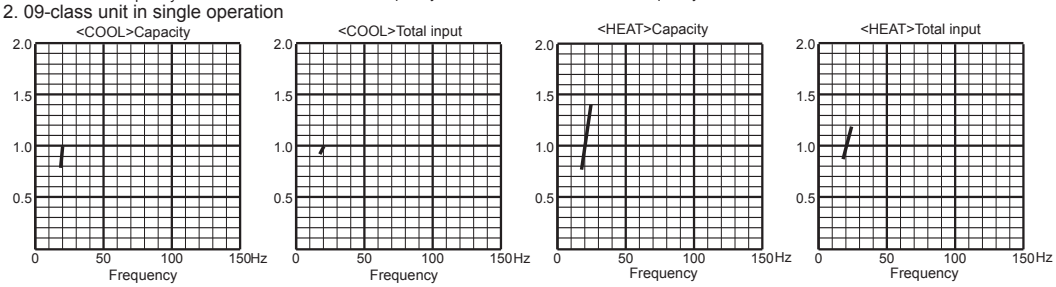

3. 12-class unit in single operation

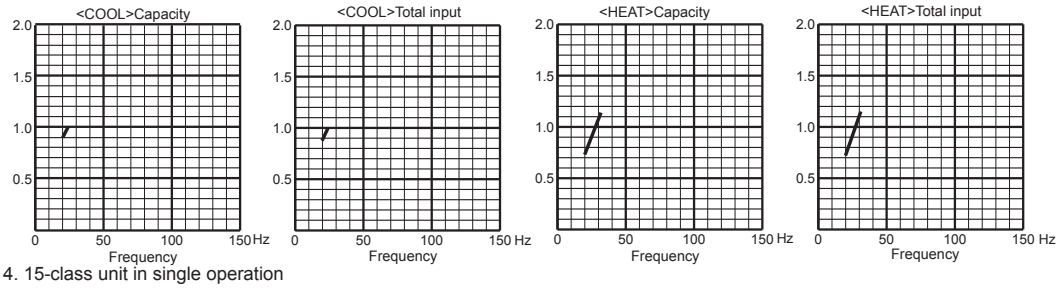

4. 15-class unit in single operation

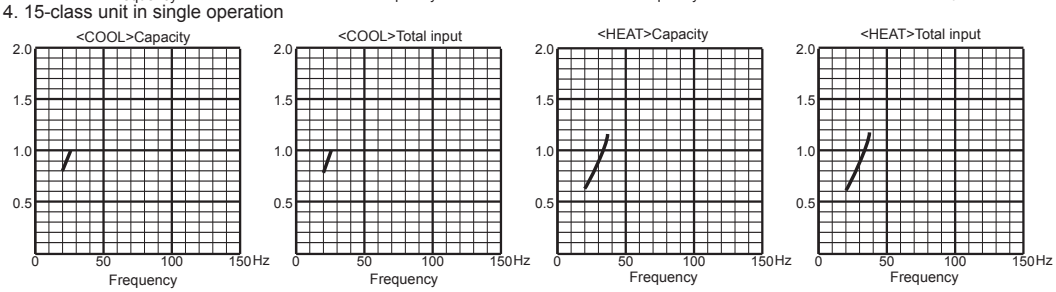

5. 18-class unit in single operation **(MXZ-5C42NA2, MXZ-3C24/30NAHZ2 only)**

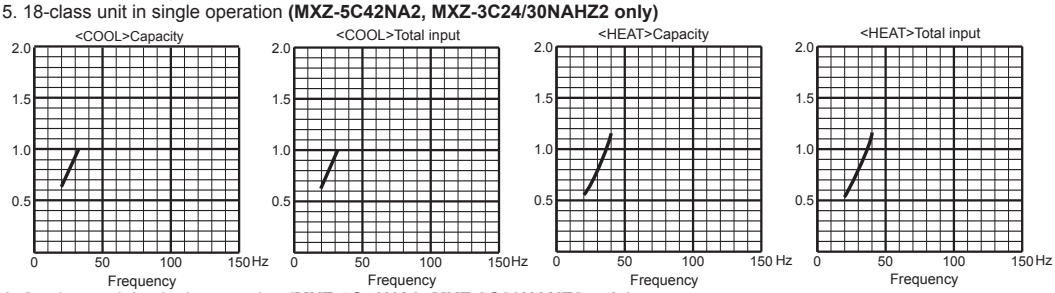

6. 24-class unit in single operation **(MXZ-5C42NA2, MXZ-3C30NAHZ2 only)**

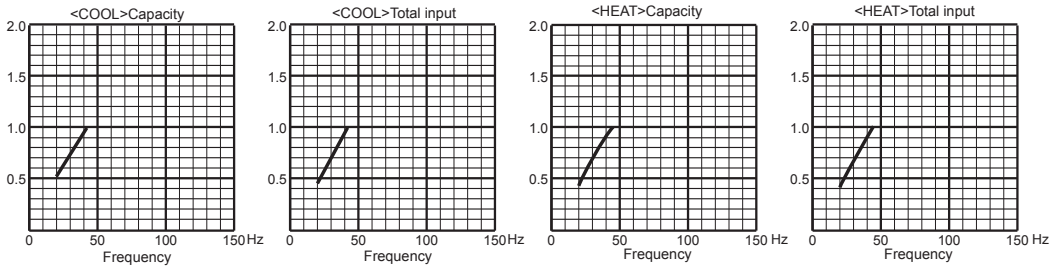

MXZ-2C20NA2

8-3-3. Outdoor low pressure and outdoor unit current

1. 06-class unit in single operation

(1) COOL operation

① Data is based on the condition of indoor humidity 50%
② Air flow speed: High
③ Inverter output frequency: 40 Hz

<How to work fixed-frequency operation>
1. Set emergency switch to COOL or HEAT. The switch is located on indoor unit.
2. Press emergency run ON/OFF button.
3. Compressor starts running at 40 Hz (COOL) or 48 Hz (HEAT).
4. Indoor fan runs at High speed and continues for 30 minutes.
5. To cancel this operation, press emergency run ON/OFF button or any button on remote controller.

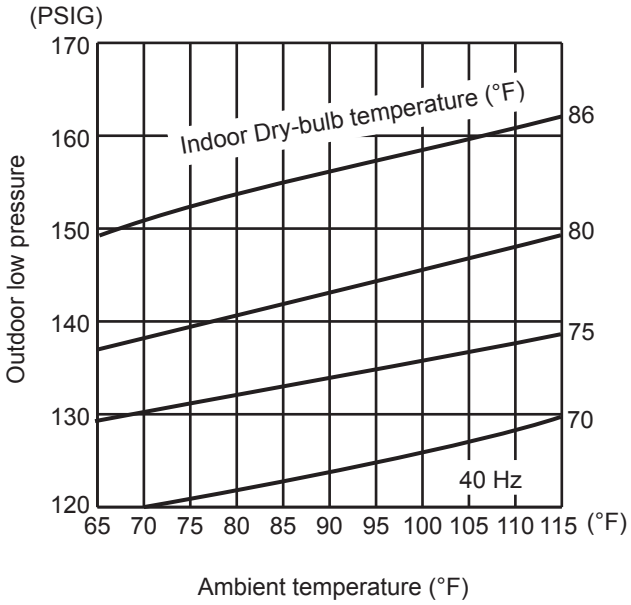

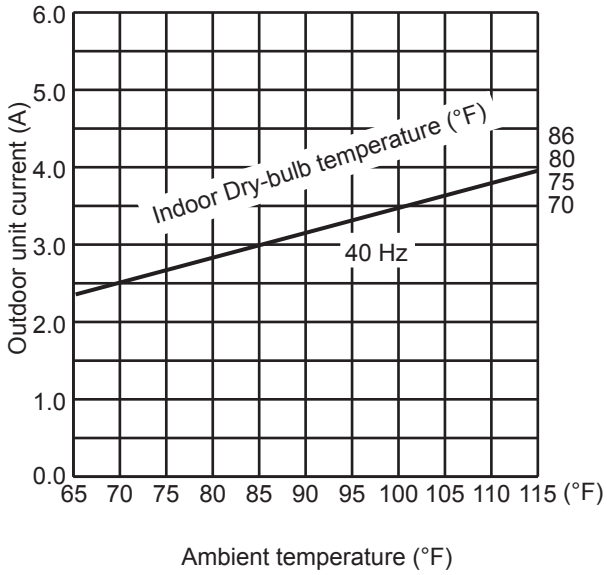

(2) HEAT operation

① Data is based on the condition of indoor humidity 75%
② Set air flow to High speed.
③ Inverter output frequency is 48 Hz.

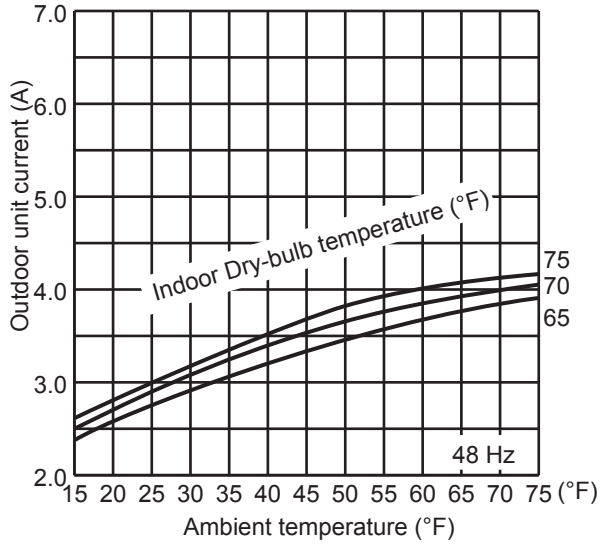

MXZ-2C20NA2

2. 09-class unit in single operation

(1) COOL operation

① Data is based on the condition of indoor humidity 50%
② Air flow speed: High
③ Inverter output frequency: 40 Hz

<How to work fixed-frequency operation>
1. Set emergency switch to COOL or HEAT. The switch is located on indoor unit.
2. Press emergency run ON/OFF button.
3. Compressor starts running at 40 Hz (COOL) or 48 Hz (HEAT).
4. Indoor fan runs at High speed and continues for 30 minutes.
5. To cancel this operation, press emergency run ON/OFF button or any button on remote controller.

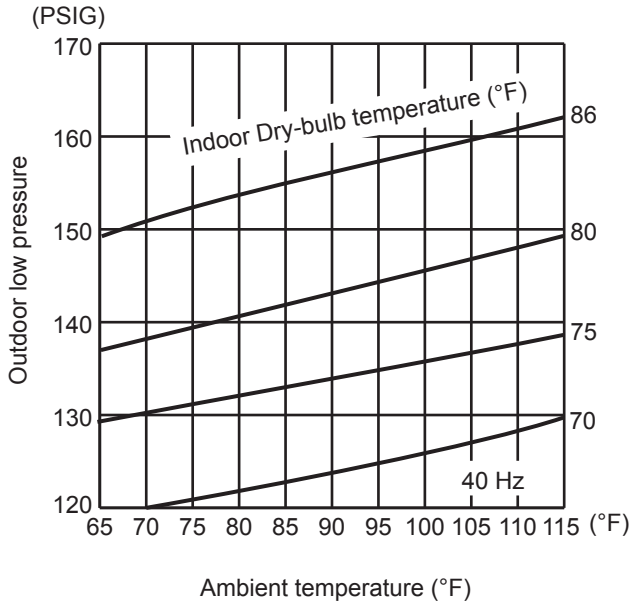

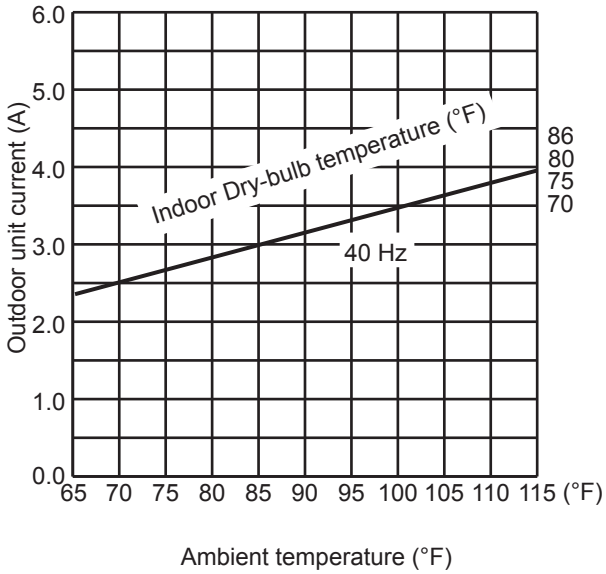

(2) HEAT operation

① Data is based on the condition of indoor humidity 75%
② Set air flow to High speed.
③ Inverter output frequency is 48 Hz.

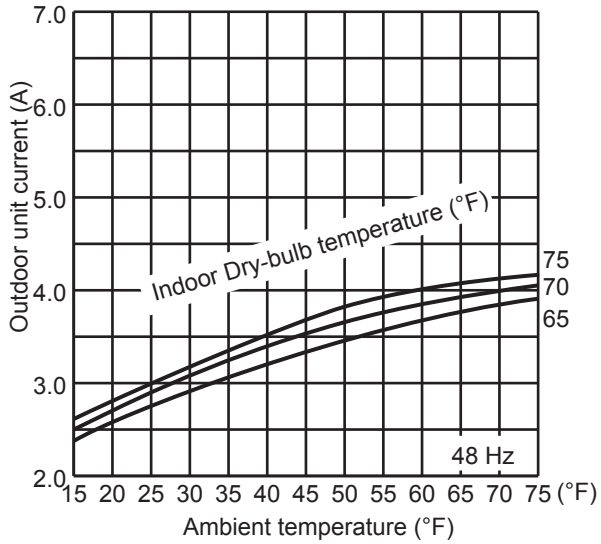

MXZ-2C20NA2

3. 12-class unit in single operation

(1) COOL operation

① Data is based on the condition of indoor humidity 50%
② Air flow speed: High
③ Inverter output frequency: 40 Hz

<How to work fixed-frequency operation>
1. Set emergency switch to COOL or HEAT. The switch is located on indoor unit.
2. Press emergency run ON/OFF button.
3. Compressor starts running at 40 Hz (COOL) or 48 Hz (HEAT).
4. Indoor fan runs at High speed and continues for 30 minutes.
5. To cancel this operation, press emergency run ON/OFF button or any button on remote controller.

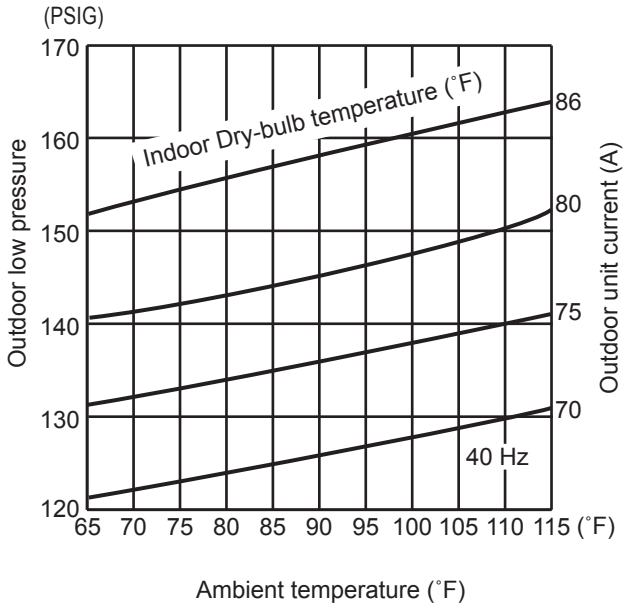

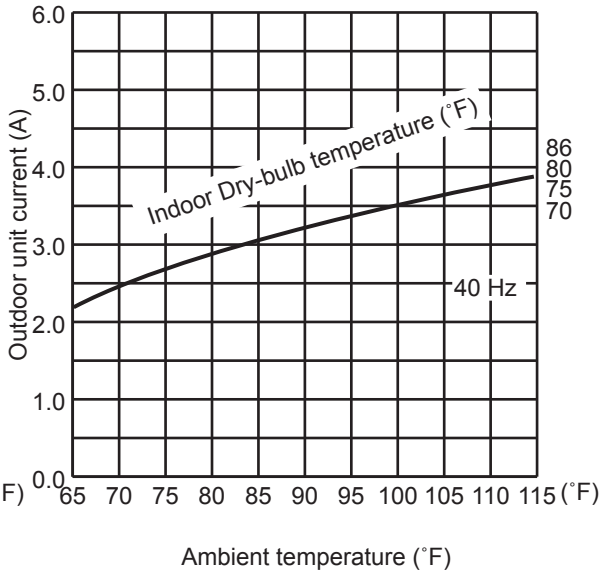

(2) HEAT operation

① Data is based on the condition of indoor humidity 75%
② Set air flow to High speed.
③ Inverter output frequency is 48 Hz.

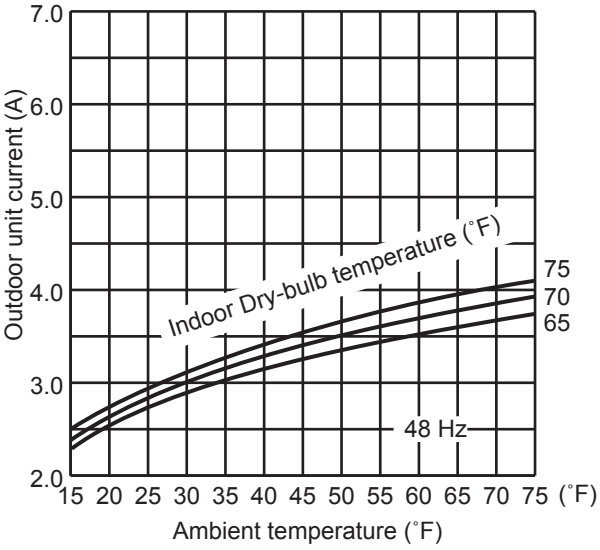

MXZ-2C20NA2

4. 15-class unit in single operation

(1) COOL operation

① Data is based on the condition of indoor humidity 50%
② Air flow speed: High
③ Inverter output frequency: 40 Hz

<How to work fixed-frequency operation>
1. Set emergency switch to COOL or HEAT. The switch is located on indoor unit.
2. Press emergency run ON/OFF button.
3. Compressor starts running at 40 Hz (COOL) or 48 Hz (HEAT).
4. Indoor fan runs at High speed and continues for 30 minutes.
5. To cancel this operation, press emergency run ON/OFF button or any button on remote controller.

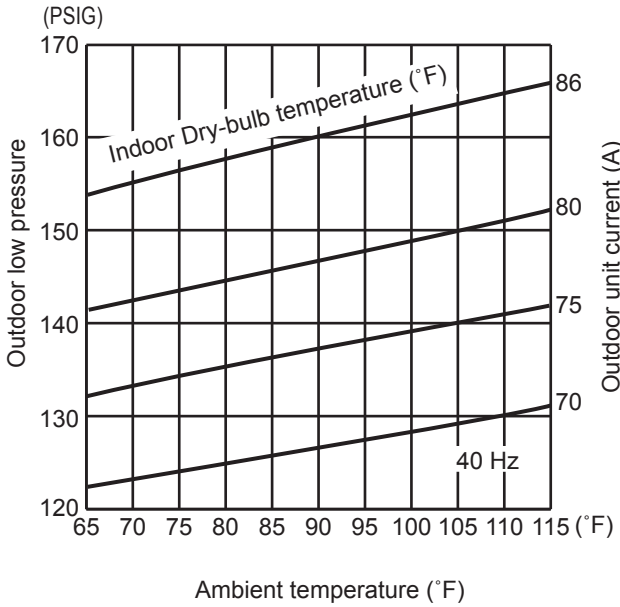

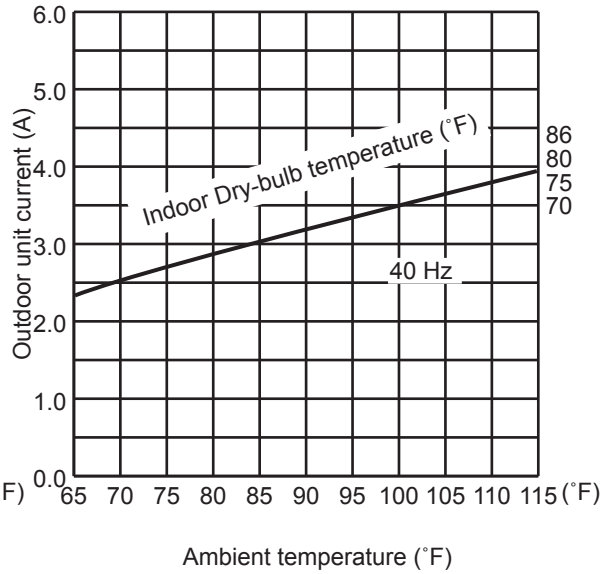

(2) HEAT operation

① Data is based on the condition of indoor humidity 75%
② Set air flow to High speed.
③ Inverter output frequency is 48 Hz.

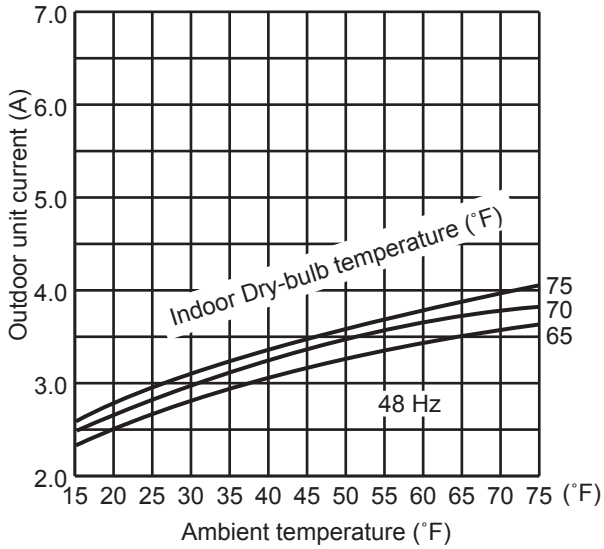

MXZ-3C24NA2 MXZ-3C30NA2 MXZ-4C36NA2

5. 06-class unit in single operation

(1) COOL operation

①Data is based on the condition of indoor humidity 50%

②Air flow speed : High

③Inverter output frequency : 24 Hz

<How to work fixed-frequency operation>

1. Set emergency switch to COOL or HEAT. The switch is located on indoor unit.
2. Press emergency run ON/OFF button.
3. Compressor starts running at 24 Hz (COOL) or 32 Hz (HEAT).
4. Indoor fan runs at High speed and continues for 30 minutes.
5. To cancel this operation, press emergency run ON/OFF button or any button on remote controller.

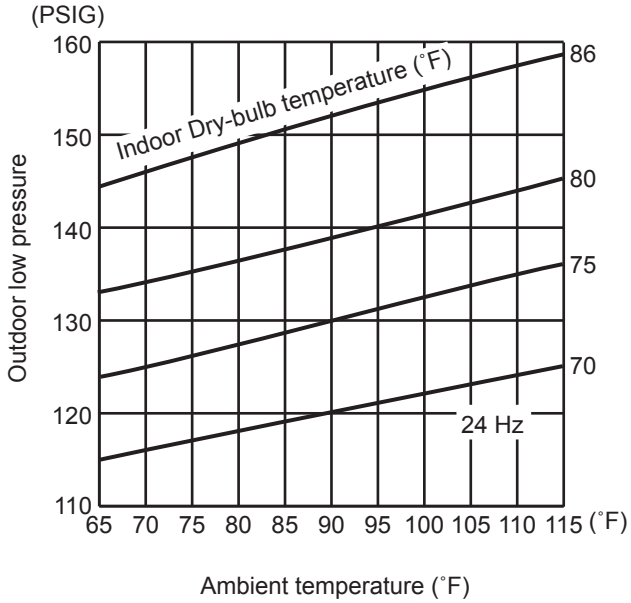

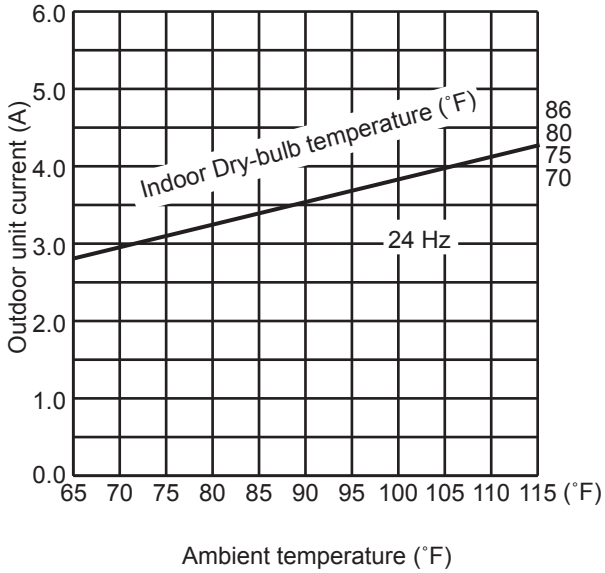

(2) HEAT operation

①Data is based on the condition of outdoor humidity 75%.

②Set air flow to High speed.

③Inverter output frequency is 32 Hz.

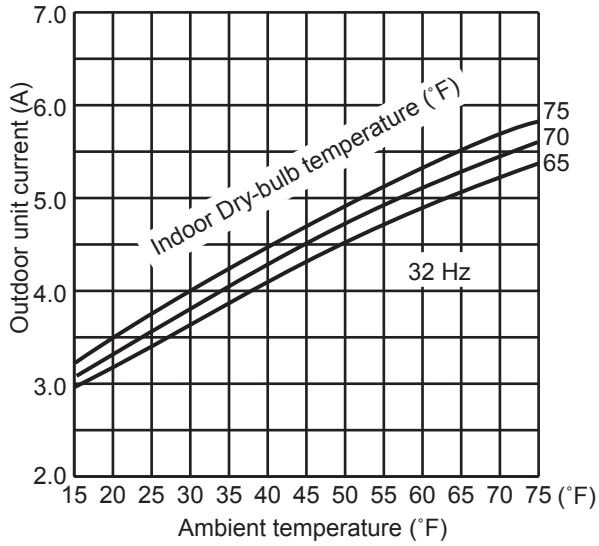

MXZ-3C24NA2 MXZ-3C30NA2 MXZ-4C36NA2

6. 09-class unit in single operation)

(1) COOL operation

①Data is based on the condition of indoor humidity 50%

②Air flow speed : High

③Inverter output frequency : 24 Hz

<How to work fixed-frequency operation>

1. Set emergency switch to COOL or HEAT. The switch is located on indoor unit.
2. Press emergency run ON/OFF button.
3. Compressor starts running at 24 Hz (COOL) or 32 Hz (HEAT).
4. Indoor fan runs at High speed and continues for 30 minutes.
5. To cancel this operation, press emergency run ON/OFF button or any button on remote controller.

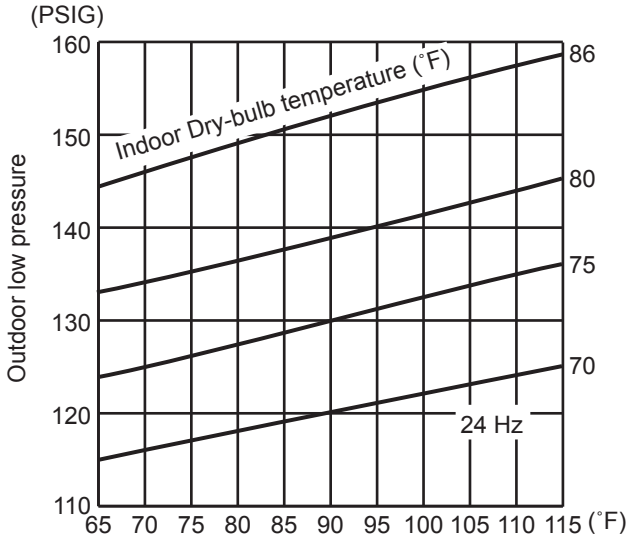

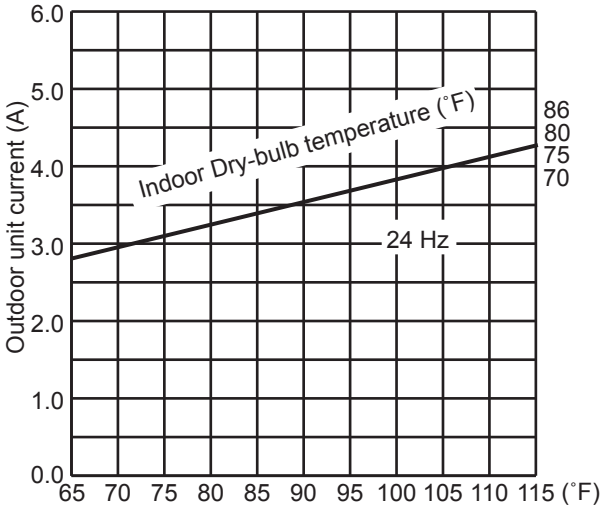

(2) HEAT operation

①Data is based on the condition of outdoor humidity 75%.

②Set air flow to High speed.

③Inverter output frequency is 32 Hz.

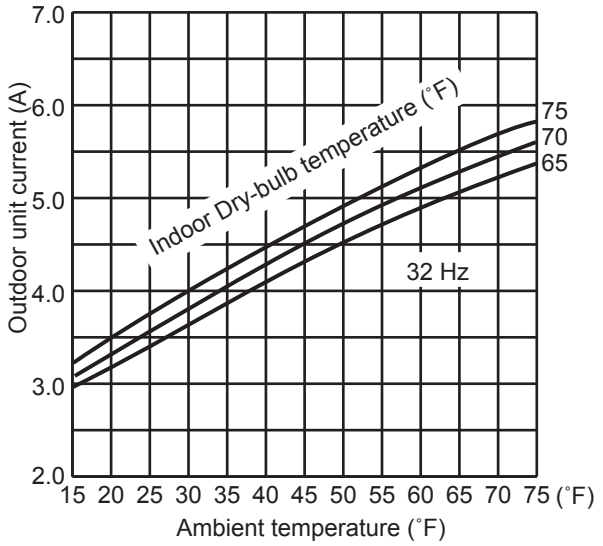

MXZ-3C24NA2 MXZ-3C30NA2 MXZ-4C36NA2

7. 12-class unit in single operation

(1) COOL operation

①Data is based on the condition of indoor humidity 50%

②Air flow speed : High

③Inverter output frequency : 24 Hz

<How to work fixed-frequency operation>

1. Set emergency switch to COOL or HEAT. The switch is located on indoor unit.
2. Press emergency run ON/OFF button.
3. Compressor starts running at 24 Hz (COOL) or 32 Hz (HEAT).
4. Indoor fan runs at High speed and continues for 30 minutes.
5. To cancel this operation, press emergency run ON/OFF button or any button on remote controller.

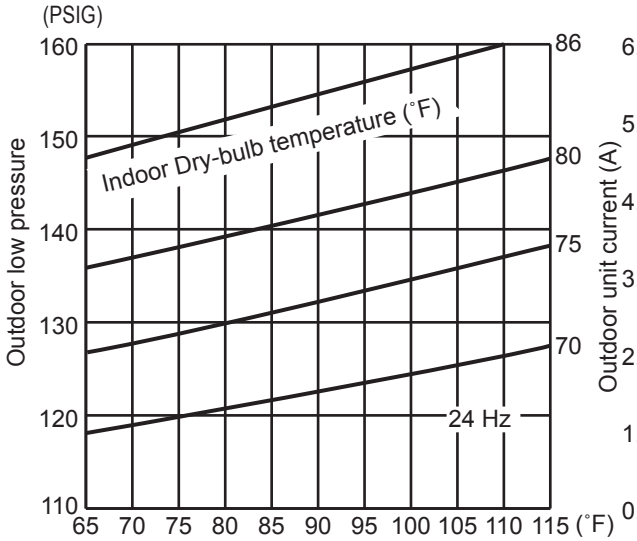

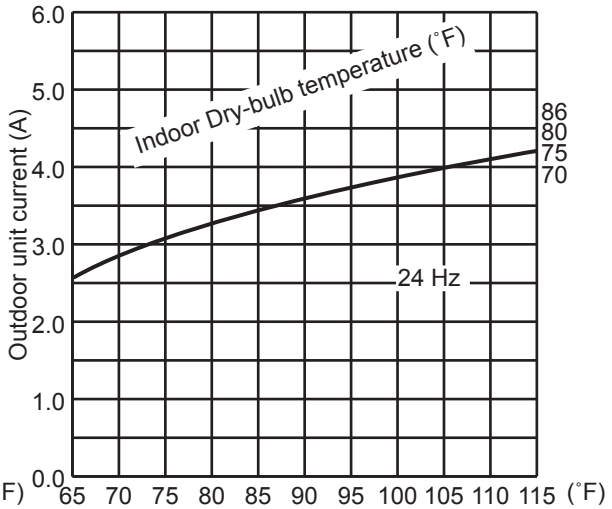

(2) HEAT operation

①Data is based on the condition of outdoor humidity 75%.

②Set air flow to High speed.

③Inverter output frequency is 32 Hz.

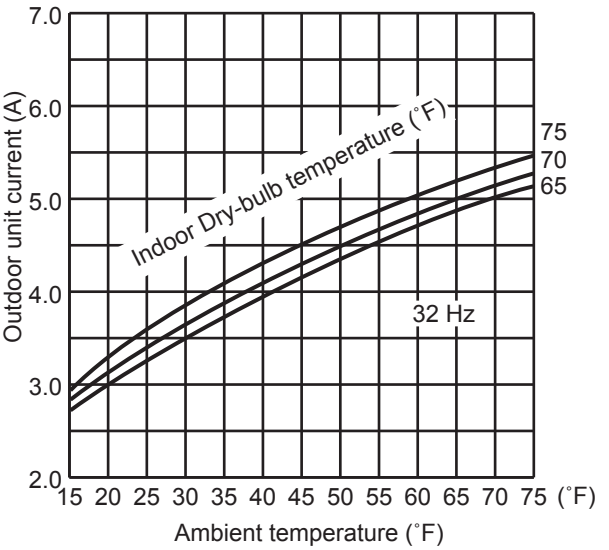

MXZ-3C24NA2 MXZ-3C30NA2 MXZ-4C36NA2

8. 15-class unit in single operation

(1) COOL operation

①Data is based on the condition of indoor humidity 50%

②Air flow speed : High

③Inverter output frequency : 24 Hz

<How to work fixed-frequency operation>

1. Set emergency switch to COOL or HEAT. The switch is located on indoor unit.
2. Press emergency run ON/OFF button.
3. Compressor starts running at 24 Hz (COOL) or 32 Hz (HEAT).
4. Indoor fan runs at High speed and continues for 30 minutes.
5. To cancel this operation, press emergency run ON/OFF button or any button on remote controller.

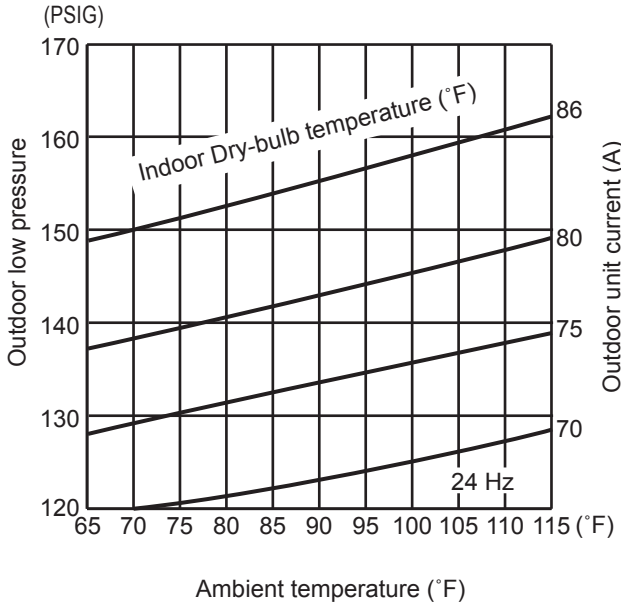

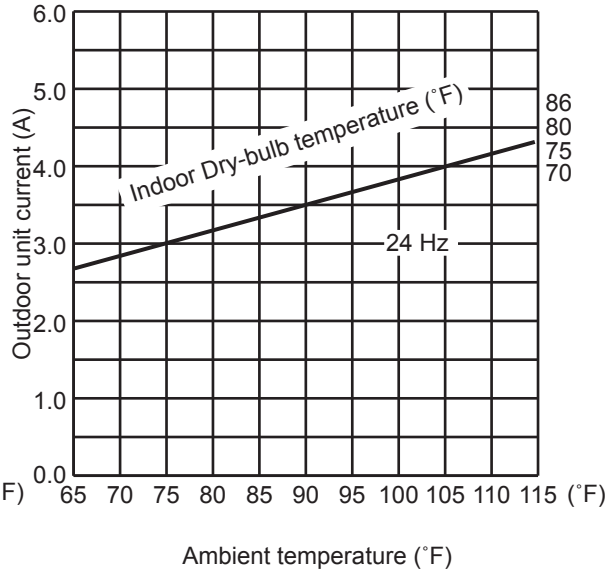

(2) HEAT operation

①Data is based on the condition of outdoor humidity 75%

②Set air flow to High speed.

③Inverter output frequency is 32 Hz.

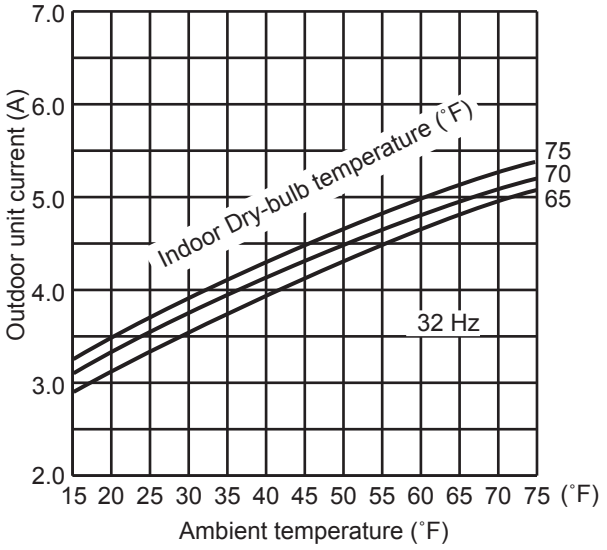

MXZ-3C24NA2 MXZ-3C30NA2 MXZ-4C36NA2

9. 18-class unit in single operation

(1) COOL operation

①Data is based on the condition of indoor humidity 50%

②Air flow speed : High

③Inverter output frequency : 24 Hz

<How to work fixed-frequency operation>

1. Set emergency switch to COOL or HEAT. The switch is located on indoor unit.
2. Press emergency run ON/OFF button.
3. Compressor starts running at 24 Hz (COOL) or 32 Hz (HEAT).
4. Indoor fan runs at High speed and continues for 30 minutes.
5. To cancel this operation, press emergency run ON/OFF button or any button on remote controller.

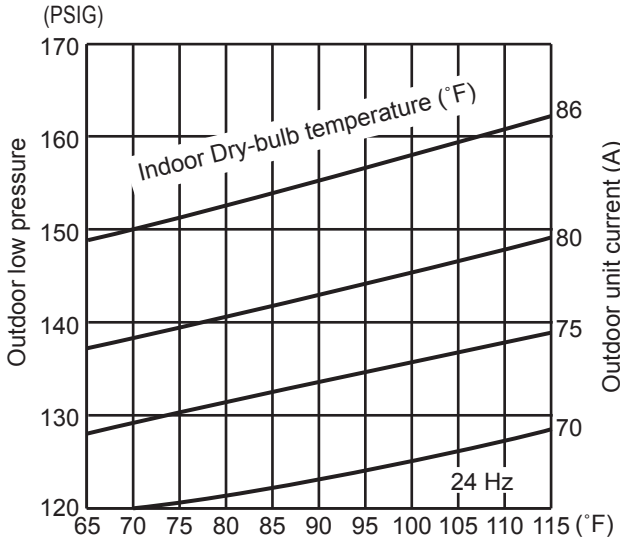

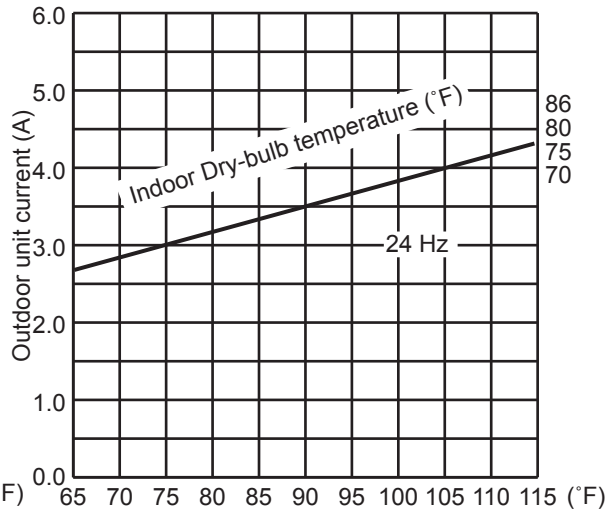

(2) HEAT operation

①Data is based on the condition of outdoor humidity 75%.

②Set air flow to High speed.

③Inverter output frequency is 32 Hz.

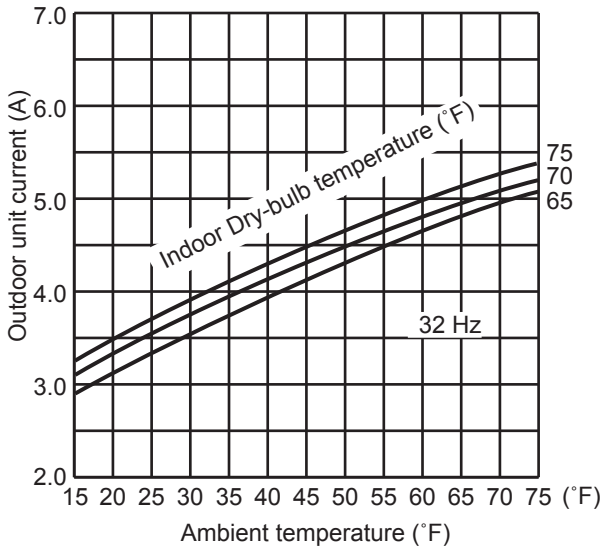

MXZ-3C30NA2 MXZ-4C36NA2

10. 24-class unit in single operation

(1) COOL operation

①Data is based on the condition of indoor humidity 50%

②Air flow speed : High

③Inverter output frequency : 24 Hz

<How to work fixed-frequency operation>

1. Set emergency switch to COOL or HEAT. The switch is located on indoor unit.
2. Press emergency run ON/OFF button.
3. Compressor starts running at 24 Hz (COOL) or 32 Hz (HEAT).
4. Indoor fan runs at High speed and continues for 30 minutes.
5. To cancel this operation, press emergency run ON/OFF button or any button on remote controller.

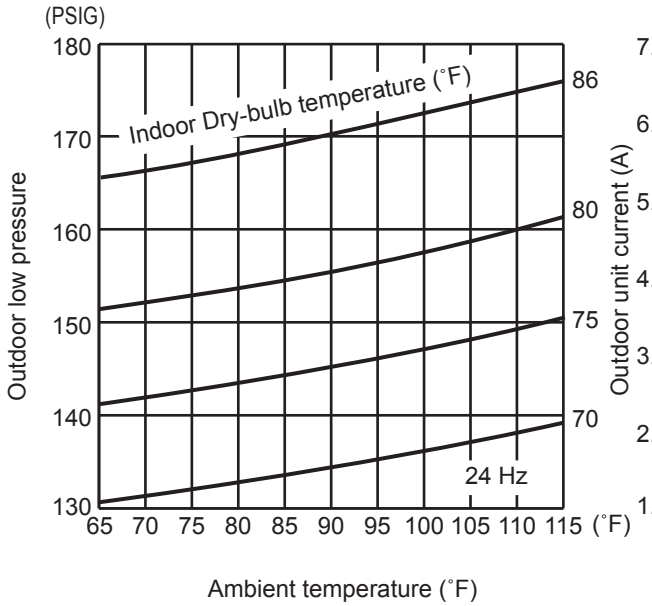

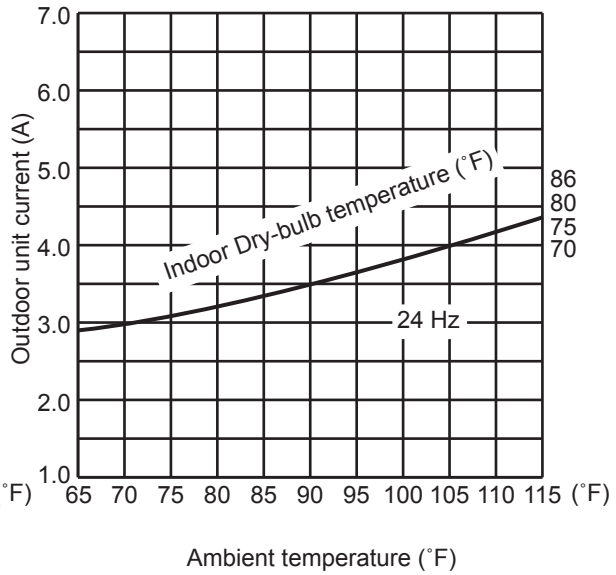

(2) HEAT operation

①Data is based on the condition of outdoor humidity 75%

②Set air flow to High speed.

③Inverter output frequency is 32 Hz.

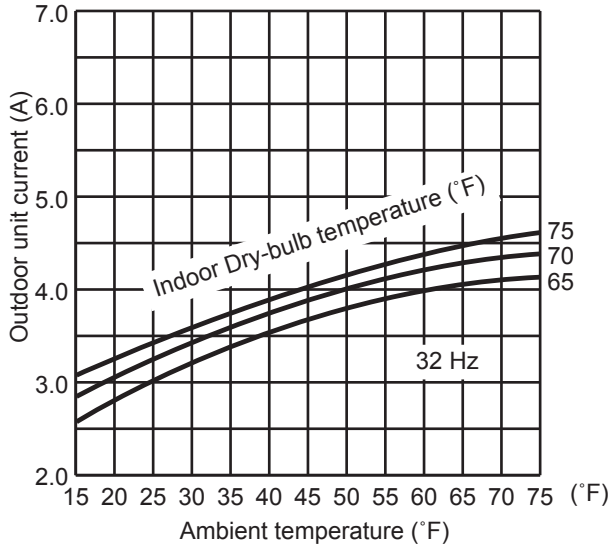

MXZ-5C42NA2 MXZ-2C20NAHZ2 MXZ-3C24NAHZ2 MXZ-3C30NAHZ2

11. 06-class unit in single operation

(1) COOL operation

①Data is based on the condition of indoor humidity 50%

②Air flow speed : High

③Inverter output frequency : 18 Hz

<How to work fixed-frequency operation>

1. Set emergency switch to COOL or HEAT. The switch is located on indoor unit.
2. Press emergency run ON/OFF button.
3. Compressor starts running at 18 Hz (COOL) or 20 Hz (HEAT).
4. Indoor fan runs at High speed and continues for 30 minutes.
5. To cancel this operation, press emergency run ON/OFF button or any button on remote controller.

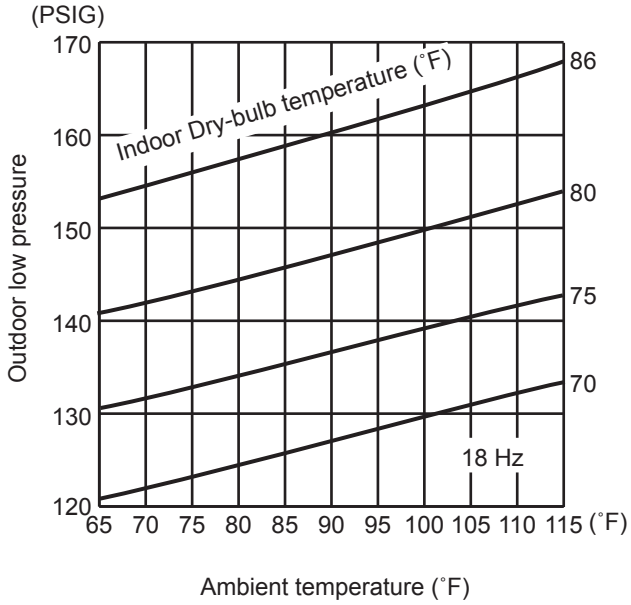

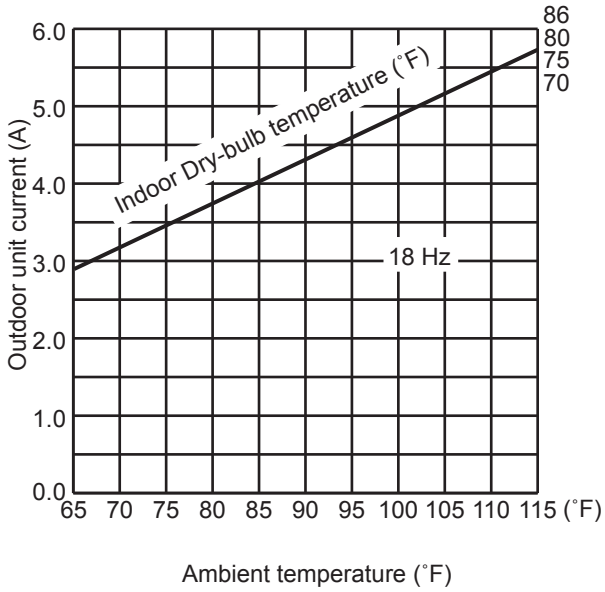

(2) HEAT operation

①Data is based on the condition of outdoor humidity 75%.

②Set air flow to High speed.

③Inverter output frequency is 20 Hz.

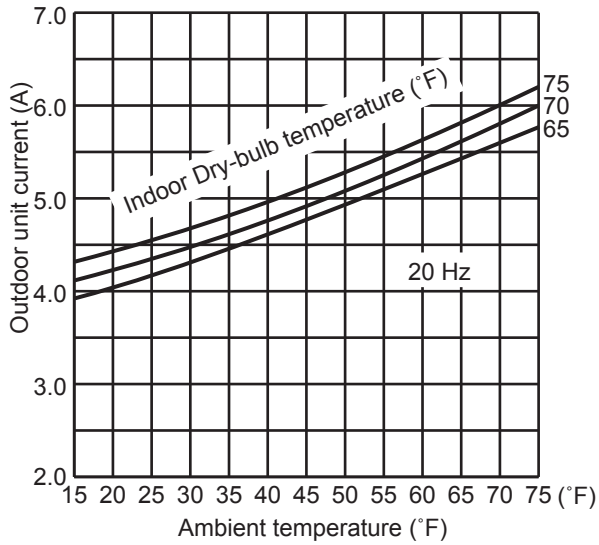

MXZ-5C42NA2 MXZ-2C20NAHZ2 MXZ-3C24NAHZ2 MXZ-3C30NAHZ2

12. 09-class unit in single operation

(1) COOL operation

①Data is based on the condition of indoor humidity 50%

②Air flow speed : High

③Inverter output frequency : 18 Hz

<How to work fixed-frequency operation>

1. Set emergency switch to COOL or HEAT. The switch is located on indoor unit.
2. Press emergency run ON/OFF button.
3. Compressor starts running at 18 Hz (COOL) or 20 Hz (HEAT).
4. Indoor fan runs at High speed and continues for 30 minutes.
5. To cancel this operation, press emergency run ON/OFF button or any button on remote controller.

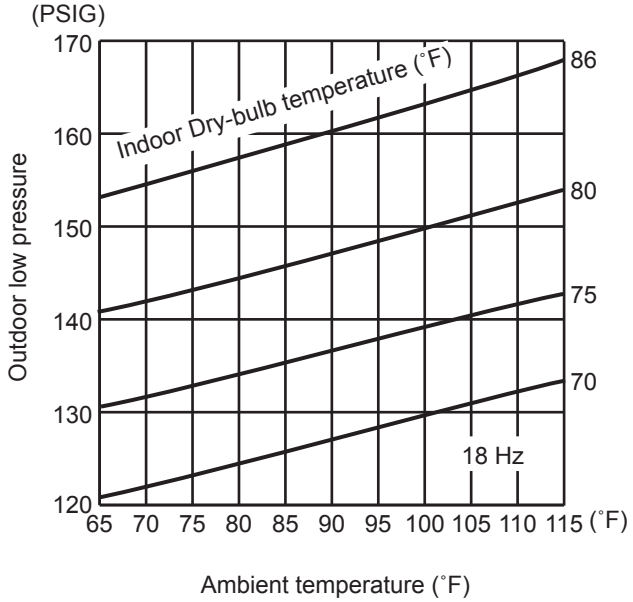

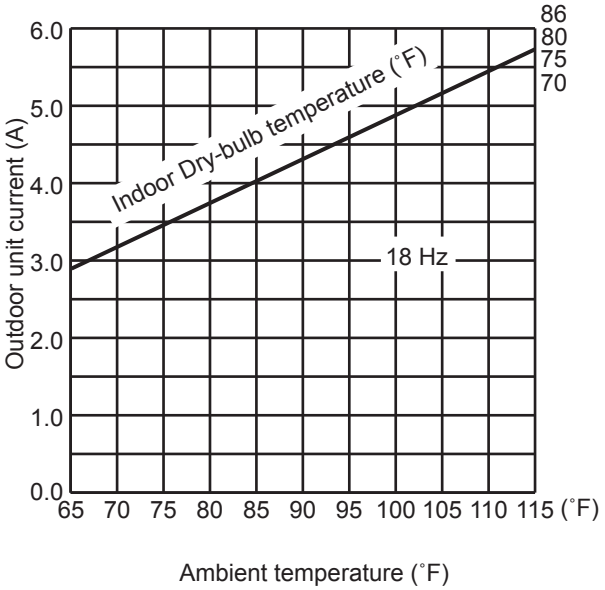

(2) HEAT operation

①Data is based on the condition of outdoor humidity 75%.

②Set air flow to High speed.

③Inverter output frequency is 20 Hz.

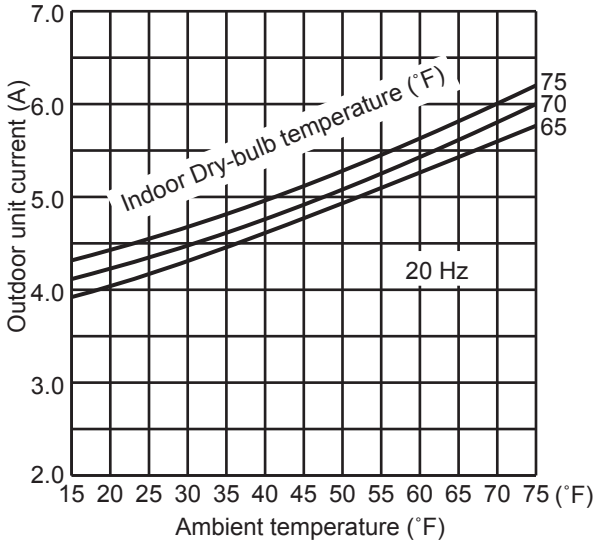

MXZ-5C42NA2 MXZ-2C20NAHZ2 MXZ-3C24NAHZ2 MXZ-3C30NAHZ2

13. 12-class unit in single operation

(1) COOL operation

①Data is based on the condition of indoor humidity 50%

②Air flow speed : High

③Inverter output frequency : 18 Hz

<How to work fixed-frequency operation>

1. Set emergency switch to COOL or HEAT. The switch is located on indoor unit.
2. Press emergency run ON/OFF button.
3. Compressor starts running at 18 Hz (COOL) or 20 Hz (HEAT).
4. Indoor fan runs at High speed and continues for 30 minutes.
5. To cancel this operation, press emergency run ON/OFF button or any button on remote controller.

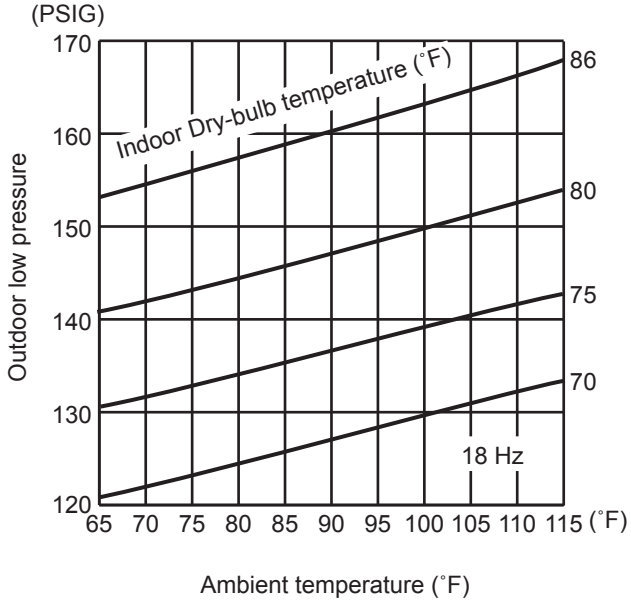

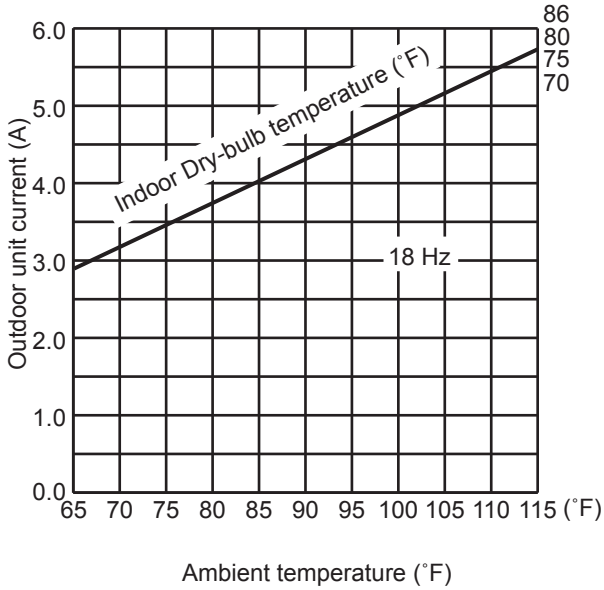

(2) HEAT operation

①Data is based on the condition of outdoor humidity 75%.

②Set air flow to High speed.

③Inverter output frequency is 20 Hz.

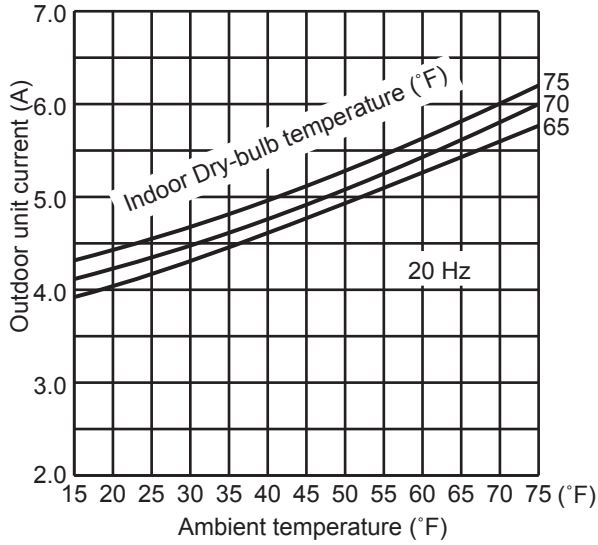

MXZ-5C42NA2 MXZ-2C20NAHZ2 MXZ-3C24NAHZ2 MXZ-3C30NAHZ2

14. 15-class unit in single operation

(1) COOL operation

①Data is based on the condition of indoor humidity 50%

②Air flow speed : High

③Inverter output frequency : 18 Hz

<How to work fixed-frequency operation>

1. Set emergency switch to COOL or HEAT. The switch is located on indoor unit.
2. Press emergency run ON/OFF button.
3. Compressor starts running at 18 Hz (COOL) or 20 Hz (HEAT).
4. Indoor fan runs at High speed and continues for 30 minutes.
5. To cancel this operation, press emergency run ON/OFF button or any button on remote controller.

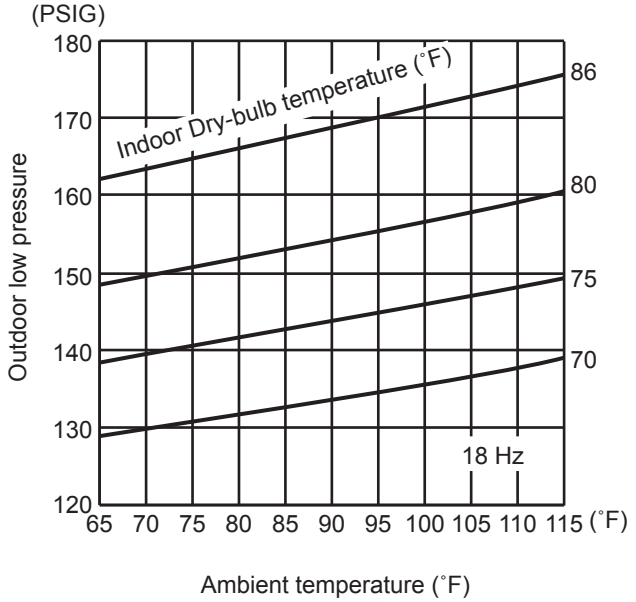

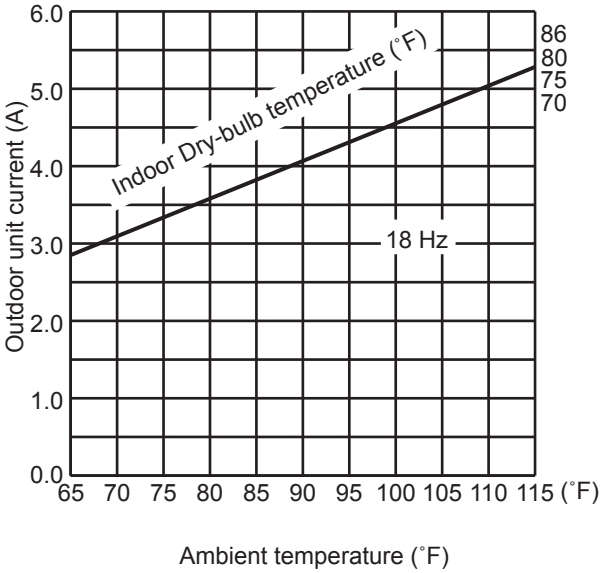

(2) HEAT operation

①Data is based on the condition of outdoor humidity 75%.

②Set air flow to High speed.

③Inverter output frequency is 20 Hz.

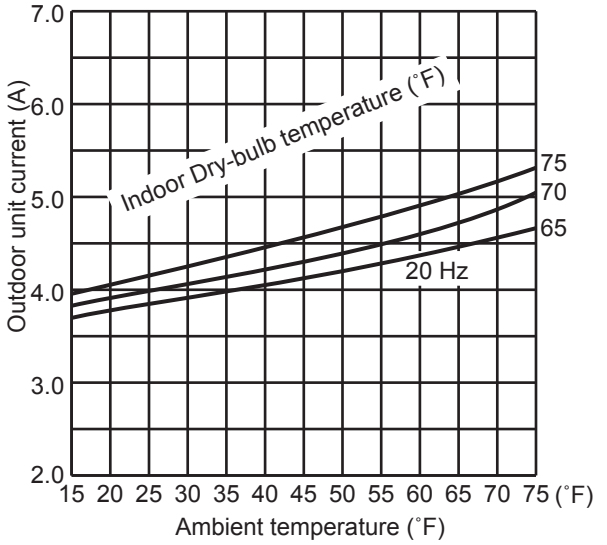

MXZ-5C42NA2 MXZ-3C24NAHZ2 MXZ-3C30NAHZ2

15. 18-class unit in single operation

(1) COOL operation

①Data is based on the condition of indoor humidity 50%

②Air flow speed : High

③Inverter output frequency : 18 Hz

<How to work fixed-frequency operation>

1. Set emergency switch to COOL or HEAT. The switch is located on indoor unit.
2. Press emergency run ON/OFF button.
3. Compressor starts running at 18 Hz (COOL) or 20 Hz (HEAT).
4. Indoor fan runs at High speed and continues for 30 minutes.
5. To cancel this operation, press emergency run ON/OFF button or any button on remote controller.

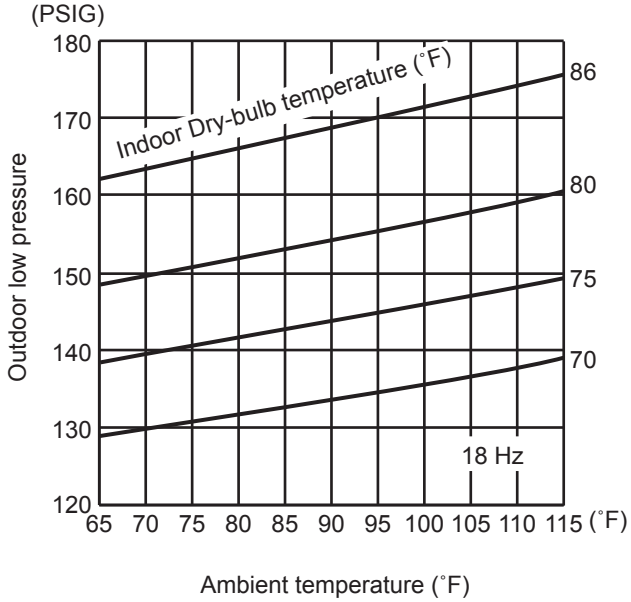

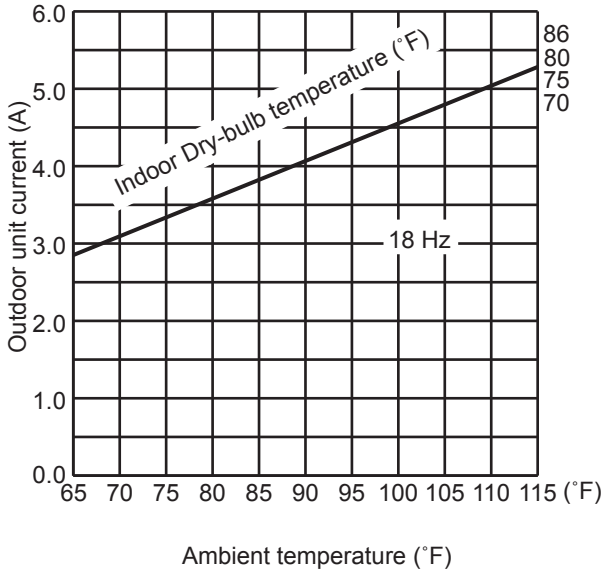

(2) HEAT operation

①Data is based on the condition of outdoor humidity 75%.

②Set air flow to High speed.

③Inverter output frequency is 20 Hz.

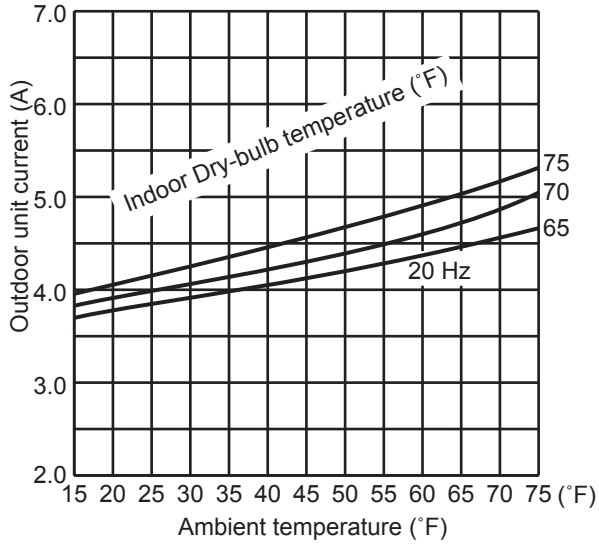

MXZ-5C42NA2 MXZ-3C30NAHZ2

16. 24-class unit in single operation

(1) COOL operation

①Data is based on the condition of indoor humidity 50%

②Air flow speed : High

③Inverter output frequency : 18 Hz

<How to work fixed-frequency operation>

1. Set emergency switch to COOL or HEAT. The switch is located on indoor unit.
2. Press emergency run ON/OFF button.
3. Compressor starts running at 18 Hz (COOL) or 20 Hz (HEAT).
4. Indoor fan runs at High speed and continues for 30 minutes.
5. To cancel this operation, press emergency run ON/OFF button or any button on remote controller.

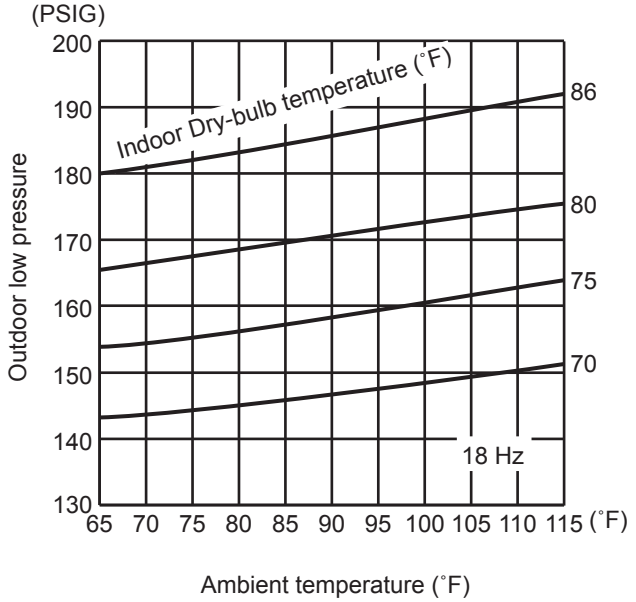

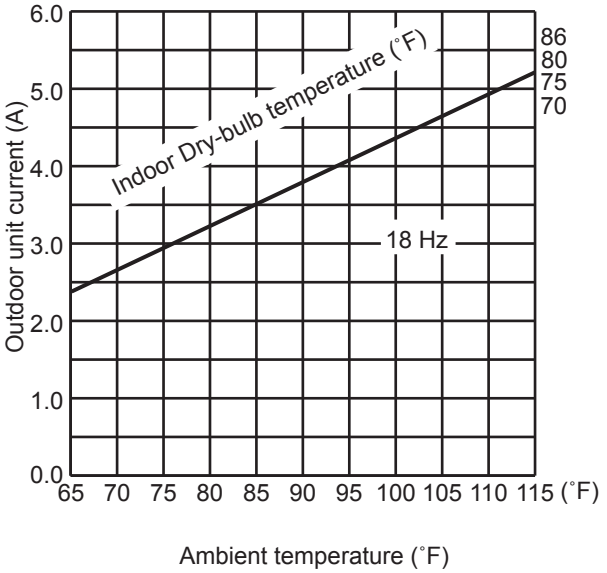

(2) HEAT operation

①Data is based on the condition of outdoor humidity 75%.

②Set air flow to High speed.

③Inverter output frequency is 20 Hz.

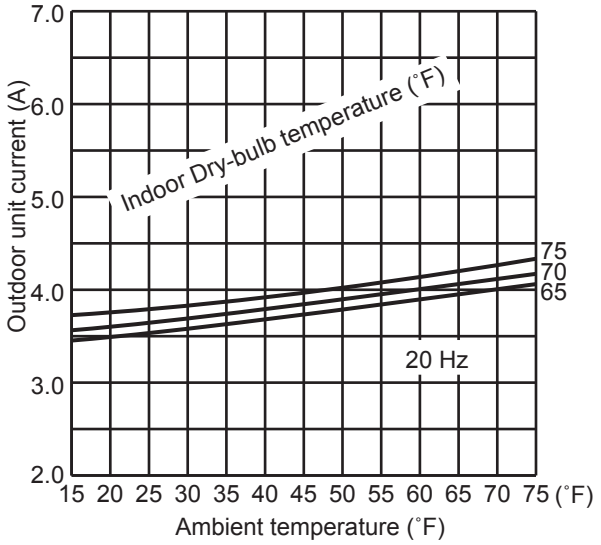

9 NOISE CRITERION CURVES

9-1. OUTDOOR UNIT

MXZ-2C20NA2

FAN SPEED	FUNCTION	SPL(dB(A))	LINE
High	Cooling	50	●——●
High	Heating	54	○——○

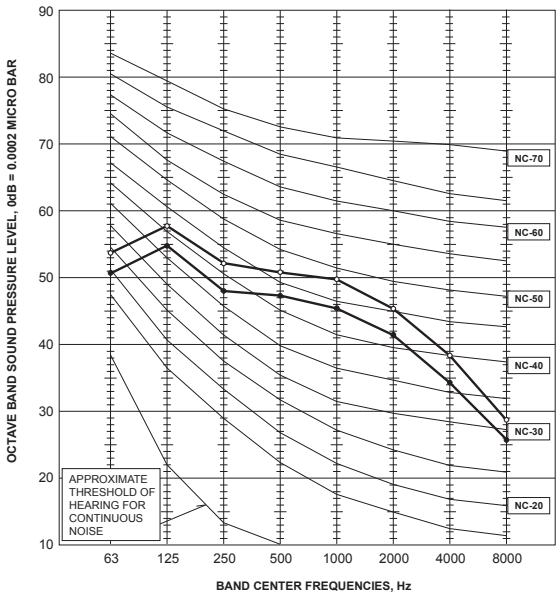

MXZ-3C24NA2

FAN SPEED	FUNCTION	SPL(dB(A))	LINE
High	Cooling	51	●——●
High	Heating	55	○——○

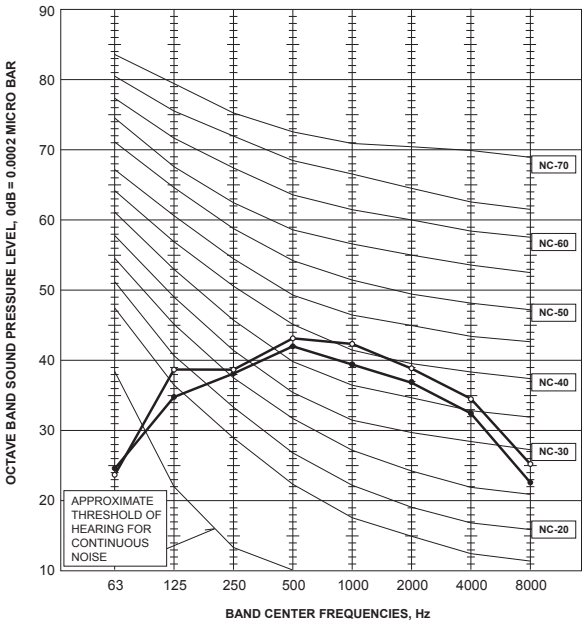

MXZ-3C30NA2

FAN SPEED	FUNCTION	SPL(dB(A))	LINE
High	Cooling	52	●——●
High	Heating	56	○——○

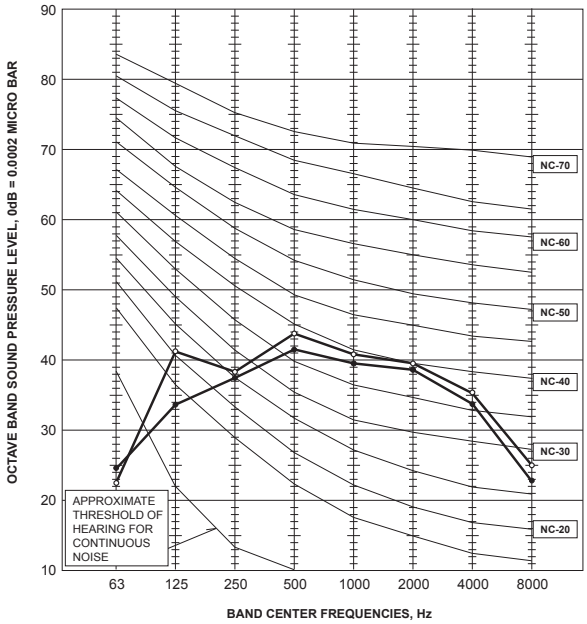

MXZ-4C36NA2

FAN SPEED	FUNCTION	SPL(dB(A))	LINE
High	Cooling	54	●——●
High	Heating	56	○——○

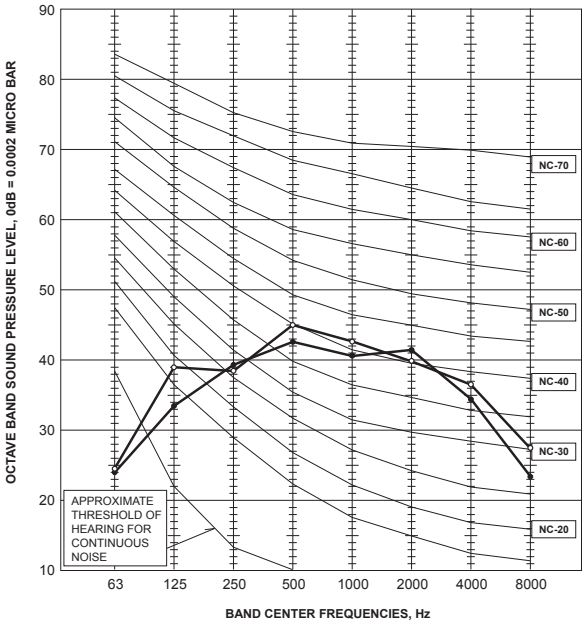

MXZ-5C42NA2

FAN SPEED	FUNCTION	SPL(dB(A))	LINE
High	Cooling	56	●——●
High	Heating	58	○——○

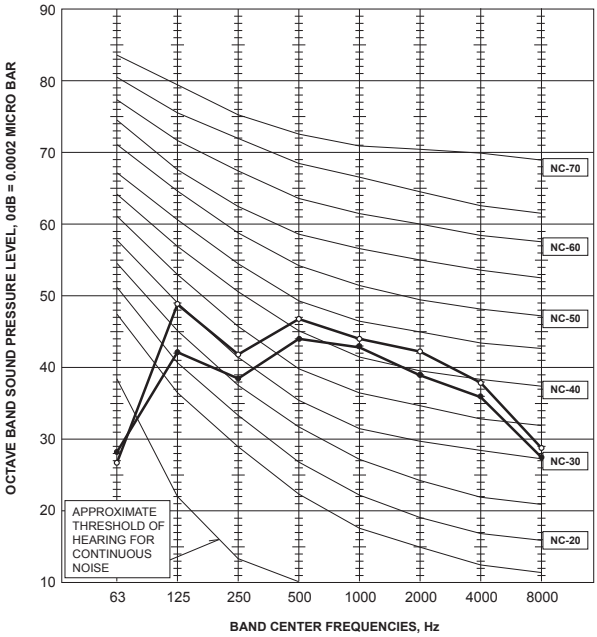

MXZ-2C20NAHZ2

FAN SPEED	FUNCTION	SPL(dB(A))	LINE
High	Cooling	54	●——●
High	Heating	58	○——○

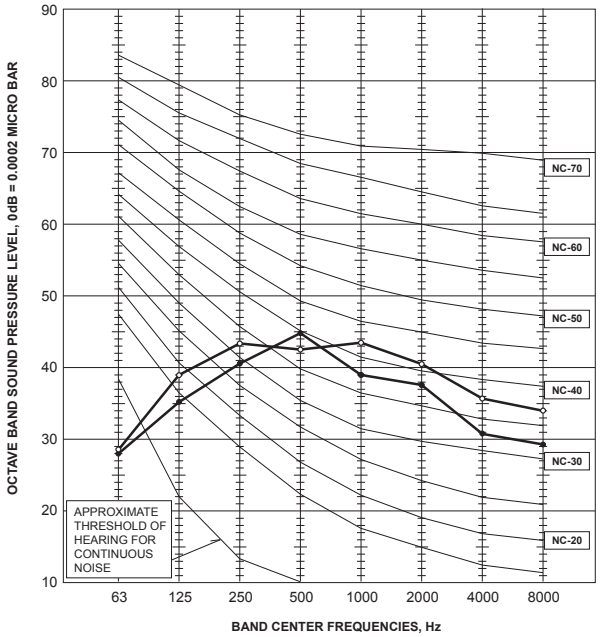

MXZ-3C24NAHZ2

FAN SPEED	FUNCTION	SPL(dB(A))	LINE
High	Cooling	54	●——●
High	Heating	58	○——○

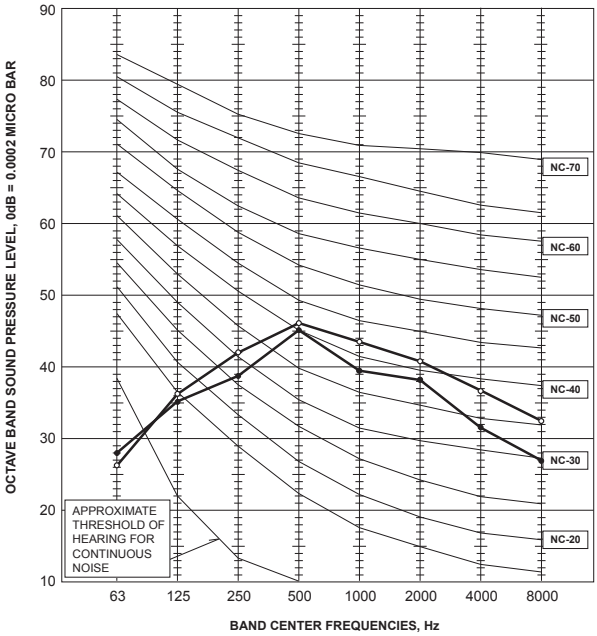

MXZ-3C30NAHZ2

FAN SPEED	FUNCTION	SPL(dB(A))	LINE
High	Cooling	54	●——●
High	Heating	58	○——○

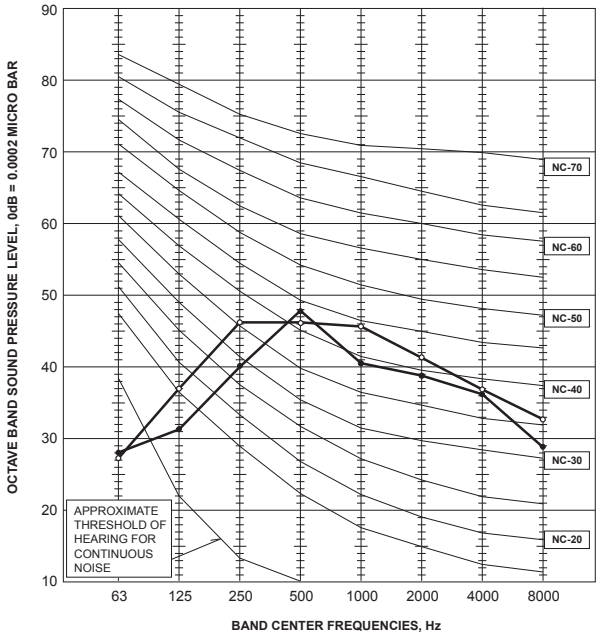

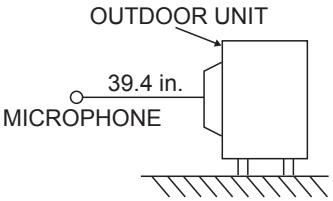

Test conditions

Cooling: Dry-bulb temperature 95°F Wet-bulb temperature 75°F

Heating: Dry-bulb temperature 45°F Wet-bulb temperature 43°F

10 MAX. HEATING CAPACITY IN LOW AMBIENT TEMPERATURE

MXZ-2C20NA2

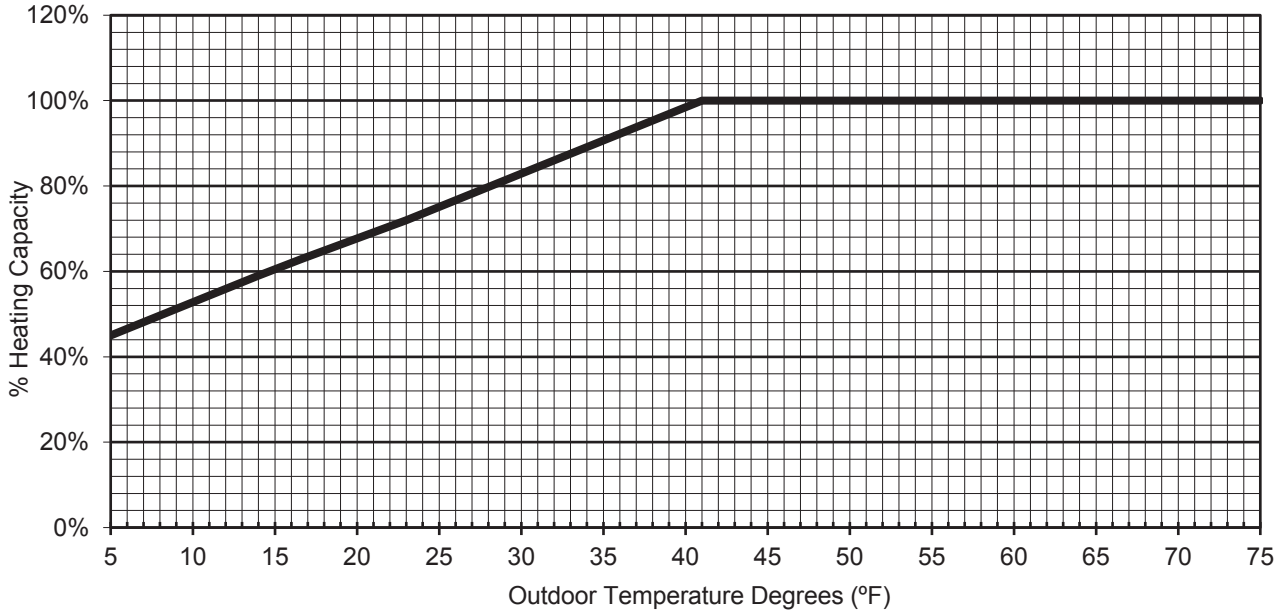

HEATING CAPACITY

Outdoor Temperature Degrees (ºF)	5.0	14.0	23.0	32.0	41.0	41.9	50.0	75.0
% Heating Capacity	45%	59%	72%	86%	100%	100%	100%	100%

MXZ-3C24NA2

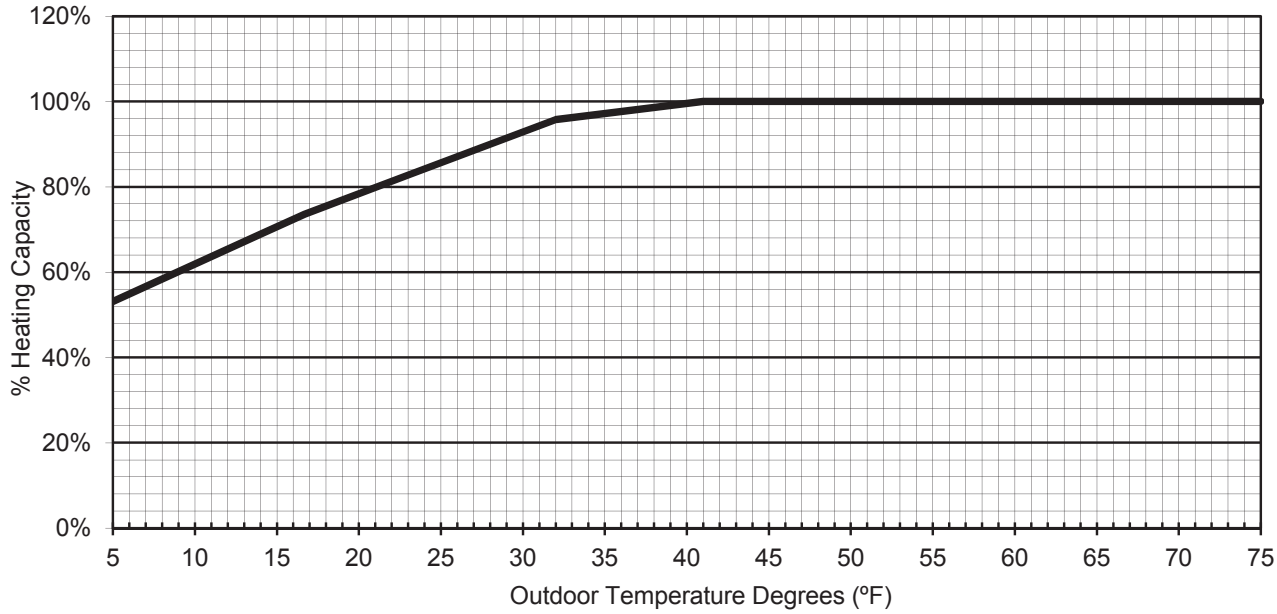

HEATING CAPACITY

Outdoor Temperature Degrees (ºF)	5.0	14.0	23.0	32.0	41.0	50.0	75.0
% Heating Capacity	53%	69%	83%	96%	100%	100%	100%

MXZ-3C30NA2

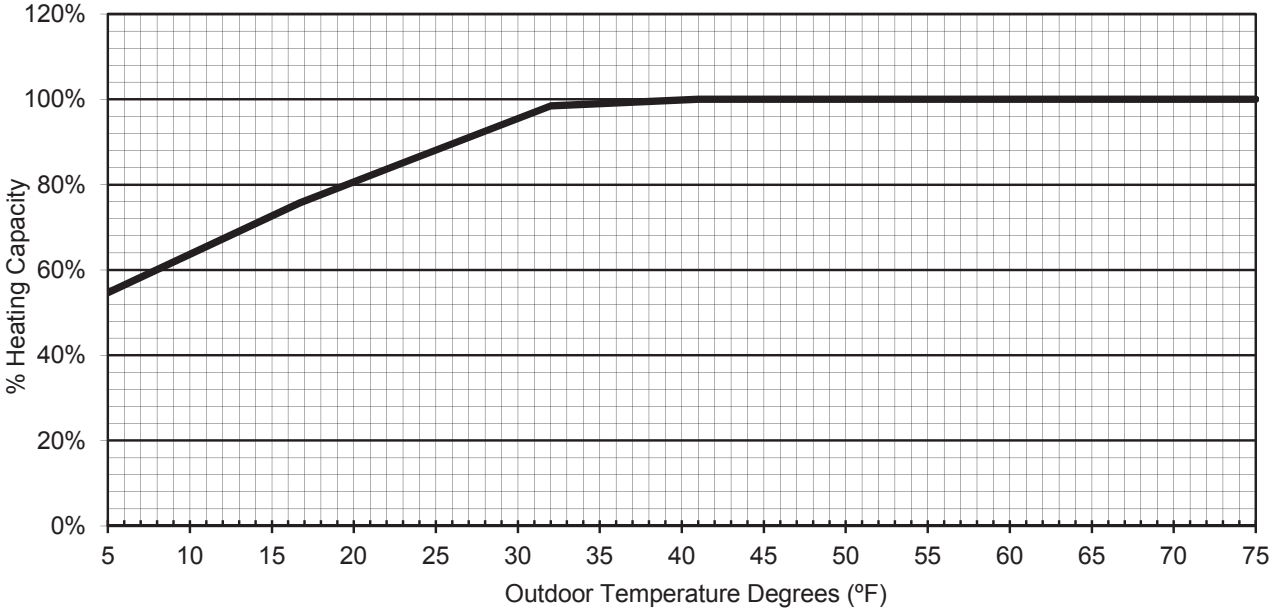

HEATING CAPACITY

Outdoor Temperature Degrees (ºF)	5.0	14.0	23.0	32.0	41.0	50.0	75.0
% Heating Capacity	55%	71%	85%	98%	100%	100%	100%

MXZ-4C36NA2

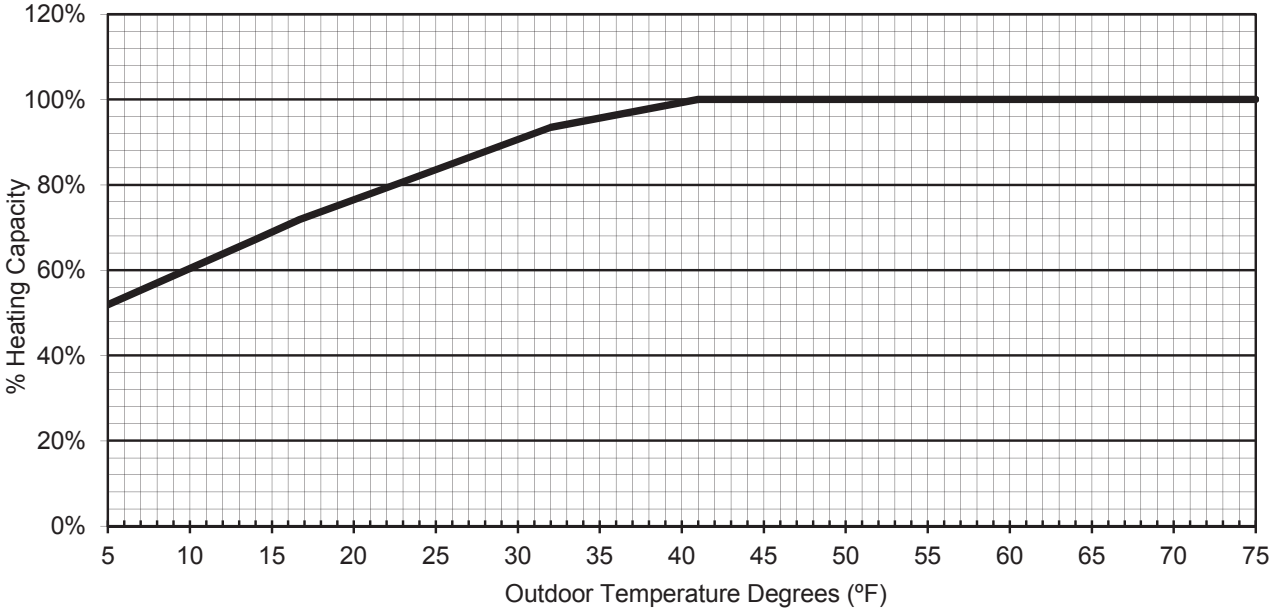

HEATING CAPACITY

Outdoor Temperature Degrees (ºF)	5.0	14.0	23.0	32.0	41.0	50.0	75.0
% Heating Capacity	52%	67%	81%	93%	100%	100%	100%

MXZ-5C42NA2

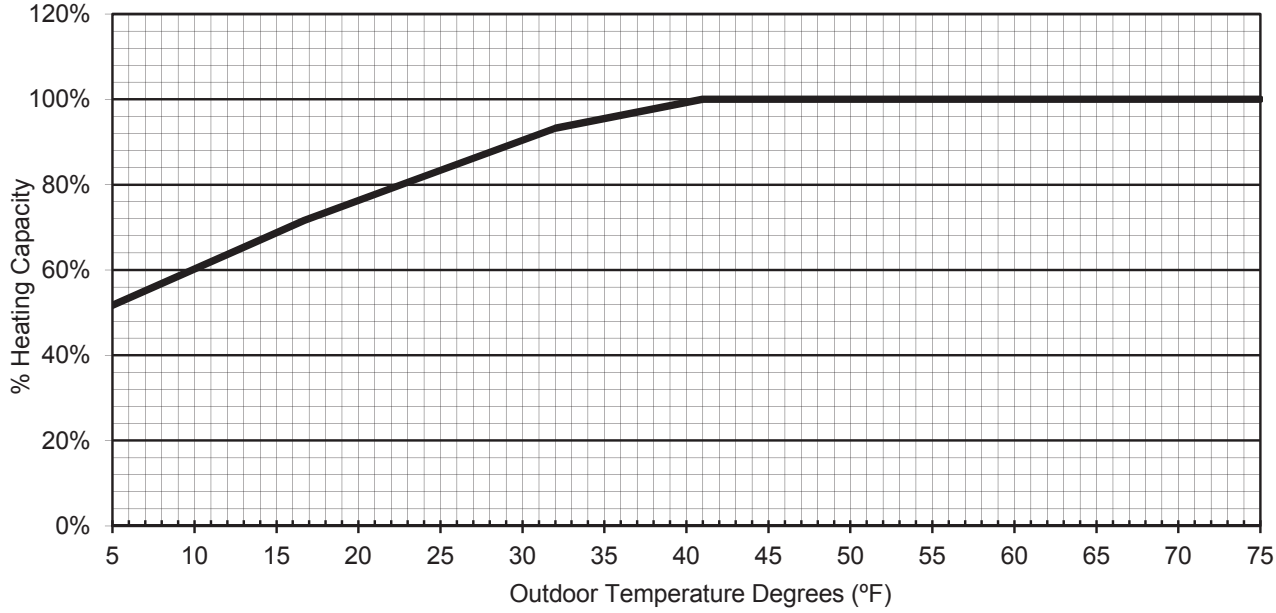

HEATING CAPACITY

Outdoor Temperature Degrees (ºF)	5.0	14.0	23.0	32.0	41.0	50.0	75.0
% Heating Capacity	52%	67%	81%	93%	100%	100%	100%

MXZ-2C20NAHZ2

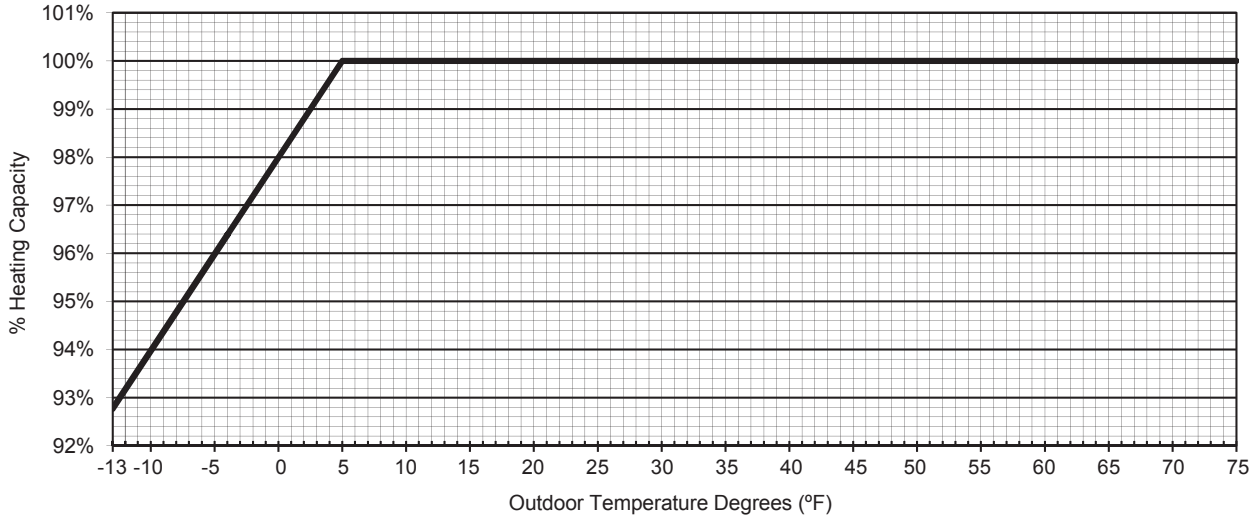

HEATING CAPACITY

Outdoor Temperature Degrees (ºF)	-13.0	-4.0	5.0	14.0	23.0	32.0	41.0	50.0	75.0
% Heating Capacity	93%	96%	100%	100%	100%	100%	100%	100%	100%

MXZ-3C24NAHZ2

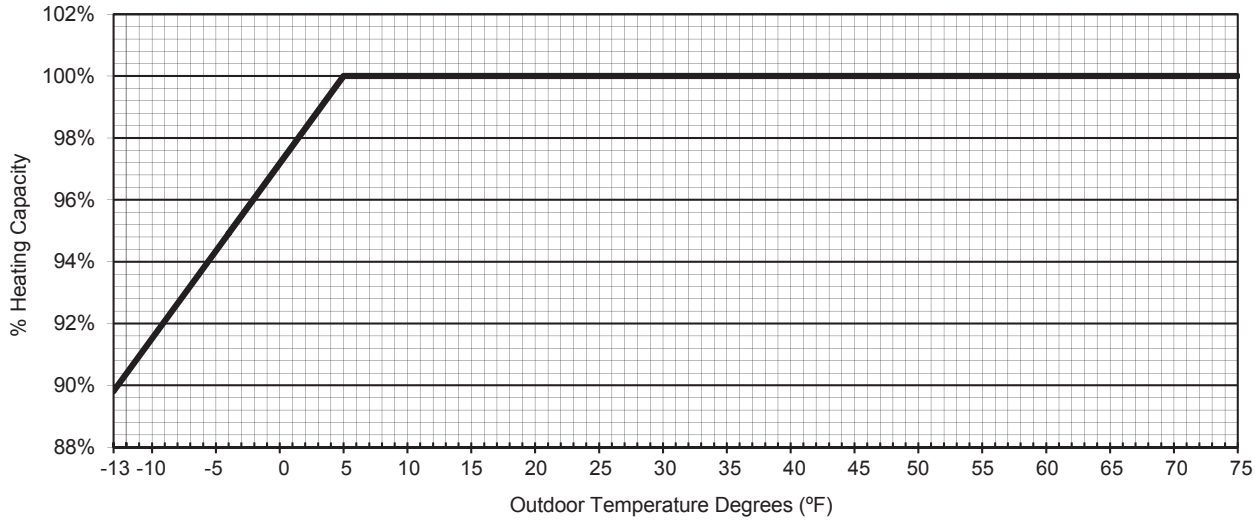

HEATING CAPACITY

Outdoor Temperature Degrees (°F)	-13.0	-4.0	5.0	14.0	23.0	32.0	41.0	50.0	75.0
% Heating Capacity	90%	95%	100%	100%	100%	100%	100%	100%	100%

MXZ-3C30NAHZ2

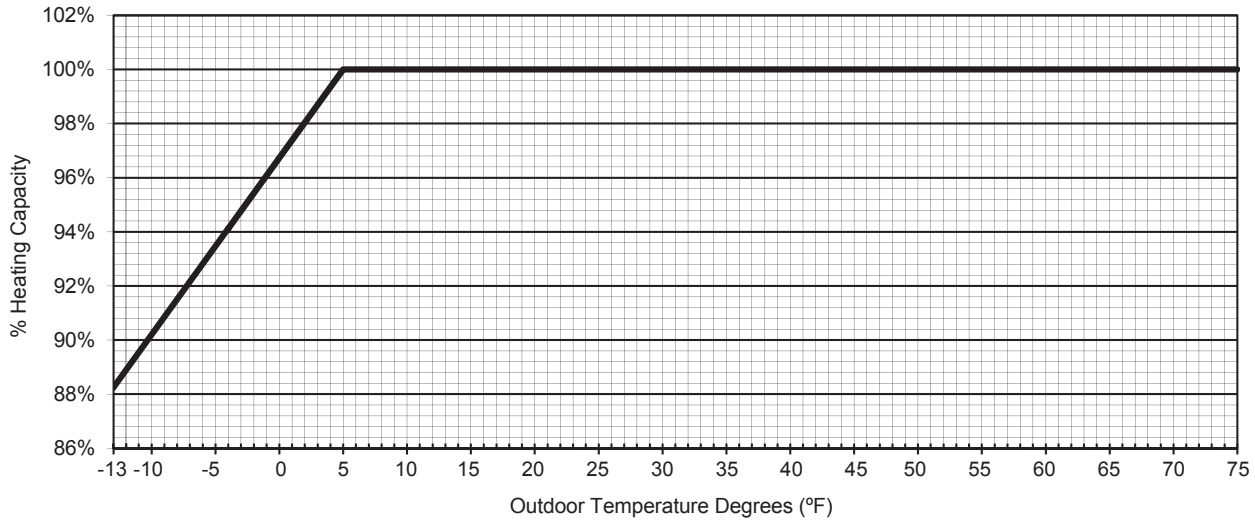

HEATING CAPACITY

Outdoor Temperature Degrees (°F)	-13.0	-4.0	5.0	14.0	23.0	32.0	41.0	50.0	75.0
% Heating Capacity	88%	94%	100%	100%	100%	100%	100%	100%	100%

11 CAPACITY CORRECTION RATIO CURVE FOR PIPING LENGTH

11-1. CAPACITY CORRECTION RATIO CURVE FOR PIPING LENGTH

MXZ-2C20/3C24/30/4C36/5C42NA2
MXZ-2C20/3C24/30NAHZ2

Correction ratio of capacity according to the length of piping (cooling)

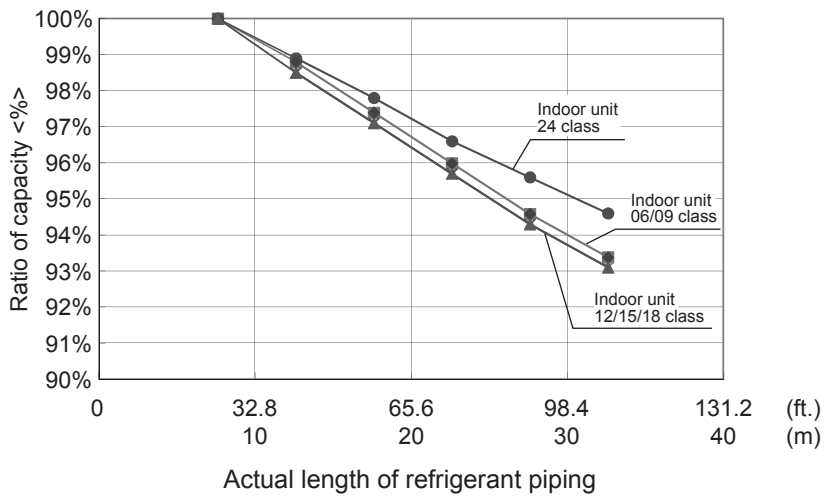

Correction ratio of capacity according to the length of piping (heating)

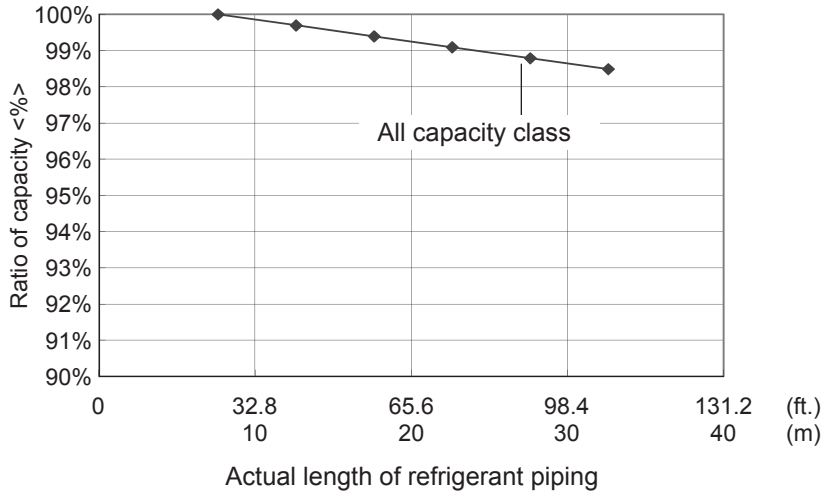

The length intended for the capacity calculation, which counts the length of refrigerant piping and the number of bends, is called actual length.

Length of refrigerant piping (ft.) + (Number of bends × 0.984 ft.) = Actual length of refrigerant piping (ft.)
[Length of refrigerant piping (m) + (Number of bends × 0.3 m) = Actual length of refrigerant piping (m)]

12 STANDARD CAPACITY DIAGRAM

MXZ-2C20NA2

NOTE 1: When 2 or more indoor units are running, the capacity per unit is obtained based on the capacity ratio of their individual operation.

NOTE 2: Input for the indoor unit is excluded.

■Capacity (Cooling - NonDuct)

	1 unit	2 unit
6	6000	
9	9000	
12	12000	12000
15	15000	15000
18		18000
21		20000
24		20000

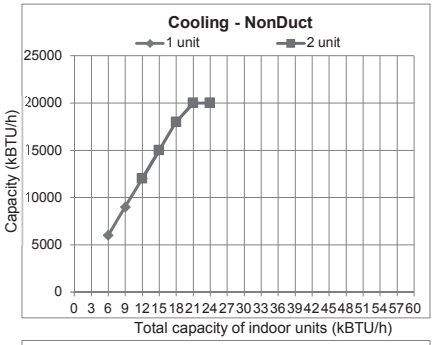

■ Input (Cooling - NonDuct)

	1 unit	2 unit
6	540	
9	670	
12	800	790
15	1060	1035
18		1420
21		1635
24		1605

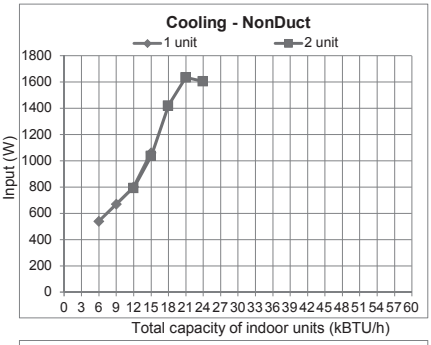

■Capacity (Cooling - Duct)

	1 unit	2 unit
6		
9	9000	
12	12000	
15	15000	
18		18000
21		20000
24		20000

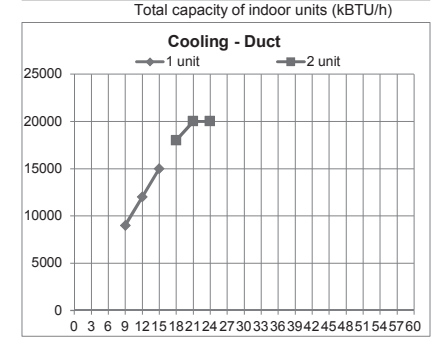

■Input (Cooling - Duct)

	1 unit	2 unit
6		
9	750	
12	1010	
15	1560	
18		1630
21		2000
24		2000

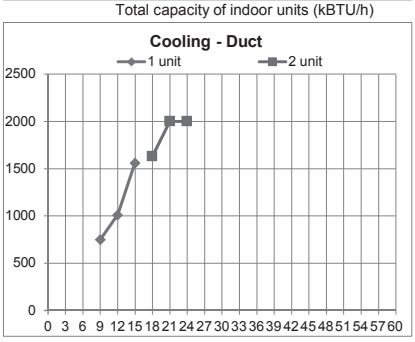

■Current (208V)

	1 unit	2 unit
6	2.6	
9	3.3	
12	4.5	3.8
15	6.4	5.0
18		6.8
21		7.9
24		7.9

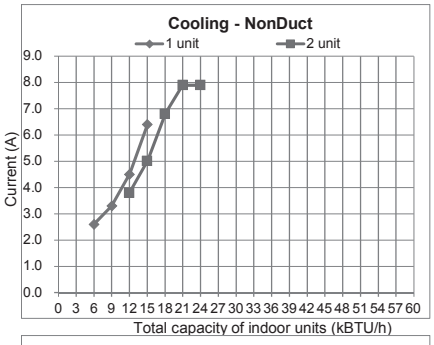

■Current (230V)

	1 unit	2 unit
6	2.3	
9	3.0	
12	4.1	3.4
15	5.8	4.5
18		6.2
21		7.1
24		7.0

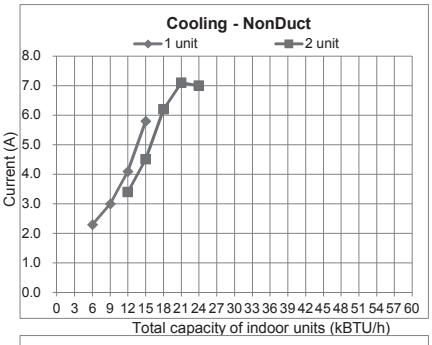

■Current (208V)

	1 unit	2 unit
6		
9	3.4	
12	4.5	
15	7.0	
18		7.8
21		9.6
24		9.6

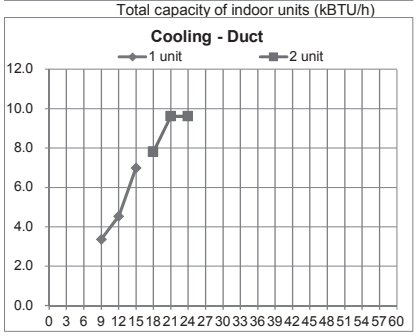

■Current (230V)

	1 unit	2 unit
6		
9	3.0	
12	4.1	
15	6.3	
18		7.1
21		8.7
24		8.7

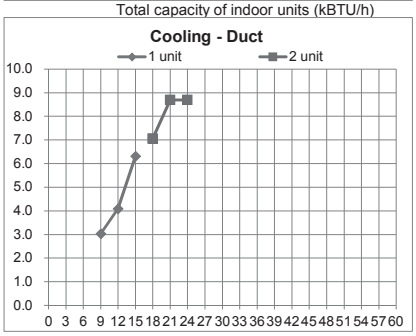

MXZ-2C20NA2

NOTE 1: When 2 or more indoor units are running, the capacity per unit is obtained based on the capacity ratio of their individual operation.

NOTE 2: Input for the indoor unit is excluded.

■Capacity (Heating - NonDuct)

	1 unit	2 unit
6	7400	
9	11000	
12	13600	14800
15	18000	18400
18		21000
21		22000
24		22000

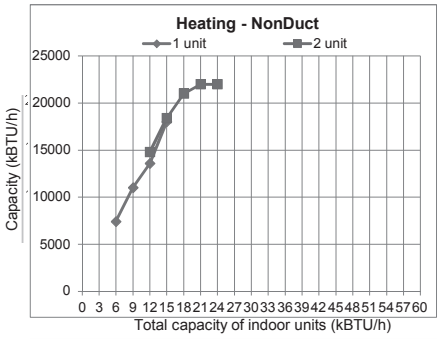

■Input (Heating - NonDuct)

	1 unit	2 unit
6	670	
9	905	
12	1240	1040
15	1715	1370
18		1640
21		1780
24		1780

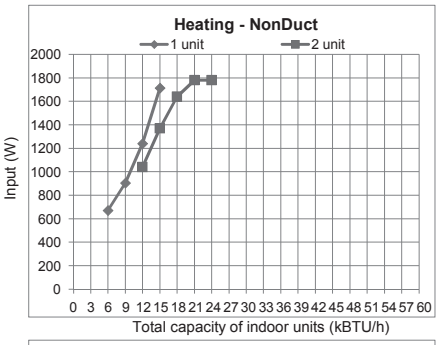

■Capacity (Heating - Duct)

	1 unit	2 unit
6		
9	10900	
12	13600	
15	18000	
18		21800
21		22000
24		22000

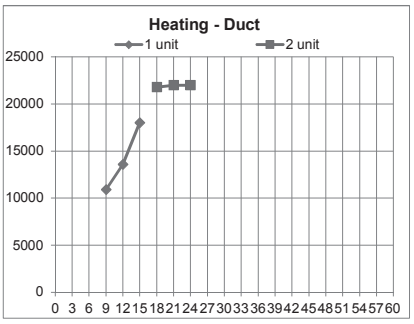

■Input (Heating - Duct)

	1 unit	2 unit
6		
9	1000	
12	1260	
15	1650	
18		1810
21		1770
24		1770

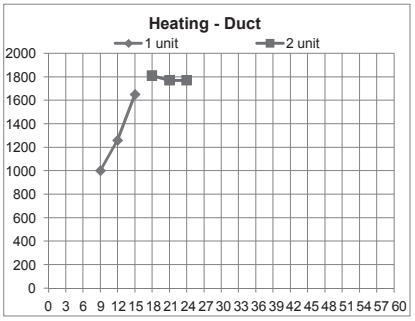

■Current (208V)

	1 unit	2 unit
6	3.3	
9	4.7	
12	6.2	5.1
15	8.9	6.7
18		8.0
21		8.7
24		8.7

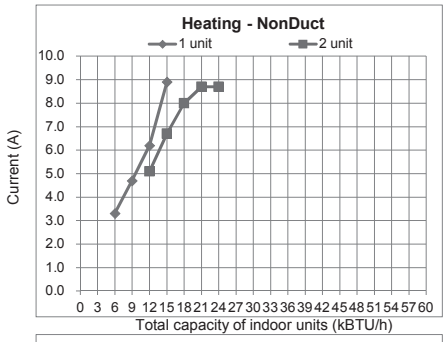

■Current (230V)

	1 unit	2 unit
6	3.0	
9	4.3	
12	5.6	4.6
15	8.1	6.1
18		7.3
21		7.9
24		7.9

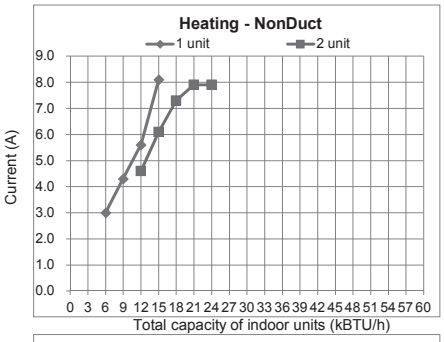

■Current (208V)

	1 unit	2 unit
6		
9	4.6	
12	5.8	
15	8.4	
18		8.7
21		8.6
24		8.6

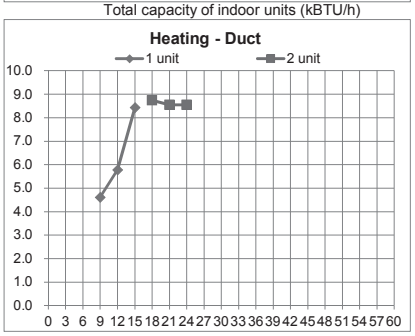

■Current (230V)

	1 unit	2 unit
6		
9	4.2	
12	5.2	
15	7.6	
18		7.9
21		7.7
24		7.7

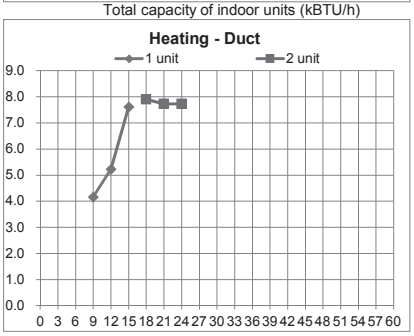

MXZ-3C24NA2

NOTE 1: When 2 or more indoor units are running, the capacity per unit is obtained based on the capacity ratio of their individual operation.

NOTE 2: Input for the indoor unit is excluded.

■ Capacity (Cooling - NonDuct)

	1 unit	2 unit	3 unit
6	6000		
9	9000		
12	12000	12000	
15	14000	15000	
18	17200	18000	18000
21		20000	21000
24		21800	22000
27		21800	24000

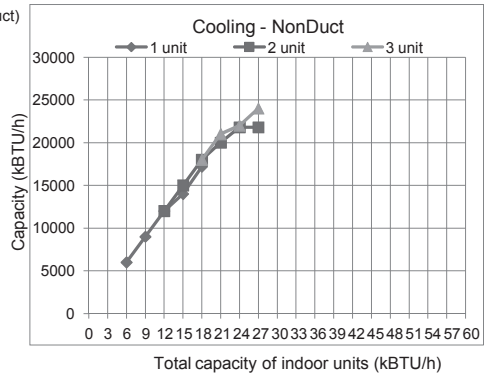

■ Input (Cooling - NonDuct)

	1 unit	2 unit	3 unit
6	870		
9	890		
12	980	960	
15	1020	1000	
18	1440	1420	1320
21		1760	1560
24		2100	1960
27		2080	2310

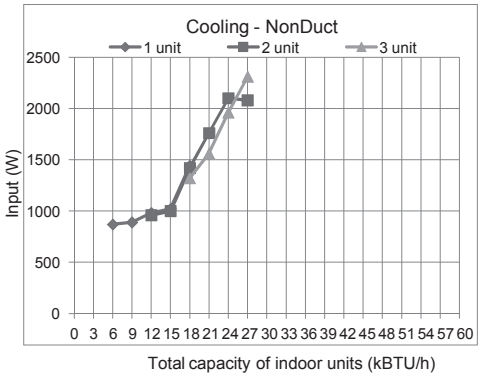

■ Capacity (Cooling - Duct)

	1 unit	2 unit	3 unit
6			
9	9000		
12	12000		
15	15000		
18	17200	18000	
21		21000	
24		21800	
27		21800	23600

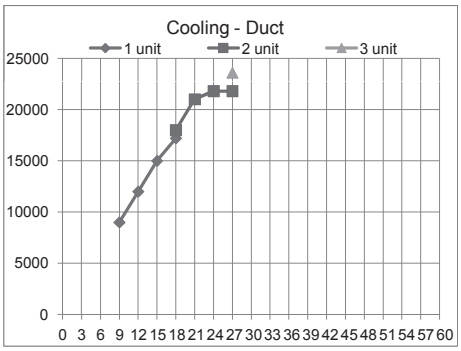

■Input (Cooling - Duct)

	1 unit	2 unit	3 unit
6			
9	940		
12	1070		
15	1370		
18	1770	1750	
21		2040	
24		2300	
27		2260	1920

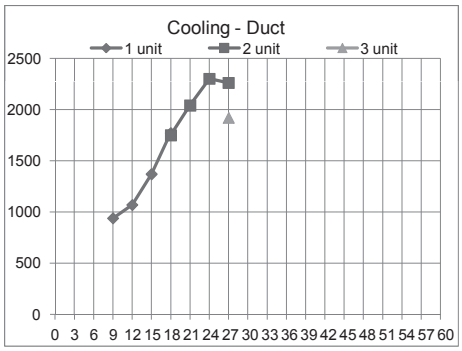

■ Current (208V)

	1 unit	2 unit	3 unit
6	4.4		
9	4.5		
12	5.0	4.8	
15	5.2	5.0	
18	7.3	7.0	6.4
21		8.7	7.6
24		10.4	9.5
27		10.3	11.2

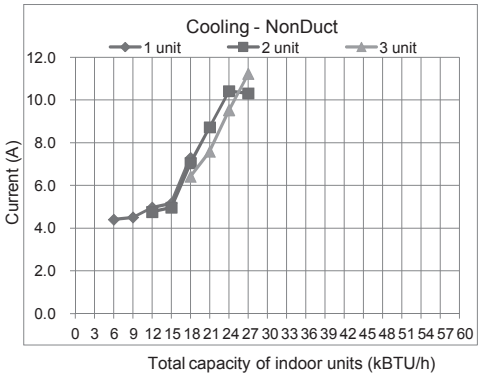

■ Current (230V)

	1 unit	2 unit	3 unit
6	4.0		
9	4.1		
12	4.5	4.3	
15	4.7	4.5	
18	6.6	6.4	5.8
21		7.9	6.9
24		9.4	8.6
27		9.3	10.1

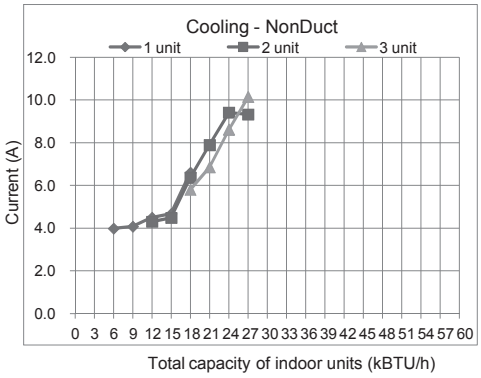

■ Current (208V)

	1 unit	2 unit	3 unit
6			
9	4.8		
12	5.4		
15	6.9		
18	9.0	8.7	
21		10.1	
24		11.4	
27		11.2	9.3

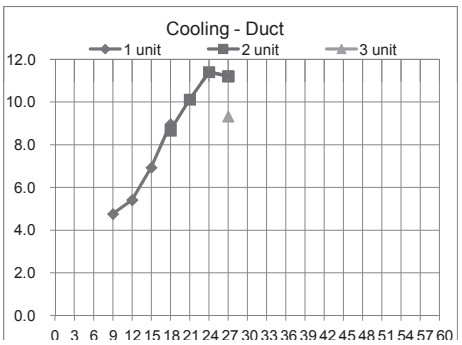

■ Current (230V)

	1 unit	2 unit	3 unit
6			
9	4.3		
12	4.9		
15	6.3		
18	8.1	7.8	
21		9.1	
24		10.3	
27		10.1	8.4

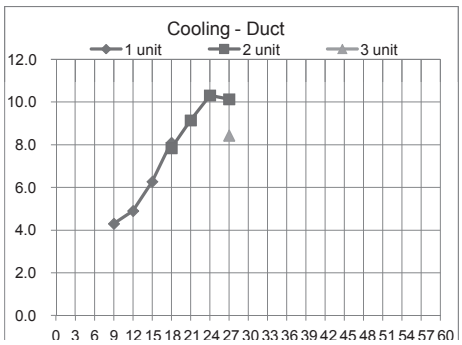

MXZ-3C24NA2

NOTE 1: When 2 or more indoor units are running, the capacity per unit is obtained based on the capacity ratio of their individual operation.

NOTE 2: Input for the indoor unit is excluded.

■ Capacity (Heating - NonDuct)

	1 unit	2 unit	3 unit
6	7400		
9	11000		
12	14400	14800	
15	18000	18400	
18	21600	22000	22200
21		22000	24800
24		24000	25000
27		24000	25000

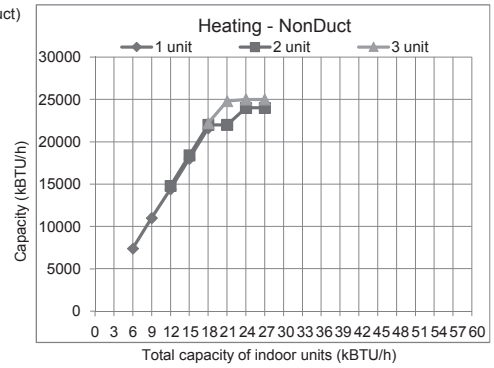

■Input (Heating - NonDuct)

	1 unit	2 unit	3 unit
6	860		
9	950		
12	1210	1020	
15	1600	1300	
18	2000	1600	1540
21		1880	1690
24		2140	1920
27		2100	1880

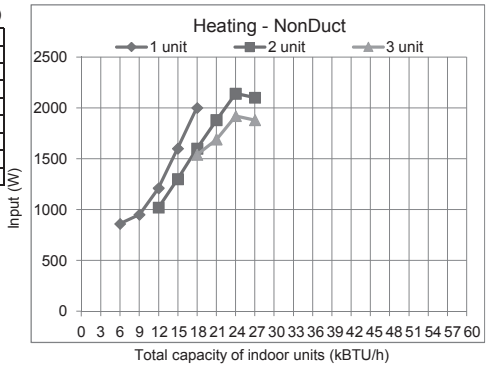

■ Capacity (Heating - Duct)

	1 unit	2 unit	3 unit
6			
9	10900		
12	13600		
15	18000		
18	21600	21800	
21		22000	
24		24000	
27		24000	24600

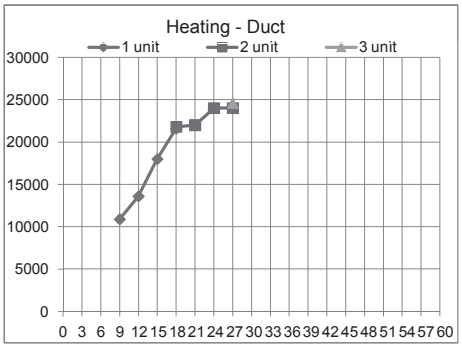

■Input (Heating - Duct)

	1 unit	2 unit	3 unit
6			
9	960		
12	1220		
15	1560		
18	2010	1750	
21		1980	
24		2280	
27		2240	1720

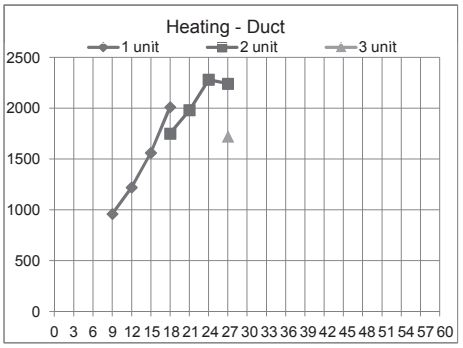

■ Current (208V)

	1 unit	2 unit	3 unit
6	4.4		
9	4.8		
12	6.1	5.1	
15	8.1	6.4	
18	10.1	7.9	7.5
21		9.3	8.2
24		10.6	9.3
27		10.4	9.1

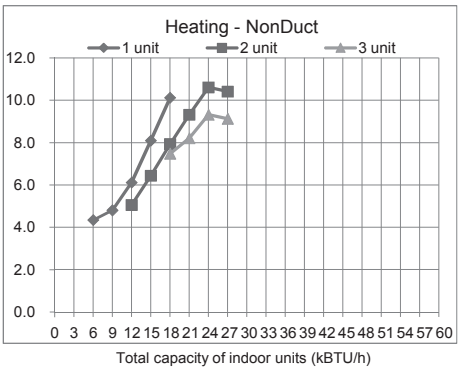

■ Current (230V)

	1 unit	2 unit	3 unit
6	3.9		
9	4.4		
12	5.5	4.6	
15	7.3	5.8	
18	9.2	7.2	6.8
21		8.4	7.4
24		9.6	8.4
27		9.4	8.3

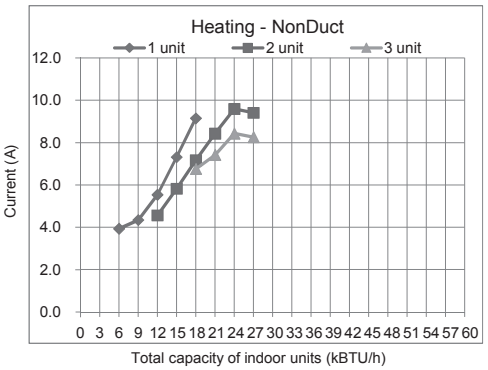

■ Current (208V)

	1 unit	2 unit	3 unit
6			
9	4.9		
12	6.2		
15	7.9		
18	10.2	8.7	
21		9.8	
24		11.3	
27		11.1	8.4

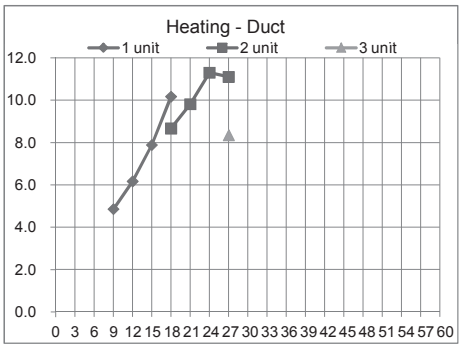

■ Current (230V)

	1 unit	2 unit	3 unit
6			
9	4.4		
12	5.6		
15	7.1		
18	9.2	7.8	
21		8.9	
24		10.2	
27		10.0	7.6

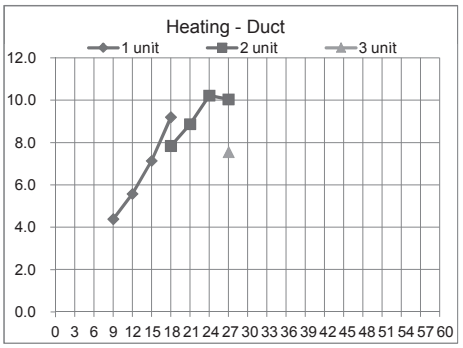

MXZ-3C30NA2

NOTE 1: When 2 or more indoor units are running, the capacity per unit is obtained based on the capacity ratio of their individual operation.

NOTE 2: Input for the indoor unit is excluded.

■ Capacity (Cooling - NonDuct)

	1 unit	2 unit	3 unit
6	6000		
9	9000		
12	12000	12000	
15	14000	15000	
18	17200	18000	18000
21	19800	20000	21000
24	22500	23000	24000
27		25800	26000
30		27200	28400
33		27200	29600
36		27200	30000

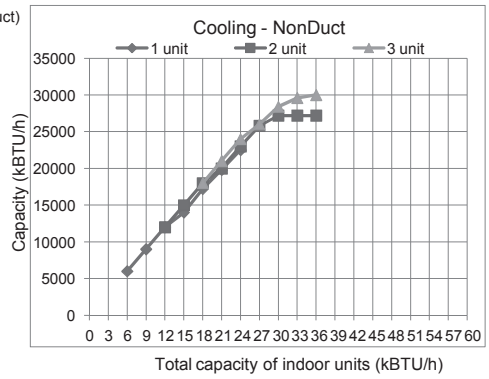

■ Input (Cooling - NonDuct)

	1 unit	2 unit	3 unit
6	870		
9	890		
12	980	960	
15	1020	1000	
18	1440	1420	1320
21	1840	1760	1560
24	2250	2100	1960
27		2420	2310
30		2800	2620
33		2760	2860
36		2720	2900

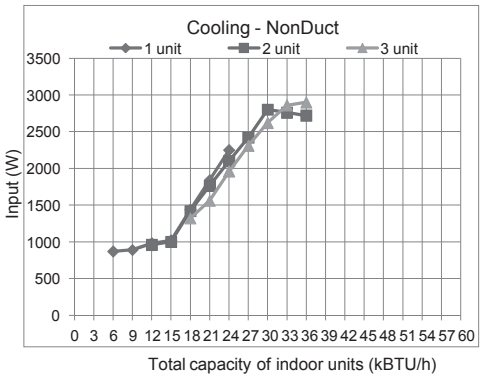

■ Capacity (Cooling - Duct)

	1 unit	2 unit	3 unit
6			
9	9000		
12	12000		
15	15000		
18	17200	18000	
21	20600	21000	
24	24000	24000	
27		26200	27000
30		27200	27400
33		27200	27800
36		27200	28200

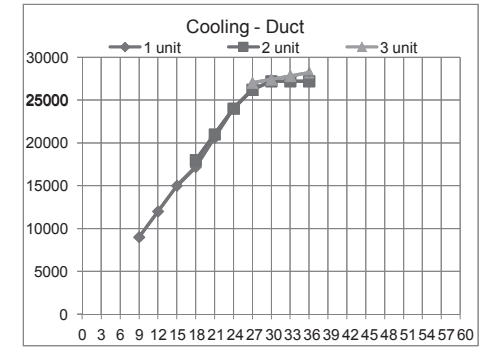

■Input (Cooling - Duct)

	1 unit	2 unit	3 unit
6			
9	940		
12	1070		
15	1370		
18	1770	1750	
21	2110	2040	
24	2360	2300	
27		2560	2410
30		2860	2660
33		2840	2950
36		2820	3170

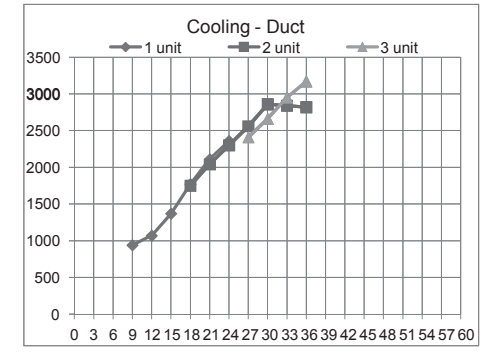

■ Current (208V)

	1 unit	2 unit	3 unit
6	4.4		
9	4.5		
12	5.0	4.8	
15	5.2	5.0	
18	7.3	7.0	6.4
21	9.3	8.7	7.6
24	11.4	10.4	9.5
27		12.0	11.2
30		13.9	12.7
33		13.7	13.9
36		13.5	14.1

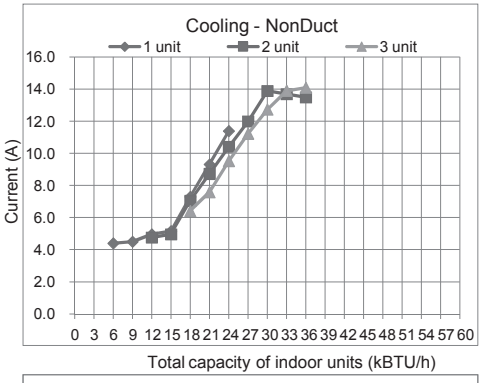

■ Current (230V)

	1 unit	2 unit	3 unit
6	4.0		
9	4.1		
12	4.5	4.3	
15	4.7	4.5	
18	6.6	6.4	5.8
21	8.4	7.9	6.9
24	10.3	9.4	8.6
27		10.9	10.1
30		12.6	11.5
33		12.4	12.6
36		12.2	12.7

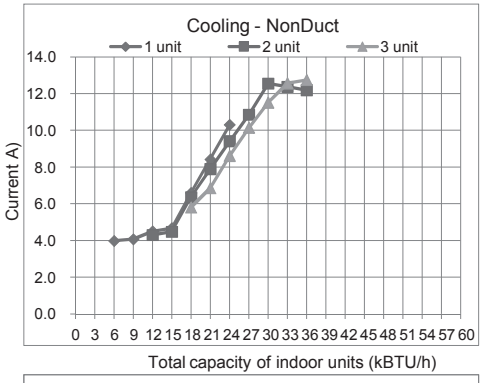

■ Current (208V)

	1 unit	2 unit	3 unit
6			
9	4.8		
12	5.4		
15	6.9		
18	9.0	8.7	
21	10.7	10.1	
24	11.9	11.4	
27		12.7	11.7
30		14.2	12.9
33		14.1	14.3
36		14.0	15.4

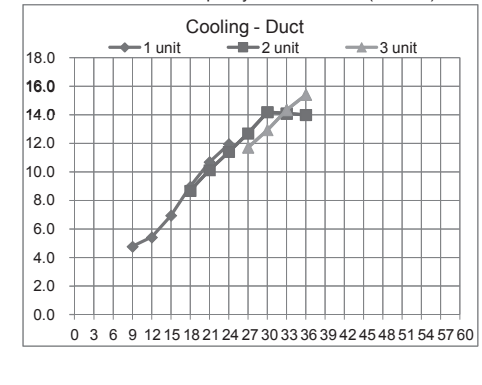

■ Current (230V)

	1 unit	2 unit	3 unit
6			
9	4.3		
12	4.9		
15	6.3		
18	8.1	7.8	
21	9.7	9.1	
24	10.8	10.3	
27		11.5	10.6
30		12.8	11.7
33		12.7	13.0
36		12.6	13.9

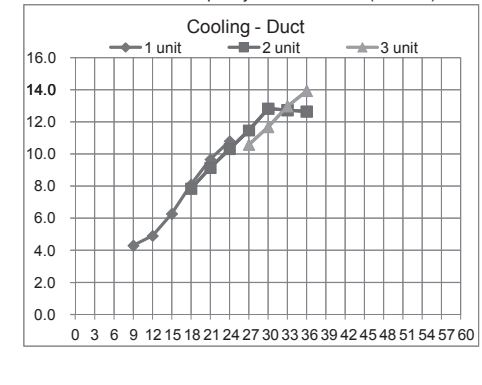

MXZ-3C30NA2

NOTE 1: When 2 or more indoor units are running, the capacity per unit is obtained based on the capacity ratio of their individual operation.

NOTE 2: Input for the indoor unit is excluded.

■ Capacity (Heating - NonDuct)

	1 unit	2 unit	3 unit
6	7400		
9	11000		
12	14400	14800	
15	18000	18400	
18	21600	22000	22200
21	24600	25400	25800
24	27600	27600	28400
27		27600	28400
30		27600	28600
33		27600	29600
36		27600	30000

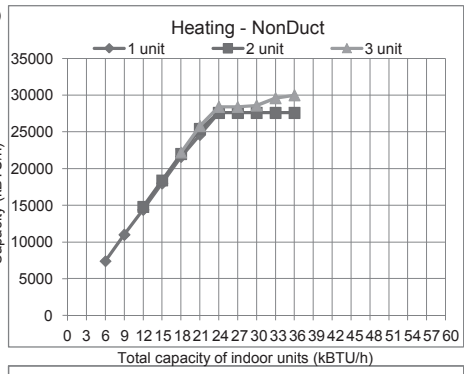

■Input (Heating - NonDuct)

	1 unit	2 unit	3 unit
6	860		
9	950		
12	1210	1020	
15	1600	1300	
18	2000	1600	1540
21	2320	1880	1780
24	2640	2140	1920
27		2100	2020
30		2120	2090
33		2080	2280
36		2040	2340

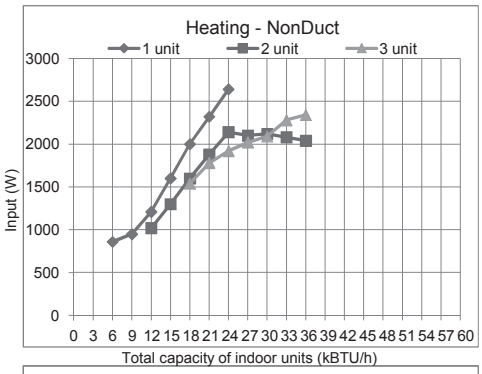

■ Capacity (Heating - Duct)

	1 unit	2 unit	3 unit
6			
9	10900		
12	13600		
15	18000		
18	21600	21800	
21	23800	24500	
24	26000	27200	
27		27400	27400
30		27400	27600
33		27400	27800
36		27400	28000

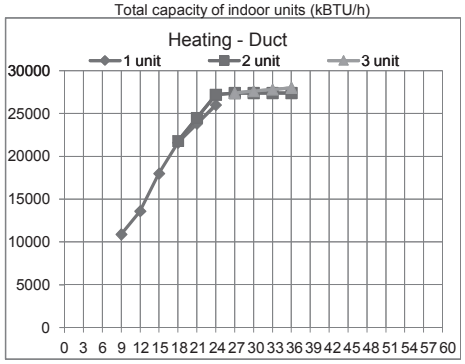

■Input (Heating - Duct)

	1 unit	2 unit	3 unit
6			
9	960		
12	1220		
15	1560		
18	2010	1750	
21	2450	1980	
24	2710	2150	
27		2240	2020
30		2160	2060
33		2120	2160
36		2080	2120

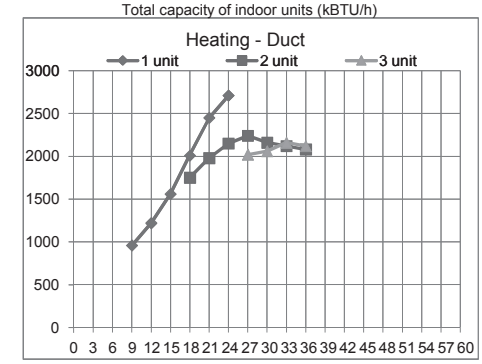

■ Current (208V)

	1 unit	2 unit	3 unit
6	4.4		
9	4.8		
12	6.1	5.1	
15	8.1	6.4	
18	10.1	7.9	7.5
21	11.7	9.3	8.6
24	13.4	10.6	9.3
27		10.4	9.8
30		10.5	10.2
33		10.3	11.1
36		10.1	11.4

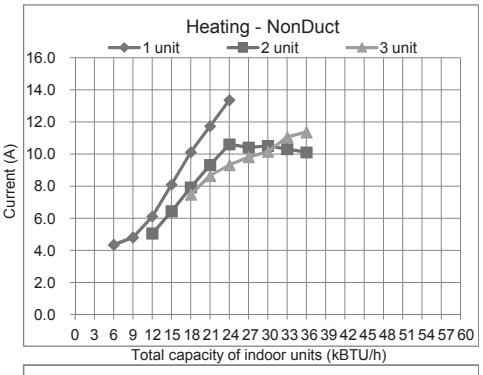

■ Current (230V)

	1 unit	2 unit	3 unit
6	3.9		
9	4.4		
12	5.5	4.6	
15	7.3	5.8	
18	9.2	7.2	6.8
21	10.6	8.4	7.8
24	12.1	9.6	8.4
27		9.4	8.9
30		9.5	9.2
33		9.3	10.0
36		9.1	10.3

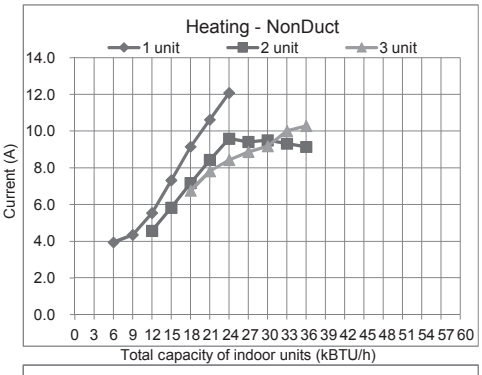

■ Current (208V)

	1 unit	2 unit	3 unit
6			
9	4.9		
12	6.2		
15	7.9		
18	10.2	8.7	
21	12.4	9.8	
24	13.7	10.7	
27		11.1	9.8
30		10.7	10.0
33		10.5	10.5
36		10.3	10.3

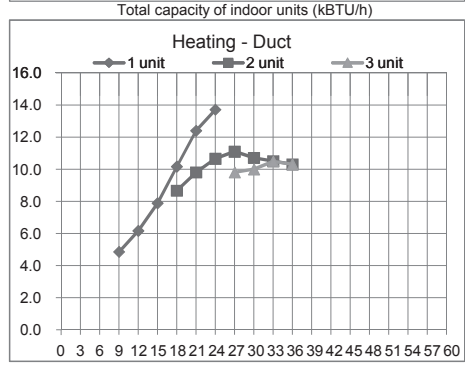

■ Current (230V)

	1 unit	2 unit	3 unit
6			
9	4.4		
12	5.6		
15	7.1		
18	9.2	7.8	
21	11.2	8.9	
24	12.4	9.6	
27		10.0	8.9
30		9.7	9.1
33		9.5	9.5
36		9.3	9.3

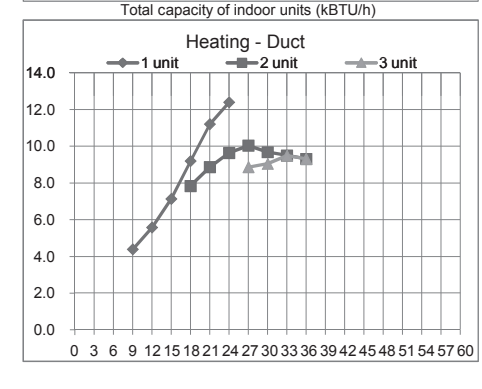

MXZ-4C36NA2

NOTE 1: When 2 or more indoor units are running, the capacity per unit is obtained based on the capacity ratio of their individual operation.

NOTE 2: Input for the indoor unit is excluded.

■ Capacity (Cooling - NonDuct)

	1 unit	2 unit	3 unit	4 unit
6	6000			
9	9000			
12	12000	12000		
15	14000	15000		
18	17200	18000	18000	
21	19800	20000	21000	
24	22500	23000	24000	24000
27		25800	26000	27000
30		28000	28400	30000
33		28000	32000	32000
36		28000	32000	35400
39			32000	36000
42			32000	36000

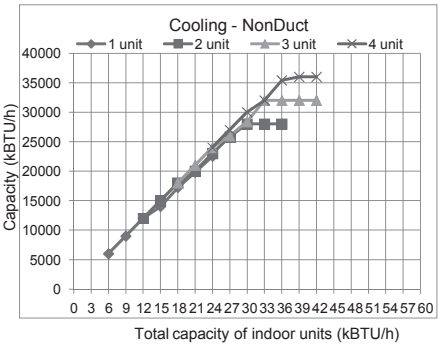

■ Input (Cooling - NonDuct)

	1 unit	2 unit	3 unit	4 unit
6	870			
9	890			
12	980	960		
15	1020	1000		
18	1440	1420	1320	
21	1840	1760	1560	
24	2250	2100	1960	1940
27		2420	2310	2300
30		2800	2620	2790
33		2760	2860	3210
36		2720	2970	3680
39			3070	3720
42			3030	3700

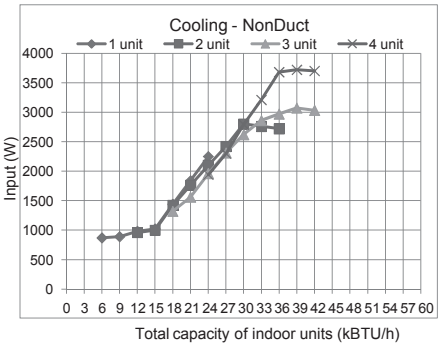

■ Capacity (Cooling - Duct)

	1 unit	2 unit	3 unit	4 unit
6				
9	9000			
12	12000			
15	15000			
18	17200	18000		
21	20600	21000		
24	24000	24000		
27		26200	27000	
30		28000	30000	
33		28000	32000	
36		28000	32000	34400
39			32000	34800
42			32000	35200

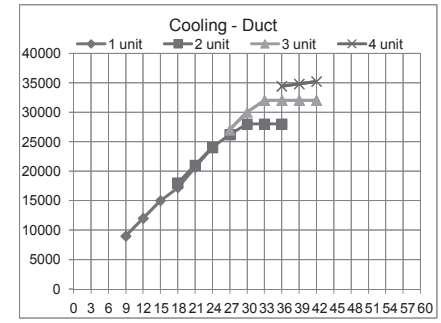

■Input (Cooling - Duct)

	1 unit	2 unit	3 unit	4 unit
6				
9	940			
12	1070			
15	1370			
18	1770	1750		
21	2110	2040		
24	2360	2300		
27		2560	2410	
30		2880	2920	
33		2860	3080	
36		2840	3250	3700
39			3210	3700
42			3170	3700

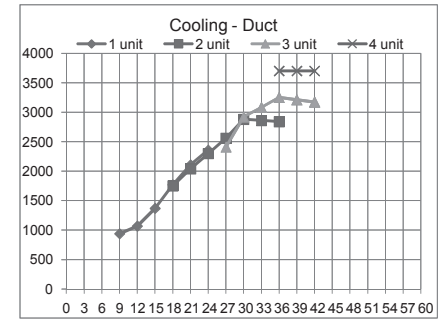

■ Current (208V)

	1 unit	2 unit	3 unit	4 unit
6	4.4			
9	4.5			
12	5.0	4.8		
15	5.2	5.0		
18	7.3	7.0	6.5	
21	9.3	8.7	7.7	
24	11.4	10.4	9.7	9.4
27		12.0	11.5	11.2
30		13.9	13.0	13.6
33		13.7	14.2	15.6
36		13.5	14.7	17.9
39			15.2	18.1
42			15.0	18.0

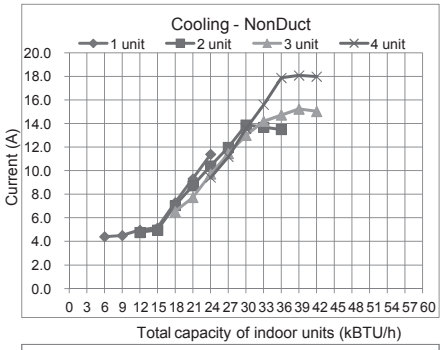

■ Current (230V)

	1 unit	2 unit	3 unit	4 unit
6	4.0			
9	4.1			
12	4.5	4.3		
15	4.7	4.5		
18	6.6	6.4	5.9	
21	8.4	7.9	7.0	
24	10.3	9.4	8.8	8.5
27		10.9	10.4	10.1
30		12.6	11.7	12.3
33		12.4	12.8	14.1
36		12.2	13.3	16.2
39			13.8	16.3
42			13.6	16.3

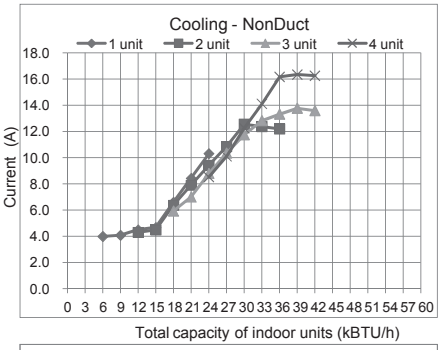

■ Current (208V)

	1 unit	2 unit	3 unit	4 unit
6				
9	4.8			
12	5.4			
15	6.9			
18	9.0	8.7		
21	10.7	10.1		
24	11.9	11.4		
27		12.7	11.9	
30		14.3	14.5	
33		14.2	15.3	
36		14.1	16.1	18.0
39			15.9	18.0
42			15.7	18.0

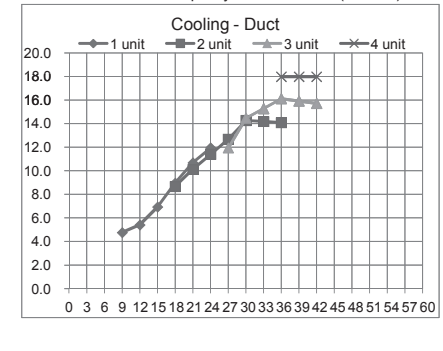

■ Current (230V)

	1 unit	2 unit	3 unit	4 unit
6				
9	4.3			
12	4.9			
15	6.3			
18	8.1	7.8		
21	9.7	9.1		
24	10.8	10.3		
27		11.5	10.8	
30		12.9	13.1	
33		12.8	13.8	
36		12.7	14.6	16.3
39			14.4	16.3
42			14.2	16.3

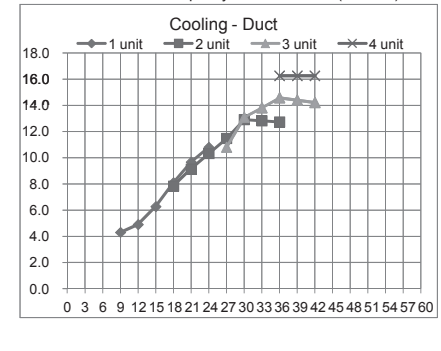

MXZ-4C36NA2

NOTE 1: When 2 or more indoor units are running, the capacity per unit is obtained based on the capacity ratio of their individual operation.

NOTE 2: Input for the indoor unit is excluded.

■ Capacity (Heating - NonDuct)

	1 unit	2 unit	3 unit	4 unit
6	7400			
9	11000			
12	14400	14800		
15	18000	18400		
18	21600	22000	22200	
21	24600	25400	25800	
24	27600	28000	29200	29600
27		28000	32800	33200
30		28000	32800	35800
33		28000	32800	35800
36		28000	32800	36000
39			32800	36000
42			32800	36000

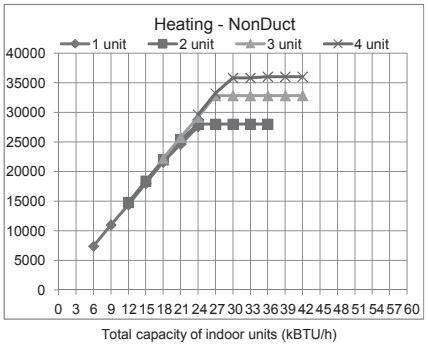

■Input (Heating - NonDuct)

	1 unit	2 unit	3 unit	4 unit
6	860			
9	950			
12	1210	1020		
15	1600	1300		
18	2000	1600	1540	
21	2320	1880	1780	
24	2640	2250	2180	2240
27		2230	2340	2440
30		2210	2300	2600
33		2190	2260	2860
36		2170	2240	2940
39			2200	2910
42			2160	2880

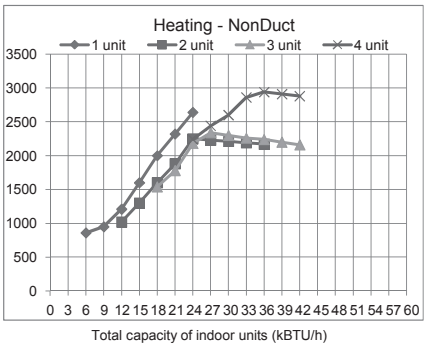

■ Capacity (Heating - Duct)

	1 unit	2 unit	3 unit	4 unit
6				
9	10900			
12	13600			
15	18000			
18	21600	21800		
21	23800	24500		
24	26000	27200		
27		28000	32700	
30		28000	32700	
33		28000	32700	
36		28000	32700	34400
39			32700	34800
42			32700	35200

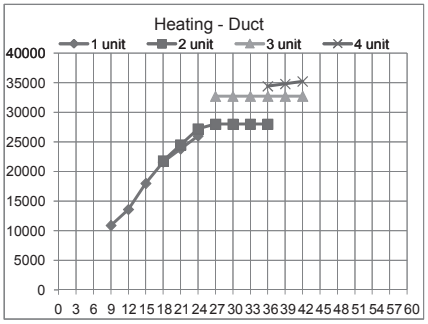

■Input (Heating - Duct)

	1 unit	2 unit	3 unit	4 unit
6				
9	960			
12	1220			
15	1560			
18	2010	1750		
21	2450	1980		
24	2710	2150		
27		2350	2480	
30		2320	2440	
33		2290	2400	
36		2260	2360	2860
39			2320	2920
42			2280	2940

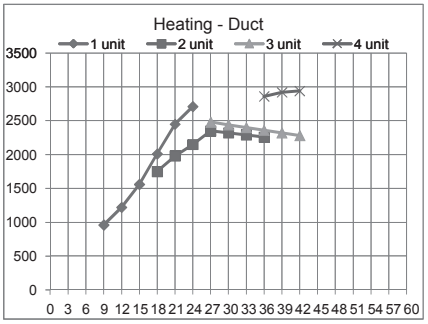

■ Current (208V)

	1 unit	2 unit	3 unit	4 unit
6	4.4			
9	4.8			
12	6.1	5.1		
15	8.1	6.4		
18	10.1	7.9	7.6	
21	11.7	9.3	8.8	
24	13.4	11.2	10.8	10.9
27		11.1	11.6	11.9
30		11.0	11.4	12.6
33		10.9	11.2	13.9
36		10.8	11.1	14.3
39			10.9	14.1
42			10.7	14.0

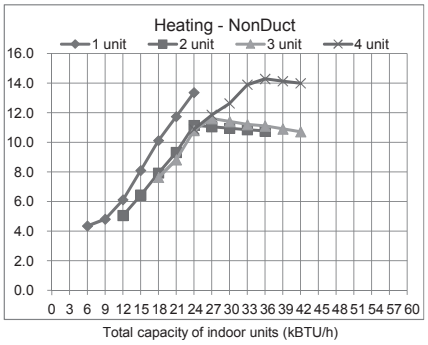

■ Current (230V)

	1 unit	2 unit	3 unit	4 unit
6	3.9			
9	4.4			
12	5.5	4.6		
15	7.3	5.8		
18	9.2	7.2	6.9	
21	10.6	8.4	8.0	
24	12.1	10.1	9.8	9.8
27		10.0	10.5	10.7
30		9.9	10.3	11.4
33		9.8	10.1	12.6
36		9.7	10.0	12.9
39			9.9	12.8
42			9.7	12.7

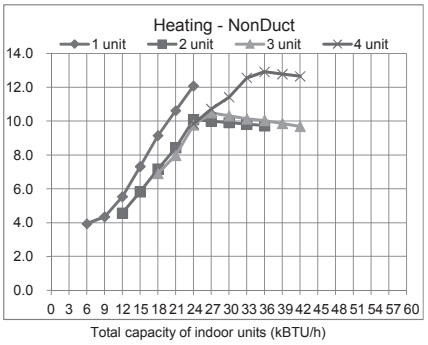

■ Current (208V)

	1 unit	2 unit	3 unit	4 unit
6				
9	4.9			
12	6.2			
15	7.9			
18	10.2	8.7		
21	12.4	9.8		
24	13.7	10.7		
27		11.7	12.3	
30		11.5	12.1	
33		11.4	11.9	
36		11.2	11.7	13.9
39			11.5	14.2
42			11.3	14.3

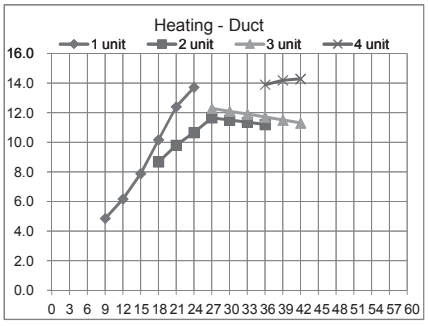

■ Current (230V)

	1 unit	2 unit	3 unit	4 unit
6				
9	4.4			
12	5.6			
15	7.1			
18	9.2	7.8		
21	11.2	8.9		
24	12.4	9.6		
27		10.5	11.1	
30		10.4	10.9	
33		10.3	10.8	
36		10.1	10.6	12.6
39			10.4	12.8
42			10.2	12.9

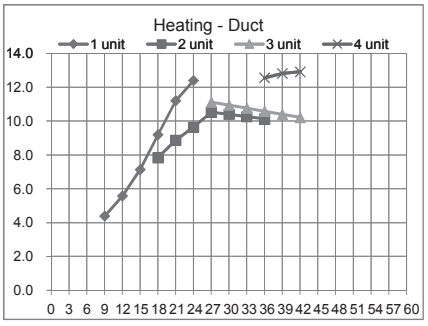

MXZ-5C42NA2

NOTE 1: When 2 or more indoor units are running, the capacity per unit is obtained based on the capacity ratio of their individual operation.

NOTE 2: Input for the indoor unit is excluded.

■Capacity (Cooling - NonDuct)

	1 unit	2 unit	3 unit	4 unit	5 unit
6	6000				
9	9000				
12	12000	12000			
15	14000	15000			
18	17200	18000	18000		
21	19800	20000	21000		
24	22500	23000	24000	24000	
27		25800	26000	27000	
30		28000	29000	30000	30000
33		28000	32000	32000	33000
36		28000	32600	35400	36000
39		29000	32600	38000	38000
42		29000	32600	38000	40500
45		30000	32600	38000	41600
48		30000	32600	38000	41600
51			32600	38000	41600

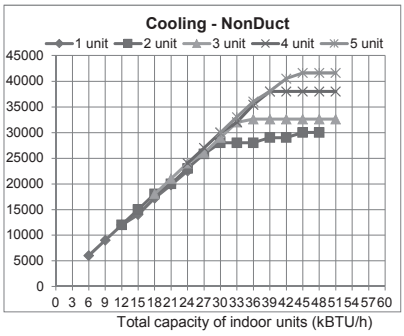

■Input (Cooling - NonDuct)

	1 unit	2 unit	3 unit	4 unit	5 unit
6	910				
9	930				
12	1020	950			
15	1200	1030			
18	1480	1300	1200		
21	1880	1700	1360		
24	2290	2150	1800	1720	
27		2450	2250	2160	
30		2600	2400	2520	2470
33		2600	2850	3100	2950
36		2600	2900	3650	3500
39		2650	2860	4100	3900
42		2650	2820	4000	4300
45		2700	2780	3900	4360
48		2650	2740	3800	4300
51			2720	3700	4250

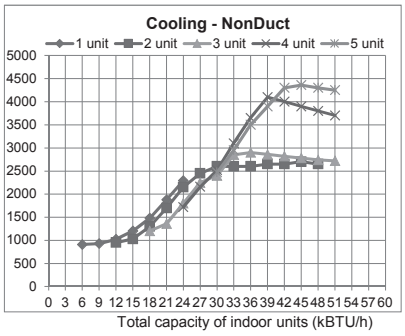

■Capacity (Cooling - Duct)

	1 unit	2 unit	3 unit	4 unit	5 unit
6					
9	9000				
12	12000				
15	15000				
18	17200	18000			
21	20600	21000			
24	24000	24000			
27		26200	27000		
30		28000	30000		
33		28000	32000		
36		28000	32000	34400	
39		29000	32000	34800	
42		29000	32000	35800	
45		30000	32000	35800	37500
48		30000	32000	37200	39000
51			32000	37200	40000

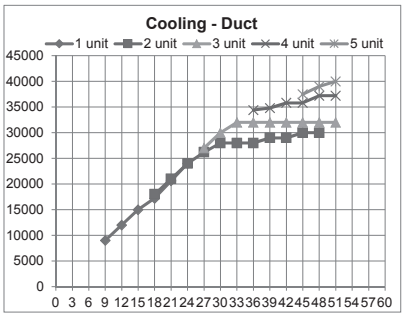

■Input (Cooling - Duct)

	1 unit	2 unit	3 unit	4 unit	5 unit
6					
9	980				
12	1150				
15	1450				
18	1850	1820			
21	2150	2000			
24	2400	2300			
27		2550	2360		
30		2850	2600		
33		2850	2800		
36		2850	2780	3160	
39		2800	2760	3250	
42		2840	2740	3300	
45		2900	2720	3300	3810
48		2850	2700	3300	3960
51			2680	3300	4020

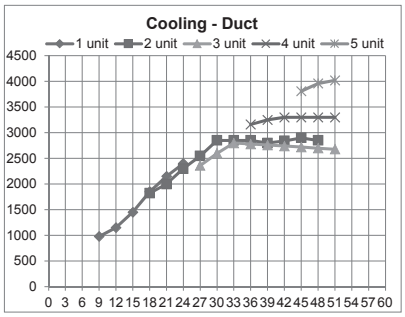

■ Current (208V)

	1 unit	2 unit	3 unit	4 unit	5 unit
6	4.6				
9	4.7				
12	5.2	4.7			
15	6.1	5.1			
18	7.5	6.4	6.0		
21	9.5	8.4	6.7		
24	11.6	10.7	8.9	8.4	
27		12.1	11.2	10.5	
30		12.9	11.9	12.2	12.0
33		12.9	14.1	15.1	14.3
36		12.9	14.4	17.7	17.0
39		13.1	14.2	19.9	18.9
42		13.1	14.0	19.4	20.9
45		13.4	13.8	18.9	21.2
48		13.1	13.6	18.5	20.9
51			13.5	18.0	20.6

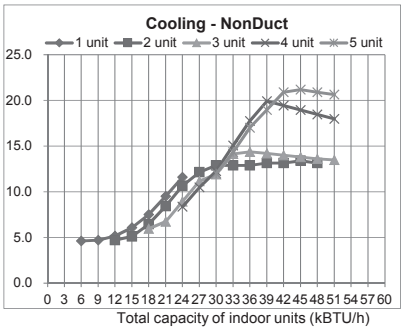

■ Current (230V)

	1 unit	2 unit	3 unit	4 unit	5 unit
6	4.2				
9	4.3				
12	4.7	4.3			
15	5.5	4.6			
18	6.8	5.8	5.4		
21	8.6	7.6	6.1		
24	10.5	9.6	8.1	7.6	
27		11.0	10.1	9.5	
30		11.7	10.8	11.1	10.9
33		11.7	12.8	13.6	13.0
36		11.7	13.0	16.0	15.4
39		11.9	12.8	18.0	17.1
42		11.9	12.6	17.6	18.9
45		12.1	12.5	17.1	19.2
48		11.9	12.3	16.7	18.9
51			12.2	16.3	18.7

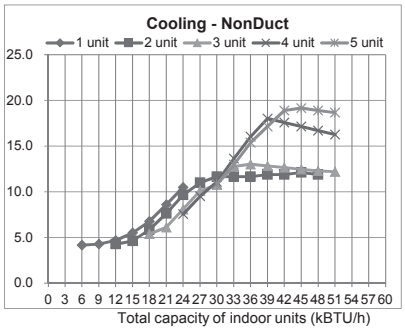

■ Current (208V)

	1 unit	2 unit	3 unit	4 unit	5 unit
6					
9	5.0				
12	5.8				
15	7.3				
18	9.4	9.0			
21	10.9	9.9			
24	12.2	11.4			
27		12.6	11.7		
30		14.1	12.9		
33		14.1	13.9		
36		14.1	13.8	15.4	
39		13.9	13.7	15.8	
42		14.1	13.6	16.0	
45		14.4	13.5	16.0	18.5
48		14.1	13.4	16.0	19.2
51			13.3	16.0	19.5

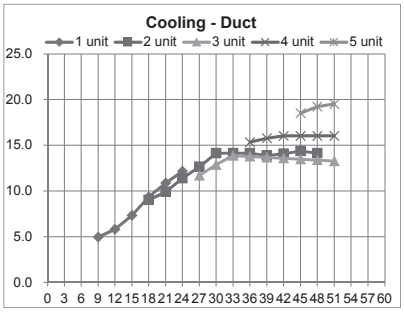

■ Current (230V)

	1 unit	2 unit	3 unit	4 unit	5 unit
6					
9	4.5				
12	5.3				
15	6.6				
18	8.5	8.2			
21	9.8	9.0			
24	11.0	10.3			
27		11.4	10.6		
30		12.8	11.7		
33		12.8	12.6		
36		12.8	12.5	13.9	
39		12.6	12.4	14.3	
42		12.7	12.3	14.5	
45		13.0	12.2	14.5	16.7
48		12.8	12.1	14.5	17.4
51			12.0	14.5	17.7

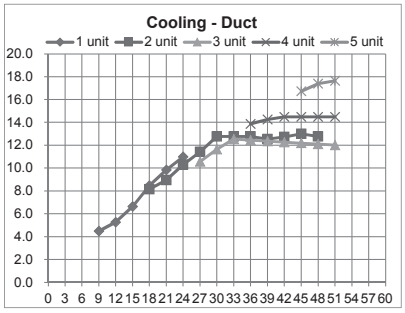

MXZ-5C42NA2

NOTE 1: When 2 or more indoor units are running, the capacity per unit is obtained based on the capacity ratio of their individual operation.

NOTE 2: Input for the indoor unit is excluded.

■Capacity (Heating - NonDuct)

	1 unit	2 unit	3 unit	4 unit	5 unit
6	7400				
9	11000				
12	14400	14800			
15	18000	18400			
18	21600	22000	22200		
21	24600	25400	25800		
24	27600	28000	29200	29600	
27		28000	32800	33200	
30		28000	32800	36000	37000
33		28000	32800	36000	40600
36		28000	32800	36000	44000
39		29000	32800	38000	44600
42		29000	32800	38000	45000
45		30000	32800	38000	45800
48		30000	32800	38000	45800
51			32800	38000	46400

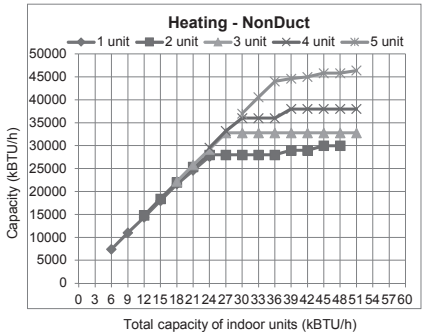

■Input (Heating - NonDuct)

	1 unit	2 unit	3 unit	4 unit	5 unit
6	860				
9	950				
12	1210	1030			
15	1600	1310			
18	2000	1620	1450		
21	2360	1900	1730		
24	2680	2260	2020	2000	
27		2260	2470	2420	
30		2260	2450	2730	2970
33		2260	2430	2700	3200
36		2260	2410	2670	3240
39		2300	2390	2640	3350
42		2300	2370	2610	3480
45		2320	2350	2580	3550
48		2280	2330	2550	3520
51			2310	2520	3490

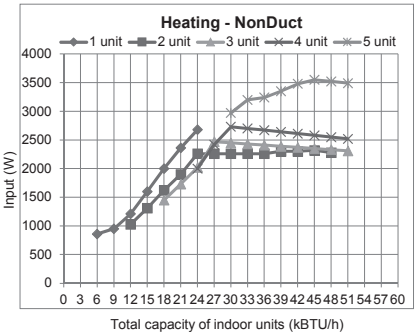

■Capacity (Heating - Duct)

	1 unit	2 unit	3 unit	4 unit	5 unit
6					
9	10900				
12	13600				
15	18000				
18	21600	21800			
21	23800	24500			
24	26000	27200			
27		28000	32700		
30		28000	32700		
33		28000	32700		
36		28000	32700	34400	
39		29000	32700	34800	
42		29000	32700	35800	
45		30000	32700	35800	41000
48		30000	32700	37200	42000
51			32700	37200	43000

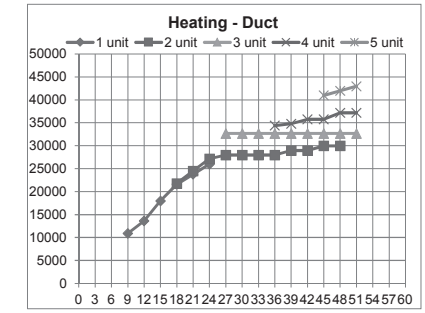

■Input (Heating - Duct)

	1 unit	2 unit	3 unit	4 unit	5 unit
6					
9	1000				
12	1260				
15	1650				
18	2050	1820			
21	2450	2000			
24	2710	2360			
27		2360	2590		
30		2360	2570		
33		2360	2550		
36		2360	2530	2820	
39		2400	2510	2850	
42		2400	2490	2980	
45		2420	2470	2980	3160
48		2380	2450	3110	3310
51			2430	3060	3330

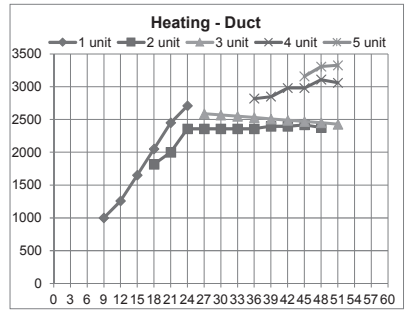

■ Current (208V)

	1 unit	2 unit	3 unit	4 unit	5 unit
6	4.4				
9	4.8				
12	6.1	5.1			
15	8.1	6.5			
18	10.1	8.0	7.2		
21	11.9	9.4	8.6		
24	13.6	11.2	10.0	9.7	
27		11.2	12.2	11.8	
30		11.2	12.1	13.3	14.4
33		11.2	11.9	13.1	15.5
36		11.2	11.9	13.0	15.7
39		11.4	11.9	12.8	16.3
42		11.4	11.8	12.7	16.9
45		11.5	11.7	12.5	17.2
48		11.3	11.6	12.4	17.1
51			11.5	12.2	17.0

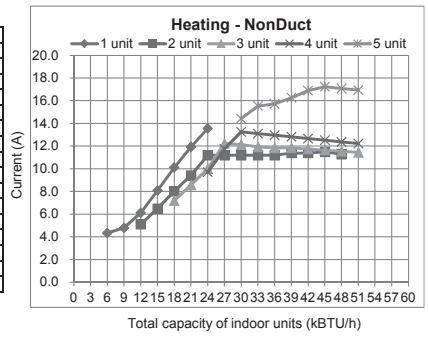

■ Current (230V)

	1 unit	2 unit	3 unit	4 unit	5 unit
6	3.9				
9	4.4				
12	5.5	4.6			
15	7.3	5.9			
18	9.2	7.3	6.5		
21	10.8	8.5	7.8		
24		10.1	9.1	8.8	
27		10.1	11.1	10.6	
30		10.1	11.0	12.0	13.0
33		10.1	10.8	11.9	14.1
36		10.1	10.7	11.7	14.2
39		10.3	10.7	11.6	14.7
42		10.3	10.6	11.5	15.3
45		10.4	10.5	11.3	15.6
48		10.2	10.4	11.2	15.5
51			10.4	11.1	15.3

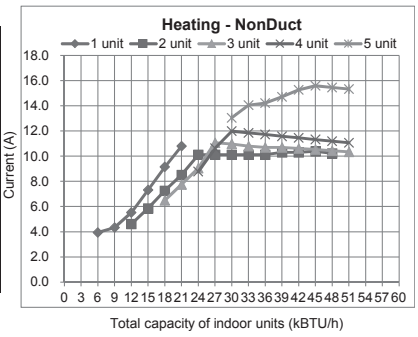

■ Current (208V)

	1 unit	2 unit	3 unit	4 unit	5 unit
6					
9	5.1				
12	6.4				
15	8.4				
18	10.4	9.0			
21	12.4	9.9			
24	13.7	11.7			
27		11.7	12.8		
30		11.7	12.7		
33		11.7	12.6		
36		11.7	12.5	13.7	
39		11.9	12.4	13.8	
42		11.9	12.3	14.5	
45		12.0	12.2	14.5	15.4
48		11.8	12.1	15.1	16.1
51			12.0	14.9	16.2

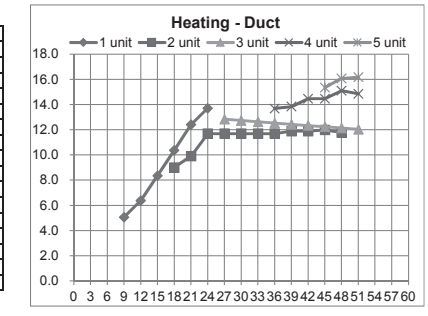

■ Current (230V)

	1 unit	2 unit	3 unit	4 unit	5 unit
6					
9	4.6				
12	5.8				
15	7.6				
18	9.4	8.2			
21	11.2	9.0			
24	12.4	10.6			
27		10.6	11.6		
30		10.6	11.5		
33		10.6	11.4		
36		10.6	11.3	12.4	
39		10.8	11.3	12.5	
42		10.8	11.2	13.1	
45		10.9	11.1	13.1	13.9
48		10.7	11.0	13.7	14.5
51			10.9	13.4	14.6

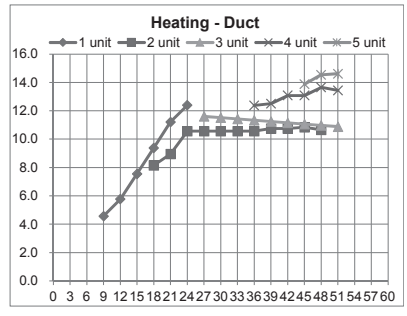

MXZ-2C20NAHZ2

NOTE 1: When 2 or more indoor units are running, the capacity per unit is obtained based on the capacity ratio of their individual operation.

NOTE 2: Input for the indoor unit is excluded.

■ Capacity (Cooling - NonDuct)

	1 unit	2 unit
6	6000	
9	9000	
12	12000	12000
15	14000	15000
18		18000
21		20000
24		20000

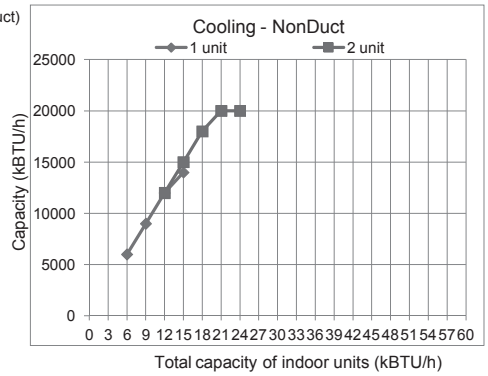

■ Input (Cooling - NonDuct)

	1 unit	2 unit
6	910	
9	930	
12	1020	970
15	1200	1060
18		1280
21		1760
24		1740

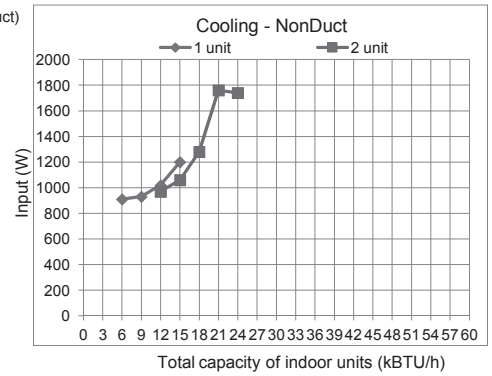

■ Capacity (Cooling - Duct)

	1 unit	2 unit
6		
9	9000	
12	12000	
15	15000	
18		18000
21		20000
24		20000

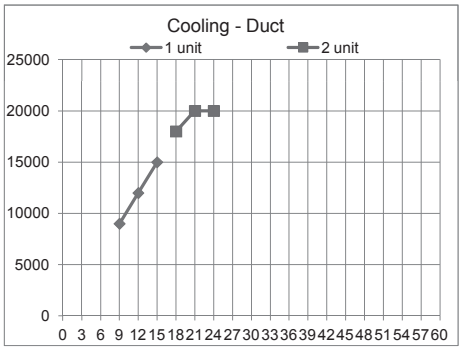

■Input (Cooling - Duct)

	1 unit	2 unit
6		
9	980	
12	1150	
15	1450	
18		1780
21		1980
24		1950

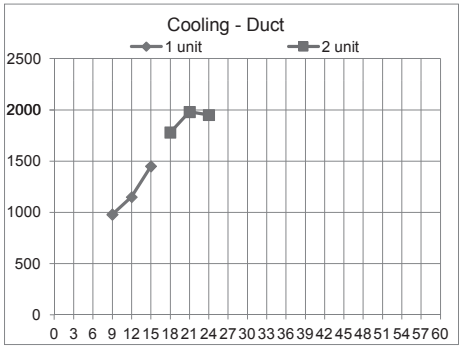

■ Current (208V)

	1 unit	2 unit
6	4.6	
9	4.7	
12	5.2	4.7
15	6.1	5.2
18		6.2
21		8.6
24		8.5

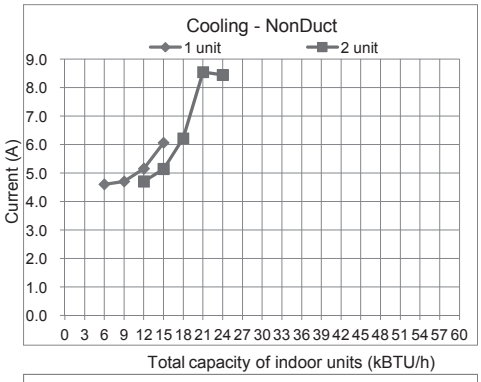

■ Current (230V)

	1 unit	2 unit
6	4.2	
9	4.3	
12	4.7	4.3
15	5.5	4.7
18		5.6
21		7.7
24		7.6

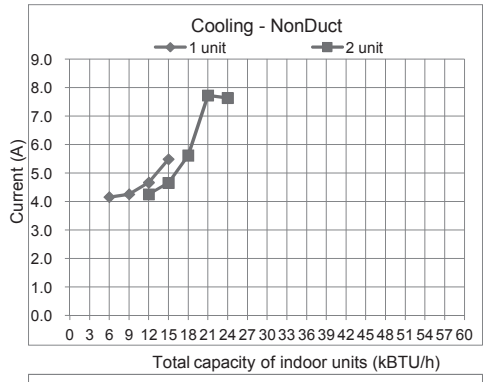

■ Current (208V)

	1 unit	2 unit
6		
9	5.0	
12	5.8	
15	7.3	
18		8.6
21		9.6
24		9.5

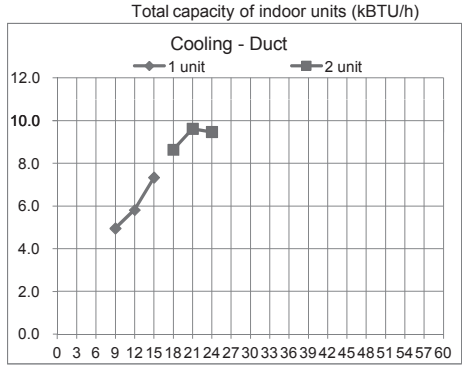

■ Current (230V)

	1 unit	2 unit
6		
9	4.5	
12	5.3	
15	6.6	
18		7.8
21		8.7
24		8.6

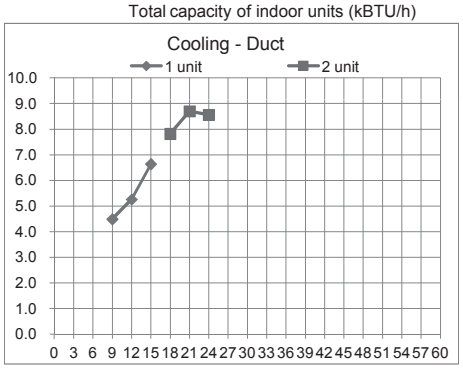

MXZ-2C20NAHZ2

NOTE 1: When 2 or more indoor units are running, the capacity per unit is obtained based on the capacity ratio of their individual operation.

NOTE 2: Input for the indoor unit is excluded.

■ Capacity (Heating)- NonDuct)

	1 unit	2 unit
6	7400	
9	11000	
12	14400	14800
15	18000	18400
18		22000
21		22000
24		22000

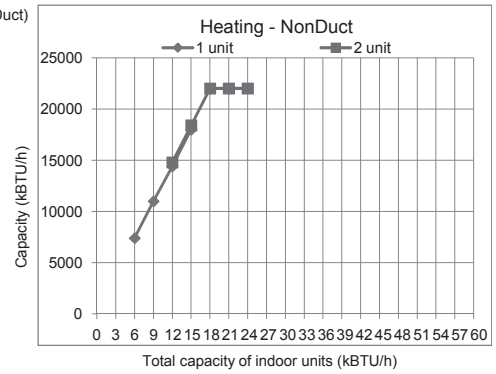

■Input (Heating - NonDuct)

	1 unit	2 unit
6	860	
9	950	
12	1210	1030
15	1600	1310
18		1480
21		1590
24		1560

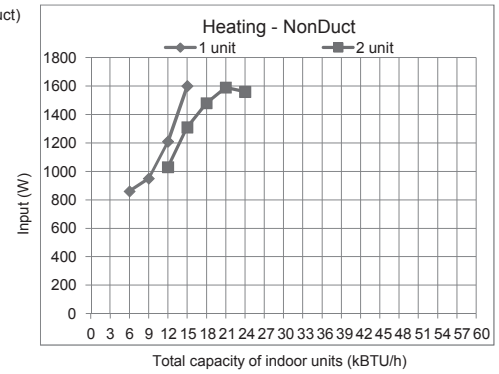

■ Capacity (Heating - Duct)

	1 unit	2 unit
6		
9	10900	
12	13600	
15	18000	
18		21800
21		22000
24		22000

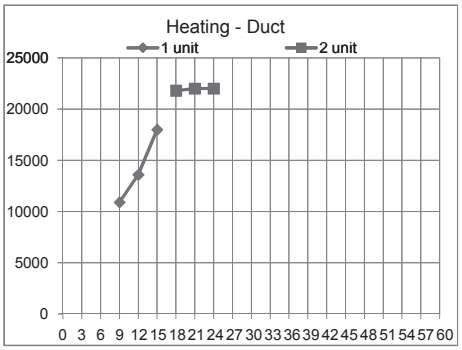

■Input (Heating - Duct)

	1 unit	2 unit
6		
9	1000	
12	1260	
15	1650	
18		1700
21		1930
24		1960

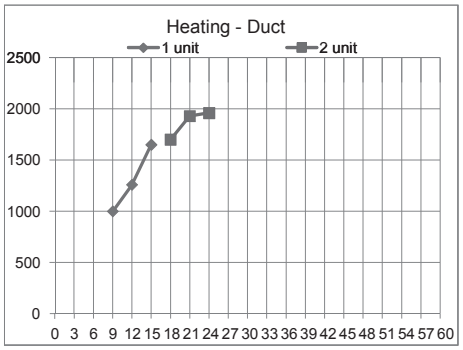

■ Current (208V)

	1 unit	2 unit
6	4.4	
9	4.8	
12	6.1	5.0
15	8.1	6.4
18		7.2
21		7.7
24		7.6

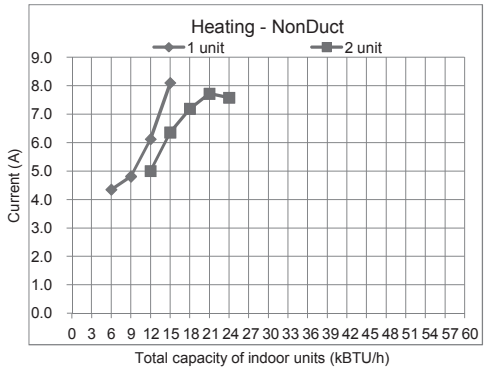

■ Current (230V)

	1 unit	2 unit
6	3.9	
9	4.4	
12	5.5	4.5
15	7.3	5.8
18		6.5
21		7.0
24		6.9

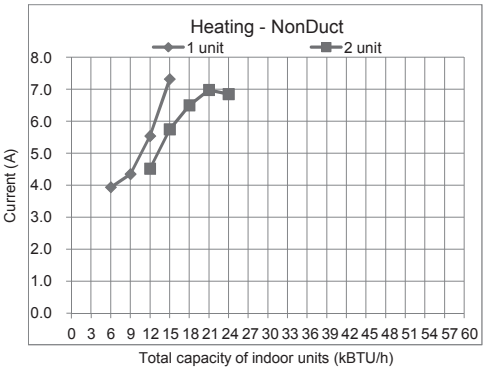

■ Current (208V)

	1 unit	2 unit
6		
9	5.1	
12	6.4	
15	8.4	
18		8.3
21		9.4
24		9.5

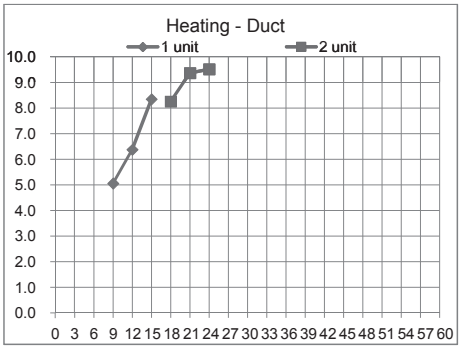

■ Current (230V)

	1 unit	2 unit
6		
9	4.6	
12	5.8	
15	7.6	
18		7.5
21		8.5
24		8.6

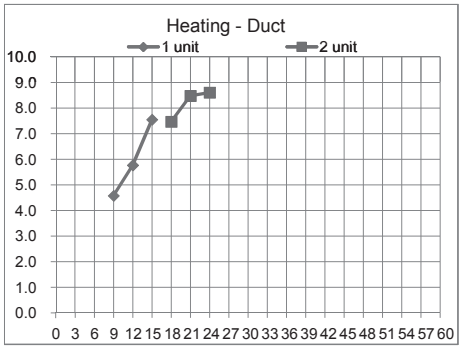

MXZ-3C24NAHZ2

NOTE 1: When 2 or more indoor units are running, the capacity per unit is obtained based on the capacity ratio of their individual operation.

NOTE 2: Input for the indoor unit is excluded.

■ Capacity (Cooling - NonDuct)

	1 unit	2 unit	3 unit
6	6000		
9	9000		
12	12000	12000	
15	14000	15000	
18	17200	18000	18000
21		20000	21000
24		21800	22000
27		21800	24000

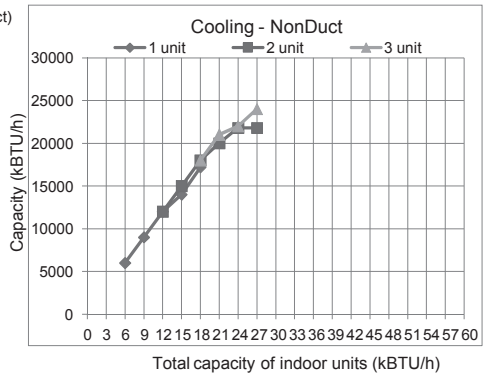

■ Input (Cooling - NonDuct)

	1 unit	2 unit	3 unit
6	910		
9	930		
12	1020	970	
15	1200	1060	
18	1480	1280	1200
21		1750	1360
24		1820	1650
27		1800	1950

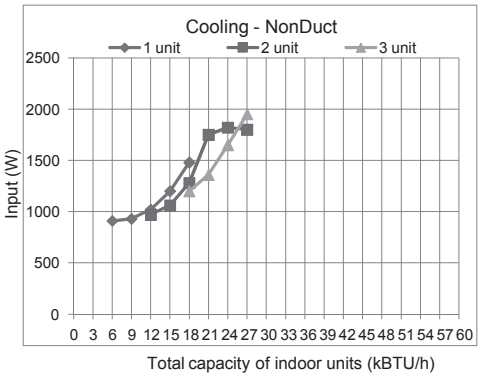

■ Capacity (Cooling - Duct)

	1 unit	2 unit	3 unit
6			
9	9000		
12	12000		
15	15000		
18	17200	18000	
21		21000	
24		21800	
27		21800	23600

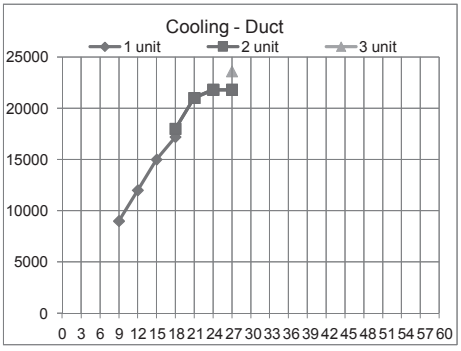

■Input (Cooling - Duct)

	1 unit	2 unit	3 unit
6			
9	980		
12	1150		
15	1450		
18	1850	1820	
21		2050	
24		2320	
27		2280	2180

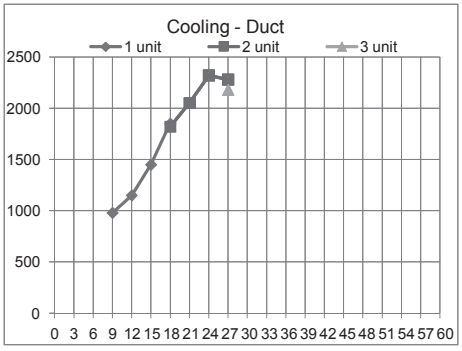

■ Current (208V)

	1 unit	2 unit	3 unit
6	4.6		
9	4.7		
12	5.2	4.8	
15	6.1	5.3	
18	7.5	6.3	5.8
21		8.7	6.6
24		9.0	8.0
27		8.9	9.5

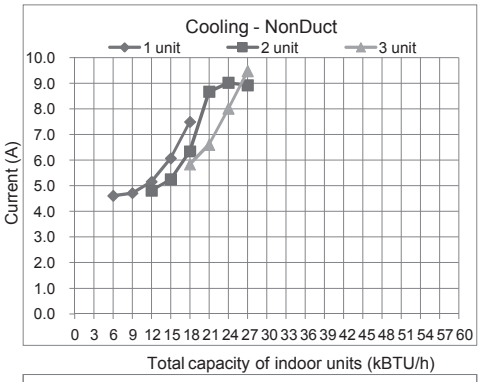

■ Current (230V)

	1 unit	2 unit	3 unit
6	4.2		
9	4.3		
12	4.7	4.4	
15	5.5	4.8	
18	6.8	5.7	5.3
21		7.8	6.0
24		8.2	7.3
27		8.1	8.6

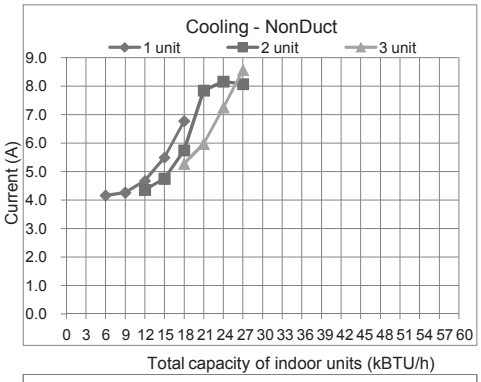

■ Current (208V)

	1 unit	2 unit	3 unit
6			
9	5.0		
12	5.8		
15	7.3		
18	9.4	9.0	
21		10.2	
24		11.5	
27		11.3	10.6

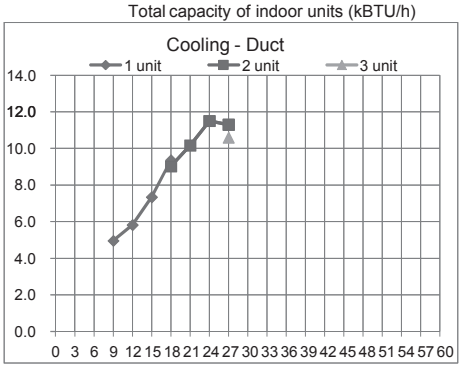

■ Current (230V)

	1 unit	2 unit	3 unit
6			
9	4.5		
12	5.3		
15	6.6		
18	8.5	8.2	
21		9.2	
24		10.4	
27		10.2	9.6

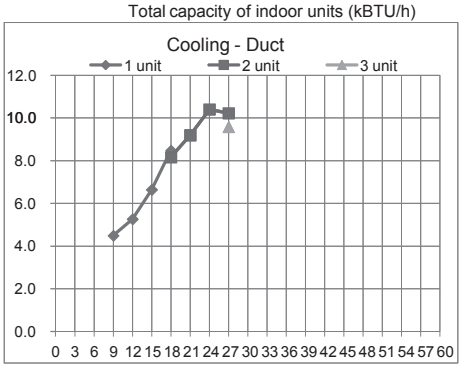

MXZ-3C24NAHZ2

NOTE 1: When 2 or more indoor units are running, the capacity per unit is obtained based on the capacity ratio of their individual operation.

NOTE 2: Input for the indoor unit is excluded.

■ Capacity (Heating - NonDuct)

	1 unit	2 unit	3 unit
6	7400		
9	11000		
12	14400	14800	
15	18000	18400	
18	21600	22000	22200
21		22000	24800
24		22000	25000
27		22000	25000

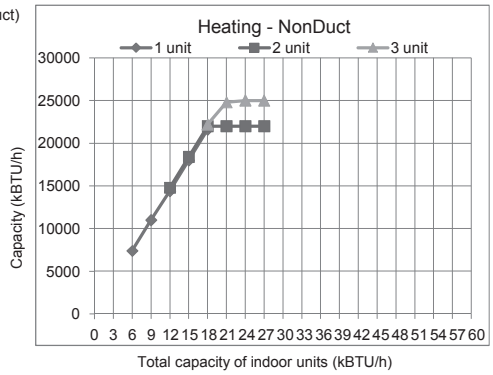

■Input (Heating - NonDuct)

	1 unit	2 unit	3 unit
6	860		
9	950		
12	1210	1030	
15	1600	1310	
18	2000	1620	1450
21		1590	1670
24		1560	1880
27		1530	1860

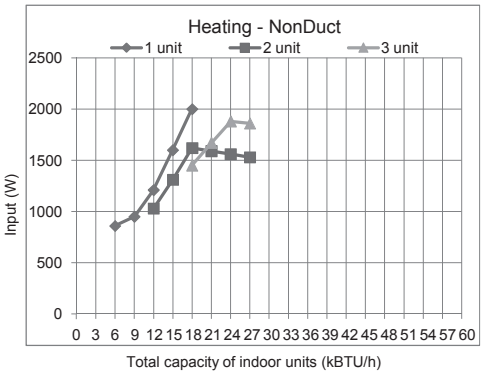

■ Capacity (Heating - Duct)

	1 unit	2 unit	3 unit
6			
9	10900		
12	13600		
15	18000		
18	21600	21800	
21		21800	
24		21800	
27		21800	24600

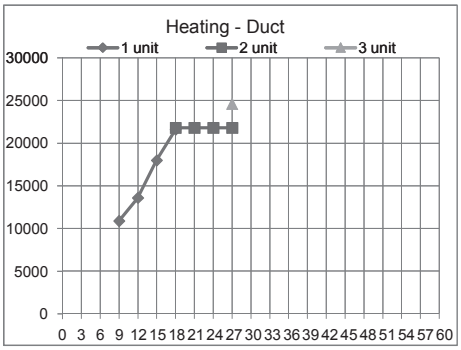

■Input (Heating - Duct)

	1 unit	2 unit	3 unit
6			
9	1000		
12	1260		
15	1650		
18	2050	1820	
21		1990	
24		1960	
27		1930	1700

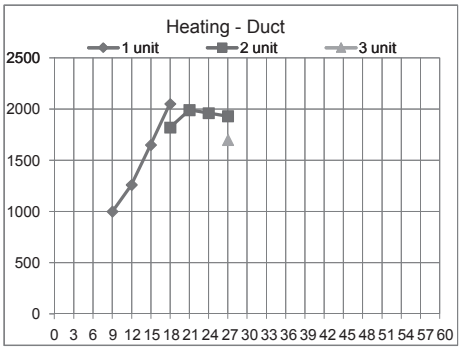

■ Current (208V)

	1 unit	2 unit	3 unit
6	4.4		
9	4.8		
12	6.1	5.1	
15	8.1	6.5	
18	10.1	8.0	7.0
21		7.9	8.1
24		7.7	9.1
27		7.6	9.0

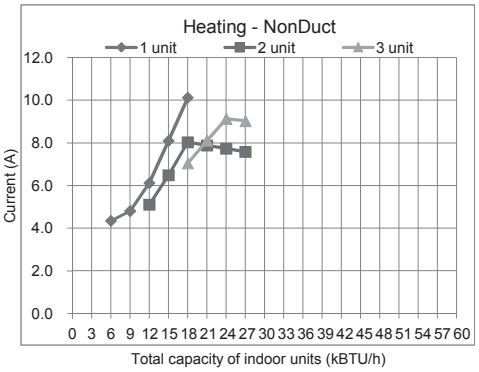

■ Current (230V)

	1 unit	2 unit	3 unit
6	3.9		
9	4.4		
12	5.5	4.6	
15	7.3	5.9	
18	9.2	7.3	6.4
21		7.1	7.3
24		7.0	8.3
27		6.9	8.2

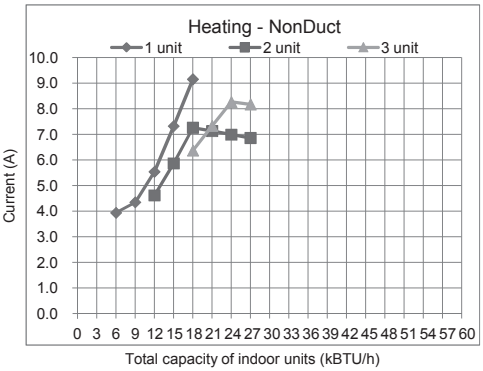

■ Current (208V)

	1 unit	2 unit	3 unit
6			
9	5.1		
12	6.4		
15	8.4		
18	10.4	9.0	
21		9.9	
24		9.7	
27		9.6	8.3

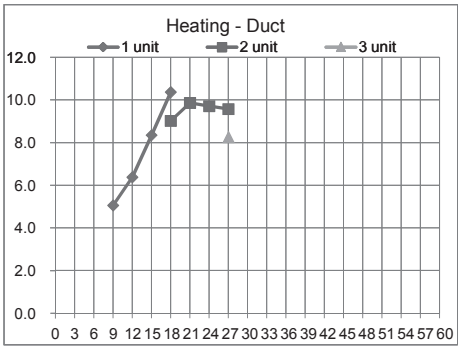

■ Current (230V)

	1 unit	2 unit	3 unit
6			
9	4.6		
12	5.8		
15	7.6		
18	9.4	8.2	
21		8.9	
24		8.8	
27		8.7	7.5

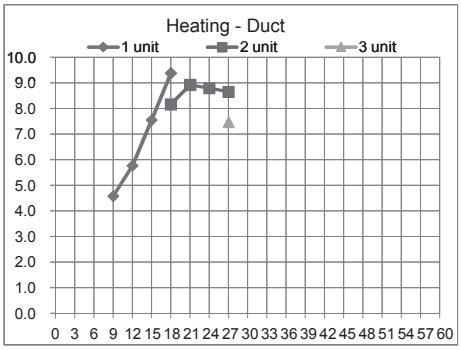

MXZ-3C30NAHZ2

NOTE 1: When 2 or more indoor units are running, the capacity per unit is obtained based on the capacity ratio of their individual operation.

NOTE 2: Input for the indoor unit is excluded.

■ Capacity (Cooling - NonDuct)

	1 unit	2 unit	3 unit
6	6000		
9	9000		
12	12000	12000	
15	14000	15000	
18	17200	18000	18000
21	19800	20000	21000
24	22500	23000	24000
27		24000	26000
30		24000	28400
33		24000	28400
36		24000	28400

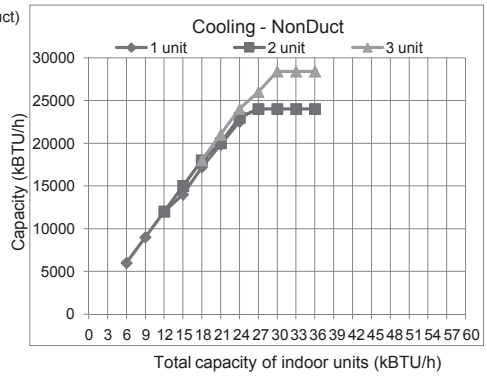

■ Input (Cooling - NonDuct)

	1 unit	2 unit	3 unit
6	910		
9	930		
12	1020	970	
15	1200	1060	
18	1480	1280	1180
21	1880	1760	1340
24	2290	1840	1580
27		1920	1820
30		1900	2220
33		1880	2250
36		1860	2220

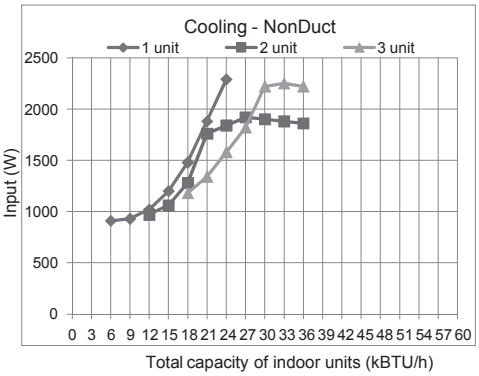

■ Capacity (Cooling - Duct)

	1 unit	2 unit	3 unit
6			
9	9000		
12	12000		
15	15000		
18	17200	18000	
21	20600	21000	
24	24000	24000	
27		24000	27000
30		24000	27400
33		24000	27400
36		24000	27400

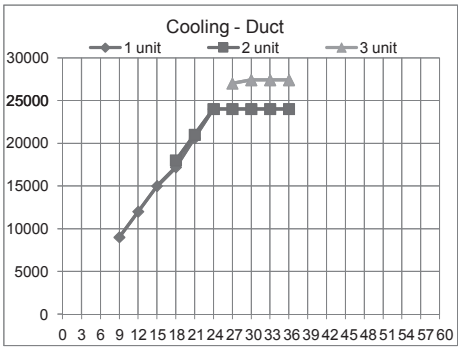

■Input (Cooling - Duct)

	1 unit	2 unit	3 unit
6			
9	980		
12	1150		
15	1450		
18	1850	1820	
21	2150	2020	
24	2400	2300	
27		2270	2400
30		2240	2500
33		2210	2630
36		2190	2600

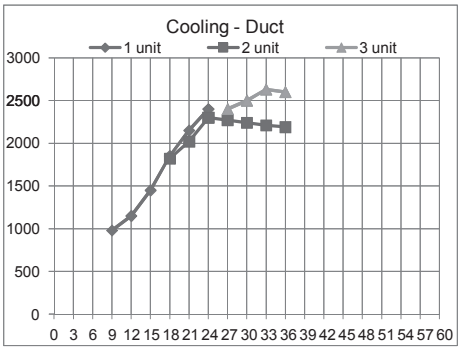

■ Current (208V)

	1 unit	2 unit	3 unit
6	4.6		
9	4.7		
12	5.2	4.8	
15	6.1	5.3	
18	7.5	6.3	5.7
21	9.5	8.7	6.5
24	11.6	9.1	7.7
27		9.5	8.8
30		9.4	10.8
33		9.3	10.9
36		9.2	10.8

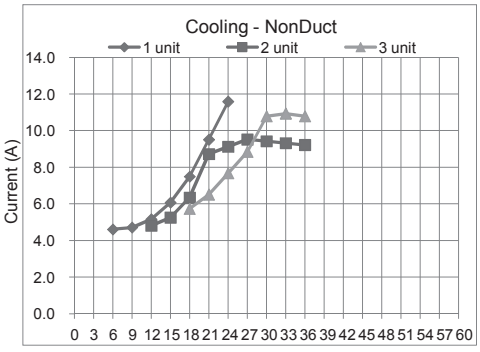

■ Current (230V)

	1 unit	2 unit	3 unit
6	4.2		
9	4.3		
12	4.7	4.4	
15	5.5	4.8	
18	6.8	5.7	5.2
21	8.6	7.9	5.9
24	10.5	8.3	6.9
27		8.6	8.0
30		8.5	9.8
33		8.4	9.9
36		8.3	9.8

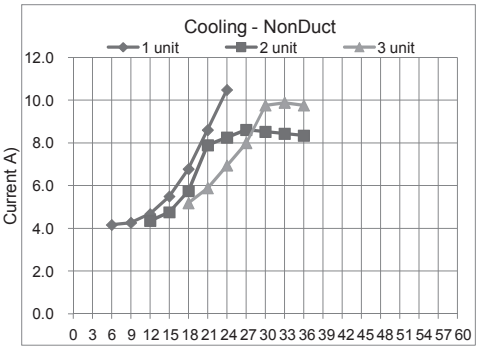

■ Current (208V)

	1 unit	2 unit	3 unit
6			
9	5.0		
12	5.8		
15	7.3		
18	9.4	9.0	
21	10.9	10.0	
24	12.2	11.4	
27		11.3	11.7
30		11.1	12.1
33		11.0	12.8
36		10.9	12.6

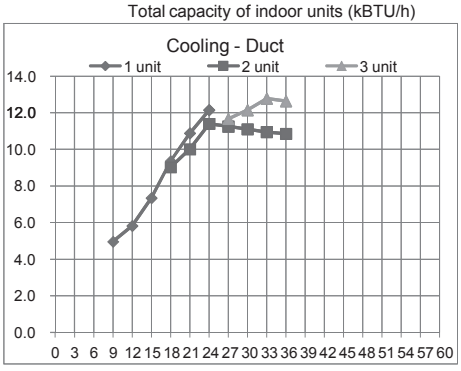

■ Current (230V)

	1 unit	2 unit	3 unit
6			
9	4.5		
12	5.3		
15	6.6		
18	8.5	8.2	
21	9.8	9.1	
24	11.0	10.3	
27		10.2	10.5
30		10.0	11.0
33		9.9	11.6
36		9.8	11.4

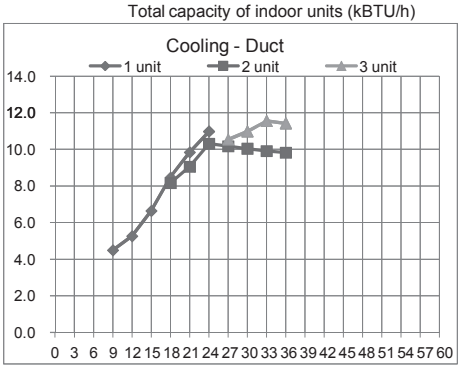

MXZ-3C30NAHZ2

NOTE 1: When 2 or more indoor units are running, the capacity per unit is obtained based on the capacity ratio of their individual operation.

NOTE 2: Input for the indoor unit is excluded.

■ Capacity (Heating - NonDuct)

	1 unit	2 unit	3 unit
6	7400		
9	11000		
12	14400	14800	
15	18000	18400	
18	21600	22000	22200
21	22000	22000	25800
24	22600	23000	28400
27		24000	28400
30		24000	28600
33		24000	28600
36		24000	28600

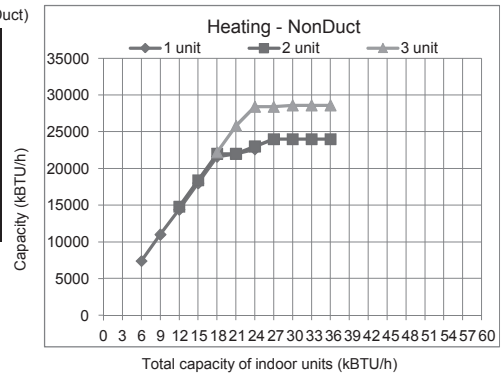

■Input (Heating - NonDuct)

	1 unit	2 unit	3 unit
6	860		
9	950		
12	1210	1030	
15	1600	1310	
18	2000	1620	1450
21	2360	1900	1560
24	2680	2210	1700
27		2170	1900
30		2140	2040
33		2110	2010
36		2080	1980

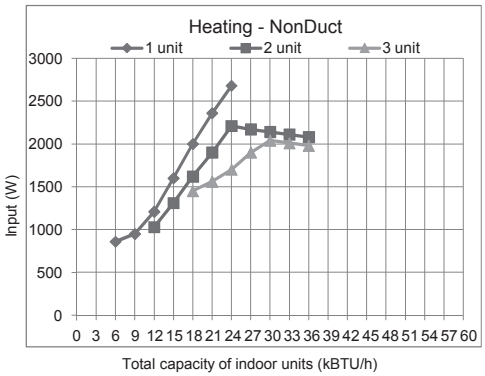

■ Capacity (Heating - Duct)

	1 unit	2 unit	3 unit
6			
9	10900		
12	13600		
15	18000		
18	21600	21800	
21	22800	22800	
24	24000	24000	
27		24000	27400
30		24000	27600
33		24000	27600
36		24000	27600

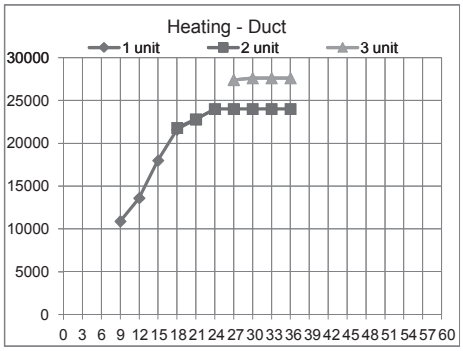

■Input (Heating - Duct)

	1 unit	2 unit	3 unit
6			
9	1000		
12	1260		
15	1650		
18	2050	1820	
21	2450	1990	
24	2710	2210	
27		2180	1950
30		2150	2100
33		2120	2070
36		2090	2040

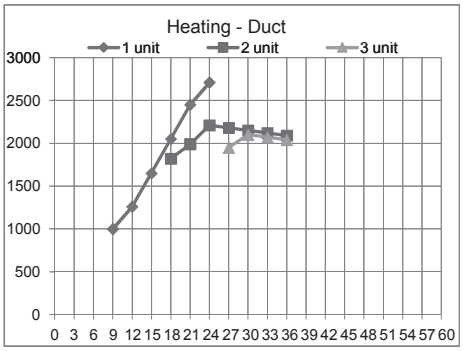

■ Current (208V)

	1 unit	2 unit	3 unit
6	4.4		
9	4.8		
12	6.1	5.1	
15	8.1	6.5	
18	10.1	8.0	7.0
21	11.9	9.4	7.6
24	13.6	11.0	8.3
27		10.8	9.2
30		10.6	9.9
33		10.5	9.8
36		10.3	9.6

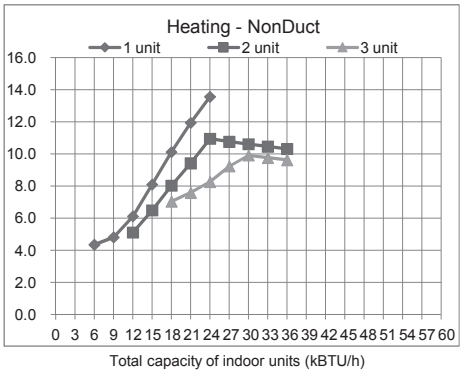

■ Current (230V)

	1 unit	2 unit	3 unit
6	3.9		
9	4.4		
12	5.5	4.6	
15	7.3	5.9	
18	9.2	7.3	6.4
21	10.8	8.5	6.9
24	12.3	9.9	7.5
27		9.7	8.3
30		9.6	9.0
33		9.5	8.8
36		9.3	8.7

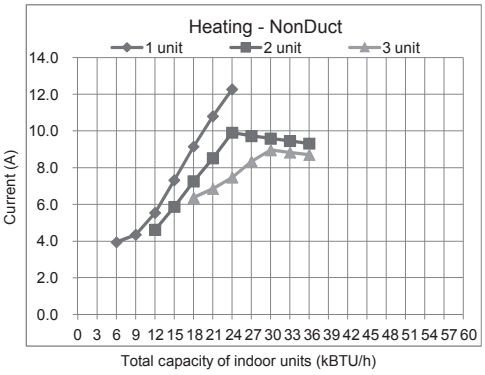

■ Current (208V)

	1 unit	2 unit	3 unit
6			
9	5.1		
12	6.4		
15	8.4		
18	10.4	9.0	
21	12.4	9.9	
24	13.7	11.0	
27		10.8	9.5
30		10.7	10.2
33		10.5	10.1
36		10.4	9.9

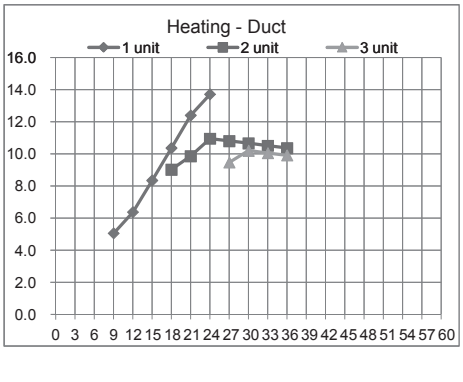

■ Current (230V)

	1 unit	2 unit	3 unit
6			
9	4.6		
12	5.8		
15	7.6		
18	9.4	8.2	
21	11.2	8.9	
24	12.4	9.9	
27		9.8	8.6
30		9.6	9.2
33		9.5	9.1
36		9.4	9.0

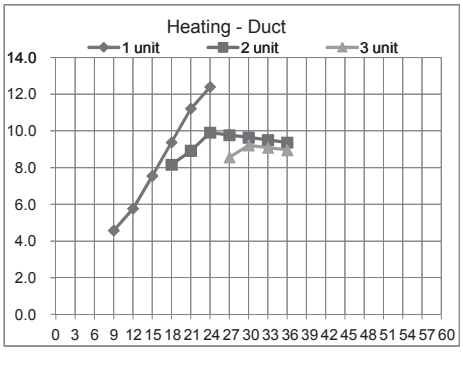

B. MULTI-USE

MXZ-8C48NA MXZ-8C60NA
MXZ-4C36NAHZ MXZ-5C42NAHZ MXZ-8C48NAHZ

1 REFERENCE SERVICE MANUAL

For information on service, please refer to the service manual as follows.

1-1. OUTDOOR UNIT

Model name	Service Ref.	Service Manual No.
MXZ-8C48NA MXZ-8C60NA MXZ-4C36NAHZ MXZ-5C42NAHZ MXZ-8C48NAHZ	MXZ-8C48NA - U1 MXZ-8C60NA - U1 MXZ-4C36NAHZ - U1 MXZ-5C42NAHZ - U1 MXZ-8C48NAHZ - U1	OCH573E OCB573B

1-2. BRANCH BOX

Model name	Service Ref.	Service Manual No.
PAC-MKA51BC PAC-MKA31BC	PAC-MKA51BC PAC-MKA31BC	OCH573E OCB573B

2 SPECIFICATIONS

2-1. OUTDOOR UNIT
MXZ-8C48NA

Conversion formula:	kcal/h = kW × 860 Btu/h = kW × 3412 CFM = m³/min × 35.31

Service Ref.				MXZ-8C48NA		
Standard performance	Indoor type			Non-Ducted	Mix	Ducted
	Cooling	Capacity Rated*1	BTU/h	48,000	48,000	48,000
		Rated power consumption*1	W	4,000	4,465	5,050
		EER	BTU/Wh	12.00	10.75	9.50
		SEER	BTU/Wh	18.9	16.8	14.7
	Heating	Capacity Rated 47°F*1	BTU/h	54,000	54,000	54,000
		Capacity Max. 17°F*2	BTU/h	36,600	36,600	36,600
		Capacity Max. 5°F	BTU/h	32,400	32,400	32,400
		Rated power consumption 47°F*1	W	4,220	4,605	4,990
		COP 47°F*1	BTU/Wh	3.75	3.44	3.17
		HSPF Ⅳ/Ⅴ	BTU/Wh	11.4/8.7	10.8/8.6	10.1/8.4
OUTDOOR UNIT	Connectable indoor units (Max.)			8		
	Max. Connectable Capacity		BTU/h	62,000		
	Power supply			1 Phase 208/230 V, 60 Hz		
	Breaker Size / Max. fuse size			40 A/52 A 40 A/50 A (for the models with U1)		
	Min. circuit ampacity			37 A		
	Sound level (Cool/Heat)		dB	51/ 54		
	External finish			Munsell 3Y 7.8 / 1.1		
	Refrigerant control			Linear Expansion Valve		
	Compressor			Hermetic		
		Model		ANB33FNHMT		
		Motor output	kW	3.4		
		Starting method		Inverter		
	Heat exchanger			Plate fin coil		
	Fan	Fan (drive) × No.		Propeller fan × 2		
		Fan motor output	kW	0.06 + 0.06 0.074 + 0.074 (for the models with U1)		
		Airflow	m³/min (CFM)	110 (3885)		
	Dimensions (H × W × D)	W	in (mm)	41-11/32 (1050)		
		D	in (mm)	13+1 (330+25)		
		H	in (mm)	52-11/16 (1338)		
	Weight		lb (kg)	269 (122)		
	Refrigerant			R410A		
		Charge	lb (kg)	10 lbs. 9 oz. (4.8)		
		Oil / Model	fl oz (L)	78 (2.3) /Ethereal oil (FV50S)		
	Protection devices	High pressure protection		HP switch		
		Compressor protection		Compressor thermo, Over current detection		
		Fan motor protection		Overheating / Voltage protection		
	Guaranteed operation range		(cool)	D.B. 23 to 115°F [D.B. −5 to 46°C]*3		
			(heat)	D.B. −4 to 70°F [D.B. −20 to 21°C]		
REFRIGERANT PIPING	Total Piping length (Max.)		ft (m)	492 (150)		
	Farthest		ft (m)	262 (80)		
	Max. Height difference		ft (m)	164 (50)*4		
	Chargeless length		ft (m)	0		
	Piping diameter	Liquid	ϕin (mm)	ϕ3/8 (9.52)		
		Gas	ϕin (mm)	ϕ 5/8 (15.88)		
	Connection method	Indoor side		Flared		
		Outdoor side		Flared		

*1 Rating conditions
Cooling Indoor : D.B. 80°F/W.B. 67°F [D.B. 26.7°C/W.B. 19.4°C]
Outdoor : D.B. 95°F [D.B. 35.0°C]
Heating Indoor : D.B. 70°F [D.B. 21.1°C]
Outdoor : D.B. 47°F/W.B. 43°F [D.B. 8.3°C/W.B. 6.1°C]

*2 Conditions
Heating Indoor : D.B. 70°F [D.B. 21.1°C]
Outdoor : D.B. 17°F/W.B. 15°F [D.B. −8.3°C/W.B. −9.4°C]

*3 D.B. 5 to 115°F [D.B. −15 to 46°C], when an optional Air Outlet Guide is installed.
*4 131 ft [40 m], in case of installing outdoor unit lower than indoor unit.
Note: Refer to the indoor unit's service manual for the indoor units specifications.

Conversion formula:	kcal/h = kW × 860 BTU/h = kW × 3412 CFM = m³/min × 35.31

MXZ-8C60NA

Service Ref.				MXZ-8C60NA		
Standard performance	Indoor type			Non-Ducted	Mix	Ducted
	Cooling	Capacity Rated*1	BTU/h	60,000	60,000	60,000
		Rated power consumption*1	W	4,800	5,525	6,250
		EER	BTU/Wh	12.50	11.05	9.60
		SEER	BTU/Wh	17.4	16.3	15.1
	Heating	Capacity Rated 47°F*1	BTU/h	66,000	66,000	66,000
		Capacity Max. 17°F*2	BTU/h	65,000	61,500	58,000
		Capacity Max. 5°F	BTU/h	57,000	49,500	42,000
		Rated power consumption 47°F*1	W	5,670	5,670	5,670
		COP 47°F*1	BTU/Wh	3.40	3.40	3.40
		HSPF Ⅳ/Ⅴ	BTU/Wh	10.50/8.50	10.25/8.25	10.00/8.00
OUTDOOR UNIT	Connectable indoor units (Max.)			8		
	Max. Connectable Capacity		BTU/h	78,000		
	Power supply			1 Phase 208/230 V, 60 Hz		
	Breaker Size/Max. fuse size			50 A/52 A		
	Min. circuit ampacity			46A		
	Sound level (Cool/Heat)		dB	58/59		
	External finish			Munsell 3Y 7.8/ 1.1		
	Refrigerant control			Linear Expansion Valve		
	Compressor			Hermetic		
		Model		ANB66FFZMT		
		Motor output	kW	4.2		
		Starting method		Inverter		
	Heat exchanger			Plate fin coil		
	Fan	Fan (drive) × No.		Propeller fan × 2		
		Fan motor output	kW	0.2 + 0.2		
		Airflow	m³/min (CFM)	138 (4879)		
	Dimensions (H × W × D)	W	in (mm)	41-11/32 (1050)		
		D	in (mm)	13+1 (330+25)		
		H	in (mm)	52-11/16 (1338)		
	Weight		lb (kg)	309 (140)		
	Refrigerant			R410A		
		Charge	lb (kg)	11 lbs. 4 oz.(5.1)		
		Oil/Model	oz (L)	78 (2.3)/Ethereal oil (FV50S)		
	Protection devices	High pressure protection		HP switch		
		Compressor protection		Compressor thermo, Overcurrent detection		
		Fan motor protection		Overheating/Voltage protection		
	Guaranteed operation range		(cool)	D.B 23 to 115°F [D.B.−5 to 46°C] *3		
			(heat)	D.B. −4 to 70°F [D.B. −20 to 21°C]		
REFRIGERANT PIPING	Total Piping length (Max.)		ft (m)	492 (150)		
	Farthest		ft (m)	262 (80)		
	Max. Height difference		ft (m)	164 (50)*4		
	Chargeless length		ft (m)	0		
	Piping diameter	Liquid	øinch (mm)	ϕ3/8 (9.52)		
		Gas	øinch (mm)	ϕ3/4 (19.05)		
	Connection method	Indoor side		Flared		
		Outdoor side		Flared		

*1 Rating conditions
Cooling Indoor : D.B. 80°F/W.B. 67 °F [D.B.26.7°C/W.B. 19.4°C]
Outdoor : D.B. 95°F [D.B. 35.0°C]
Heating Indoor : D.B. 70°F [D.B. 21.1°C]
Outdoor : D.B. 47°F/W.B. 43°F [D.B. 8.3°C/W.B. 6.1°C]

*2 Conditions
Heating Indoor : D.B. 70°F [D.B. 21.1°C]
Outdoor : D.B. 17°F/W.B. 15°F [D.B. −8.3°C/W.B. −9.4°C]

*3 D.B. 5 to 115°F [D.B. −15 to 46°C], when an optional Air Outlet Guide is installed.

*4 131 ft [40 m], in case of installing outdoor unit lower than indoor unit.

Note: Refer to the indoor unit's service manual for the indoor units specifications.

Conversion formula:	kcal/h = kW x 860 BTU/h = kW x 3412 CFM = m³/min x 35.31

MXZ-4C36NAHZ MXZ-5C42NAHZ

Service Ref.				MXZ-4C36NAHZ			MXZ-5C42NAHZ		
Standard performance	Indoor type			Non-Ducted	Mix	Ducted	Non-Ducted	Mix	Ducted
	Cooling	Capacity Rated*1	BTU/h	36,000	36,000	36,000	42,000	42,000	42,000
		Rated power consumption*1	W	2,570	2,845	3,180	3,130	3,470	3,890
		EER	BTU/Wh	14.00	12.65	11.30	13.40	12.10	10.80
		SEER	BTU/Wh	19.1	17.5	15.8	19.0	17.0	15.0
	Heating	Capacity Rated 47°F*1	BTU/h	45,000	45,000	45,000	48,000	48,000	48,000
		Capacity Max. 17°F*2	BTU/h	45,000	45,000	45,000	48,000	48,000	48,000
		Capacity Max. 5°F	BTU/h	45,000	45,000	45,000	48,000	48,000	48,000
		Rated power consumption 47°F*1	W	3,340	3,795	4,250	3,430	3,890	4,350
		COP 47°F*1	BTU/Wh	3.95	3.48	3.10	4.10	3.62	3.23
		HSPF Ⅳ/Ⅴ	BTU/Wh	11.3/9.2	10.7/8.9	10.1/8.5	11.0/9.1	10.6/9.0	10.1/8.8
OUTDOOR UNIT	Connectable indoor units (Max.)			4			5		
	Max. Connectable Capacity		BTU/h	46,000			54,000		
	Power supply			1 Phase 208/230 V, 60 Hz					
	Breaker Size / Max. fuse size			50 A/52 A 50 A/50 A (for the models with U1)					
	Min. circuit ampacity			42 A					
	Sound level (Cool/Heat)		dB	49/ 53			50/ 54		
	External finish			Munsell 3Y 7.8/ 1.1					
	Refrigerant control			Linear Expansion Valve					
	Compressor			Hermetic					
		Model		ANB33FJSMT					
		Motor output	kW	2.8			3.0		
		Starting method		Inverter					
	Heat exchanger			Plate fin coil					
	Fan	Fan (drive) × No.		Propeller fan × 2					
		Fan motor output	kW	0.06 + 0.06 0.074 + 0.074 (for the models with U1)					
		Airflow	m³/min (CFM)	110 (3885)					
	Dimensions (H × W × D)	W	in (mm)	41-11/32 (1050)					
		D	in (mm)	13+1 (330+25)					
		H	in (mm)	52-11/16 (1338)					
	Weight		lb (kg)	276 (125)					
	Refrigerant			R410A					
		Charge	lb (kg)	10 lbs. 9 oz.(4.8)					
		Oil/ Model	fl oz (L)	78 (2.3)/Ethereal oil (FV50S)					
	Protection devices	High pressure protection		HP switch					
		Compressor protection		Compressor thermo, Overcurrent detection					
		Fan motor protection		Overheating/Voltage protection					
	Guaranteed operation range		(cool)	D.B 23 to 115°F [D.B.−5 to 46°C] *3					
			(heat)	D.B. −13 to 70°F [D.B. −25 to 21°C]					
REFRIGERANT PIPING	Total Piping length (Max.)		ft (m)	492 (150)					
	Farthest		ft (m)	262 (80)					
	Max. Height difference		ft (m)	164 (50)*4					
	Chargeless length		ft (m)	0					
	Piping diameter	Liquid	ϕin (mm)	ϕ3/8 (9.52)					
		Gas	ϕin (mm)	ϕ5/8 (15.88)					
	Connection method	Indoor side		Flared					
		Outdoor side		Flared					

*1 Rating conditions
Cooling Indoor : D.B. 80°F/W.B. 67 °F [D.B.26.7°C/W.B. 19.4°C]
Outdoor : D.B. 95°F [D.B. 35.0°C]
Heating Indoor : D.B. 70°F [D.B. 21.1°C]
Outdoor : D.B. 47°F/W.B. 43°F [D.B. 8.3°C/W.B. 6.1°C]

*2 Conditions
Heating Indoor : D.B. 70°F [D.B. 21.1°C]
Outdoor : D.B. 17°F/W.B. 15°F [D.B. −8.3°C/W.B. −9.4°C]

*3 D.B. 5 to 115°F [D.B. −15 to 46°C], when an optional Air Outlet Guide is installed.
*4 131 ft [40 m], in case of installing outdoor unit lower than indoor unit.
Note: Refer to the indoor unit's service manual for the indoor units specifications.

Conversion formula:	kcal/h = kW × 860 Btu/h = kW × 3412 CFM = m³/min × 35.31

MXZ-8C48NAHZ

Service Ref.				MXZ-8C48NAHZ		
Standard performance	Indoor type			Non-Ducted	Mix	Ducted
	Cooling	Capacity Rated*1	BTU/h	48,000	48,000	48,000
		Rated power consumption*1	W	4,000	4,465	5,050
		EER	BTU/Wh	12.00	10.75	9.50
		SEER	BTU/Wh	18.9	16.8	14.7
	Heating	Capacity Rated 47°F*1	BTU/h	54,000	54,000	54,000
		Capacity 17°F*2	BTU/h	54,000	54,000	54,000
		Capacity 5°F	BTU/h	54,000	54,000	54,000
		Rated power consumption 47°F*1	W	4,220	4,605	4,990
		COP 47°F*1	BTU/Wh	3.75	3.44	3.17
		HSPF Ⅳ/Ⅴ	BTU/Wh	11.0/9.2	10.5/9.2	10.0/9.2
OUTDOOR UNIT	Connectable indoor units (Max.)			8		
	Max. Connectable Capacity		BTU/h	62,000		
	Power supply			1 Phase 208/230 V, 60 Hz		
	Breaker Size / Max. fuse size			50 A/52 A 50 A/50 A (for the models with U1)		
	Min. circuit ampacity			42 A		
	Sound level (Cool/Heat)		dB	51/54		
	External finish			Munsell 3Y 7.8 / 1.1		
	Refrigerant control			Linear Expansion Valve		
	Compressor			Hermetic		
		Model		ANB33FJSMT		
		Motor output	kW	3.4		
		Starting method		Inverter		
	Heat exchanger			Plate fin coil		
	Fan	Fan (drive) × No.		Propeller fan × 2		
		Fan motor output	kW	0.06 + 0.06 0.074 + 0.074 (for the models with U1)		
		Airflow	m³/min (CFM)	110 (3885)		
	Dimensions (H × W × D)	W	in (mm)	41-11/32 (1050)		
		D	in (mm)	13+1 (330+25)		
		H	in (mm)	52-11/16 (1338)		
	Weight		lb (kg)	276 (125)		
	Refrigerant			R410A		
		Charge	lb (kg)	10 lbs. 9 oz. (4.8)		
		Oil / Model	fl oz (L)	78 (2.3) /Ethereal oil (FV50S)		
	Protection devices	High pressure protection		HP switch		
		Compressor protection		Compressor thermo, Over current detection		
		Fan motor protection		Overheating / Voltage protection		
	Guaranteed operation range		(cool)	D.B. 23 to 115°F [D.B. −5 to 46°C]*3		
			(heat)	D.B. −13 to 70°F [D.B. −25 to 21°C]		
REFRIGERANT PIPING	Total Piping length (Max.)		ft (m)	492 (150)		
	Farthest		ft (m)	262 (80)		
	Max. Height difference		ft (m)	164 (50)*4		
	Chargeless length		ft (m)	0		
	Piping diameter	Liquid	ϕin (mm)	ϕ3/8 (9.52)		
		Gas	ϕin (mm)	ϕ 5/8 (15.88)		
	Connection method	Indoor side		Flared		
		Outdoor side		Flared		

*1 Rating conditions
Cooling Indoor : D.B. 80°F/ W.B. 67°F [D.B. 26.7°C/ W.B. 19.4°C]
Outdoor : D.B. 95°F [D.B. 35.0°C]
Heating Indoor : D.B. 70°F [D.B. 21.1°C]
Outdoor : D.B. 47°F/ W.B. 43°F [D.B. 8.3°C / W.B. 6.1°C]

*2 Conditions
Heating Indoor : D.B. 70°F [D.B. 21.1°C]
Outdoor : D.B. 17°F/ W.B. 15°F [D.B. −8.3°C/ W.B. −9.4°C]

*3 D.B. 5 to 115°F [D.B. −15 to 46°C], when an optional Air Outlet Guide is installed.
*4 131 ft [40 m], in case of installing outdoor unit lower than indoor unit.
Note: Refer to the indoor unit's service manual for the indoor units specifications.

2-2. BRANCH BOX
PAC-MKA51BC PAC-MKA31BC

Model name				PAC-MKA51BC	PAC-MKA31BC
Connectable number of indoor units				Maximum 5	Maximum 3
Power supply				Single phase, 208/230 V, 60 Hz	
Input			kW	0.003	
Running current			A	0.05	
External finish				Galvanized sheets	
Dimensions	Width		in (mm)	17-23/32 (450)	
	Depth		in (mm)	11-1/32 (280)	
	Height		in (mm)	6-11/16 (170)	
Weight			lb (kg)	16 (7.4)	15 (6.7)
Piping connection (Flare)	Branch (indoor side)*	Liquid	in (mm)	ϕ1/4(6.35) × 5 {A,B,C,D,E}	ϕ1/4(6.35) × 3 {A,B,C}
		Gas	in (mm)	ϕ 3/8(9.52) × 4 {A,B,C,D}, ϕ 1/2(12.7) × 1{E}	ϕ3/8(9.52) × 3 {A,B,C}
	Main (outdoor side)	Liquid	in (mm)	ϕ3/8 (9.52)	
		Gas	in (mm)	ϕ 5/8 (15.88)	

*The piping connection size differs according to the type and capacity of indoor units. Match the piping connection size for indoor and branch box. If the piping connection size of branch box does not match the piping connection size of indoor units, use optional different-diameter (deformed) joints to the branch box side. (Connect deformed joint directly to the branch box side.)

3-1. OUTDOOR UNIT

Unit: mm (inch)

MXZ-8C48NA MXZ-4C36NAHZ MXZ-5C42NAHZ MXZ-8C48NAHZ

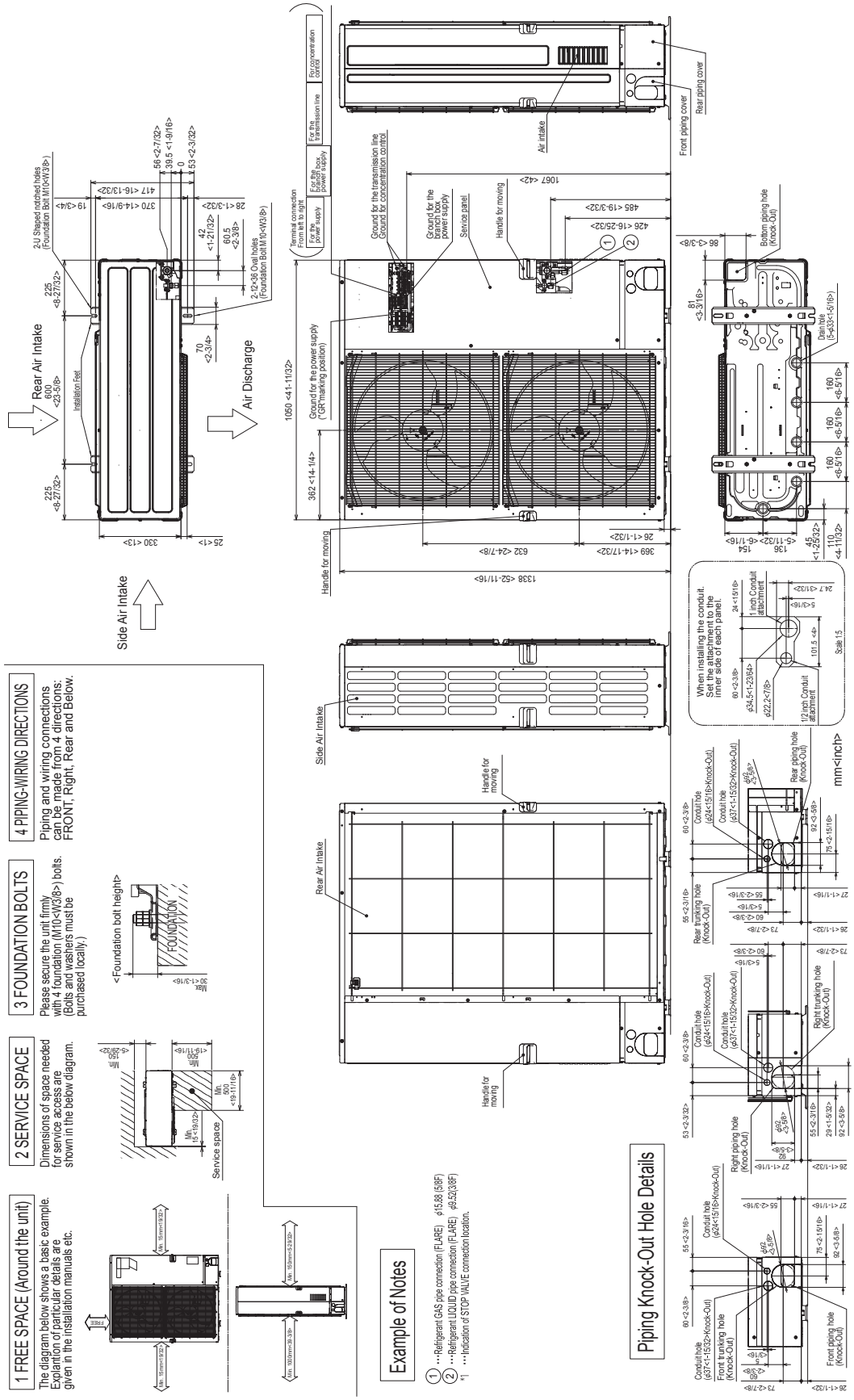

MXZ-8C60NA

Unit: mm <inch>

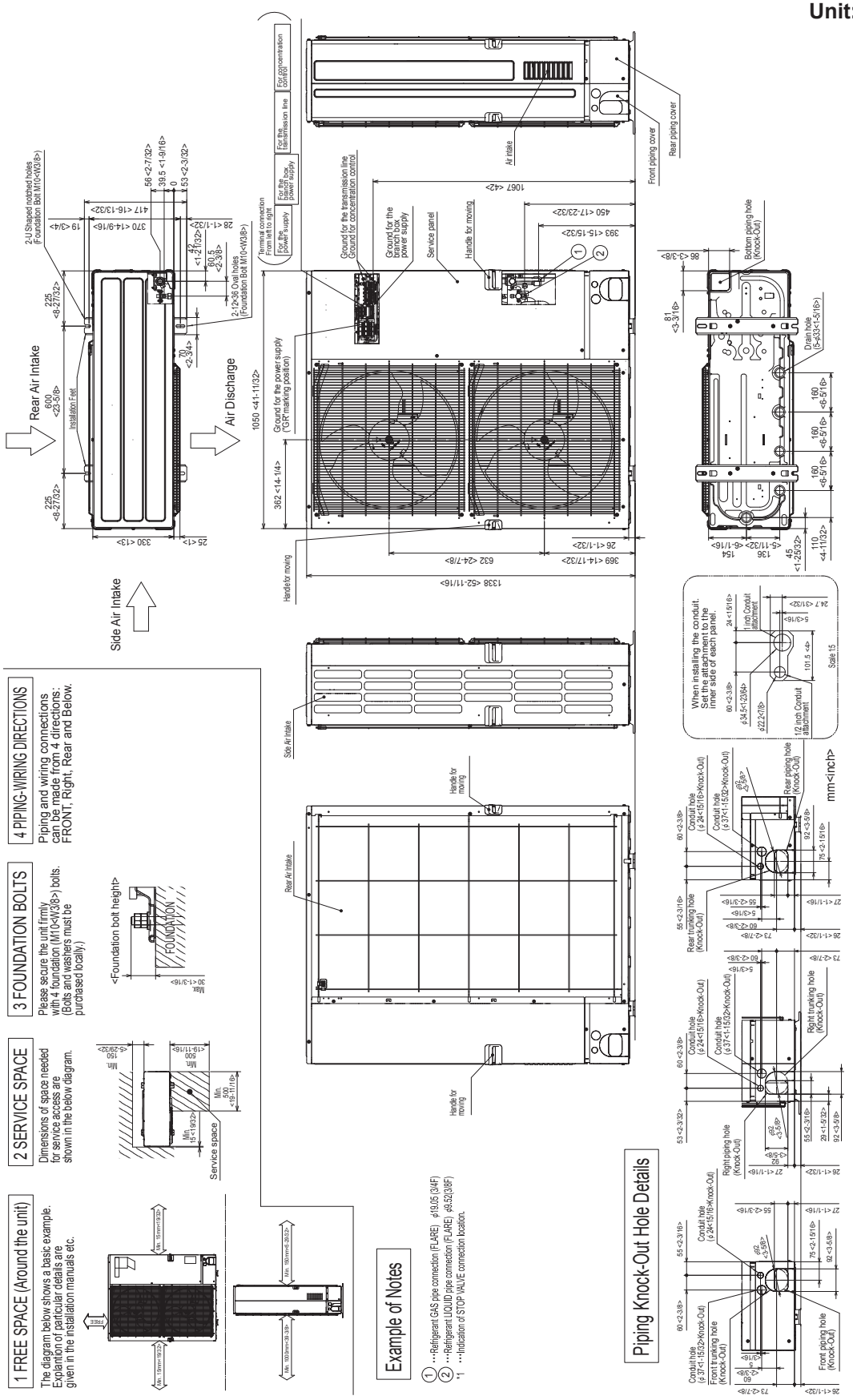

3-2. BRANCH BOX

Unit: mm (inch)

PAC-MKA51BC

SUSPENSION BOLT : W3/8(M10)

REFRIGERANT PIPE FLARED CONNECTION

Unit: inch

	A	B	C	D	E	TO OUTDOOR UNIT
LIQUID PIPE	1/4F	1/4F	1/4F	1/4F	1/4F	3/8F
GAS PIPE	3/8F	3/8F	3/8F	3/8F	1/2F	5/8F

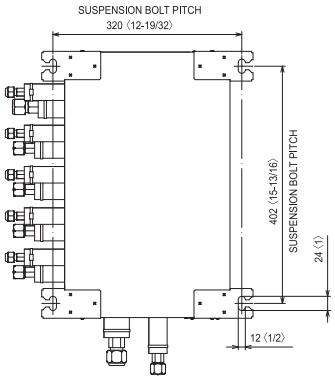

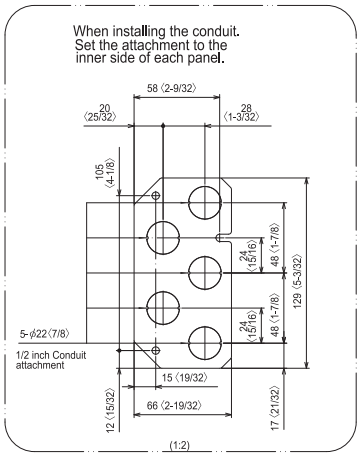

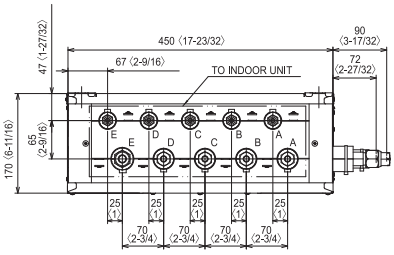

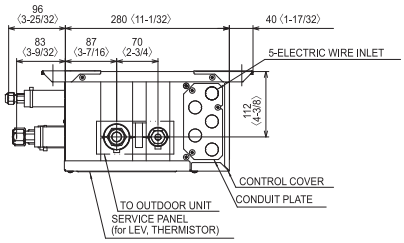

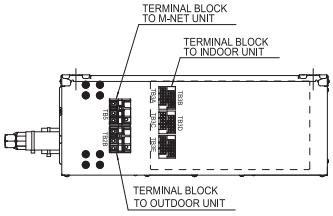

PAC-MKA31BC

SUSPENSION BOLT : W3/8(M10)

REFRIGERANT PIPE FLARED CONNECTION

Unit: inch

	A	B	C			TO OUTDOOR UNIT
LIQUID PIPE	1/4F	1/4F	1/4F			3/8F
GAS PIPE	3/8F	3/8F	3/8F			5/8F

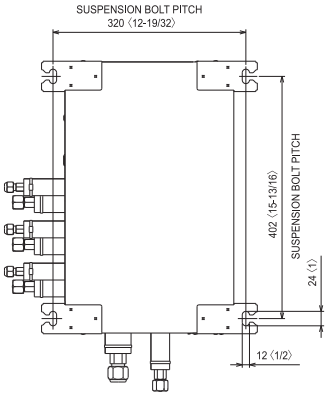

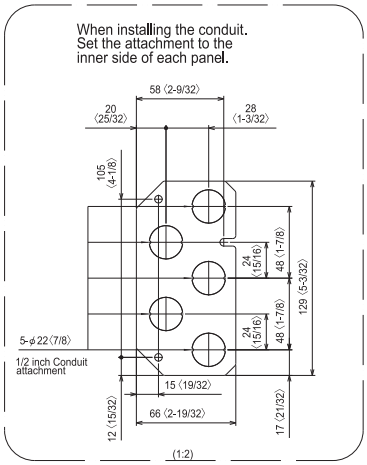

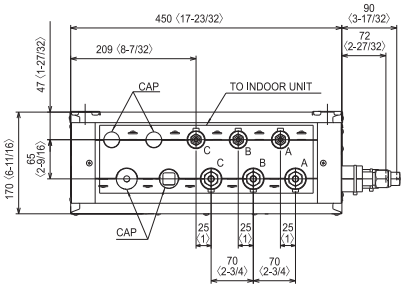

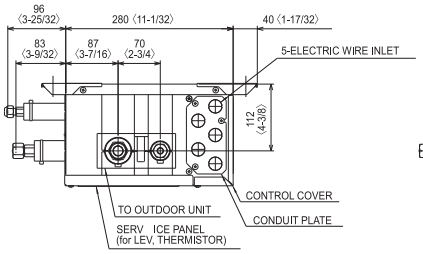

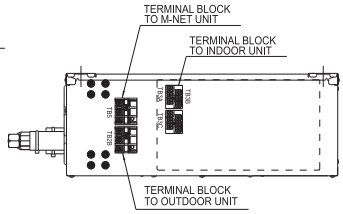

4 POSITION OF THE CENTER OF GRAVITY

4-1. OUTDOOR UNIT

Unit: inch (mm)

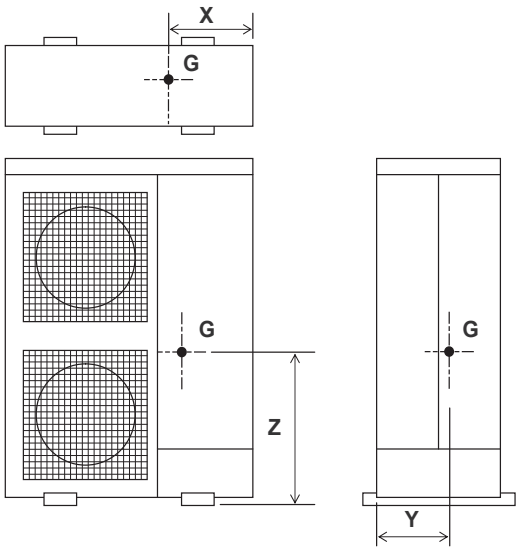

Model name	X	Y	Z
MXZ-8C48NA MXZ-4C36NAHZ MXZ-5C42NAHZ MXZ-8C48NAHZ	15 (380)	6-5/16 (160)	23-1/16 (586)
MXZ-8C60NA	15-3/8 (390)	7-3/16 (182)	22-15/16 (582)

5 WIRING DIAGRAM

5-1. OUTDOOR UNIT
MXZ-8C48NA

SYMBOL	NAME
TB1	Terminal Block 〈Power Supply〉
TB1B	Terminal Block 〈Branch Box〉
TB3	Terminal Block 〈Branch Box/Outdoor Transmission Line〉
TB7	Terminal Block 〈Centralized Control Transmission Line〉
FUSE1, FUSE2	Fuse 〈T20AL250V〉
MC	Motor For Compressor
MF1, MF2	Fan Motor
21S4	Solenoid Valve Coil 〈4-Way Valve〉
63H	High Pressure Switch
63HS	High Pressure Sensor
63LS	Low Pressure Sensor
SV1	Solenoid Valve Coil 〈Bypass Valve〉
TH2	Thermistor 〈Hic Pipe〉
TH3	Thermistor 〈Outdoor Liquid Pipe〉
TH4	Thermistor 〈Compressor〉
TH6	Thermistor 〈Suction Pipe〉
TH7	Thermistor 〈Ambient〉

SYMBOL	NAME
TH8	Thermistor 〈Heat Sink〉
LEV-A, LEV-B	Linear Expansion Valve
DCL	Reactor
P.B.	Power Circuit Board
U/V/W	Connection Terminal 〈U/V/W-Phase〉
LI	Connection Terminal 〈L-Phase〉
NI	Connection Terminal 〈N-Phase〉
DCL1, DCL2	Connection Terminal 〈Reactor〉
IGBT	Power Module
EI, E2, E3, E4	ConnectionTerminal 〈Electrical Parts Box〉
MULTI.B.	Multi Controller Circuit Board
SW1	Switch 〈Display Selection〉
SW2	Switch 〈Function Selection〉
SW3	Switch 〈Test Run〉
SW4	Switch 〈Model Selection〉
SW5	Switch 〈Function Selection〉
SW6	Switch 〈Function Selection〉
SW7	Switch 〈Function Selection〉
SW8	Switch 〈Model Selection〉

SYMBOL	NAME
SW9	Switch 〈Function Selection〉
SWU1	Switch 〈Unit Address Selection, ones digit〉
SWU2	Switch 〈Unit Address Selection, tens digit〉
CNS1	Connector 〈Branch Box/Outdoor Transmission Line〉
CNS2	Connector 〈Centralized Control Transmission Line〉
SS	Connector 〈Connection For Option〉
CN3D	Connector 〈Connection For Option〉
CN3S	Connector 〈Connection For Option〉
CN3N	Connector 〈Connection For Option〉
CN51	Connector 〈Connection For Option〉
LED1, LED2	LED 〈Operation Inspection Display〉
LED3	LED 〈Power Supply to Main Microcomputer〉
F1, F2	Fuse 〈T6.3AL250V〉
X501～505	Relay
M-NET P.B.	M-NET Power Circuit Board
TB1	ConnectionTerminal 〈Electrical Parts Box〉

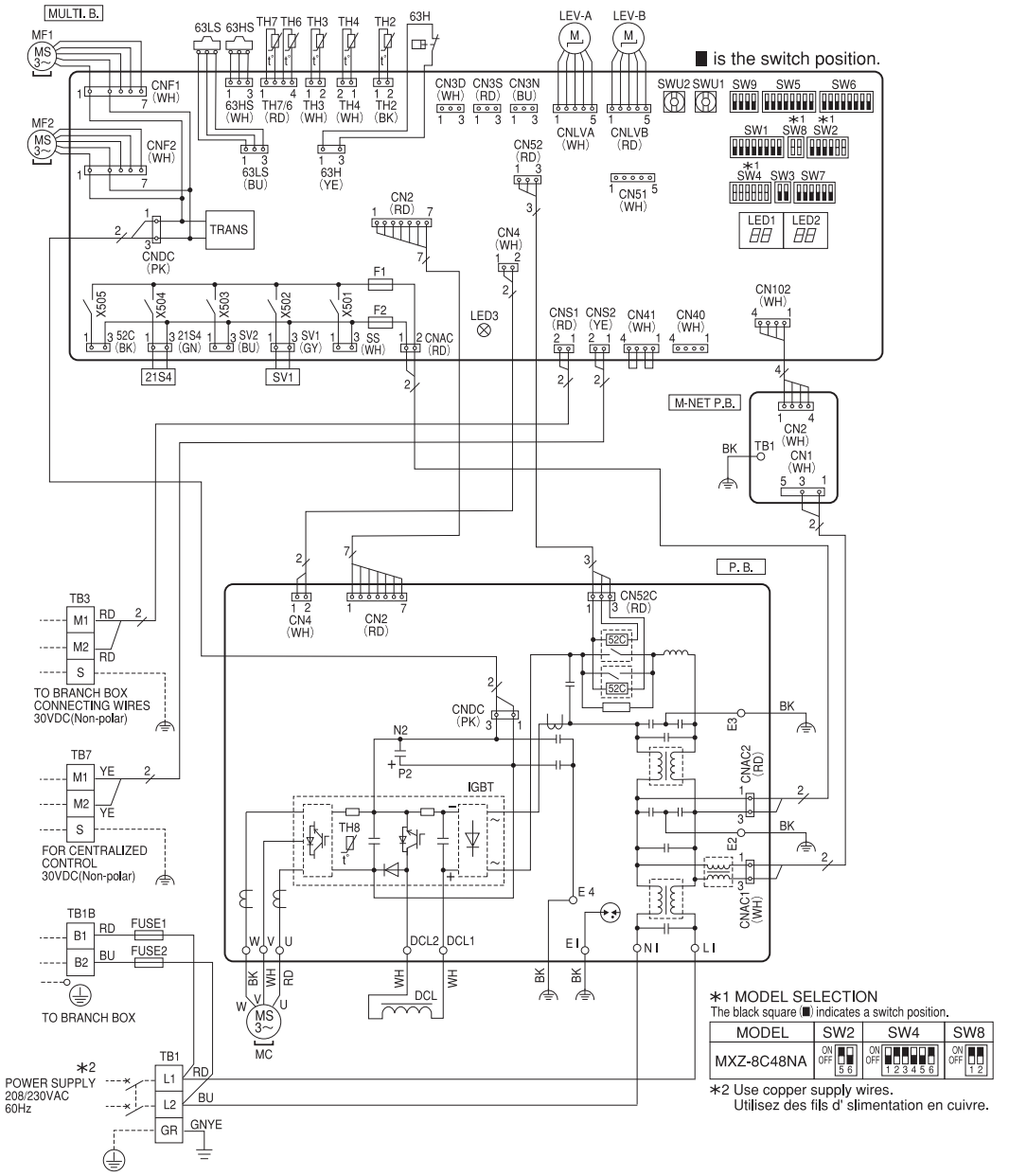

MXZ-8C60NA

SYMBOL	NAME
TB1	Terminal Block 〈Power Supply〉
TB1B	Terminal Block 〈Branch Box〉
TB3	Terminal Block 〈Branch Box/Outdoor Transmission Line〉
TB7	Terminal Block 〈Centralized Control Transmission Line〉
FUSE1, FUSE2	Fuse 〈T20AL250V〉
MC	Motor For Compressor
MF1, MF2	Fan Motor
21S4	Solenoid Valve Coil 〈4-Way Valve〉
63H	High Pressure Switch
63HS	High Pressure Sensor
63LS	Low Pressure Sensor
SV1	Solenoid Valve Coil 〈Bypass Valve〉
TH2	Thermistor 〈Hic Pipe〉
TH3	Thermistor 〈Outdoor Liquid Pipe〉
TH4	Thermistor 〈Compressor〉
TH6	Thermistor 〈Suction Pipe〉
TH7	Thermistor 〈Ambient〉

SYMBOL	NAME
TH8	Thermistor 〈Heat Sink〉
LEV-A, LEV-B	Linear Expansion Valve
DCL	Reactor
P.B.	Power Circuit Board
U/V/W	Connection Terminal 〈U/V/W-Phase〉
LI	Connection Terminal 〈L-Phase〉
NI	Connection Terminal 〈N-Phase〉
DCL1, DCL2	Connection Terminal 〈Reactor〉
IGBT	Power Module
EI, E2, E3, E4	ConnectionTerminal 〈Electrical Parts Box〉
MULTI.B.	Multi Controller Circuit Board
SW1	Switch 〈Display Selection〉
SW2	Switch 〈Function Selection〉
SW3	Switch 〈Test Run〉
SW4	Switch 〈Model Selection〉
SW5	Switch 〈Function Selection〉
SW6	Switch 〈Function Selection〉
SW7	Switch 〈Function Selection〉
SW8	Switch 〈Model Selection〉

SYMBOL	NAME
SW9	Switch 〈Function Selection〉
SWU1	Switch 〈Unit Address Selection, ones digit〉
SWU2	Switch 〈Unit Address Selection, tens digit〉
CNS1	Connector 〈Branch Box/Outdoor Transmission Line〉
CNS2	Connector 〈Centralized Control Transmission Line〉
SS	Connector 〈Connection For Option〉
CN3D	Connector 〈Connection For Option〉
CN3S	Connector 〈Connection For Option〉
CN3N	Connector 〈Connection For Option〉
CN51	Connector 〈Connection For Option〉
LED1, LED2	LED 〈Operation Inspection Display〉
LED3	LED 〈Power Supply to Main Microcomputer〉
F1, F2	Fuse 〈T6.3AL250V〉
X501～505	Relay
M-NET P.B.	M-NET Power Circuit Board
TB1	ConnectionTerminal 〈Electrical Parts Box〉

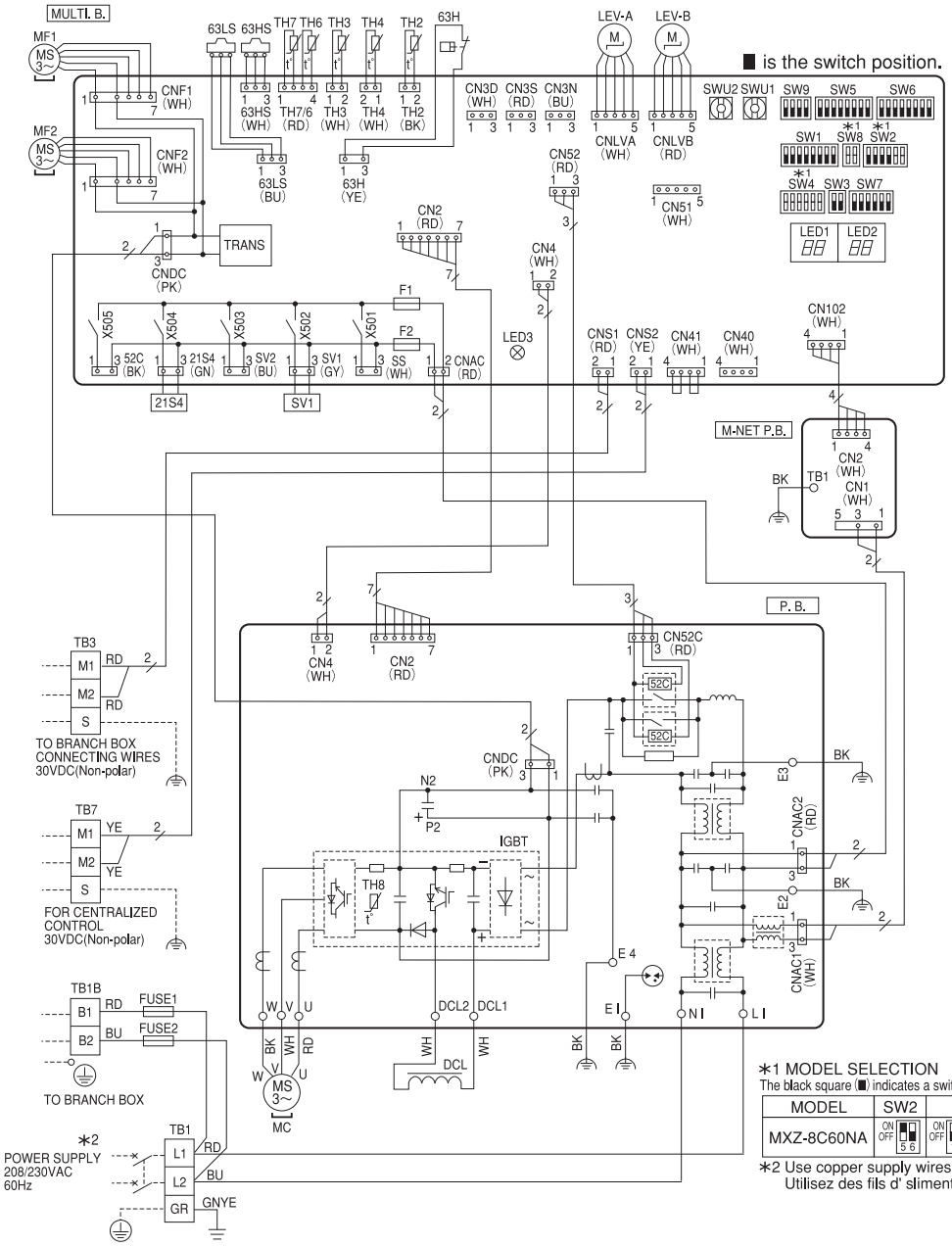

∗1 MODEL SELECTION
The black square (■) indicates a switch position.

MODEL	SW2	SW4	SW8
MXZ-8C60NA	ON OFF 5 6	ON OFF 1 2 3 4 5 6	ON OFF 1 2

∗2 Use copper supply wires.
Utilisez des fils d' slimentation en cuivre.

MXZ-4C36NAHZ MXZ-5C42NAHZ MXZ-8C48NAHZ

SYMBOL	NAME
TB1	Terminal Block 〈Power Supply〉
TB1B	Terminal Block 〈Branch Box〉
TB3	Terminal Block 〈Branch Box/Outdoor Transmission Line〉
TB7	Terminal Block 〈Centralized Control Transmission Line〉
FUSE1, FUSE2	Fuse 〈T20AL250V〉
MC	Motor For Compressor
MF1, MF2	Fan Motor
21S4	Solenoid Valve Coil 〈4-Way Valve〉
63H	High Pressure Switch
63HS	High Pressure Sensor
63LS	Low Pressure Sensor
SV1	Solenoid Valve Coil 〈Bypass Valve〉
SV2	Solenoid Valve 〈Switching Valve〉
BH	Base Heater
TH2	Thermistor 〈Hic Pipe〉
TH3	Thermistor 〈Outdoor Liquid Pipe〉
TH4	Thermistor 〈Compressor〉
TH6	Thermistor 〈Suction Pipe〉

SYMBOL	NAME
TH7	Thermistor 〈Ambient〉
TH8	Thermistor 〈Heat Sink〉
LEV-A, LEV-B	Linear Expansion Valve
DCL	Reactor
P.B.	Power Circuit Board
U/V/W	Connection Terminal 〈U/V/W-Phase〉
LI	Connection Terminal 〈L-Phase〉
NI	Connection Terminal 〈N-Phase〉
DCL1, DCL2	Connection Terminal 〈Reactor〉
IGBT	Power Module
EI, E2, E3, E4	ConnectionTerminal 〈Electrical Parts Box〉
MULTI.B.	Multi Controller Circuit Board
SW1	Switch 〈Display Selection〉
SW2	Switch 〈Function Selection〉
SW3	Switch 〈Test Run〉
SW4	Switch 〈Model Selection〉
SW5	Switch 〈Function Selection〉
SW6	Switch 〈Function Selection〉
SW7	Switch 〈Function Selection〉
SW8	Switch 〈Model Selection〉

SYMBOL	NAME
SW9	Switch 〈Function Selection〉
SWU1	Switch 〈Unit Address Selection, ones digit〉
SWU2	Switch 〈Unit Address Selection, tens digit〉
CNS1	Connector 〈Branch Box/Outdoor Transmission Line〉
CNS2	Connector 〈Centralized Control Transmission Line〉
SS	Connector 〈Connection For Option〉
CN3D	Connector 〈Connection For Option〉
CN3S	Connector 〈Connection For Option〉
CN3N	Connector 〈Connection For Option〉
CN51	Connector 〈Connection For Option〉
LED1, LED2	LED 〈Operation Inspection Display〉
LED3	LED 〈Power Supply to Main Microcomputer〉
F1, F2	Fuse 〈T6.3AL250V〉
X501～505	Relay
M-NET P.B.	M-NET Power Circuit Board
TB1	ConnectionTerminal 〈Electrical Parts Box〉

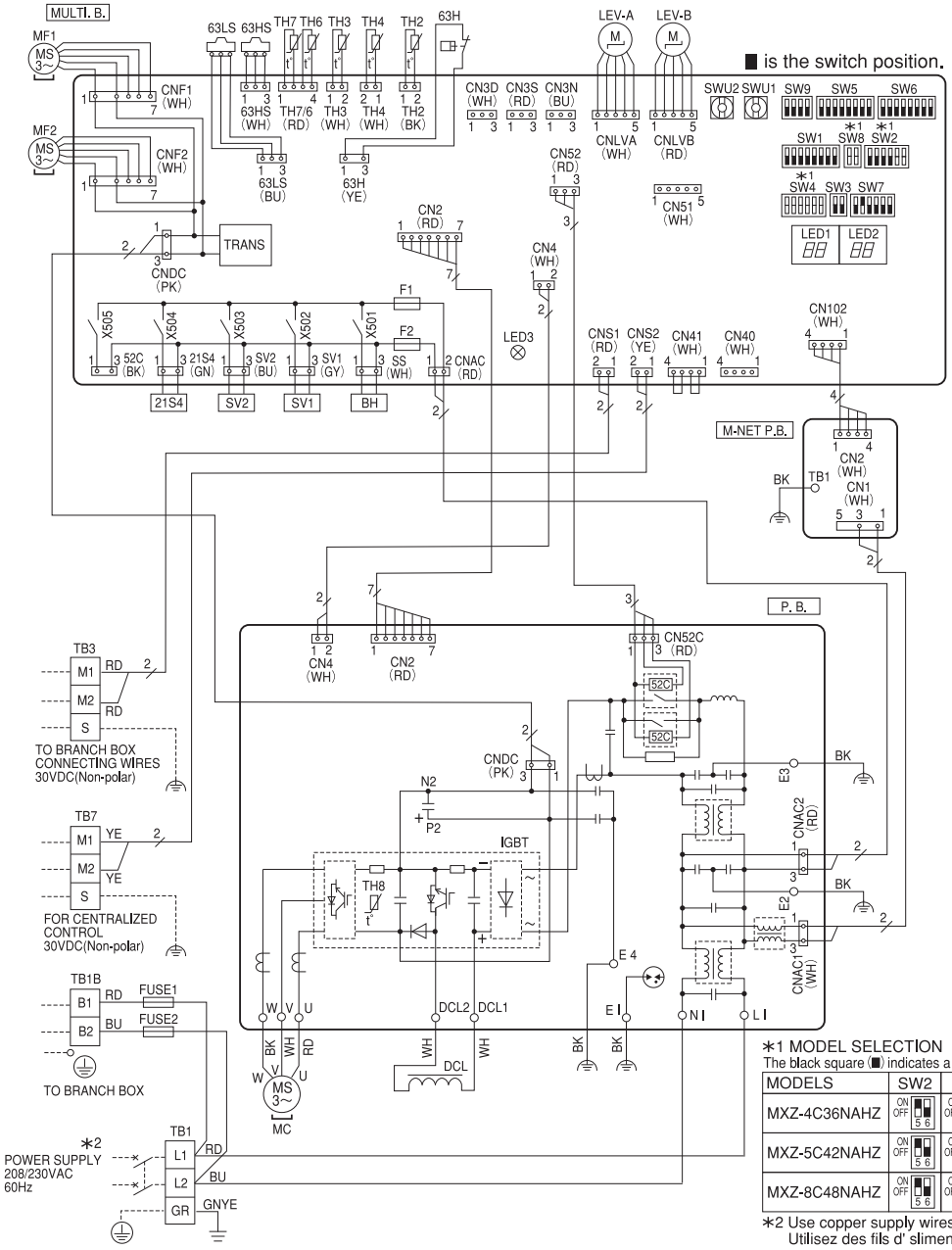

∗1 MODEL SELECTION

The black square (■) indicates a switch position.

MODELS	SW2	SW4	SW8
MXZ-4C36NAHZ	ON OFF 5 6	ON OFF 1 2 3 4 5 6	ON OFF 1 2
MXZ-5C42NAHZ	ON OFF 5 6	ON OFF 1 2 3 4 5 6	ON OFF 1 2
MXZ-8C48NAHZ	ON OFF 5 6	ON OFF 1 2 3 4 5 6	ON OFF 1 2

∗2 Use copper supply wires.
Utilisez des fils d' slimentation en cuivre.

5-2. BRANCH BOX
PAC-MKA51BC PAC-MKA31BC

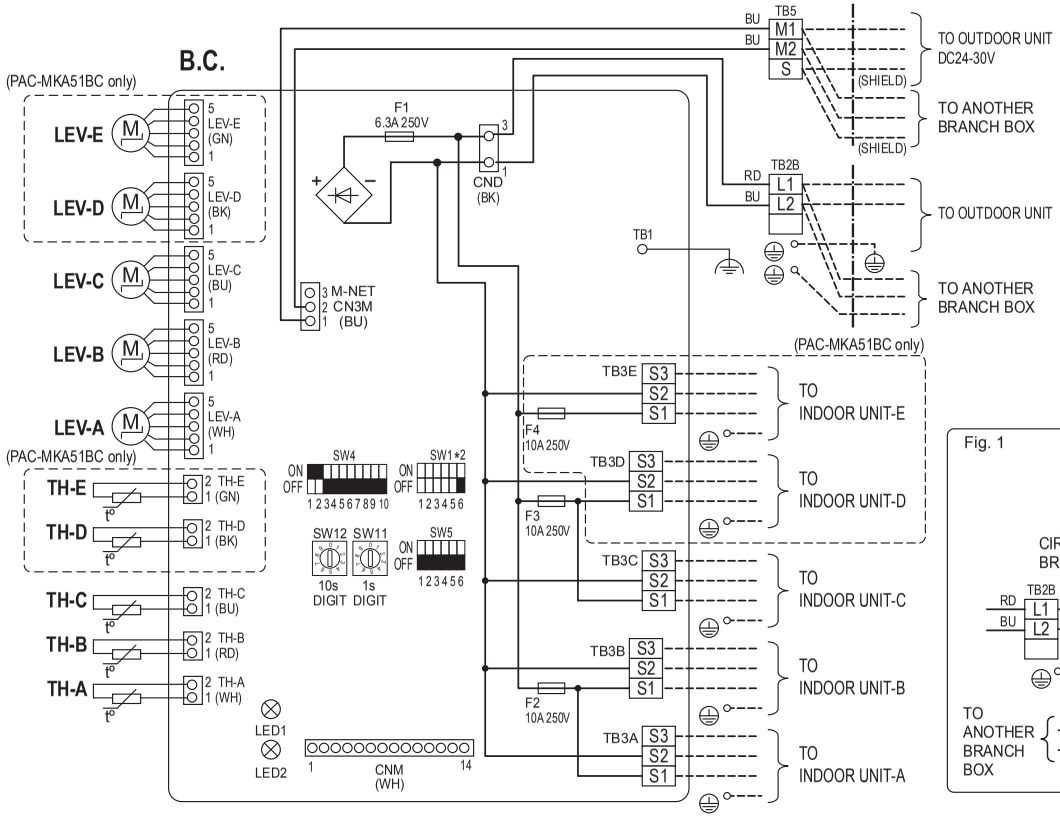

<Note>
1. At servicing for outdoor unit, always follow the wiring diagram of outdoor unit.
2. Caution for electrical work.
   • Use copper supply wires.
   (Utilisez des fils d'alimentation en cuivre.)
3. When work to supply power separately to Branch box and outdoor units are applied, refer to Fig. 1.
4. For the connection method, please refer to the Branch box Installation Manual.

<Symbols used in wiring diagram>
: Terminal block, : Connector
: Dip switch (■(black square) indicates a switch position)

Fig. 1

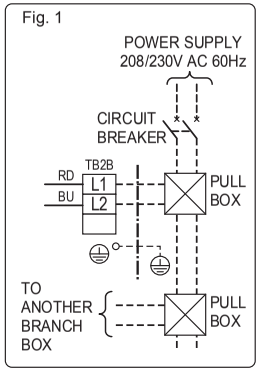

SYMBOL	NAME
B.C.	Branch box controller board
F1	Fuse <UL 6.3A 250V AC>
F2~F4	Fuse <UL 10A 250V AC> *1
SW1	Switch for indoor unit connection *2
SW4	Switch for function selection
SW5	Switch for function selection
CNM	Connector <Connection for service>
LED1,2	Light emitting diode *3
TB3A~E	Terminal block <To Indoor unit-A~E> *4
SW11	Address Setting ones digit
SW12	Address Setting tens digit
LEV-A~E	Linear expansion valve *4
TH-A~E	Thermistor <Gas pipe> *4
TB2B	Terminal block <To Power Supply>
TB5	Transmission line

*1 F4 for PAC-MKA51BC only

*2 SW1 setting

		OFF	ON	
SW1-1	INDOOR UNIT-A	NOT CONNECT	CONNECT	
SW1-2	INDOOR UNIT-B	NOT CONNECT	CONNECT	
SW1-3	INDOOR UNIT-C	NOT CONNECT	CONNECT	
SW1-4	INDOOR UNIT-D	NOT CONNECT	CONNECT	PAC-MKA 51BC only
SW1-5	INDOOR UNIT-E	NOT CONNECT	CONNECT	
SW1-6	NO USE			

After each indoor unit is connected to the outdoor unit, turn on the switch corresponding to each indoor unit. For example, when the indoor units are connected to INDOOR UNIT-A and C, turn SW1-1 and SW1-3 to on.

*3 LED on Branch box controller board for service

• start-up

Mark	Meaning	Function
LED 1 LED 2	Main power supply	Main power supply (208/230V) Power on → Lamps are lit

• normal operating

Mark	Meaning	Function
LED 1	Main power supply	Lamp is lit
LED 2	Total number of indoor units	Blink depend on the total number <example> The total number is 2 ① Blink 2 times. ② Turn off for 3 sec. ③ Repeat ① to ②.

*4 D and E for PAC-MKA51BC only.

<Combination of indoor units>
Enter the location of combined indoor units with model name in each blank below because it is necessary for service and maintenance.

Indoor unit-A	Indoor unit-B	Indoor unit-C	Indoor unit-D	Indoor unit-E

6-1. SELECTION OF COOLING/HEATING UNITS
MXZ-8C48NA MXZ-8C60NA
MXZ-4C36NAHZ MXZ-5C42NAHZ MXZ-8C48NAHZ MXZ-8C60NAHZ

How to determine the capacity when less than or equal 100% indoor model size units are connected in total:

The purpose of this flow chart is to select the indoor and outdoor units. For other purposes, this flow chart is intended only for reference.

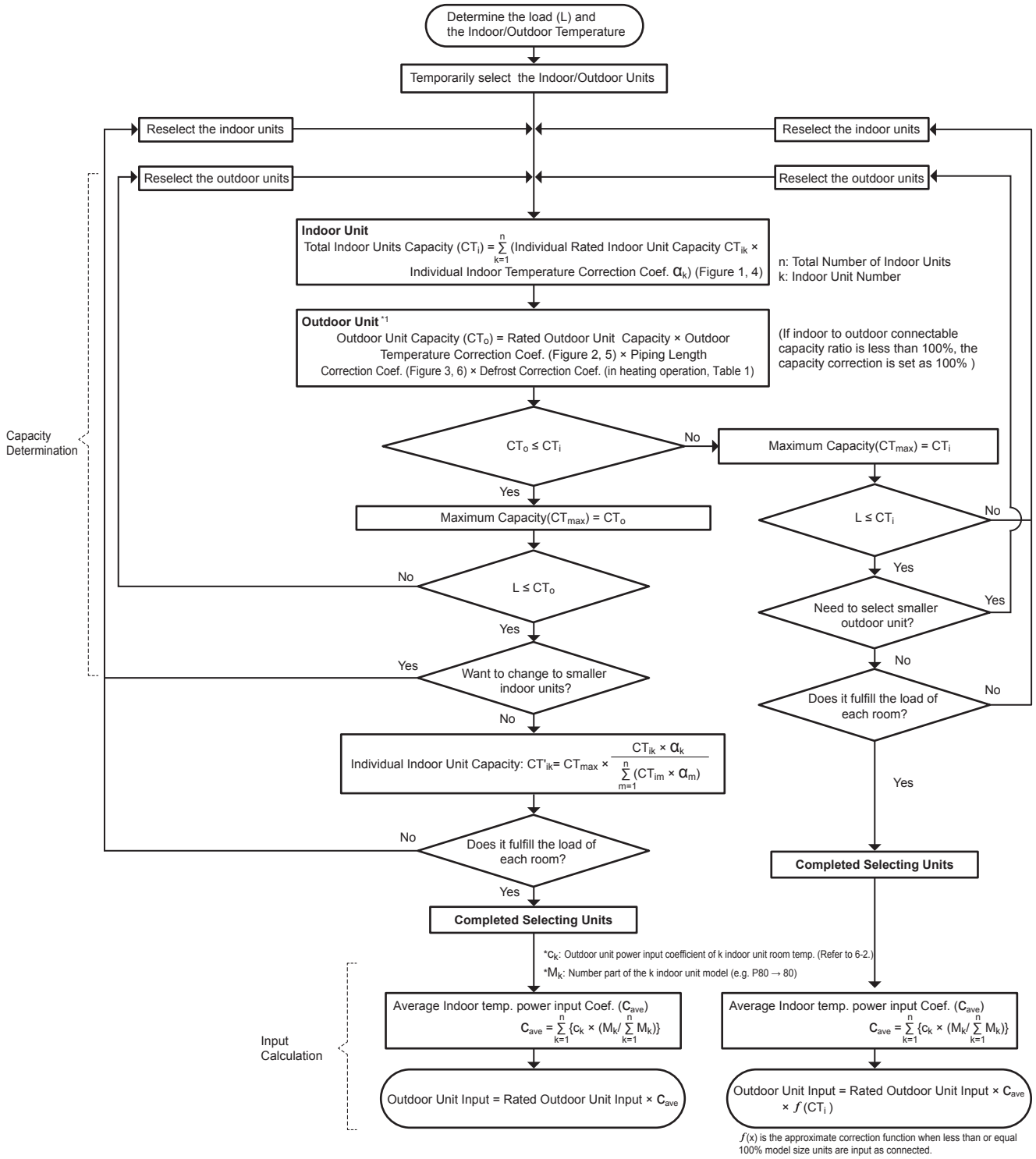

How to determine the capacity when greater than 100% indoor model size units are connected in total:

The purpose of this flow chart is to select the indoor and outdoor units. For other purposes, this flow chart is intended only for reference.

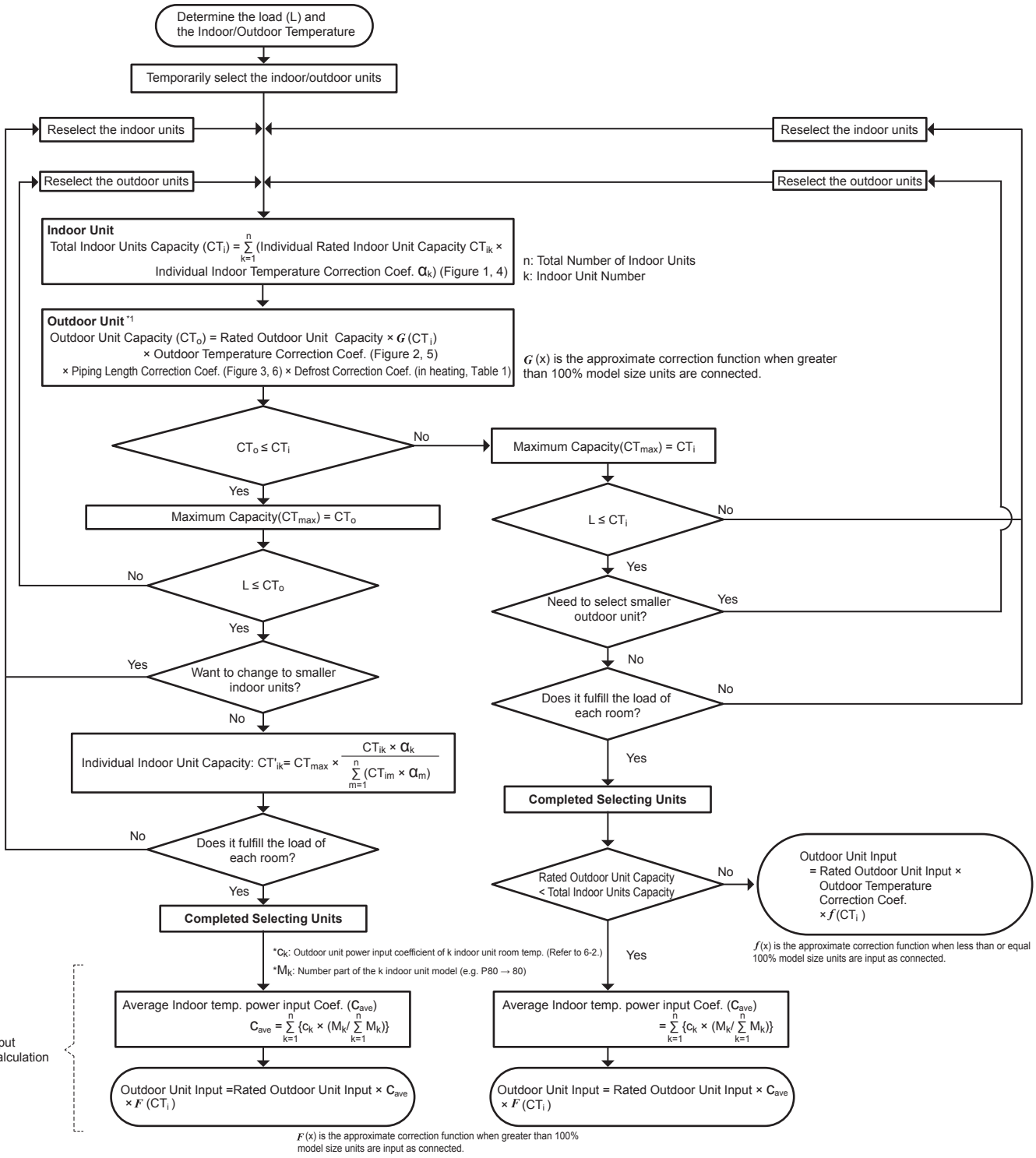

<Cooling>

Design Condition	
Outdoor Design Dry Bulb Temperature	**98.6ºF (37.0ºC)**
Total Cooling Load	**29.6 kBTU/h**
Room1	
Indoor Design Dry Bulb Temperature	**80.6ºF (27.0ºC)**
Indoor Design Wet Bulb Temperature	**68.0ºF (20.0ºC)**
Cooling Load	**13.6 kBTU/h**
Room2	
Indoor Design Dry Bulb Temperature	**75.2ºF (24.0ºC)**
Indoor Design Wet Bulb Temperature	**66.2ºF (19.0ºC)**
Cooling Load	**16.0 kBTU/h**
<Other>	
Indoor/Outdoor Equivalent Piping Length	**250 ft**

Capacity of indoor unit

	Model Number for indoor unit	Model 06	Model 09	Model 12	Model 15	Model 18	Model 24	Model 30	Model 36
M series	Model Capacity [KBtu/h]	6.0	9.0	12.0	14.0*1 15.0*2	17.0*3 17.2*4	22.5	—	—
P series		—	—	12.0	—	18.0	24.0	30.0	36.0
SEZ		—	8.1	11.5	14.1	17.2	—	—	—
SLZ		—	8.4	11.1	15.0	—	—	—	—
MVZ		—	—	12.0	—	18.0	24.0	30.0	36.0

*1 For MSZ-GE/GL15NA
*2 For the models other than *1 above
*3 For MFZ-KA/KJ18NA
*4 For the models other than *3 above

1. Cooling Calculation

(1) Temporary Selection of Indoor Units

Room1

MSZ-FH15 **15.0 kBTU/h (Rated)**

Room2

MSZ-FH18 **17.2 kBTU/h (Rated)**

(2) Total Indoor Units Capacity

15 + 18 = 33

(3) Selection of Outdoor Unit

The P36 outdoor unit is selected as total indoor units capacity is P33

MXZ-4C36 **36.0 kBTU/h**

(4) Total Indoor Units Capacity Correction Calculation

Room1

Indoor Design Wet Bulb Temperature Correction (68.0ºF) 1.02 (Refer to Figure 1)

Room2

Indoor Design Wet Bulb Temperature Correction (66.2ºF) 0.95 (Refer to Figure 1)

Total Indoor Units Capacity (CTi)

CTi = Σ (Indoor Unit Rating × Indoor Design Temperature Correction)
= 15.0 × 1.02 + 17.2 × 0.95
= 31.6 kBTU/h

(5) Outdoor Unit Correction Calculation

Outdoor Design Dry Bulb Temperature Correction (98.6ºF) 0.98 (Refer to Figure 2)

Piping Length Correction (250 ft) 0.93 (Refer to Figure 3)

Total Outdoor Unit Capacity (CTo)

CTo = Outdoor Rating × Outdoor Design Temperature Correction × Piping Length Correction
= 36.0 × 0.98 × 0.93
= 32.8 kBTU/h

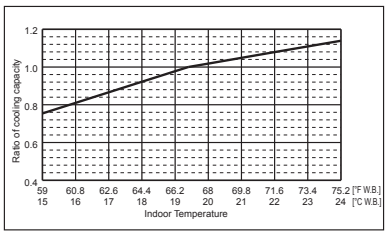

Figure 1 **Indoor unit temperature correction**
To be used to correct indoor unit only

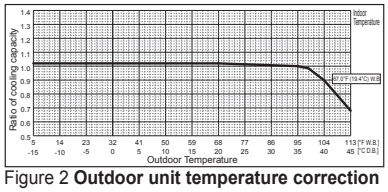

Figure 2 **Outdoor unit temperature correction**
To be used to correct outdoor unit only

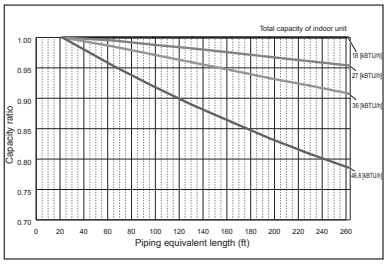

Figure 3 **Correction of refrigerant piping length**

(6) Determination of Maximum System Capacity

Comparison of Capacity between Total Indoor Units Capacity (CTi) and Total Outdoor Unit Capacity (CTo)

CTi = 31.6 < CTo = 32.8, thus, select CTi.

CTx = CTi = 31.6 kBTU/h

(7) Comparison with Essential Load

Against the essential load 29.6 kBTU/h, the maximum system capacity is 31.6 kBTU/h: Proper outdoor units have been selected.

(8) Calculation of Maximum Indoor Unit Capacity of Each Room

CTx = CTi, thus, calculate by the calculation below

Room1

Indoor Unit Rating × Indoor Design Temperature Correction
= 15.0 × 1.02
= 15.3 kBTU/h **OK: fulfills the load 13.6 kBTU/h**

Room2

Indoor Unit Rating × Indoor Design Temperature Correction
= 17.2 × 0.95
= 16.3 kBTU/h **OK: fulfills the load 16.0 kBTU/h**

Go on to the heating trial calculation since the selected units fulfill the cooling loads of Room 1, 2.

<Heating>

Design Condition	
Outdoor Design Wet Bulb Temperature	**35.6ºF (2.0ºC)**
Total Heating Load	**34.4 kBTU/h**
Room1	
Indoor Design Dry Bulb Temperature	**69.8ºF (21.0ºC)**
Heating Load	**16.3 kBTU/h**
Room2	
Indoor Design Dry Bulb Temperature	**73.4ºF (23.0ºC)**
Heating Load	**18.1 kBTU/h**
<Other> Indoor/Outdoor Equivalent Piping Length	**230 ft**

Capacity of indoor unit

	Model Number for indoor unit	Model 06	Model 09	Model 12	Model 15	Model 18	Model 24	Model 30	Model 36
M series	Model Capacity [KBtu/h]	6.0	10.9	13.6*1 14.4*2 13.0*3	18	20.3*1 21.6*2 21.0*3	27.6	—	—
P series		—	—	13.5	—	18.0	26.0	34.0	40.0
SEZ		—	10.9	13.6	18.0	17.2	—	—	—
SLZ		—	10.2	13.7	17.1	—	—	—	—
MVZ		—	—	12.0	—	18.0	27.0	34.0	40.0

*1 For MSZ-FH/FE12,18NA
*2 For MSZ-GE/GL12,18NA
*3 For the models other than *1 and *2 above

2. Heating Calculation

(1) Temporary Selection of Indoor Units

Room1

MSZ-FH15 **18.0 kBUT/h (Rated)**

Room2

MSZ-FH18 **20.3 kBUT/h (Rated)**

(2) Total Indoor Units Capacity

15 + 18 = 33

(3) Selection of Outdoor Unit

The P36 outdoor unit is selected as total indoor units capacity is P33

MXZ-4C36 **45.0 kBUT/h**

(4) Total Indoor Units Capacity Correction Calculation

Room1

Indoor Design Dry Bulb Temperature Correction (69.8ºF) 1.00 (Refer to Figure 4)

Room2

Indoor Design Dry Bulb Temperature Correction (73.4ºF) 0.92 (Refer to Figure 4)

Total Indoor Units Capacity (CTi)

CTi = Σ (Indoor Unit Rating × Indoor Design Temperature Correction)
= 18.0 × 1.00 + 20.3 × 0.92
= 36.7 kBTU/h

(5) Outdoor Unit Correction Calculation

Outdoor Design Wet Bulb Temperature Correction (35.6ºF) 1.0 (Refer to Figure 5)
Piping Length Correction (230 ft) 0.96 (Refer to Figure 6)
Defrost Correction 0.89 (Refer to Table 1)

Total Outdoor Unit Capacity (CTo)

CTo = Outdoor Unit Rating × Outdoor Design Temperature Correction × Piping Length Correction × Defrost Correction
= 45.0 × 1.0 × 0.96 × 0.89
= 38.4 kBTU/h

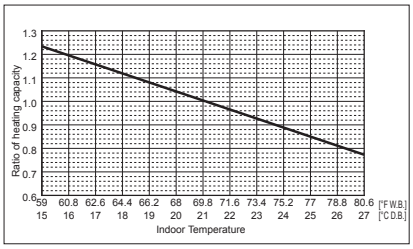

Figure 4 **Indoor unit temperature correction**
To be used to correct indoor unit only

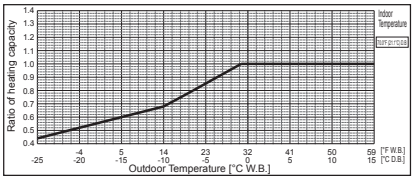

Figure 5 **Outdoor unit temperature correction**
To be used to correct outdoor unit only

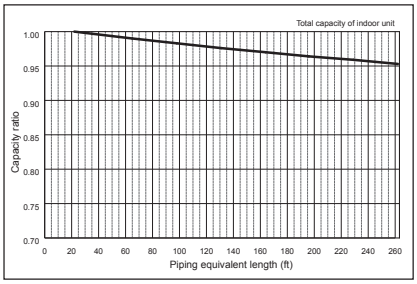

Figure 6 **Correction of refrigerant piping length**

Table 1 Table of correction factor at frost and defrost

Outdoor Intake temperature <W.B.°F (°C)>	43(6)	37(4)	36(2)	32(0)	28(−2)	25(−4)	21(−6)	18(−8)	14(−10)	5(−15)	−4(−20)	−13(−25)
Correction factor	1.0	0.98	0.89	0.88	0.89	0.9	0.95	0.95	0.95	0.95	0.95	0.95

(6) Determination of Maximum System Capacity

Comparison of Capacity between Total Indoor Units Capacity (CTi) and Total Outdoor Unit Capacity (CTo)

CTi = 36.7 < CTo = 38.4, thus, select CTi.

CTx = CTi = 36.7 kBTU/h

(7) Comparison with Essential Load

Against the essential load 34.4 kBTU/h, the maximum system capacity is 36.7 kBTU/h: Proper outdoor units have been selected.

(8) Calculation of Maximum Indoor Unit Capacity of Each Room

CTx = CTi, thus, calculate by the calculation below

Room1

Maximum Capacity × Room1 Capacity after the Temperature Correction/(Room1,2 Total Capacity after the Temperature Correction
= 36.7 × (18.0 × 1.00) / (18.0 × 1.00 + 20.3 × 0.92)
= 18.0 kBTU/h **OK: fulfills the load 16.3 kBTU/h**

Room2

Maximum Capacity × Room1 Capacity after the Temperature Correction/(Room1,2 Total Capacity after the Temperature Correction
= 36.7 × (20.3 × 0.92) / (18.0 × 1.00 + 20.3 × 0.92)
= 18.7 kBTU/h **OK: fulfills the load 18.1 kBTU/h**

Completed selecting units since the selected units fulfill the heating loads of Room 1, 2.

3. Power input of outdoor unit

Outdoor unit : MXZ-4C36
Indoor unit 1 : MSZ-FH15
Indoor unit 2 : MSZ-FH18

<Cooling>

(1) Rated power input of outdoor unit **2.57 kW**

(2) Calculation of the average indoor temperature power input coefficient

Coefficient of the outdoor unit for indoor unit 1 (Outdoor temp. 98.6°F [37.0°C] D.B., Indoor temp. 68.0°F [20.0°C] W.B.)
1.04 (Refer to "6-2. CORRECTING BY TEMPERATURE".)

Coefficient of the outdoor unit for indoor unit 2 (Outdoor temp. 98.6°F [37.0°C] D.B., Indoor temp. 64.4°F [18.0°C] W.B.)
0.85 (Refer to "6-2. CORRECTING BY TEMPERATURE".)

Average indoor temp. power input coefficient (C_{ave}) = $\sum_{k=1}^{n}\{c_k \times (M_k/\sum_{k=1}^{n} M_k)\}$

n: Total number of the indoor units
k: Number of the indoor unit
c_k: Outdoor unit power input coefficient of k indoor unit room temp.
M_k: Number part of the k indoor unit model (e.g. P80 → 80)

= 1.04 × 15/(15 + 18) + 0.85 × 18/(15 + 18)
= 0.94

(3) Coefficient of the partial load f(CTi)

Total Indoor units capacity
15 + 18 = 33, thus, f(CTi) = 0.9 (Refer to the tables in "9.STANDARD CAPACITY DIAGRAM".)

(4) Outdoor power input (Plo)

Maximum System Capacity (CTx) = Total Outdoor unit Capacity (CTo), so use the following formula
Plo = Outdoor unit Cooling Rated Power Input × Correction Coefficient of Indoor temperature × f(CTi)
= 2.57 × 0.94 × 0.9
= 2.2 kW

<Heating>

(1) Rated power input of outdoor unit **3.34 kW**

(2) Calculation of the average indoor temperature power input coefficient

Coefficient of the outdoor unit for indoor unit 1 (Outdoor temp. 26.6°F [−3°C] W.B., Indoor temp. 68.0°F [20°C] D.B.)
1.34 (Refer to "6-2. CORRECTING BY TEMPERATURE".)

Coefficient of the outdoor unit for indoor unit 2 (Outdoor temp. 26.6°F [−3°C] W.B., Indoor temp. 77.0°F [25°C] D.B.)
1.09 (Refer to "6-2. CORRECTING BY TEMPERATURE".)

Average indoor temp. power input coefficient (C_{ave}) = $\sum_{k=1}^{n}\{c_k \times (M_k/\sum_{k=1}^{n} M_k)\}$

n: Total number of the indoor units
k: Number of the indoor unit
c_k: Outdoor unit power input coefficient of k indoor unit room temp.
M_k: Number part of the k indoor unit model (e.g. P80 → 80)

= 1.34 × 15/(15 + 18) + 1.09 × 18/(15 + 18)
= 1.20

(3) Coefficient of the partial load f(CTi)

Total indoor units capacity
15 + 18 = 33, thus, f(CTi) = 0.9 (Refer to the tables in "9.STANDARD CAPACITY DIAGRAM".)

(4) Outdoor power input (Plo)

Maximum System Capacity (CTx) = Total Indoor unit Capacity (CTi), so use the following formula
Plo = Outdoor unit Heating Rated Power Input × Correction Coefficient of Indoor temperature × f(CTi)
= 3.34 × 1.20 × 0.9
= 3.61 kW

6-2. CORRECTING BY TEMPERATURE

MXZ-4C36/5C42/8C48NA(HZ), 8C60NA could have varied capacity at different designing temperature. Using the nominal cooling/heating capacity value and the ratio below, the capacity can be observed at various temperature.

<Cooling>

		MXZ	
		4C36	5C42
Nominal cooling capacity	BTU/h	36,000	48,000
Input	kW	2.57	3.13

		MXZ	
		8C48	8C60
Nominal cooling capacity	BTU/h	48,000	60,000
Input	kW	4.00	4.80

Figure 7 Indoor unit temperature correction
To be used to correct indoor unit capacity only

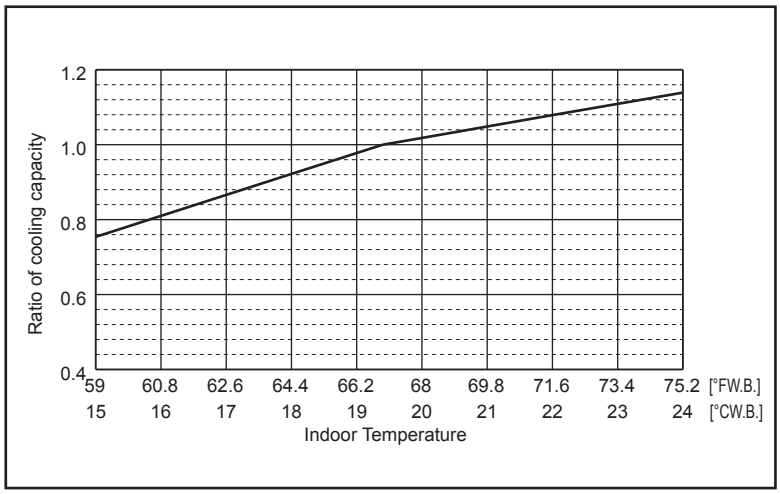

Figure 8 Outdoor unit temperature correction
To be used to correct outdoor unit capacity only

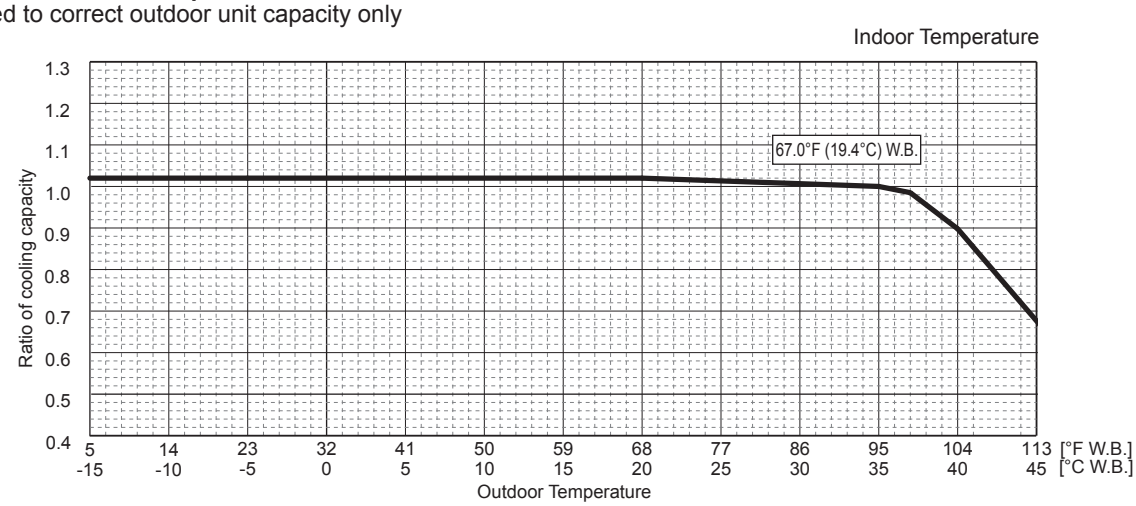

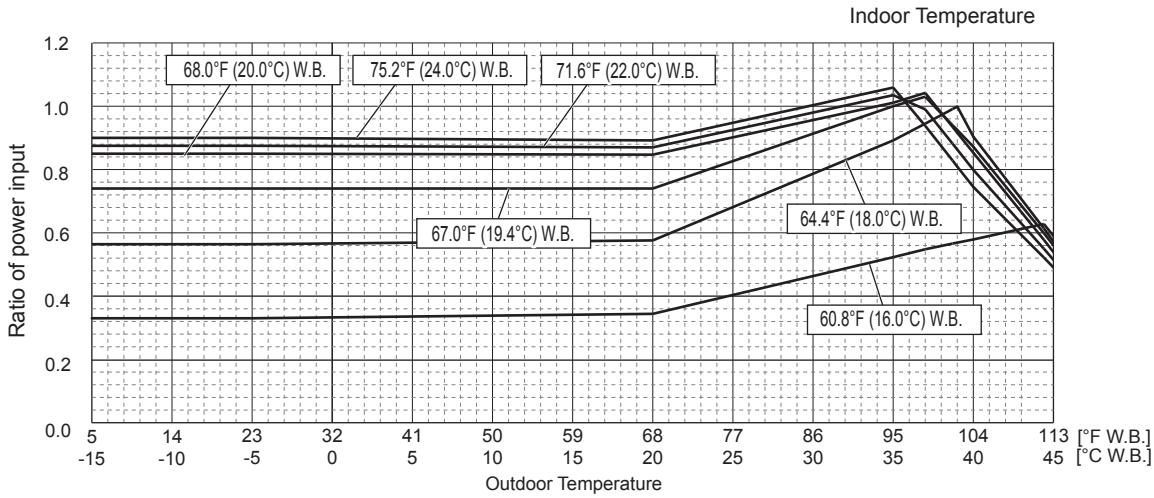

<Heating>

		MXZ	
		8C48NA	8C60NA
Nominal heating capacity	BTU/h	54,000	66,000
Input	kW	4.22	5.67

Figure 9 Indoor unit temperature correction
To be used to correct indoor unit capacity only

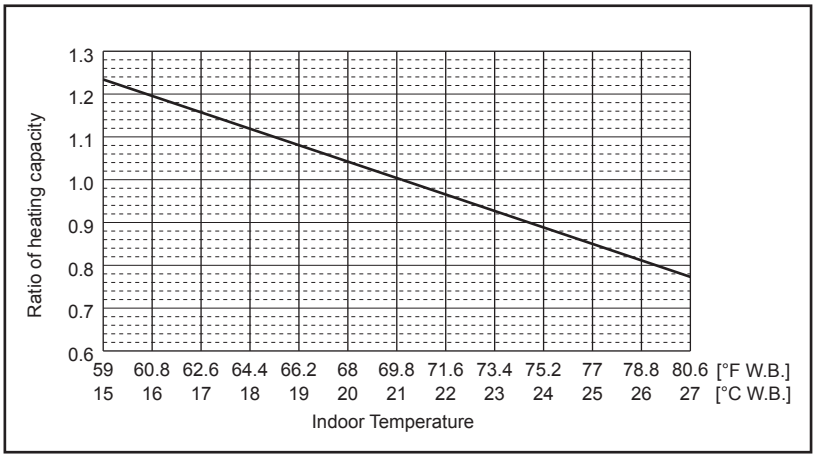

Figure 10 Outdoor unit temperature correction
To be used to correct outdoor unit capacity only

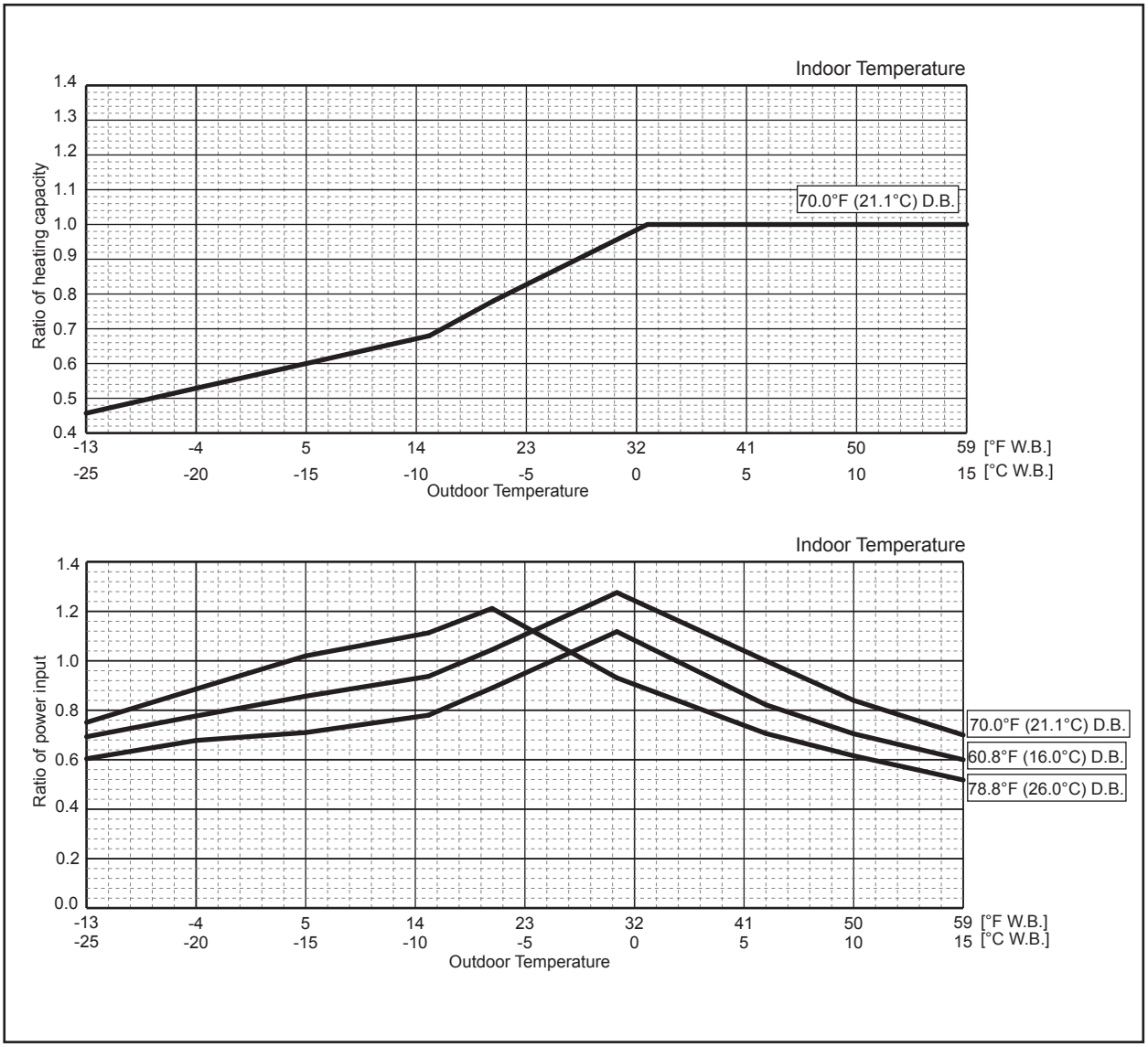

<Heating> (NAHZ)

		MXZ		
		4C36NAHZ	5C42NAHZ	8C48NAHZ
Nominal heating capacity	BTU/h	45,000	48,000	54,000
Input	kW	3.34	3.43	4.22

Figure 11 Indoor unit temperature correction
To be used to correct indoor unit capacity only

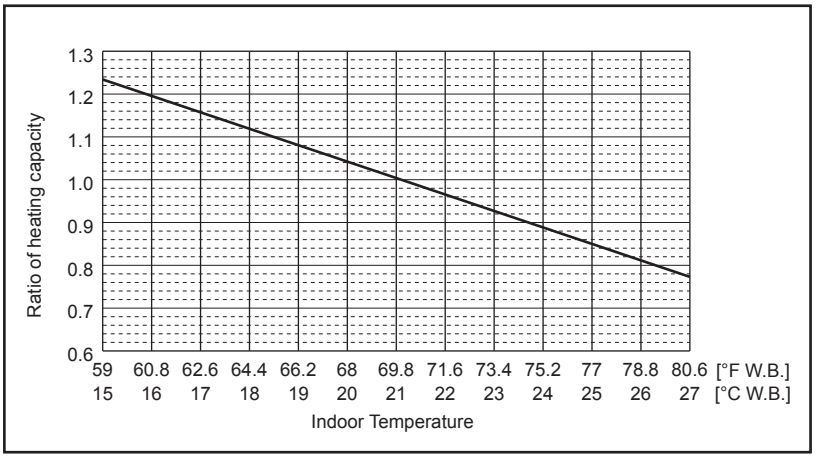

Figure 12 Outdoor unit temperature correction
To be used to correct outdoor unit capacity only

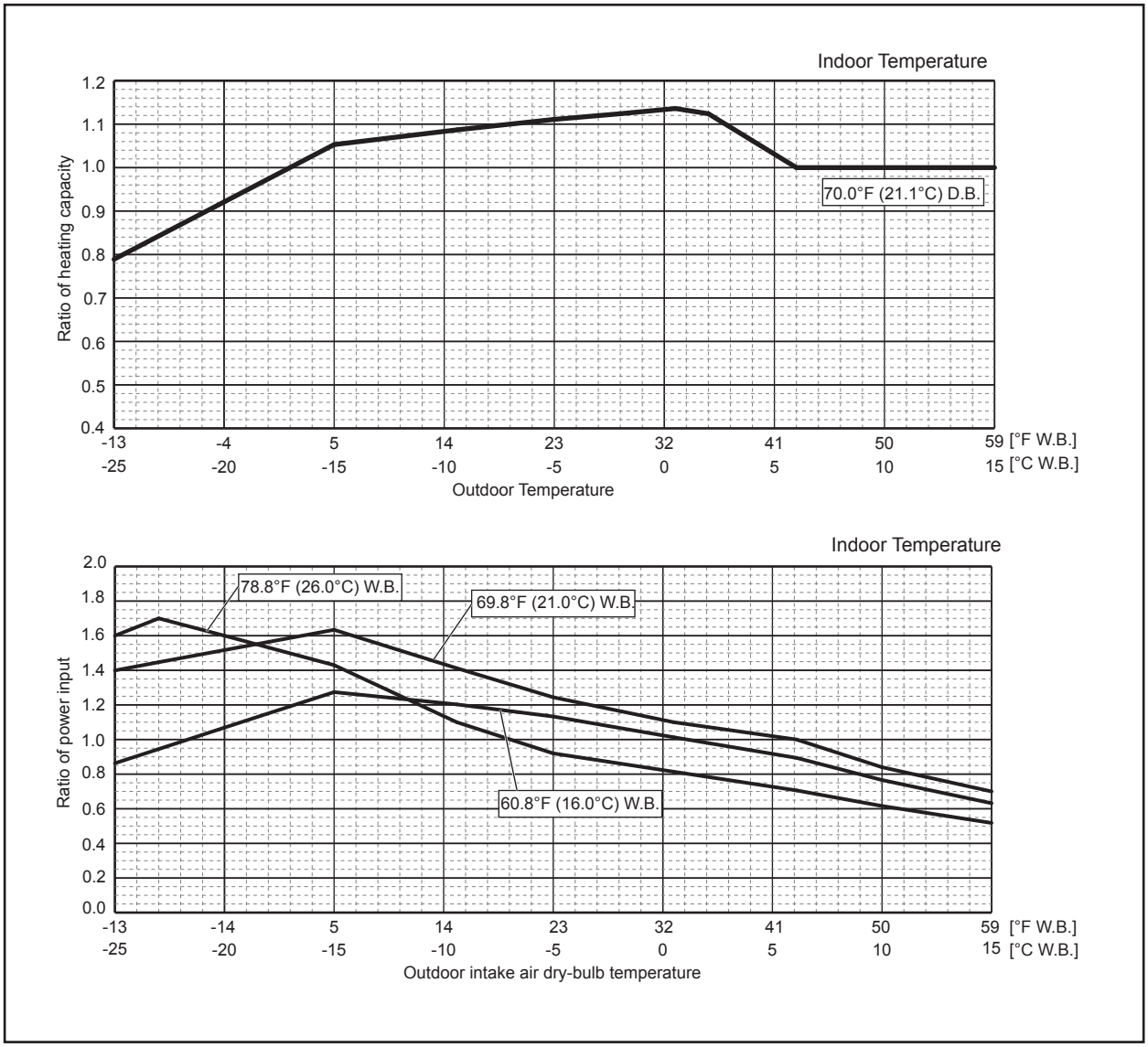

6-3. STANDARD OPERATION DATA (REFERENCE DATA)

Operation				Outdoor unit model			
				MXZ-4C36NAHZ		MXZ-5C42NAHZ	
Operating conditions	Ambient temperature	Indoor	DB/WB	80°F/67°F	70°F/60°F	80°F/67°F	70°F/60°F
		Outdoor		95°F/75°F	47°F/43°F	95°F/75°F	47°F/43°F
	Indoor unit	No. of connected units	Unit	4		4	
		No. of units in operation		4		4	
		Model	—	09 × 4		09 × 2 + 12 ×2	
	Piping	Main pipe	m	9.84 (3)		9.84 (3)	
		Branch pipe		14.76 (4.5)		14.76 (4.5)	
		Total pipe length		68.90 (21)		68.90 (21)	
	Fan speed		—	Hi		Hi	
	Amount of refrigerant		lb oz (kg)	17 lb 7 oz (7.9)		17 lb 7 oz (7.9)	
Outdoor unit	Electric current		A	14.1	18.7	17.2	19.1
	Voltage		V	230		230	
	Compressor frequency		Hz	59	74	70	80
LEV opening	Indoor unit		Pulse	112	128	129	128
Pressure	High pressure/Low pressure		MPaG	2.57/0.98	2.78/0.64	2.72/0.80	2.80/0.56
			PSIG	373/142	403/93	395/116	406/81
Temp. of each section	Outdoor unit	Discharge	°F [°C]	143.8 [62.1]	151.5 [66.4]	148.6 [64.8]	145.8 [63.2]
		Heat exchanger outlet		100.8 [38.2]	36.7 [2.6]	101.8 [38.8]	35.6 [2.0]
		Accumulator inlet		50.5 [10.3]	36.1 [2.3]	49.5 [9.7]	34.9 [1.6]
		Compressor inlet		47.1 [8.4]	34.0 [1.1]	45.3 [7.4]	32.7 [0.4]
	Indoor unit	LEV inlet		70.0 [21.1]	103.5 [39.7]	83.7 [28.7]	100.2 [37.9]
		Heat exchanger inlet		54.1 [12.3]	138.9 [59.4]	49.6 [9.8]	132.3 [55.7]

Operation				Outdoor unit model			
				MXZ-8C48NA/NAHZ		MXZ-8C60NA	
Operating conditions	Ambient temperature	Indoor	DB/WB	80°F/67°F	70°F/60°F	80°F/67°F	70°F/60°F
		Outdoor		95°F/75°F	47°F/43°F	95°F/75°F	47°F/43°F
	Indoor unit	No. of connected units	Unit	4		5	
		No. of units in operation		4		5	
		Model	—	12 × 4		09 × 3 + 15 + 18	
	Piping	Main pipe	m	9.84 (3)		9.84 (3)	
		Branch pipe		14.76 (4.5)		14.76 (4.5)	
		Total pipe length		68.90 (21)		83.79 (25.5)	
	Fan speed		—	Hi		Hi	
	Amount of refrigerant		lb oz (kg)	17 lb 7 oz (7.9)		20 lb (8.9)	
Outdoor unit	Electric current		A	22.1	21.9	20.4	24.4
	Voltage		V	230		230	
	Compressor frequency		Hz	86	91	45	51
LEV opening	Indoor unit		Pulse	112	132	187	229
Pressure	High pressure/Low pressure		MPaG	2.83/0.77	2.82/0.55	2.84/0.92	2.44/0.672
			PSIG	410/112	409/80	412/134	354/97.5
Temp. of each section	Outdoor unit	Discharge	°F [°C]	157.6 [69.8]	149.2 [65.1]	167 [75.0]	133.9 [56.6]
		Heat exchanger outlet		105.6 [40.9]	34.3 [1.3]	98.8 [37.1]	51.1 [10.2]
		Accumulator inlet		47.1 [8.4]	33.4 [0.8]	49.5 [9.7]	32.4 [0.2]
		Compressor inlet		42.4 [5.8]	30.6 [−0.8]	72.5 [22.5]	31.6 [−0.2]
	Indoor unit	LEV inlet		71.1 [21.7]	98.8 [37.1]	59.7 [15.4]	81.9 [27.7]
		Heat exchanger inlet		47.5 [8.6]	134.6 [57.0]	52.5 [11.4]	104.2 [40.1]

6-4. CORRECTING CAPACITY FOR CHANGES IN THE LENGTH OF REFRIGERANT PIPING

(1) During cooling, obtain the ratio (and the equivalent piping length) of the outdoor units rated capacity and the total in-use indoor capacity, and find the capacity ratio corresponding to the standard piping length from Figure 13 to 16. Then multiply by the cooling capacity from Figure 7 and 8 in "6-2. CORRECTION BY TEMPERATURE" to obtain the actual capacity.

(2) During heating, find the equivalent piping length, and find the capacity ratio corresponding to standard piping length from Figure 17 to 18. Then multiply by the heating capacity from Figure 9 to 12 in "6-2. CORRECTION BY TEMPERATURE" to obtain the actual capacity.

(1) Capacity Correction Curve

Figure 13 MXZ-8C48NA <Cooling>

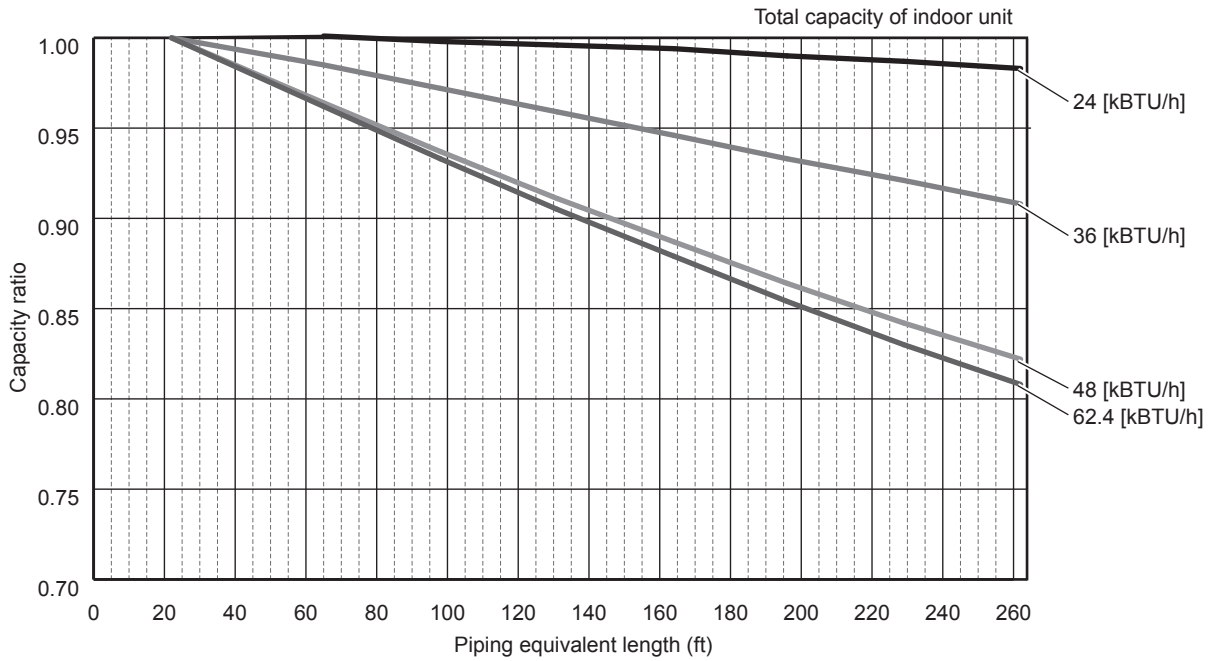

Figure 14 MXZ-8C60NA <Cooling>

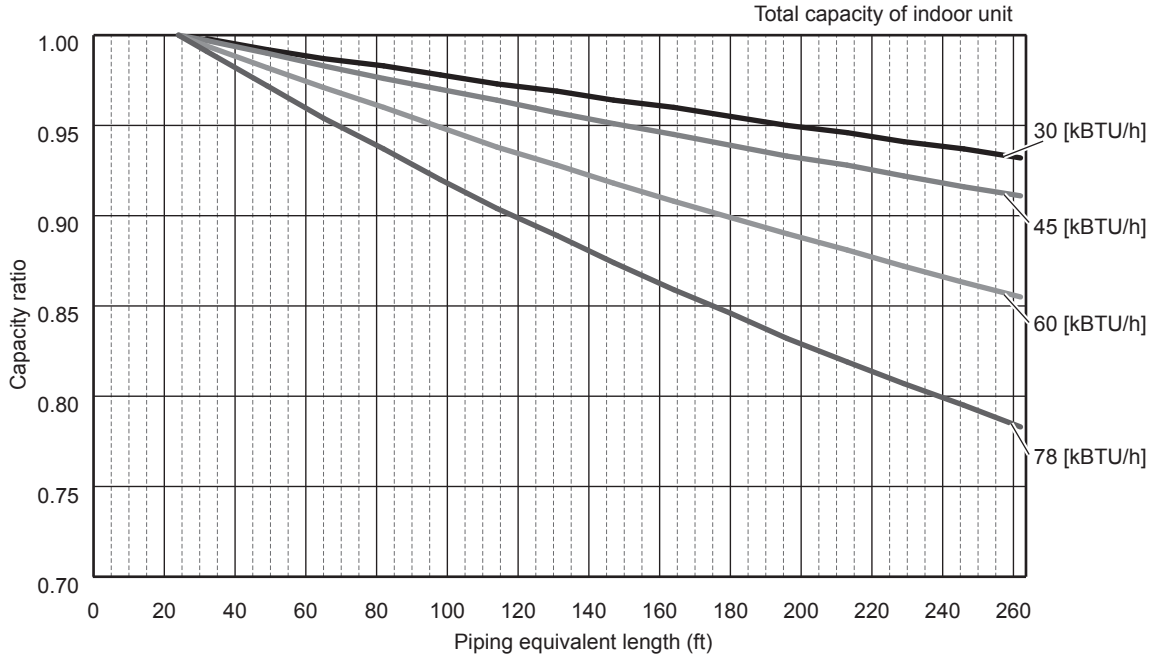

Figure 15 MXZ-4C36NAHZ <Cooling>

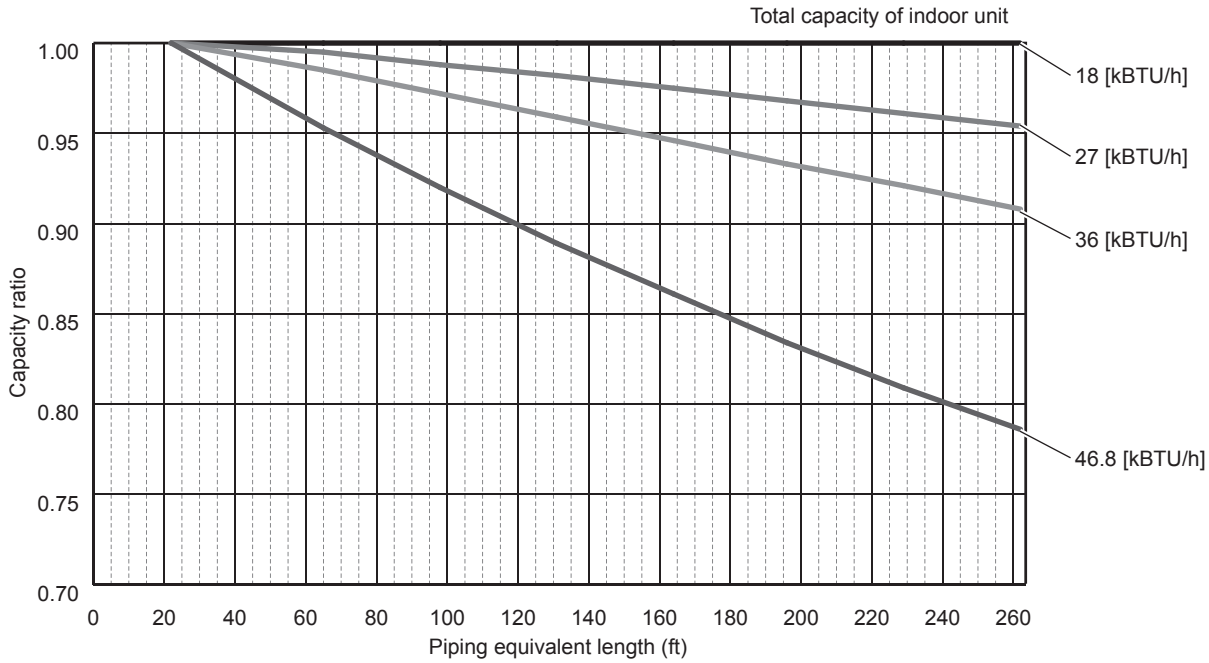

Figure 16 MXZ-5C42NAHZ <Cooling>

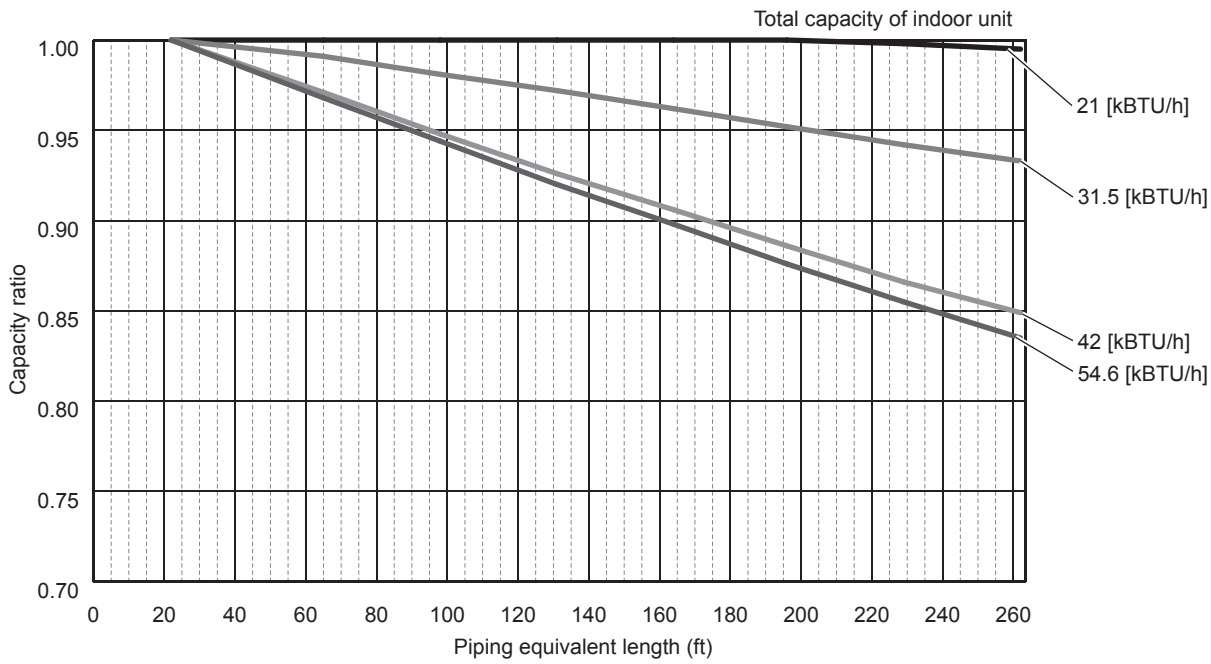

Figure 17 MXZ-4C36NAHZ/5C42NAHZ/8C48NA <Heating>

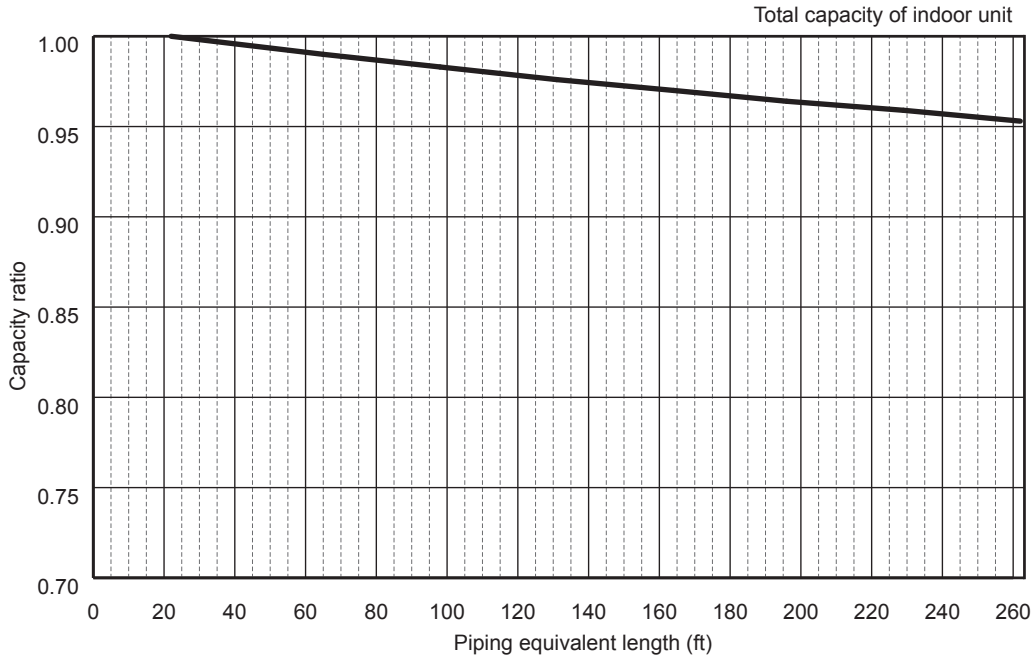

Figure 18 MXZ-8C60NA <Heating>

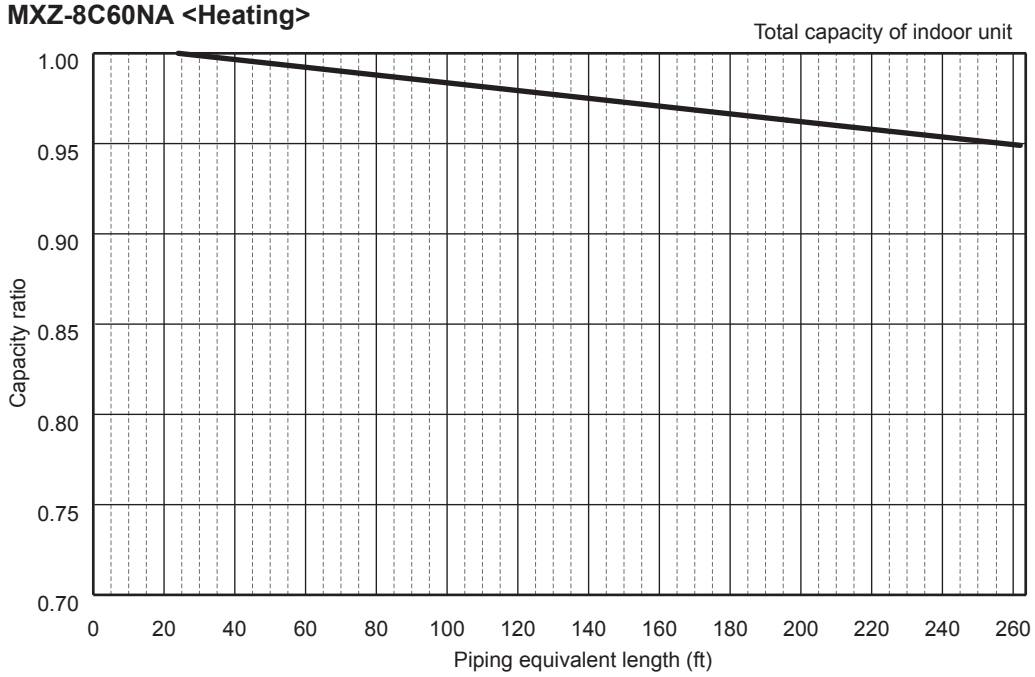

(2) Method for Obtaining the Equivalent Piping Length

Equivalent length for type P60 = (length of piping to farthest indoor unit) + (0.3 x number of bends in the piping) (m)
Length of piping to farthest indoor unit: type P60.....80 m

6-4-1. Correction of heating capacity for frost and defrosting

If heating capacity has been reduced due to frost formation or defrosting, multiply the capacity by the appropriate correction factor from the following table to obtain the actual heating capacity.

Correction factor diagram

Outdoor Intake temperature <W.B.°F (°C)>	43(6)	39(4)	36(2)	32(0)	28(−2)	25(−4)	21(−6)	18(−8)	14(−10)	5(−15)	−4(−20)	−13(−25)
Correction factor	1.0	0.98	0.89	0.88	0.89	0.9	0.95	0.95	0.95	0.95	0.95	0.95

REFRIGERANT SYSTEM DIAGRAM
MXZ-8C48NA

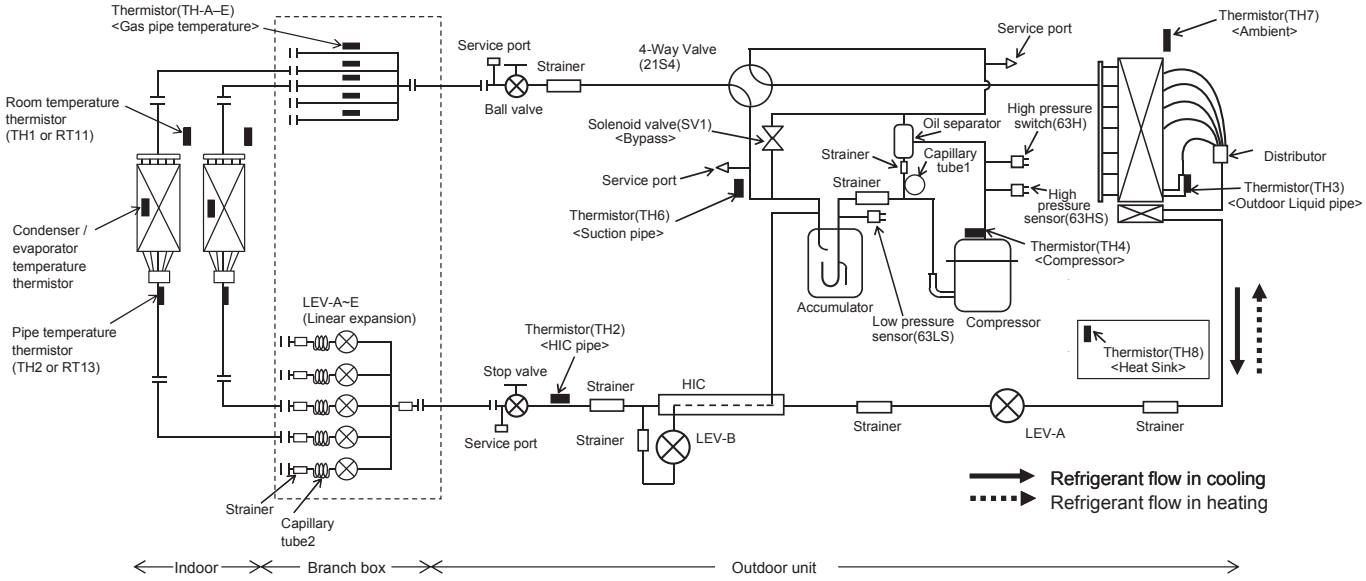

Unit: inch (mm)

		Capillary tube 1 (For return of oil from oil separator)	Capillary tube 2 behind LEV (in cooling mode)
Outdoor unit	MXZ-8C48NA	ø0.098 x ø0.031 x L(39-1/2) (ø2.5 x ø0.8 x L1000)	
Branch box	PAC-MKA51BC	———	(ø0.157 x ø0.117 x L(5-1/8)) x 5 ((ø4 x ø3.0 x L130) x 5)
	PAC-MKA31BC	———	(ø0.157 x ø0.117 x L(5-1/8)) x 3 ((ø4 x ø3.0 x L130) x 3)

MXZ-8C60NA

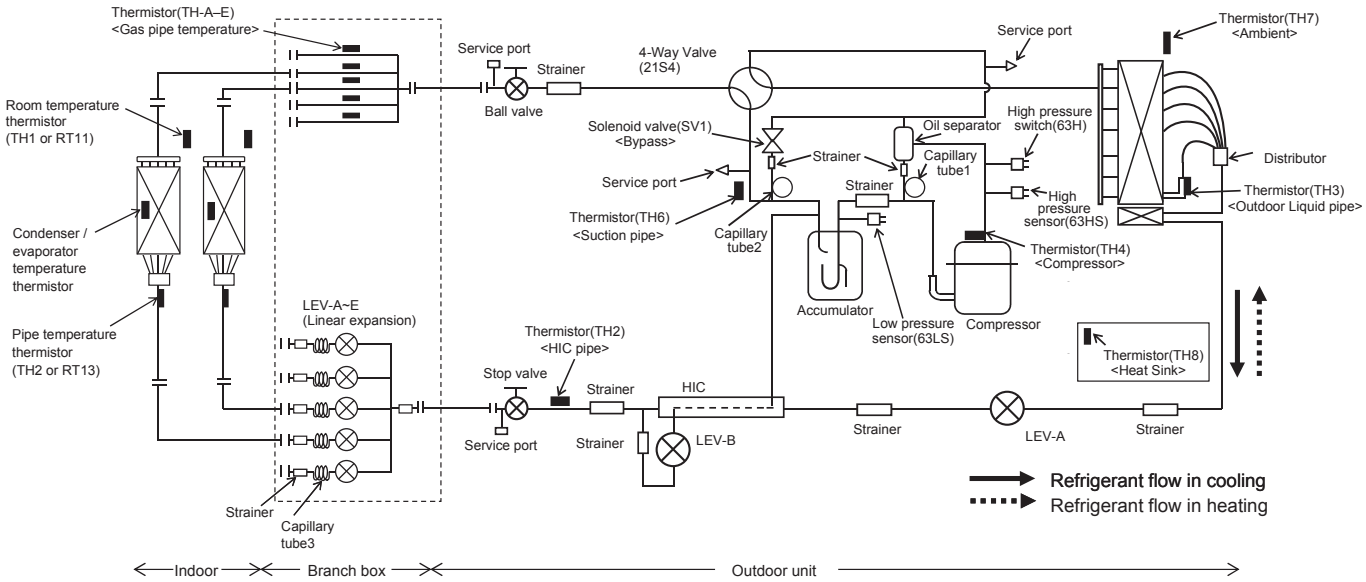

Unit: inch (mm)

		Capillary tube 1 (For return of oil from oil separator)	Capillary tube 2 (For solenoid valve (SV1))	Capillary tube 3 behind LEV (in cooling mode)
Outdoor unit	MXZ-8C60NA	ø0.098 x ø0.031 x L(39-1/2) (ø2.5 x ø0.8 x L800)	ø4.0 x ø3.0 x L500	
Branch box	PAC-MKA51BC	———	———	(ø0.157 x ø0.117 x L(5-1/8)) x 5 ((ø4 x ø3.0 x L130) x 5)
	PAC-MKA31BC	———	———	(ø0.157 x ø0.117 x L(5-1/8)) x 3 ((ø4 x ø3.0 x L130) x 3)

MXZ-4C36NAHZ MXZ-5C42NAHZ MXZ-8C48NAHZ

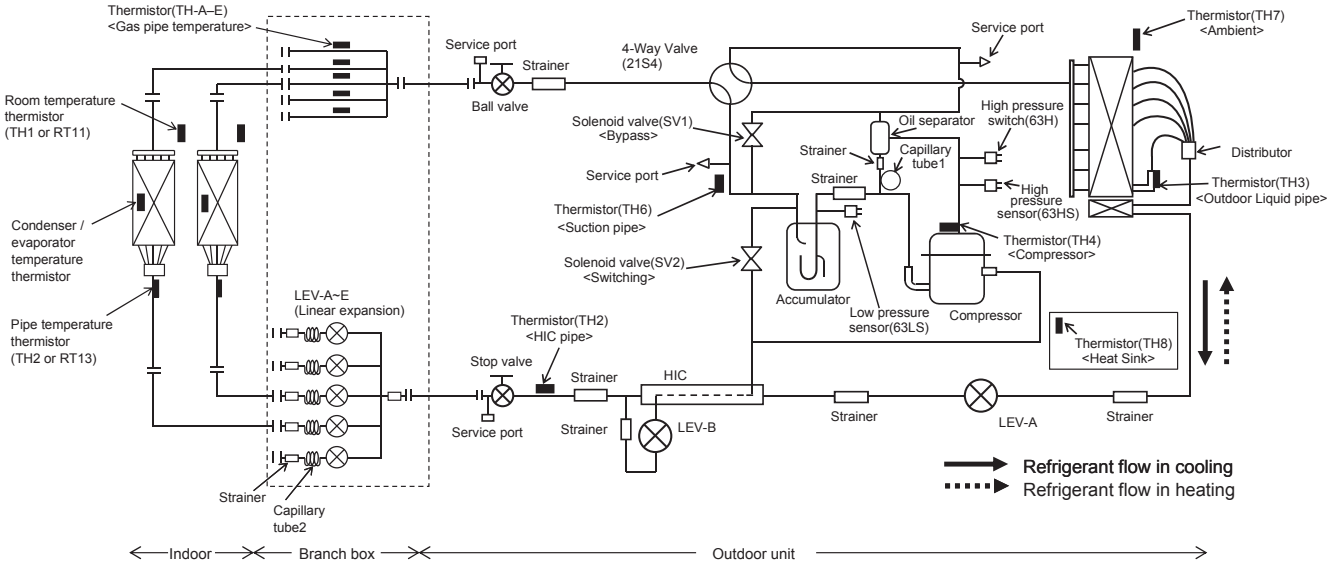

Unit: inch (mm)

		Capillary tube 1 (For return of oil from oil separator)	Capillary tube 2 behind LEV (in cooling mode)
Outdoor unit	MXZ-4C36NAHZ MXZ-5C42NAHZ MXZ-8C48NAHZ	ø0.098 x ø0.031 x L(39-1/2) (ø2.5 x ø0.8 x L1000)	
Branch box	PAC-MKA51BC	———	(ø0.157 x ø0.117 x L(5-1/8)) x 5 ((ø4 x ø3.0 x L130) x 5)
	PAC-MKA31BC	———	(ø0.157 x ø0.117 x L(5-1/8)) x 3 ((ø4 x ø3.0 x L130) x 3)

MXZ-8C48NA MXZ-8C60NA

Operating Range

		Indoor intake air temp.		Outoor intake air temp.
		M series	S, P series	
Cooling	Maximum	90 ºFDB, 73 ºFWB	95 ºFDB, 71 ºFWB	115 ºFDB
	Minimum	67 ºFDB, 57 ºFWB	67 ºFDB, 57 ºFWB	23 ºFDB
Heating	Maximum	80 ºFDB, 67 ºFWB	80 ºFDB, 67 ºFWB	70 ºFDB, 59 ºFWB
	Minimum	70 ºFDB, 60 ºFWB	70 ºFDB, 60 ºFWB	-4 ºFWB

MXZ-4C36NAHZ MXZ-5C42NAHZ MXZ-8C48NAHZ

Operating Range

		Indoor intake air temp.		Outoor intake air temp.
		M series	S, P series	
Cooling	Maximum	90 ºFDB, 73 ºFWB	95 ºFDB, 71 ºFWB	115 ºFDB
	Minimum	67 ºFDB, 57 ºFWB	67 ºFDB, 57 ºFWB	23 ºFDB
Heating	Maximum	80 ºFDB, 67 ºFWB	80 ºFDB, 67 ºFWB	70 ºFDB, 59 ºFWB
	Minimum	70 ºFDB, 60 ºFWB	70 ºFDB, 60 ºFWB	-13 ºFWB

Installing the refrigerant piping

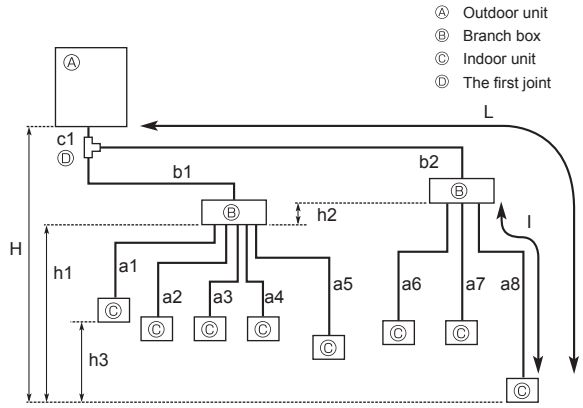

Fig.

Permissible length (one-way)	Total piping length	c1 + b1 + b2 + a1 + a2 + a3 + a4 + a5 + a6 + a7 + a8 ≤ 150 m (492 ft.)
	Farthest piping length (L)	c1 + b2 + a8 ≤ 80 m (262 ft.)
	Piping length between outdoor unit and branch boxes	c1 + b1 + b2 ≤ 55 m (180 ft.)
	Farthest branch box from the first joint (b2)	b2 ≤ 30 m (98 ft.)
	Farthest piping length after branch box (l)	a8 ≤ 25 m (82 ft.)
	Total piping length between branch boxes and indoor units	a1 + a2 + a3 + a4 + a5 + a6 + a7 + a8 ≤ 95 m (311 ft.)
Permissible height difference (one-way)	In indoor/outdoor section (H) *1	H ≤ 50 m (164 ft.) (In case of outdoor unit is set higher than indoor unit)
		H ≤ 40 m (131 ft.) (In case of outdoor unit is set lower than indoor unit)
	In branch box/indoor unit section (h1)	h1 + h2 ≤ 15 m (49 ft.)
	In each branch unit (h2)	h2 ≤ 15 m (49 ft.)
	In each indoor unit (h3)	h3 ≤ 12 m (39 ft.)
Number of bends		| c1 + b1 + a1 |, | c1 + b1 + a2 |, | c1 + b1 + a3 |, | c1 + b1 + a4 |, | c1 + b1 + a5 |, | c1 + b2 + a6 |, | c1 + b2 + a7 |, | c1 + b2 + a8 | ≤ 15

*1 Branch box should be placed within the level between the outdoor unit and indoor units.

Pipe length and height difference

Flared connections

- This unit has flared connections on each indoor unit and branch box and outdoor unit sides.
- Remove the valve cover of the outdoor unit, then connect the pipe.
- Refrigerant pipes are used to connect the branch box and outdoor unit.

Piping connection size

	A	B
Liquid	ϕ3/8 inch [9.52 mm]	The piping connection size differs according to the type and capacity of indoor units. Match the piping connection size of branch box with indoor unit. If the piping connection size of branch box does not match the piping connection size of indoor unit, use optional different-diameter (deformed) joints to the branch box side. (Connect deformed joint directly to the branch box side.)
Gas	ϕ5/8 inch [15.88 mm] / ϕ3/4 inch* [19.05 mm]	

* MXZ-8C60NA only

■ **Pipe size (Branch box-Indoor unit) *Case of M series or S series Indoor unit**

Indoor unit type	(BTU/h)	06	09	12	15	18	24
Pipe size (ømm) (inch)	Liquid	ø6.35 (1/4)	ø6.35 (1/4)	ø6.35 (1/4)	ø6.35 (1/4)	ø6.35 (1/4)	ø9.52 (3/8)
	Gas	ø9.52 (3/8)	ø9.52 (3/8)	ø9.52 (3/8)	ø12.7 (1/2)	ø12.7 (1/2)	ø15.88 (5/8)

■ **Pipe size (Branch box-Indoor unit) *Case of P series indoor unit**

Indoor unit type	(BTU/h)	12	18	24	30	36
Pipe size (ømm) (inch)	Liquid	ø6.35 (1/4)	ø6.35 (1/4)	ø9.52 (3/8)	ø9.52 (3/8)	ø9.52 (3/8)
	Gas	ø12.7 (1/2)	ø12.7 (1/2)	ø15.88 (5/8)	ø15.88 (5/8)	ø15.88 (5/8)

Flare connection employed. (No brazing!)

■ In case of using 1-branch box
Flare connection employed (No brazing)

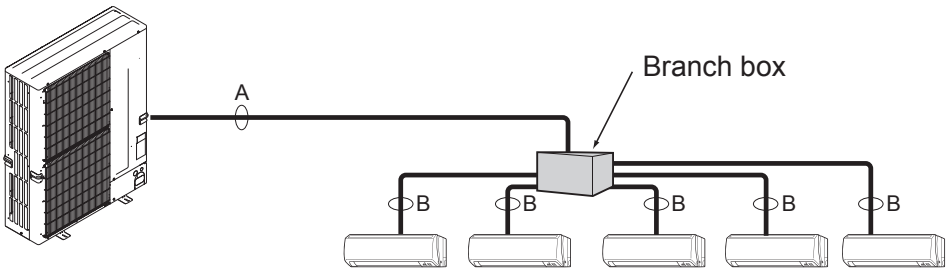

■ In case of using 2-branch boxes

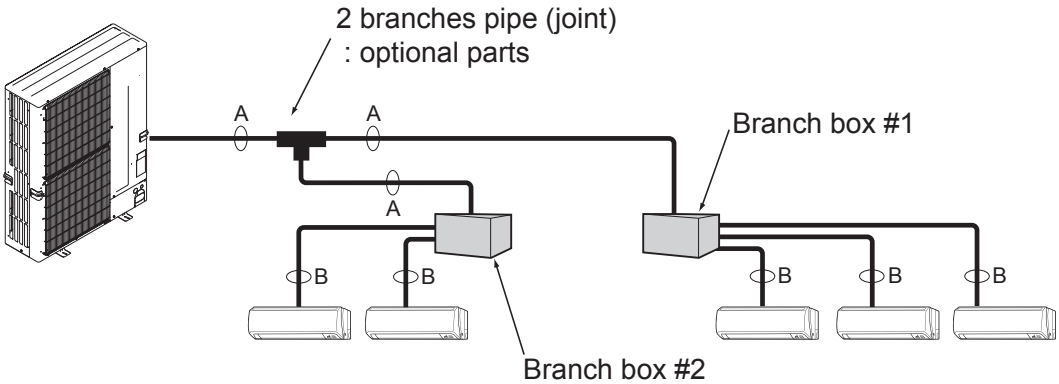

■ Installation procedure (2 branches pipe (joint))
Refer to the installation manuals of MSDD-50AR-E and MSDD-50BR-E.

8 NOISE CRITERION CURVES

8-1. OUTDOOR UNIT

MXZ-8C48NA
MXZ-8C48NAHZ

MODE	SPL(dB)	LINE
COOLING	51	○——○
HEATING	54	●——●

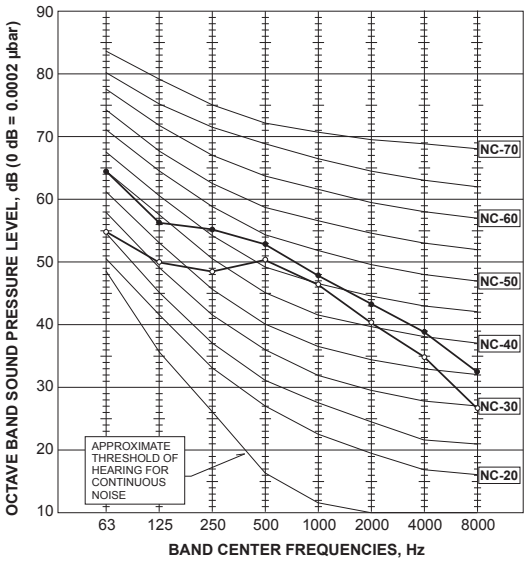

MXZ-8C60NA

MODE	SPL(dB)	LINE
COOLING	58	○——○
HEATING	59	●——●

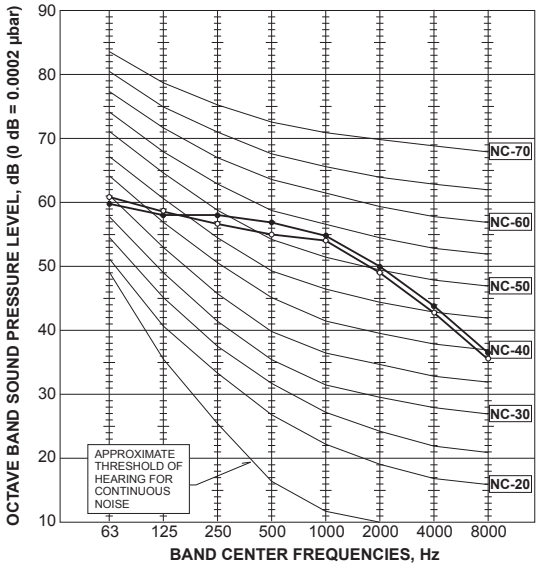

MXZ-4C36NAHZ

MODE	SPL(dB)	LINE
COOLING	49	○——○
HEATING	53	●——●

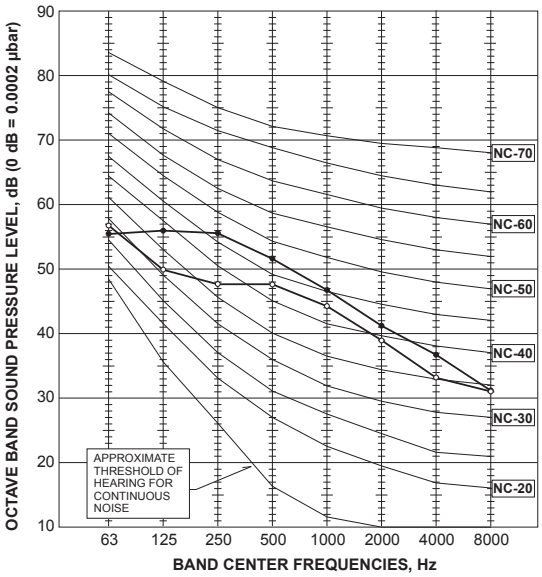

MXZ-5C42NAHZ

MODE	SPL(dB)	LINE
COOLING	50	○——○
HEATING	54	●——●

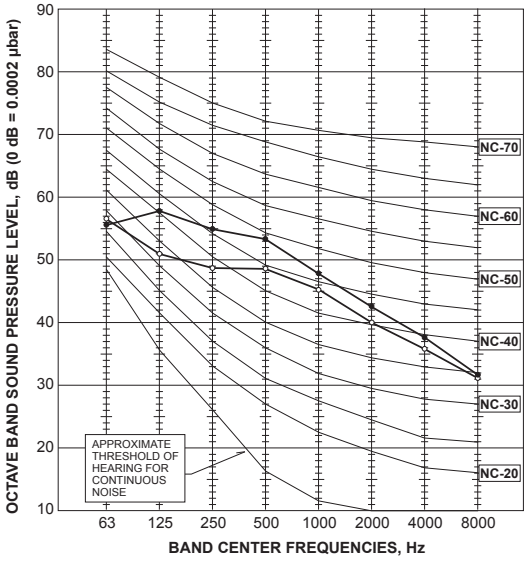

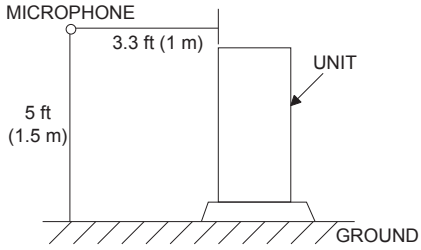

9 STANDARD CAPACITY DIAGRAM

9-1. MXZ-8C48NA MXZ-8C48NAHZ <cooling>

		MXZ
		8C48NAHZ
Nominal cooling capacity	BTU/h	48,000
Input	kW	4.00
Current (208V)	A	19.5
Current (230V)	A	17.6

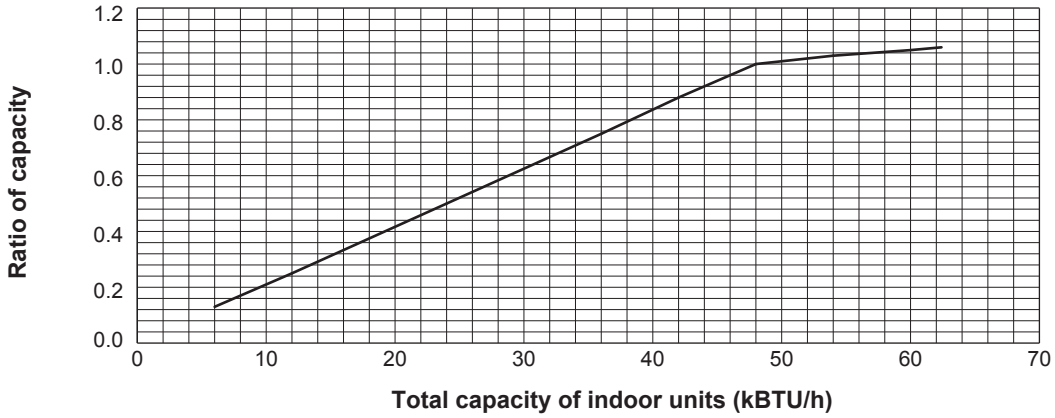

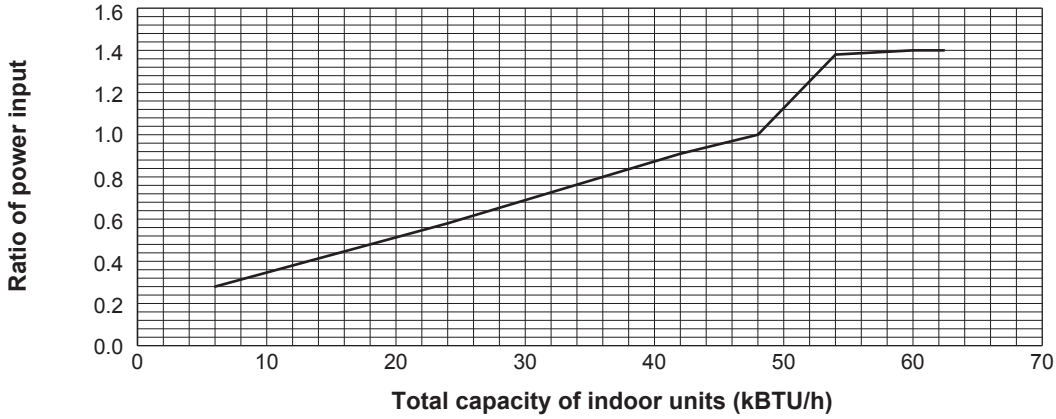

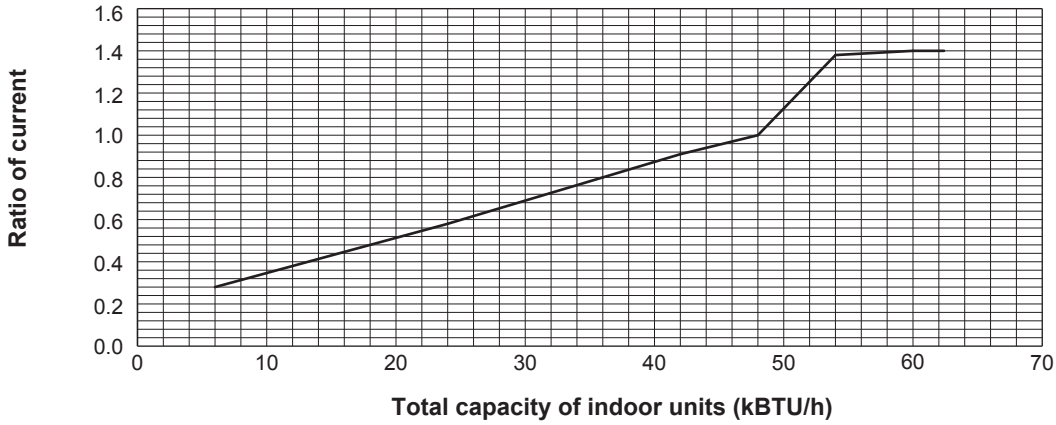

208, 230 V

9-2. MXZ-8C48NA MXZ-8C48NAHZ <heating>

		MXZ
		8C48NA(HZ)
Nominal cooling capacity	BTU/h	54,000
Input	kW	4.22
Current (208V)	A	20.5
Current (230V)	A	18.6

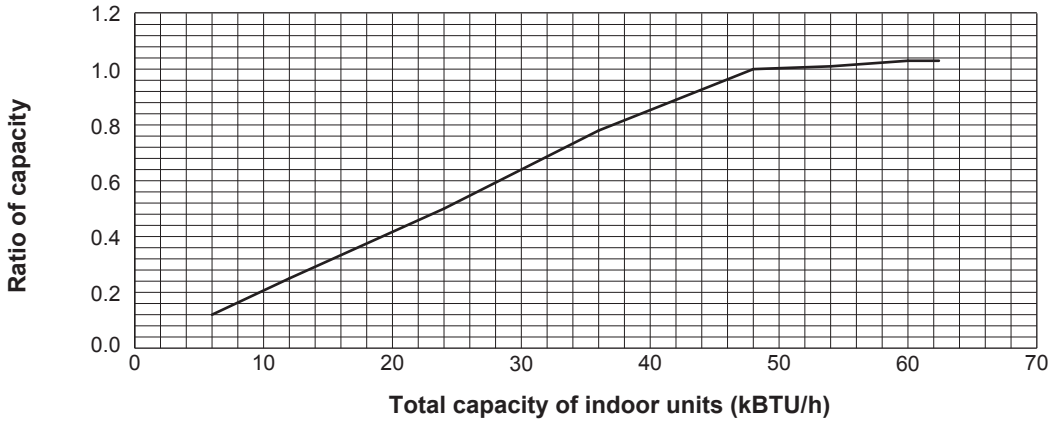

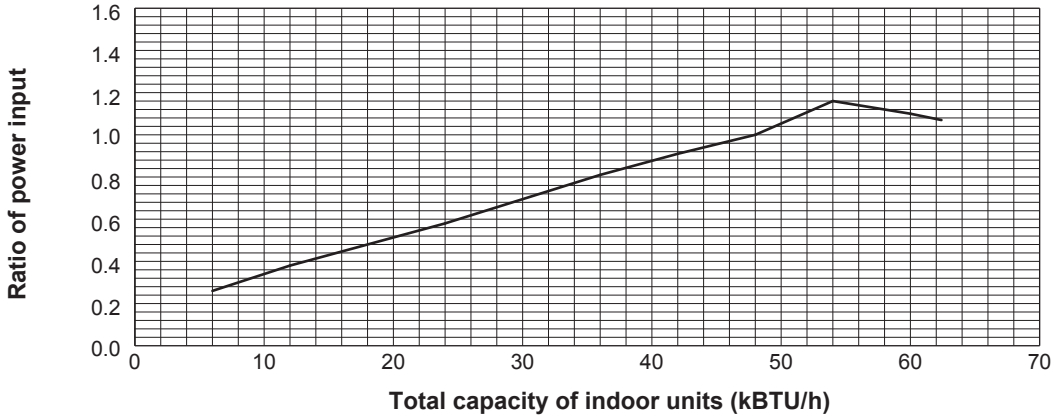

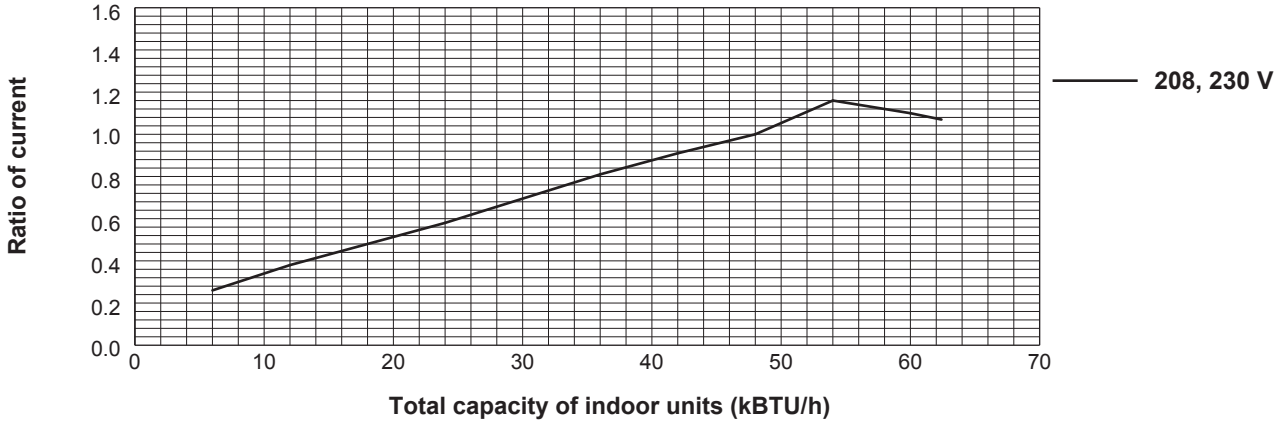

9-3. MXZ-8C60NA <cooling>

		MXZ
		8C60NA
Nominal cooling capacity	BTU/h	60,000
Input	kW	4.80
Current (208V)	A	24.1
Current (230V)	A	21.8

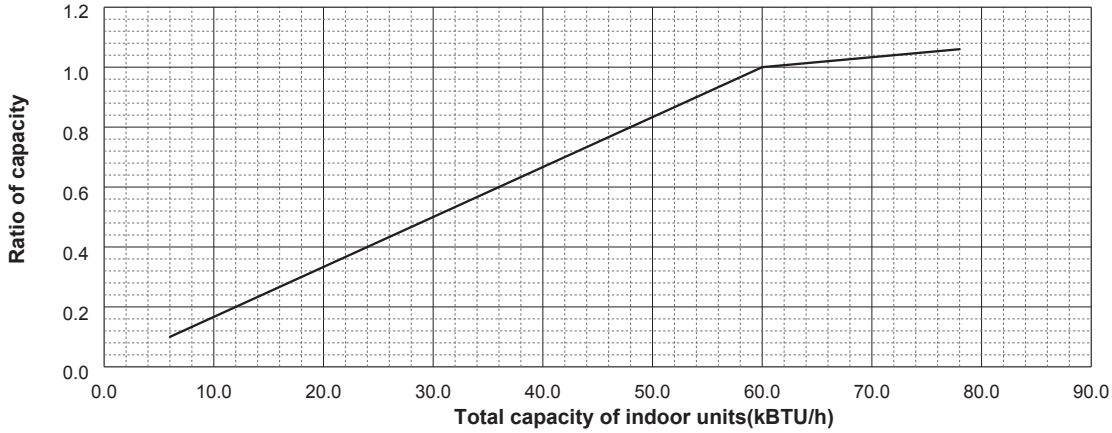

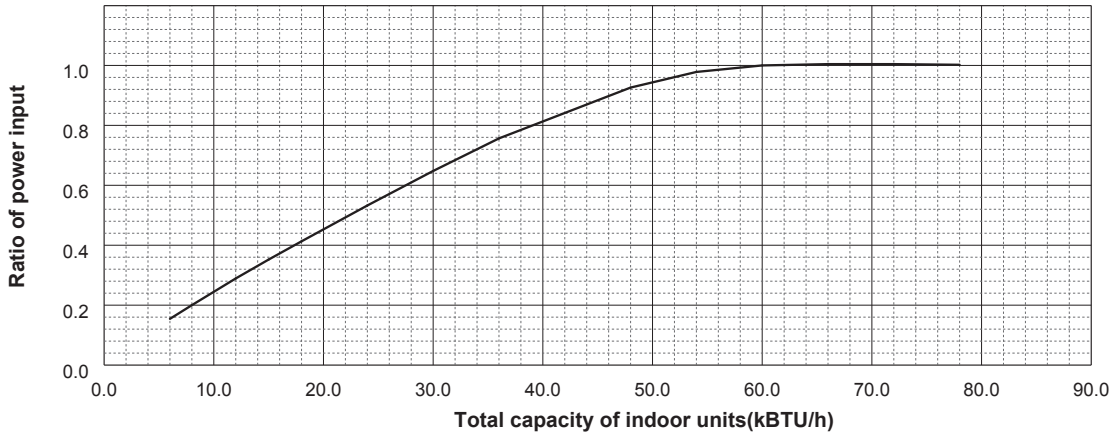

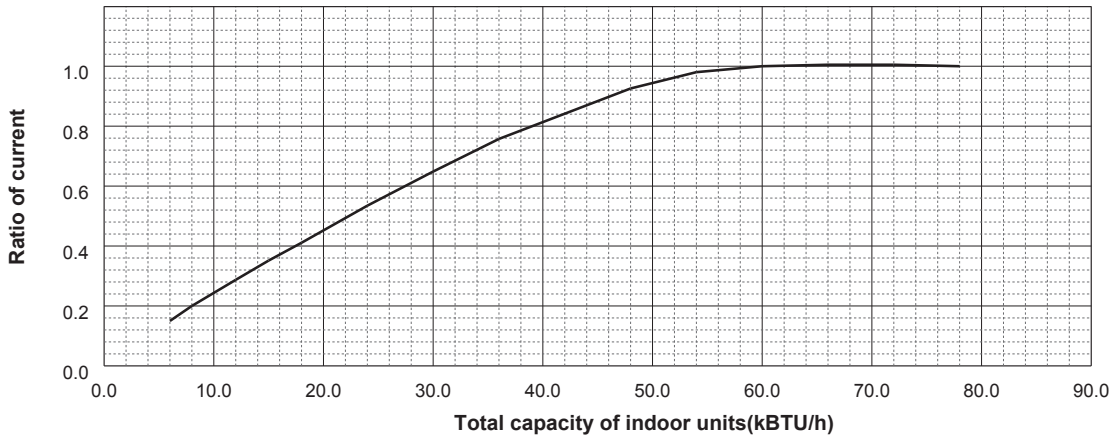

——— 208, 230 V

9-4. MXZ-8C60NA <heating>

		MXZ
		8C60NA
Nominal cooling capacity	BTU/h	66,000
Input	kW	5.67
Current (208V)	A	28.5
Current (230V)	A	25.7

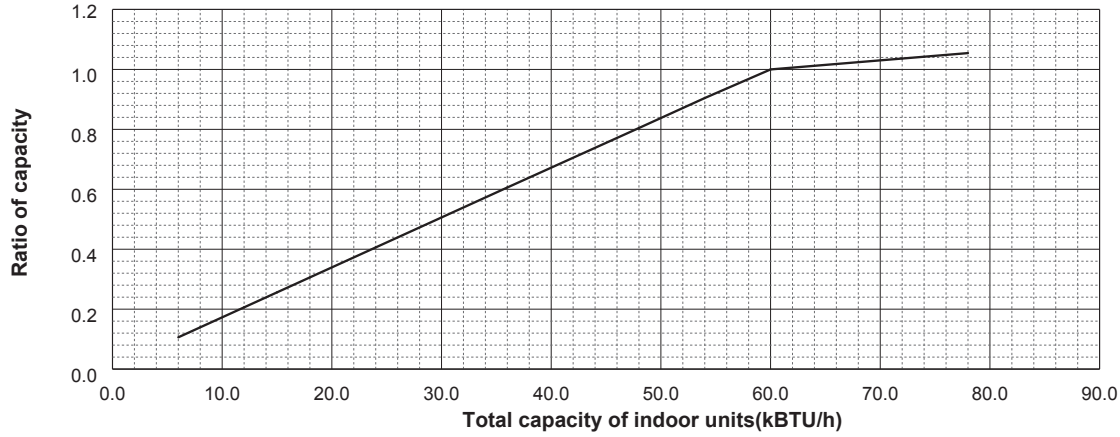

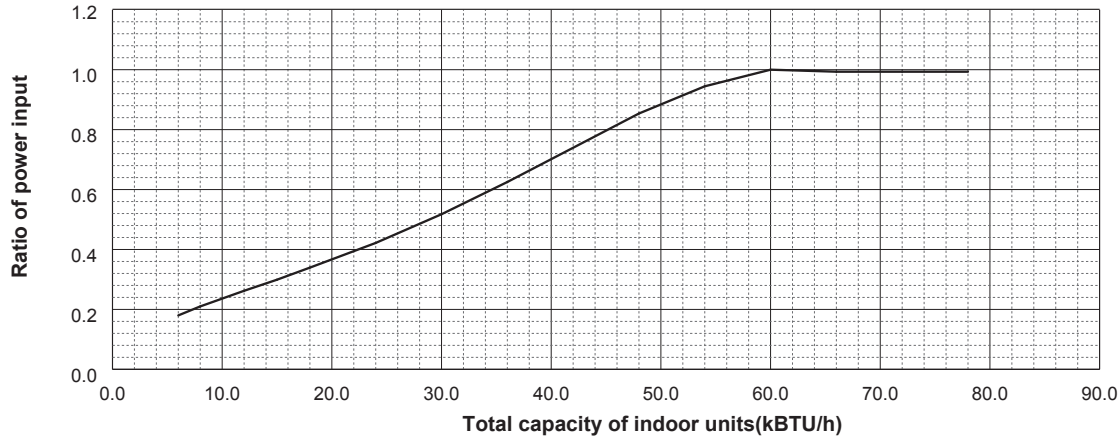

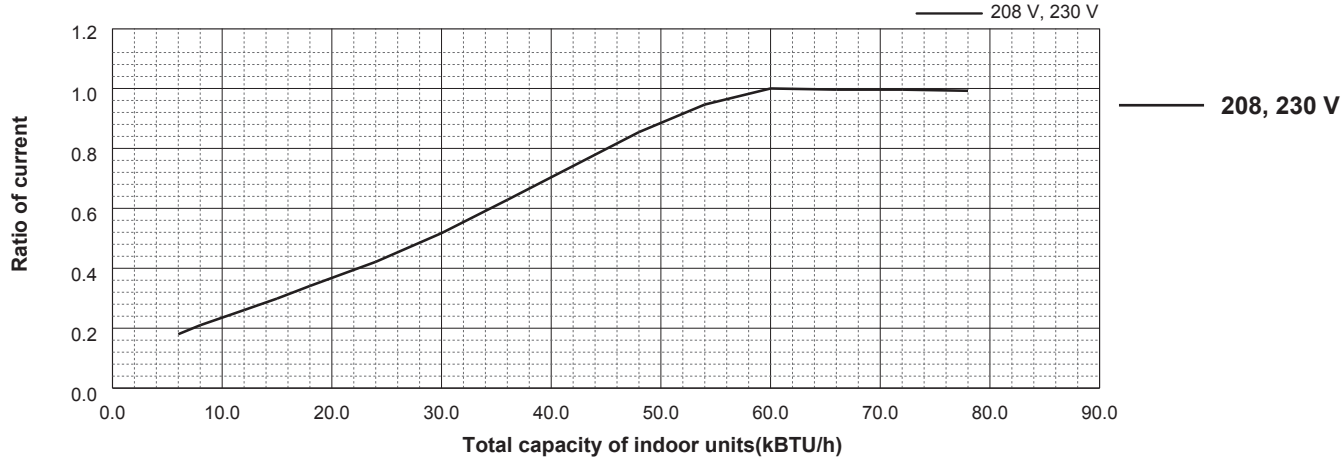

9-5. MXZ-4C36NAHZ <cooling>

		MXZ
		4C36NAHZ
Nominal cooling capacity	BTU/h	36,000
Input	kW	2.57
Current (208V)	A	12.8
Current (230V)	A	11.6

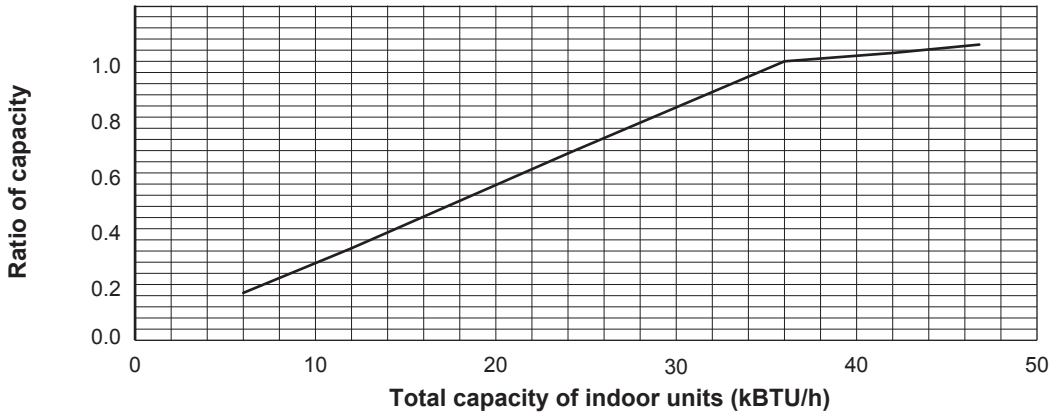

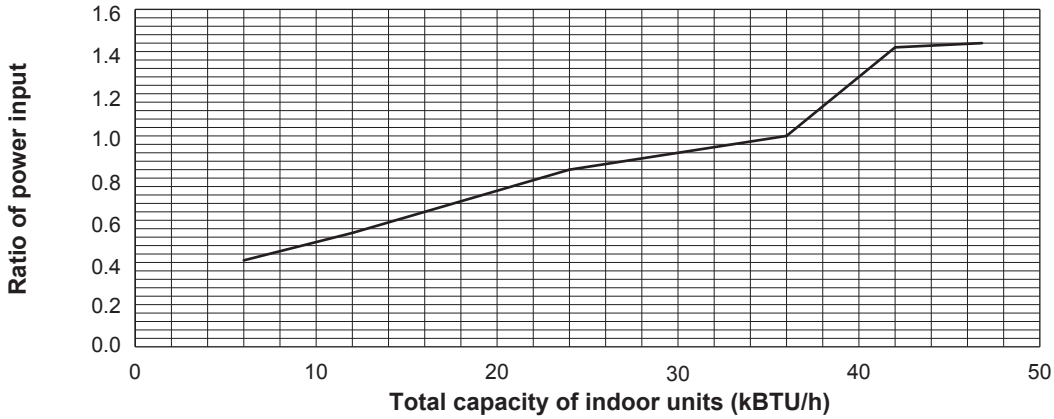

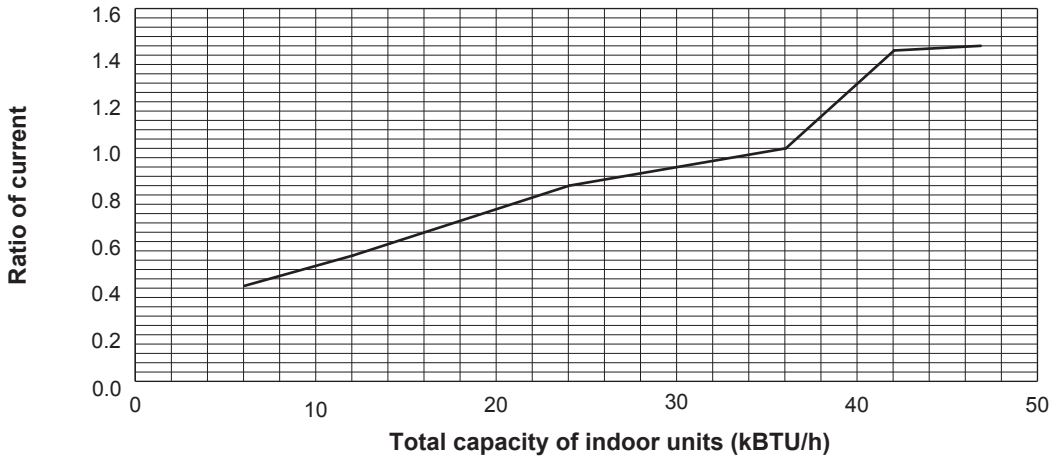

——— 208, 230 V

9-6. MXZ-4C36NAHZ <heating>

		MXZ
		4C36NAHZ
Nominal cooling capacity	BTU/h	45,000
Input	kW	3.34
Current (208V)	A	16.4
Current (230V)	A	14.8

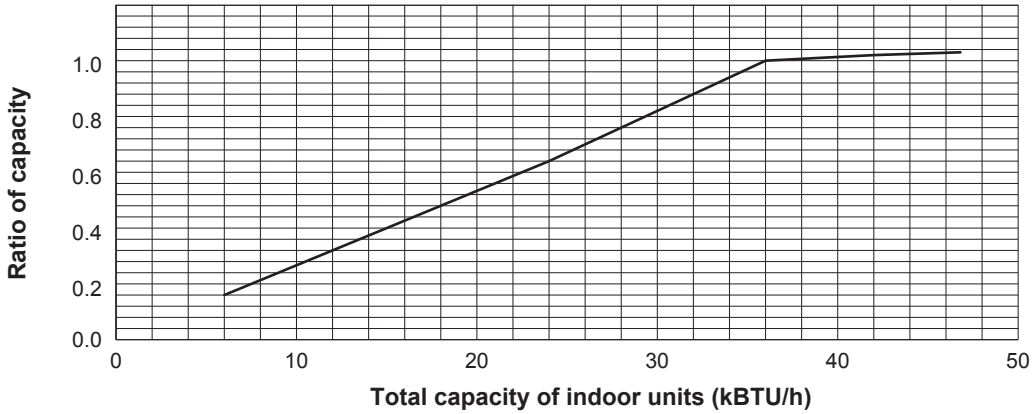

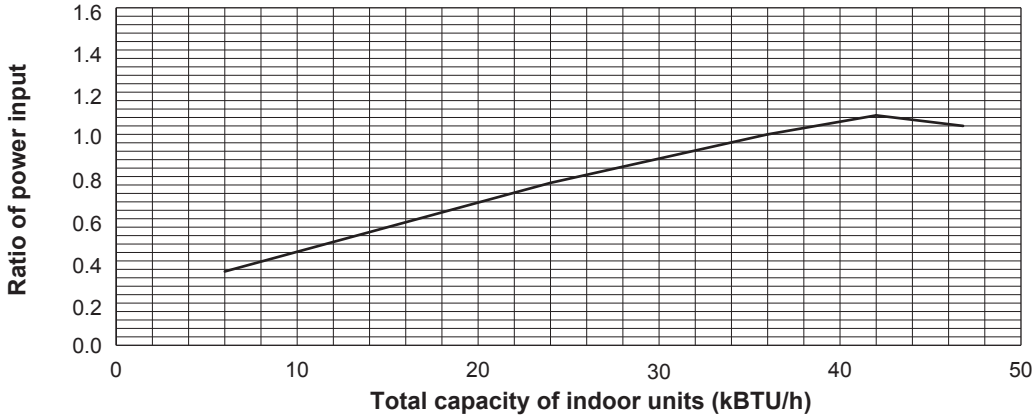

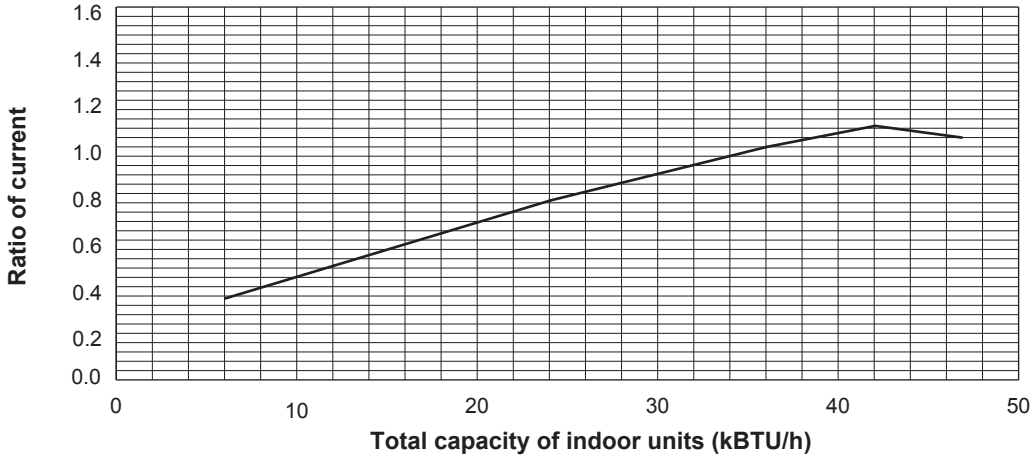

208, 230 V

9-7. MXZ-5C42NAHZ <cooling>

		MXZ
		5C42NAHZ
Nominal cooling capacity	BTU/h	42,000
Input	kW	3.13
Current (208V)	A	15.4
Current (230V)	A	14.0

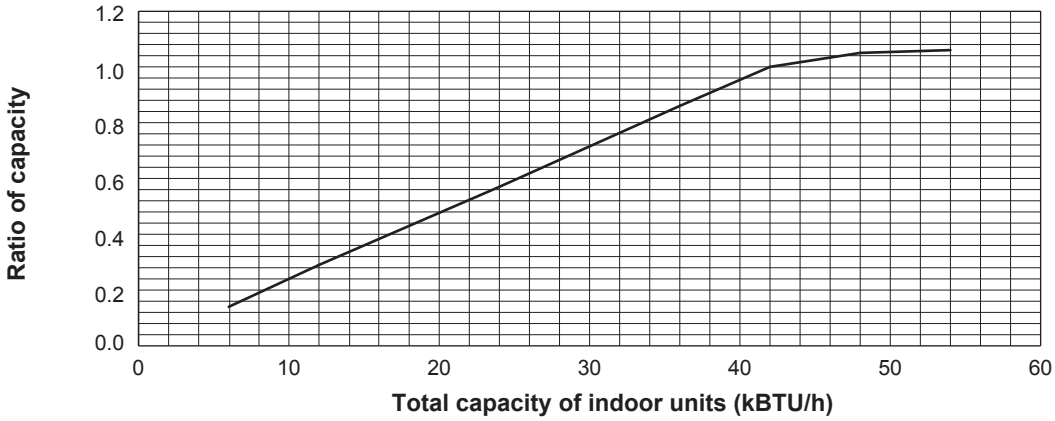

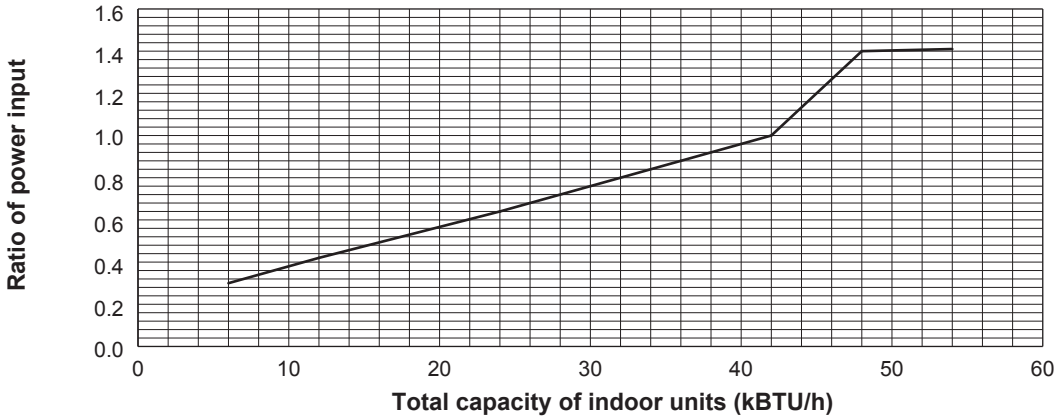

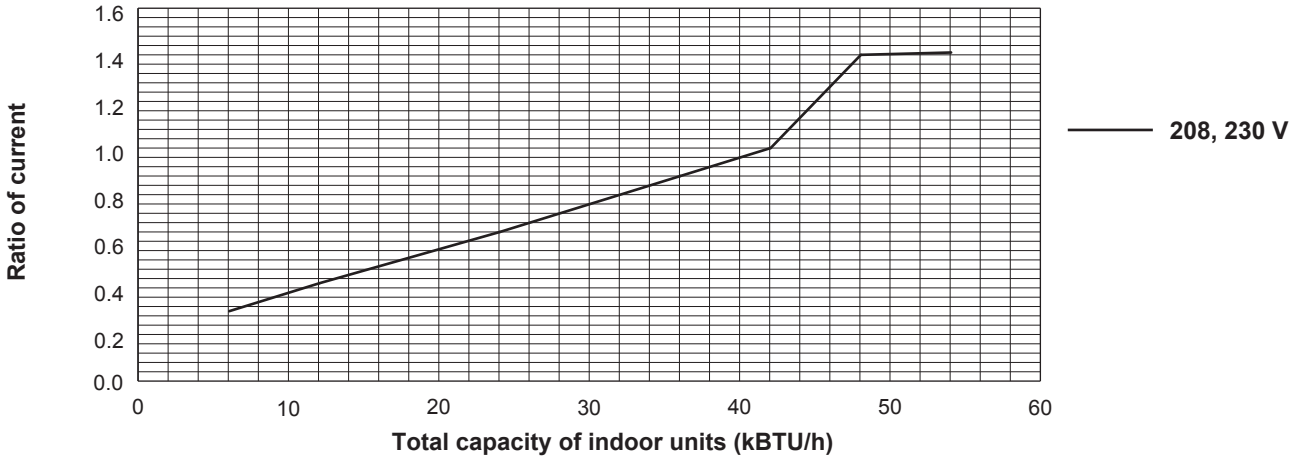

9-8. MXZ-5C42NAHZ <heating>

		MXZ
		5C42NAHZ
Nominal cooling capacity	BTU/h	48,000
Input	kW	3.43
Current (208V)	A	16.8
Current (230V)	A	15.2

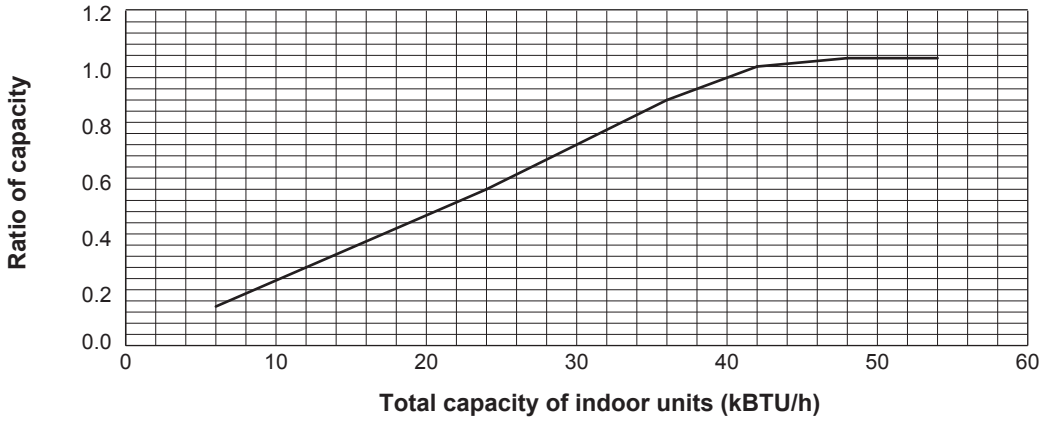

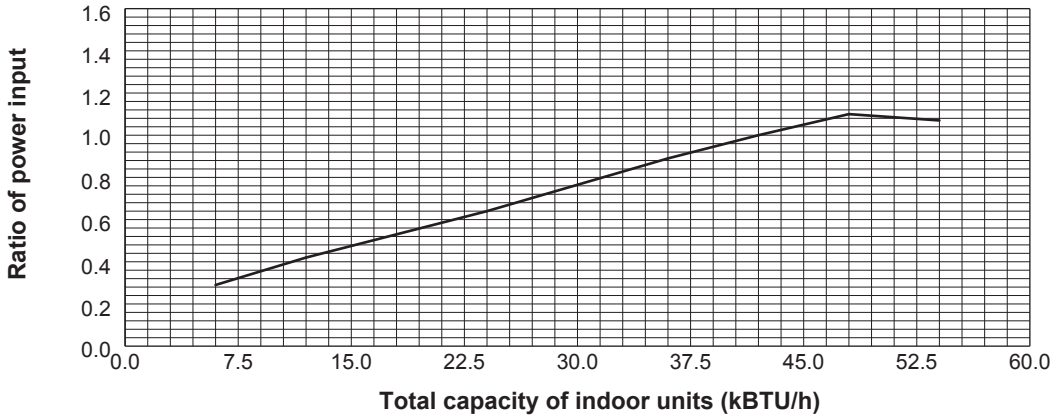

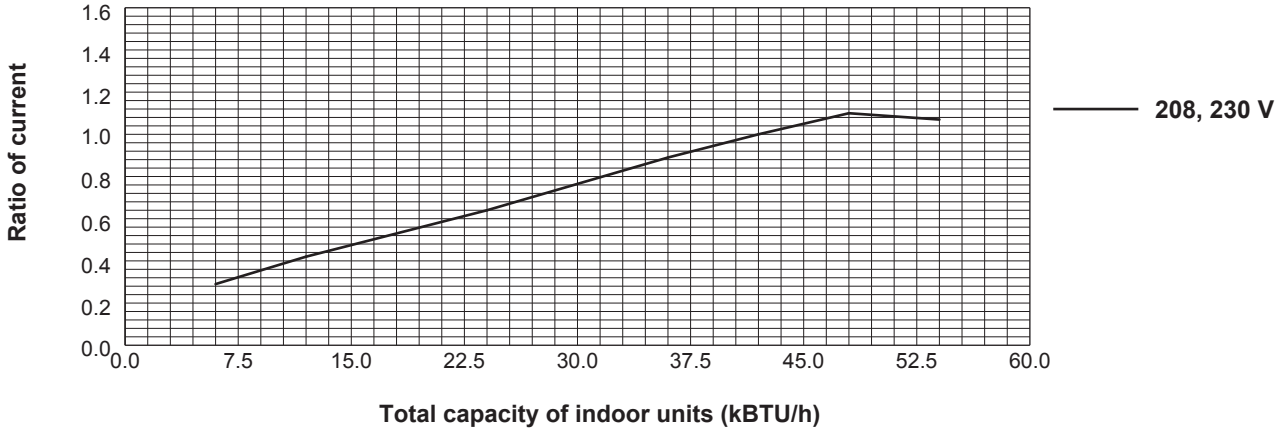

B. MUTLI-USE

MSZ-EF09NAW **MSZ-EF12NAW** **MSZ-EF15NAW** **MSZ-EF18NAW**
MSZ-EF09NAB **MSZ-EF12NAB** **MSZ-EF15NAB** **MSZ-EF18NAB**
MSZ-EF09NAS **MSZ-EF12NAS** **MSZ-EF15NAS** **MSZ-EF18NAS**

1 REFERENCE SERVICE MANUAL

For information on service, please refer to the service manual as follows.

1-1. INDOOR UNIT

Model name	Service Ref.	Service Manual No.
MSZ-EF09NAW	MSZ-EF09NAW - U1	OBH736 OBB736B
MSZ-EF12NAW	MSZ-EF12NAW - U1	
MSZ-EF15NAW	MSZ-EF15NAW - U1	
MSZ-EF18NAW	MSZ-EF18NAW - U1	
MSZ-EF09NAB	MSZ-EF09NAB - U1	
MSZ-EF12NAB	MSZ-EF12NAB - U1	
MSZ-EF15NAB	MSZ-EF15NAB - U1	
MSZ-EF18NAB	MSZ-EF18NAB - U1	
MSZ-EF09NAS	MSZ-EF09NAS - U1	
MSZ-EF12NAS	MSZ-EF12NAS - U1	
MSZ-EF15NAS	MSZ-EF15NAS - U1	
MSZ-EF18NAS	MSZ-EF18NAS - U1	

2 SPECIFICATIONS

2-1. INDOOR UNIT

MSZ-EF09NAW MSZ-EF12NAW MSZ-EF15NAW MSZ-EF18NAW
MSZ-EF09NAB MSZ-EF12NAB MSZ-EF15NAB MSZ-EF18NAB
MSZ-EF09NAS MSZ-EF12NAS MSZ-EF15NAS MSZ-EF18NAS

Indoor unit model			MSZ-EF09NAW MSZ-EF09NAB MSZ-EF09NAS	MSZ-EF12NAW MSZ-EF12NAB MSZ-EF12NAS	MSZ-EF15NAW MSZ-EF15NAB MSZ-EF15NAS	MSZ-EF18NAW MSZ-EF18NAB MSZ-EF18NAS
Power supply	V, phase, Hz		208/230 , 1 , 60			
Disconnect switch		A	15			
Min. circuit ampacity		A	1.0			
Fan motor		F.L.A	0.67			
Airflow Super high - High - Med. - Low - Quiet	COOL Dry (Wet)	CFM	371 - 293 - 222 - 162 - 141 (319 - 252 - 191 - 140 - 121)	371 - 293 - 222 - 162 - 141 (319 - 252 - 191 - 140 - 121)	364 - 314 - 272 - 233 - 205 (313 - 270 - 234 - 200 - 176)	388 - 328 - 279 - 240 - 205 (334 - 282 - 240 - 206 - 176)
	HEAT Dry	CFM	420 - 314 - 219 - 162 - 141	448 - 314 - 219 - 162 - 141	448 - 350 - 275 - 222 - 194	466 - 392 - 318 - 258 - 226
Moisture removal		pt./h	0.6	2.1	3.6	4.4
Sound level Super high - High - Med. - Low - Quiet	Cooling	dB(A)	42 - 36 - 29 - 23 - 21	42 - 36 - 29 - 24 - 21	42 - 39 - 35 - 31 - 28	43 - 40 - 36 - 33 - 30
	Heating	dB(A)	45 - 37 - 29 - 24 - 21	46 - 38 - 30 - 24 - 21	48 - 41 - 35 - 30 - 28	49 - 43 - 37 - 33 - 30
Cond. drain connection O.D.		in.	5/8			
Dimensions	W	in.	34-13/16			
	D		7-11/16			
	H		11-3/4			
Weight		lb.	26			
External finish			W: Munsell 1.0Y 9.2/0.2 B: Munsell 3.7PB 2.0/0.1 S: Munsell 3.1PB 8.2/0.2			
Remote controller			Wireless type			
Control voltage (by built-in transformer)			12 - 24 VDC			

NOTE: Test conditions are based on AHRI 210/240.

OPERATING RANGE

(1) POWER SUPPLY

	Rated voltage	Guaranteed voltage (V)
Indoor unit	208/230 V 1 phase 60 Hz	Min. 187 — 208 — 230 — Max. 253

(2) OPERATION

Mode	Condition	Intake air temperature (°F)			
		Indoor		Outdoor	
		DB	WB	DB	WB
Cooling	Standard temperature	80	67	95	—
	Maximum temperature	90	73	115	—
	Minimum temperature	67	57	14	—
	Maximum humidity	78%		—	
Heating	Standard temperature	70	60	47	43
	Maximum temperature	80	67	75	65
	Minimum temperature	70	60	-13	-14

OUTLET AIR SPEED AND COVERAGE

Model	Mode	Function	Airflow (CFM)	Air speed (ft./s)	Coverage (ft.)
MSZ-EF09NAW MSZ-EF09NAB MSZ-EF09NAS	HEAT	Dry	420	19.5	29.2
	COOL	Dry	371	17.2	25.8
		Wet	319	14.8	22.3
MSZ-EF12NAW MSZ-EF12NAB MSZ-EF12NAS	HEAT	Dry	448	20.8	31.1
	COOL	Dry	371	17.2	25.8
		Wet	319	14.8	22.3
MSZ-EF15NAW MSZ-EF15NAB MSZ-EF15NAS	HEAT	Dry	448	20.8	31.1
	COOL	Dry	364	16.8	25.4
		Wet	313	14.5	21.9
MSZ-EF18NAW MSZ-EF18NAB MSZ-EF18NAS	HEAT	Dry	466	21.6	32.3
	COOL	Dry	388	18.0	27.0
		Wet	334	15.5	23.4

- The air coverage is the figure up to the position where the air speed is 1 ft./s, when air is blown out horizontally from the unit properly at the High speed position.
  The coverage should be used only as a general guideline since it varies according to the size of the room and furniture arranged inside the room.

3 OUTLINES AND DIMENSIONS

3-1. INDOOR UNIT

Unit: inch

MSZ-EF09NAW	**MSZ-EF12NAW**	**MSZ-EF15NAW**	**MSZ-EF18NAW**
MSZ-EF09NAB	**MSZ-EF12NAB**	**MSZ-EF15NAB**	**MSZ-EF18NAB**
MSZ-EF09NAS	**MSZ-EF12NAS**	**MSZ-EF15NAS**	**MSZ-EF18NAS**

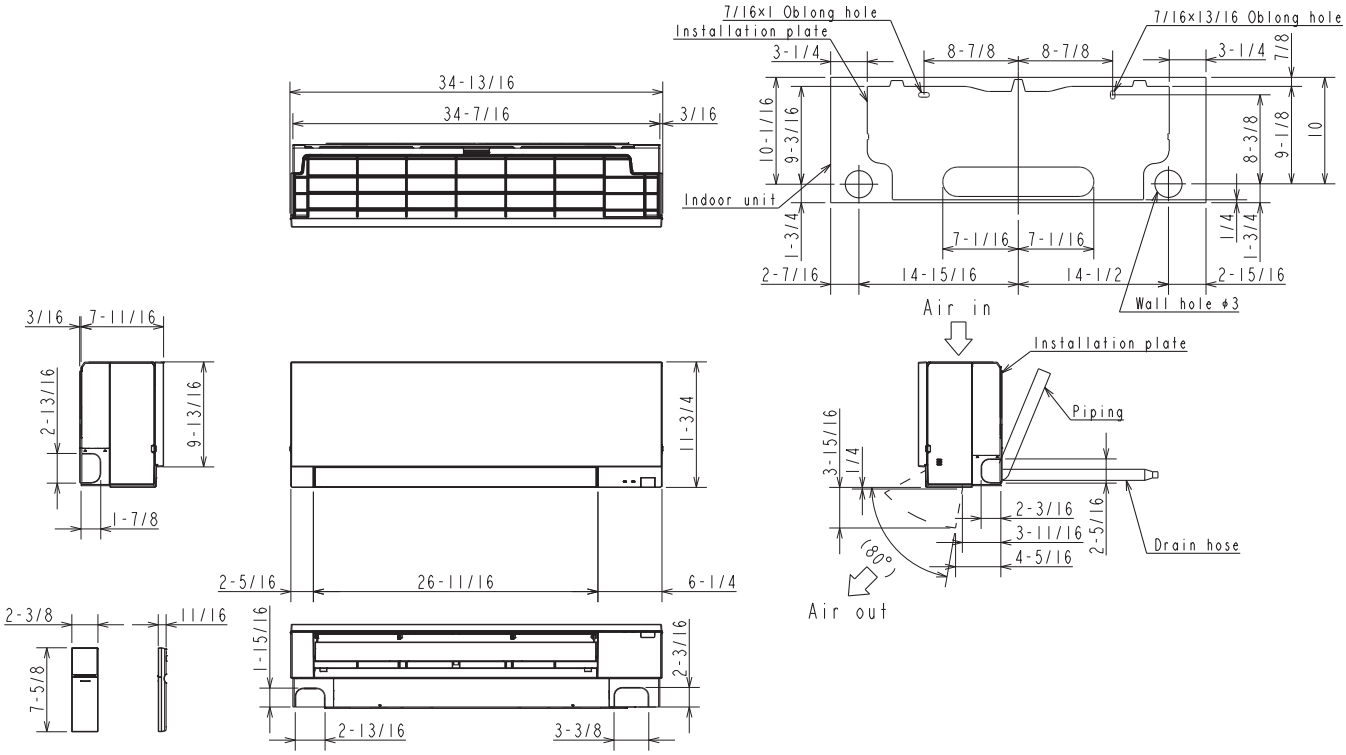

MSZ-EF09/12NA

Piping	Insulation	ϕ1-7/16 O.D
	Liquid line	ϕ1/4 - 19-11/16 (Flared connection ϕ1/4)
	Gas line	ϕ3/8 - 16-15/16 (Flared connection ϕ3/8)
Drain hose		Instlation ϕ1-1/8 Connected part ϕ5/8 O.D active length 15-3/8

Note: Extension pipe size refer to the specifications table.

MSZ-EF15/18NA

Piping	Insulation	ϕ1-7/16 O.D
	Liquid line	ϕ1/4 - 19-11/16 (Flared connection ϕ1/4)
	Gas line	ϕ3/8 - 16-15/16 (Flared connection ϕ1/2)
Drain hose		Instlation ϕ1-1/8 Connected part ϕ5/8 O.D active length 15-3/8

Note: Extension pipe size refer to the specifications table.

4 POSITION OF THE CENTER OF GRAVITY

4-1. INDOOR UNIT

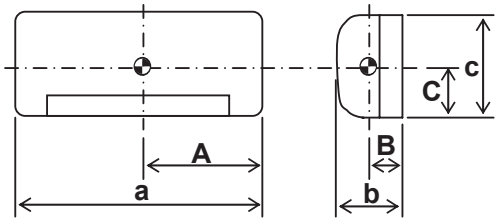

Unit: inch (mm)

Model name	A	B	C	a	b	c
MSZ-EF09NAW MSZ-EF12NAW MSZ-EF15NAW MSZ-EF18NAW MSZ-EF09NAB MSZ-EF12NAB MSZ-EF15NAB MSZ-EF18NAB MSZ-EF09NAS MSZ-EF12NAS MSZ-EF15NAS MSZ-EF18NAS	14-1/2 (369)	3-15/16 (100)	5-5/8 (143)	34-13/16 (885)	7-11/16 (195)	11-3/4 (299)

5 WIRING DIAGRAM

5-1. INDOOR UNIT

MSZ-EF09NAW	**MSZ-EF12NAW**	**MSZ-EF15NAW**	**MSZ-EF18NAW**
MSZ-EF09NAB	**MSZ-EF12NAB**	**MSZ-EF15NAB**	**MSZ-EF18NAB**
MSZ-EF09NAS	**MSZ-EF12NAS**	**MSZ-EF15NAS**	**MSZ-EF18NAS**

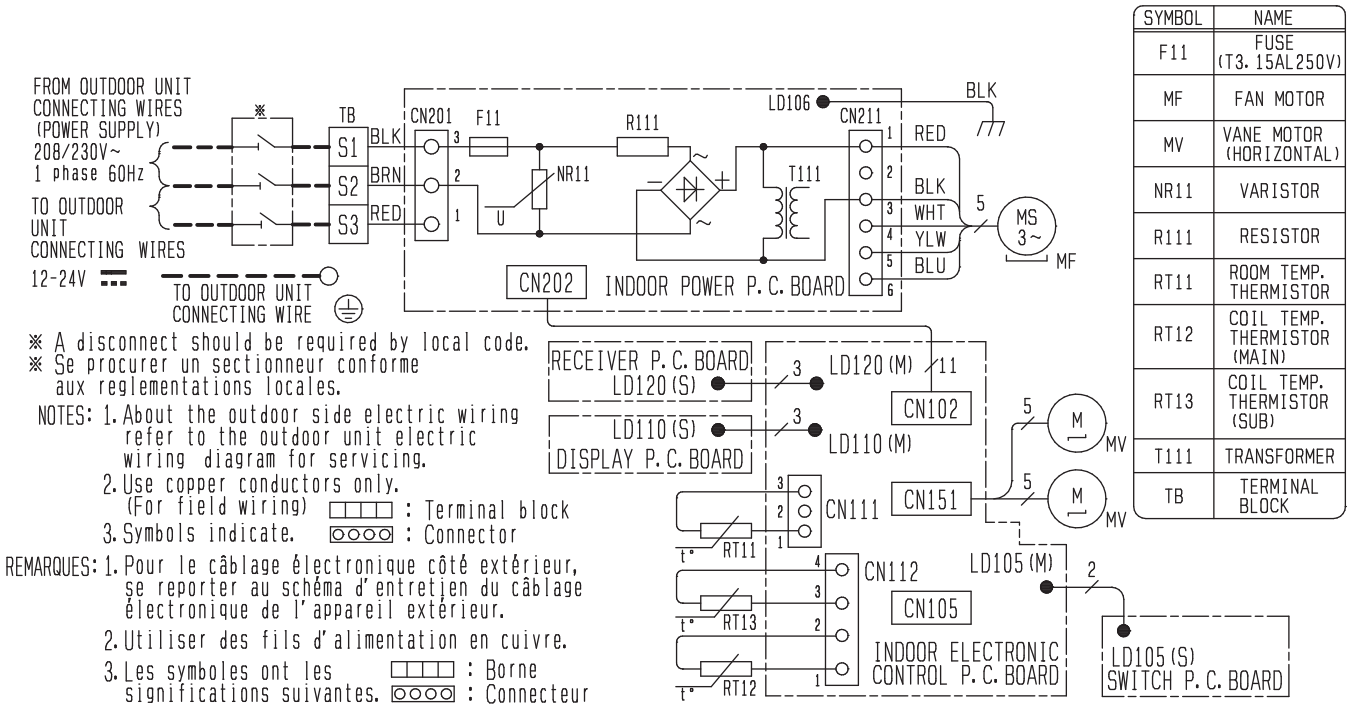

SYMBOL	NAME
F11	FUSE (T3. 15AL250V)
MF	FAN MOTOR
MV	VANE MOTOR (HORIZONTAL)
NR11	VARISTOR
R111	RESISTOR
RT11	ROOM TEMP. THERMISTOR
RT12	COIL TEMP. THERMISTOR (MAIN)
RT13	COIL TEMP. THERMISTOR (SUB)
T111	TRANSFORMER
TB	TERMINAL BLOCK

※ A disconnect should be required by local code.
※ Se procurer un sectionneur conforme aux reglementations locales.

NOTES: 1. About the outdoor side electric wiring refer to the outdoor unit electric wiring diagram for servicing.
2. Use copper conductors only. (For field wiring) : Terminal block
3. Symbols indicate. : Connector

REMARQUES: 1. Pour le câblage électronique côté extérieur, se reporter au schéma d'entretien du câblage électronique de l'appareil extérieur.
2. Utiliser des fils d'alimentation en cuivre.
3. Les symboles ont les significations suivantes. : Borne : Connecteur

6 REFRIGERANT SYSTEM DIAGRAM

6-1. INDOOR UNIT

Unit: inch

MSZ-EF09NAW	**MSZ-EF12NAW**	**MSZ-EF15NAW**	**MSZ-EF18NAW**
MSZ-EF09NAB	**MSZ-EF12NAB**	**MSZ-EF15NAB**	**MSZ-EF18NAB**
MSZ-EF09NAS	**MSZ-EF12NAS**	**MSZ-EF15NAS**	**MSZ-EF18NAS**

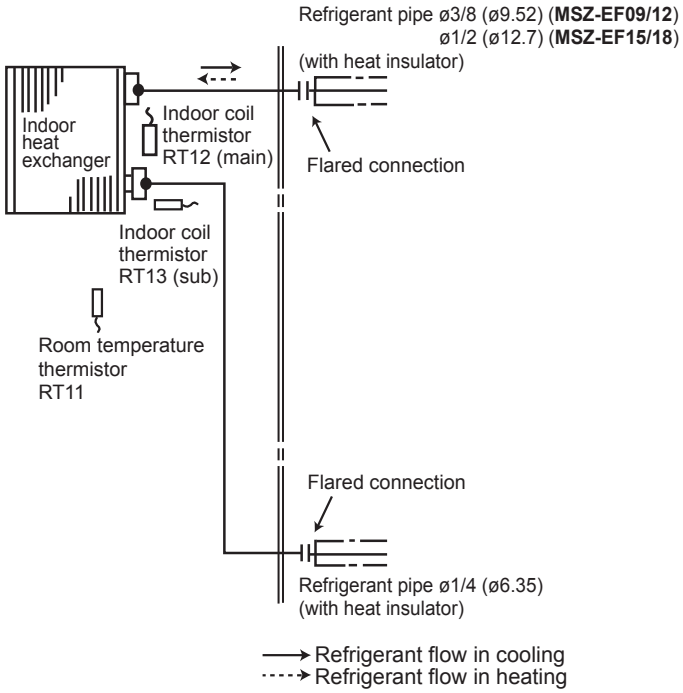

7 NOISE CRITERION CURVES

7-1. INDOOR UNIT

MSZ-EF09NAW
MSZ-EF09NAB
MSZ-EF09NAS

FAN SPEED	FUNCTION	SPL(dB(A))	LINE
Super High	COOLING	42	●——●
	HEATING	45	○——○

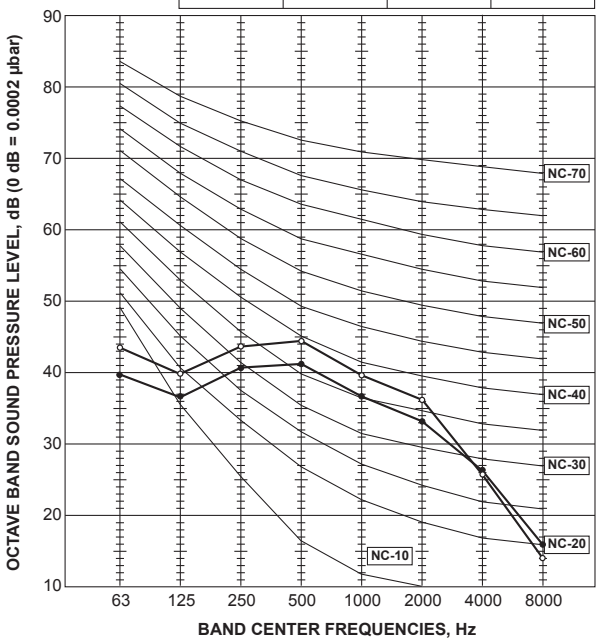

MSZ-EF12NAW
MSZ-EF12NAB
MSZ-EF12NAS

FAN SPEED	FUNCTION	SPL(dB(A))	LINE
Super High	COOLING	42	●——●
	HEATING	46	○——○

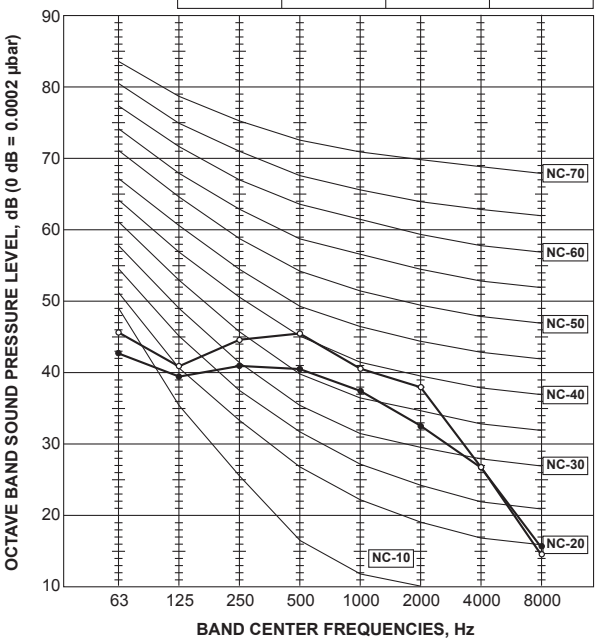

MSZ-EF15NAW
MSZ-EF15NAB
MSZ-EF15NAS

FAN SPEED	FUNCTION	SPL(dB(A))	LINE
Super High	COOLING	42	●——●
	HEATING	48	○——○

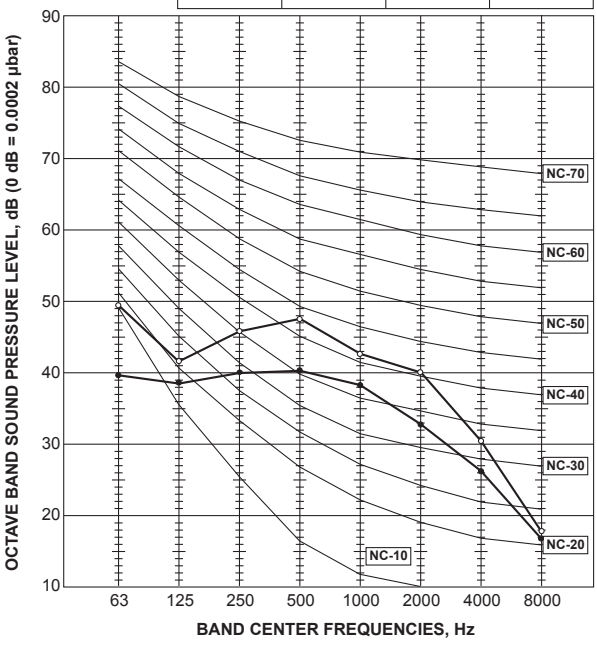

MSZ-EF18NAW
MSZ-EF18NAB
MSZ-EF18NAS

FAN SPEED	FUNCTION	SPL(dB(A))	LINE
Super High	COOLING	43	●——●
	HEATING	49	○——○

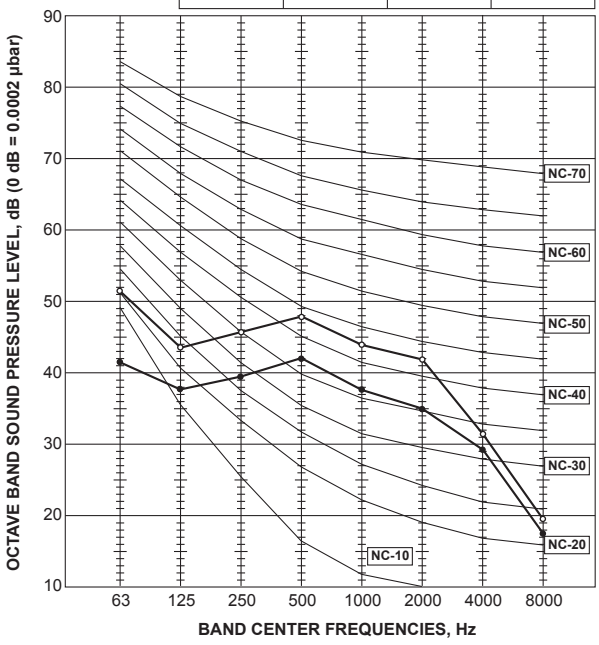

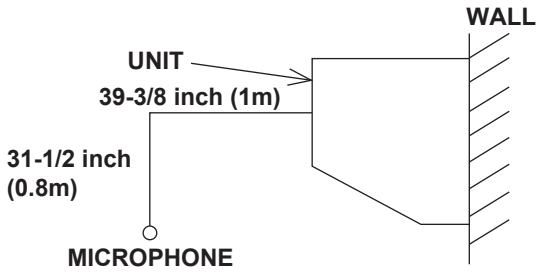

NOTE: The sound level is measured in an anechoic room where echoes are few, when compressor stops. The sound may be bigger than displayed level under actual installation condition by surrounding echoes. The sound level can be higher by about 2 dB than the displayed level during cooling and heating operation.

8 TEMPERATURE AND AIR FLOW DISTRIBUTIONS

MSZ-EF09NA

Temperature distribution

<Cooling mode>

Air volume: high
Air direction: auto (upward air flow)

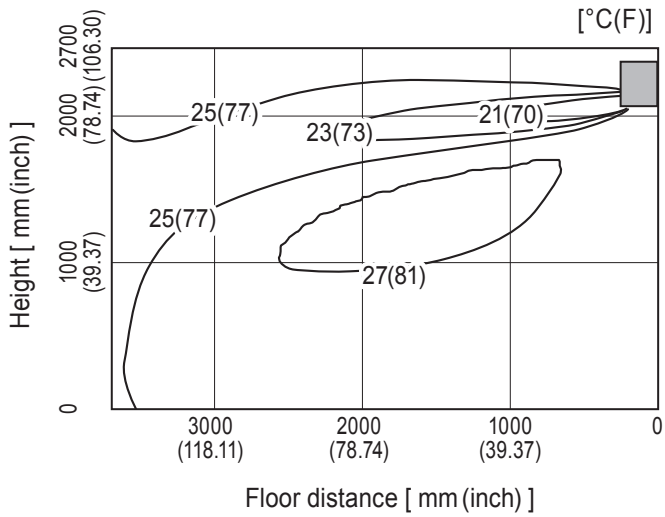

<Heating mode>

Air volume: high
Air direction: auto (downward air flow)

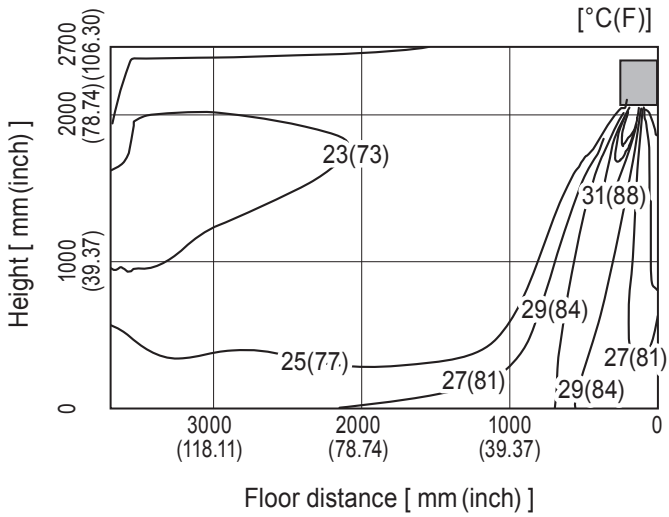

Note : These figures show typical airflow distributions in the conditions above. In the actual installation, they may differ from these figures under the influence of air temperature conditions, ceiling height, cooling/heating load,obstacles,etc.

MSZ-EF09NA

Airflow distribution

<Cooling mode> Air volume: high
Air direction: auto (upward air flow)

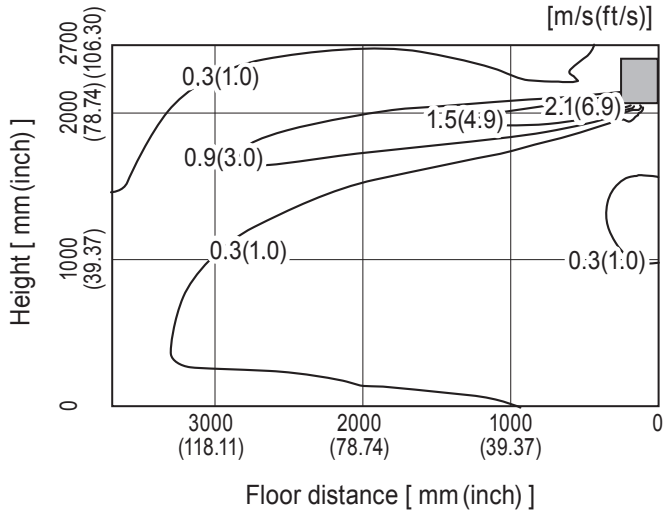

<Heating mode> Air volume: high
Air direction: auto (downward air flow)

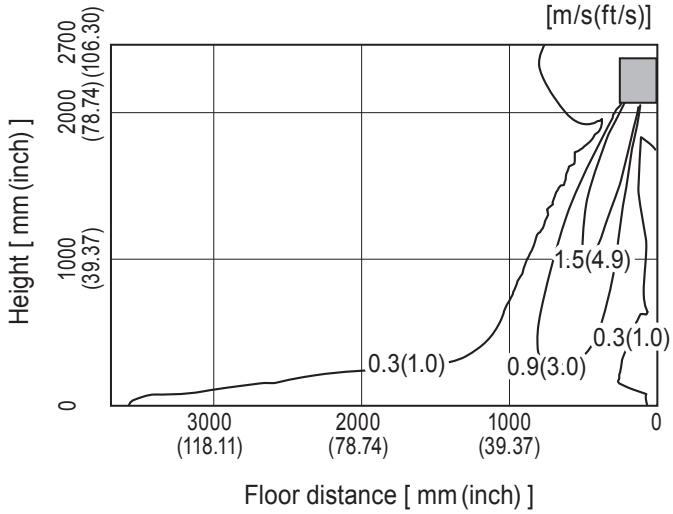

Note : These figures show typical airflow distributions in the conditions above. In the actual installation, they may differ from these figures under the influence of air temperature conditions, ceiling height, cooling/heating load,obstacles,etc.

MSZ-EF12NA

Temperature distribution

<Cooling mode>

Air volume: high
Air direction: auto (upward air flow)

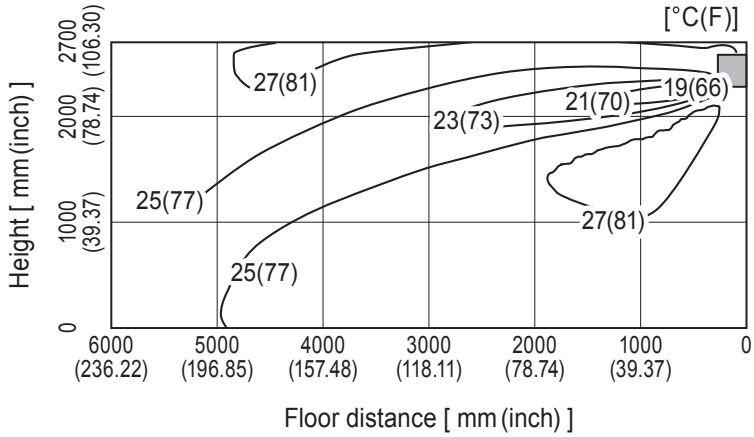

<Heating mode>

Air volume: high
Air direction: auto (downward air flow)

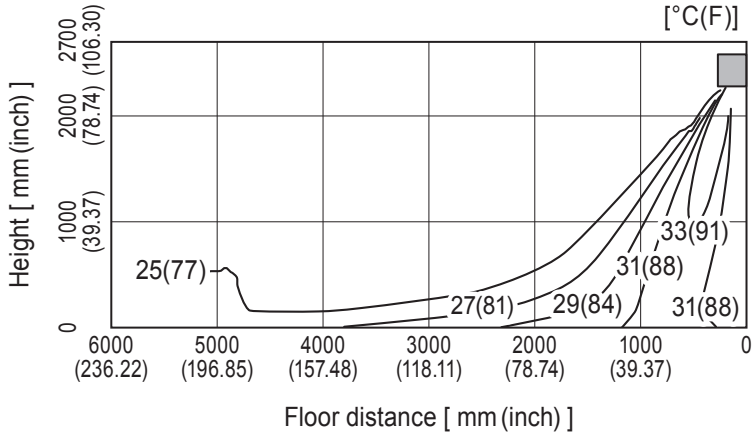

Note : These figures show typical airflow distributions in the conditions above. In the actual installation, they may differ from these figures under the influence of air temperature conditions, ceiling height, cooling/heating load,obstacles,etc.

MSZ-EF12NA

Airflow distribution

<Cooling mode>

Air volume: high
Air direction: auto (upward air flow)

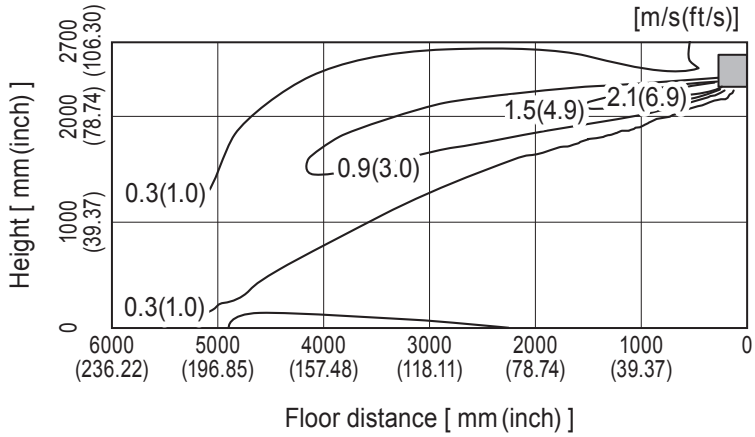

<Heating mode>

Air volume: high
Air direction: auto (downward air flow)

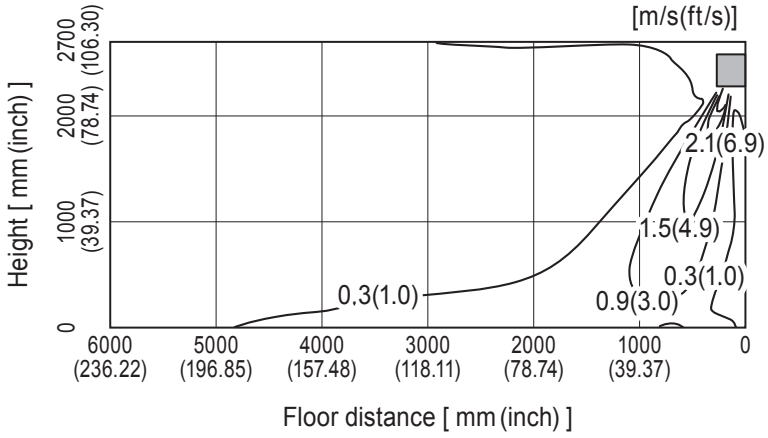

Note : These figures show typical airflow distributions in the conditions above. In the actual installation, they may differ from these figures under the influence of air temperature conditions, ceiling height, cooling/heating load,obstacles,etc.

MSZ-EF15NA

Temperature distribution

<Cooling mode>

Air volume: high
Air direction: auto (upward air flow)

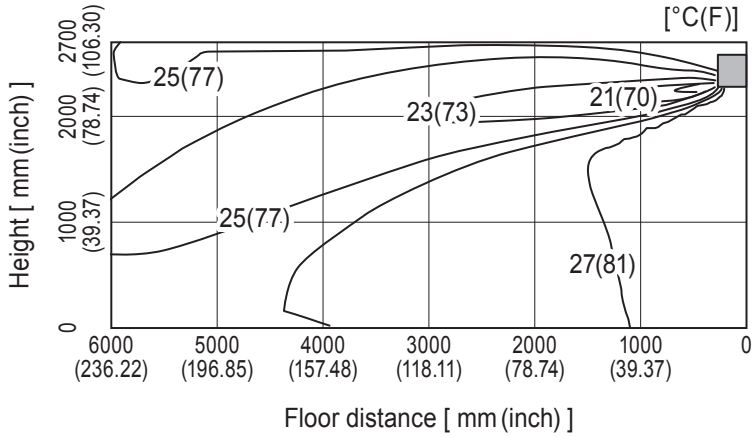

<Heating mode>

Air volume: high
Air direction: auto (downward air flow)

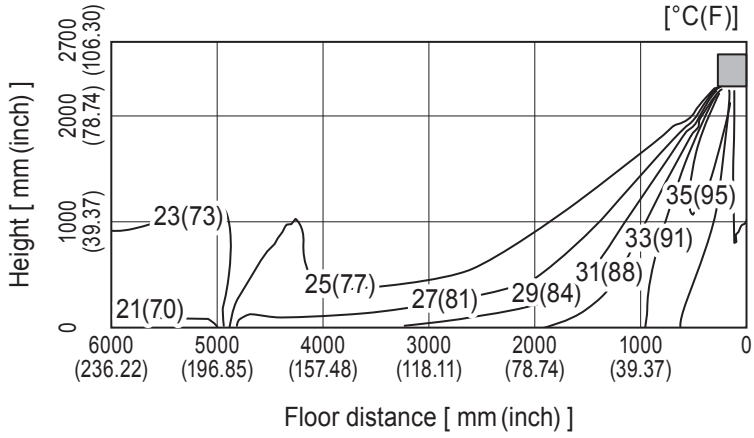

Note : These figures show typical airflow distributions in the conditions above. In the actual installation, they may differ from these figures under the influence of air temperature conditions, ceiling height, cooling/heating load,obstacles,etc.

MSZ-EF15NA

Airflow distribution

<Cooling mode>

Air volume: high
Air direction: auto (upward air flow)

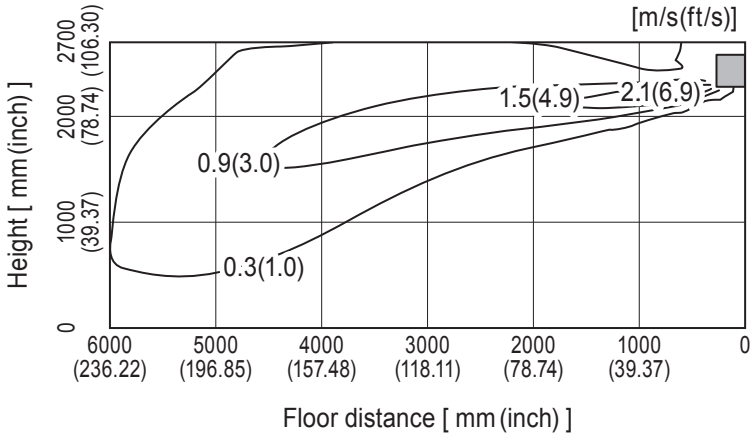

<Heating mode>

Air volume: high
Air direction: auto (downward air flow)

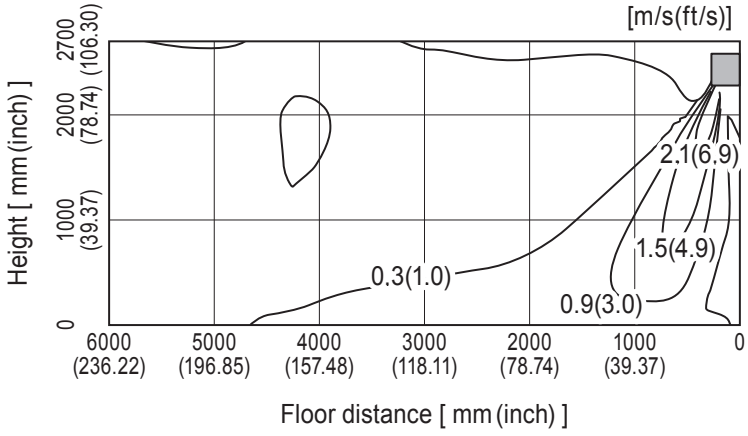

Note : These figures show typical airflow distributions in the conditions above. In the actual installation, they may differ from these figures under the influence of air temperature conditions, ceiling height, cooling/heating load,obstacles,etc.

MSZ-EF18NA

Temperature distribution

<Cooling mode> Air volume: high
Air direction: auto (upward air flow)

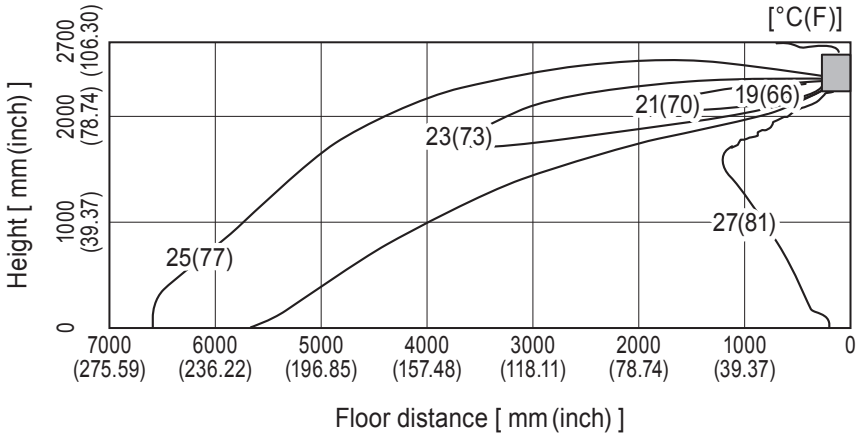

<Heating mode> Air volume: high
Air direction: auto (downward air flow)

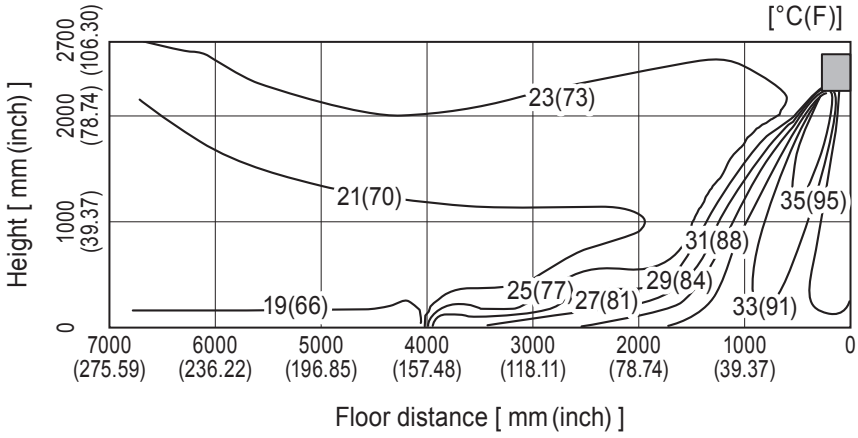

Note : These figures show typical airflow distributions in the conditions above. In the actual installation, they may differ from these figures under the influence of air temperature conditions, ceiling height, cooling/heating load,obstacles,etc.

MSZ-EF18NA

Airflow distribution

<Cooling mode> Air volume: high
Air direction: auto (upward air flow)

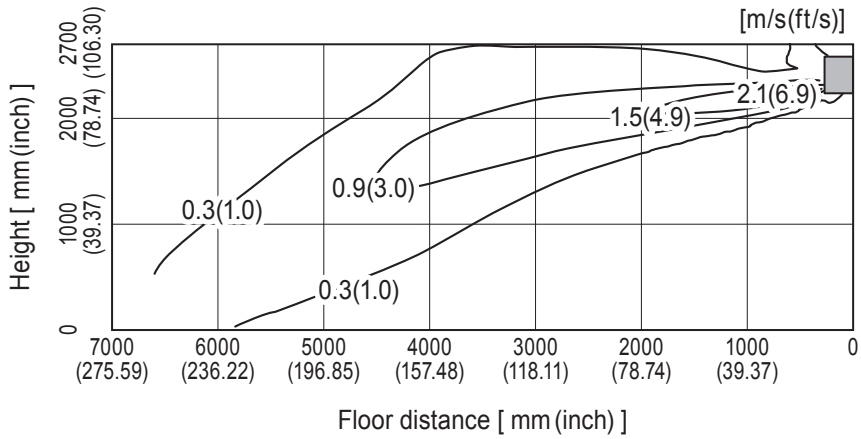

<Heating mode> Air volume: high
Air direction: auto (downward air flow)

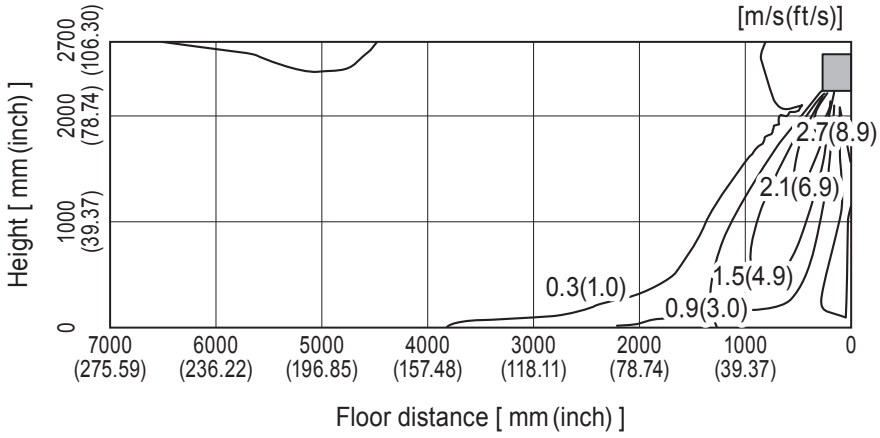

Note : These figures show typical airflow distributions in the conditions above. In the actual installation, they may differ from these figures under the influence of air temperature conditions, ceiling height, cooling/heating load,obstacles,etc.

B. MUTLI-USE

MLZ-KP09NA MLZ-KP12NA MLZ-KP18NA

1 REFERENCE SERVICE MANUAL

For information on service, please refer to the service manual as follows.

1-1. INDOOR UNIT

Model name	Service Ref.	Service Manual No.
MLZ-KP09NA MLZ-KP12NA MLZ-KP18NA	MLZ-KP09NA - U1 MLZ-KP12NA - U1 MLZ-KP18NA - U1	OBH802 OBB802

2 SPECIFICATIONS

2-1. INDOOR UNIT
MLZ-KP09NA MLZ-KP12NA MLZ-KP18NA

Indoor model			MLZ-KP09NA	MLZ-KP12NA	MLZ-KP18NA
Power supply	V, phase, Hz		208/230, 1, 60		
Max. fuse size (time delay)/ Disconnect switch		A	15		
Airflow High - Med. - Low - SLow	COOL Dry (Wet)	CFM	311 - 283 - 254 - 212	332 - 297 - 258 - 212	403 - 346 - 293 - 212
	HEAT Dry	CFM	325 - 290 - 247 - 212	350 - 311 - 272 - 212	417 - 364 - 311 - 212
Sound level High - Med. - Low - SLow	Cooling	dB (A)	38 - 34 - 31 - 27	40 - 36 - 32 - 27	47 - 41 - 36 - 29
	Heating	dB (A)	37 - 34 - 29 - 26	40 - 36 - 32 - 26	48 - 42 - 37 - 26
Cond. drain connection O.D.		in.	Ø1 (26 mm)		
Dimensions	W	in.	43-3/8		
	D		14-3/16		
	H		7-5/16		
Weight		lb.	34		
External finish			White		
Control voltage (by built-in transformer)			12 - 24 V DC		

NOTE: Test conditions are based on ARI 210/240.

Specifications and rated conditions of main electric parts

Item \ Model		MLZ-KP09NA MLZ-KP12NA MLZ-KP18NA
Fuse	(F11)	T3.15AL250V
Horizontal vane motor	(MV1)	12 V DC
Vertical vane motor	(MV2)	12 V DC
Varistor	(NR11)	470 V
DRAIN PUMP	(DP)	230 V 6.4 W
FLOAT SENSOR	(FS)	5 V DC

OPERATING RANGE

(1) POWER SUPPLY

	Rated voltage	Guaranteed voltage (V)
Indoor unit	208/230 V 1 phase 60 Hz	Min. 187 208 230 Max. 253

(2) OPERATION

*The operating range of the outdoor unit depends on the connected outdoor unit.

Mode	Condition	Intake air temperature (°F)			
		Indoor		Outdoor	
		DB	WB	DB	WB
Cooling	Standard temperature	80	67	95	—
	Maximum temperature	90	73	115	—
	Minimum temperature	67	57	14	—
	Maximum humidity	78%		—	
Heating	Standard temperature	70	60	47	43
	Maximum temperature	80	67	75	65
	Minimum temperature	70	60	-13	-14

OUTLET AIR SPEED AND COVERAGE

1. Multi connection

Model	Mode	Function	Airflow (CFM)	Air speed (ft./s.)	Coverage (ft.)
MLZ-KP09NA	HEAT	Dry	311	13.0	20.7
	COOL	Dry	325	13.6	21.7
		Wet	—	—	—
MLZ-KP12NA	HEAT	Dry	332	13.9	22.1
	COOL	Dry	350	14.6	23.3
		Wet	—	—	—
MLZ-KP18NA	HEAT	Dry	403	16.9	26.7
	COOL	Dry	417	17.5	27.6
		Wet	—	—	—

- The air coverage is the figure up to the position where the air speed is 1 ft./s., when air is blown out horizontally from the unit properly at the High speed position.
  The coverage should be used only as a general guideline since it varies according to the size of the room and furniture arranged inside the room.

3 OUTLINES AND DIMENSIONS

3-1. INDOOR UNIT

Unit: inch

MLZ-KP09NA MLZ-KP12NA MLZ-KP18NA

INDOOR UNIT

INDOOR UNIT OUTLINE DRAWING

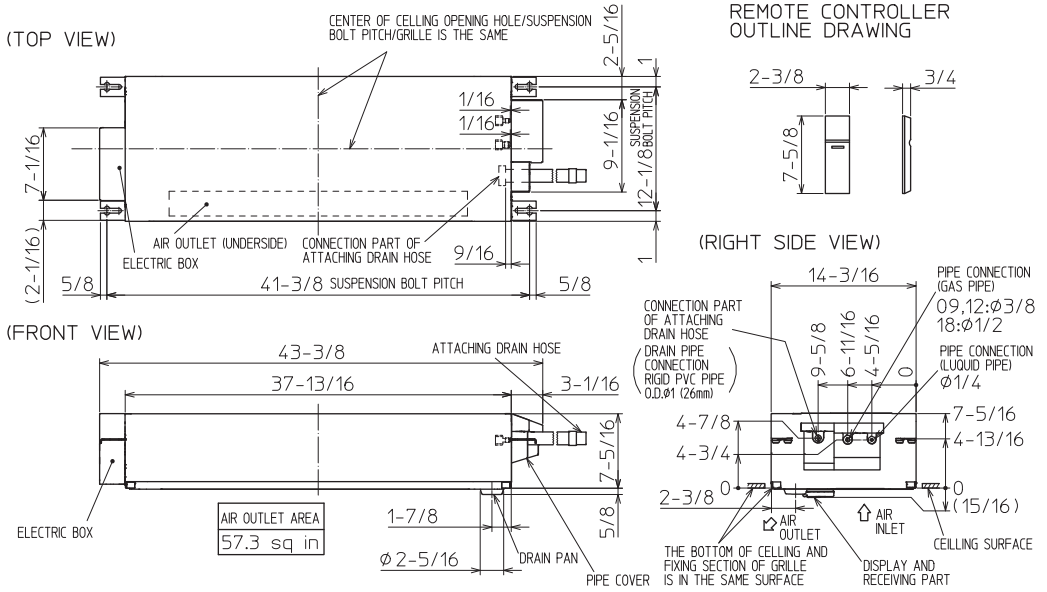

REMOTE CONTROLLER OUTLINE DRAWING

GRILLE OUTLINE DRAWING
(MLP-444W)

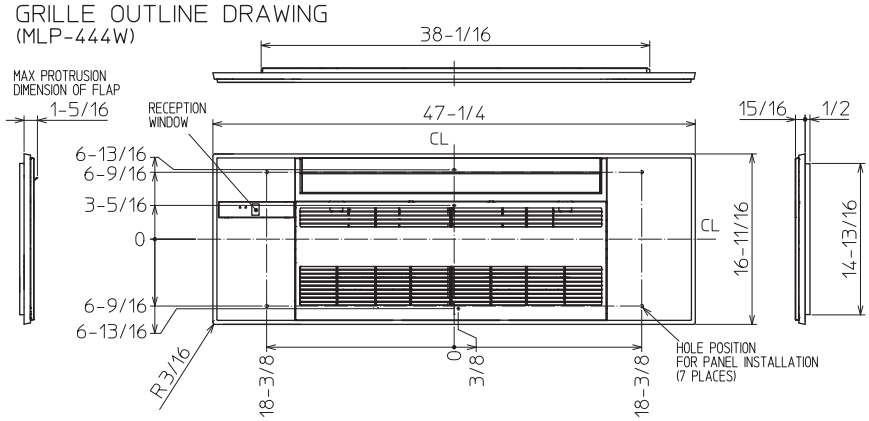

		KP09/12NA	KP18NA
EXTENSION PIPE	LIQUID PIPE O.D.	ø1/4	
	GAS PIPE O.D.	ø3/8	ø1/2
CONNECTIONG OF PIPE	LIQUID PIPE	FLARED CONNECTION ø1/4	
	GAS PIPE	FLARED CONNECTION ø3/8	FLARED CONNECTION ø1/2
DRAIN HOSE		HEAT INSULATER O.D. ø1-1/4 / CONNECTION I.D. ø1 / EFFECTIVE LENGTH 18-7/8	
DRAIN PIPE CONNECTION		RIGID PVC PIPE O.D. ø1 (26mm)	

NOTE1. CUT THE DRAIN HOSE (ACCESSORY) FOR USE, IF NECESSARY.

INDOOR UNIT DETAIL VIEW
(TOP VIEW)

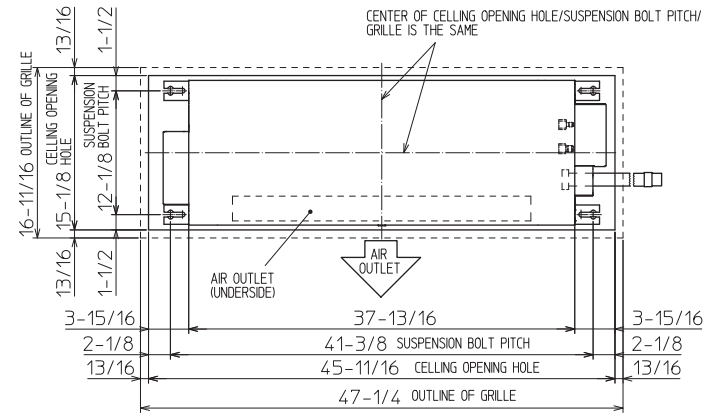

THE METHOD FOR STANDING DRAIN FROM INDOOR UNIT
※ CUT THE DRAIN HOSE (ACCESSORY) FOR USE, IF NECESSARY.

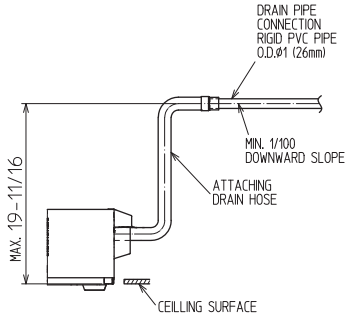

(FRONT VIEW)

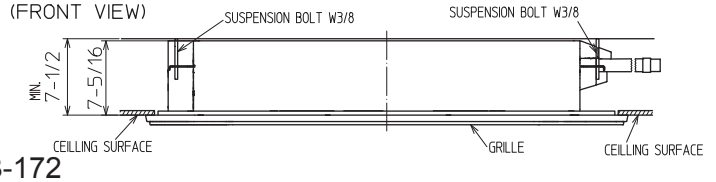

4 POSITION OF THE CENTER OF GRAVITY

4-1. INDOOR UNIT

Unit: inch (mm)

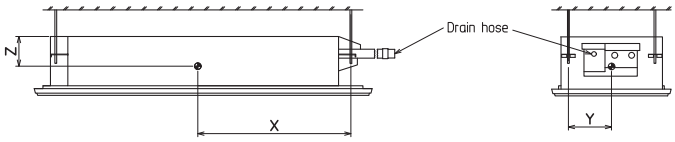

Model name	X	Y	Z
MLZ-KP09NA **MLZ-KP12NA** **MLZ-KP18NA**	21-7/16 (545)	6 (152)	4-1/8 (105)

5 WIRING DIAGRAM

5-1. INDOOR UNIT

MLZ-KP09NA
MLZ-KP12NA

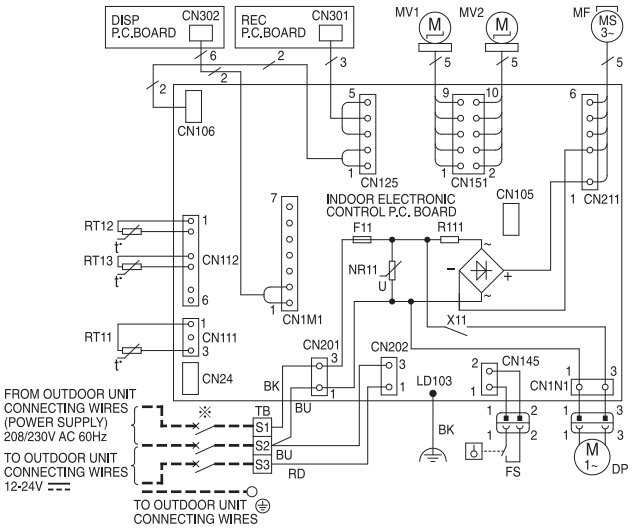

SYMBOL	NAME	SYMBOL	NAME
MF	FAN MOTOR	RT11	ROOM TEMP. THERMISTOR
MV1	HORIZONTAL VANE MOTOR	RT12	COIL TEMP. THERMISTOR(MAIN)
MV2	VERTICAL VANE MOTOR	RT13	COIL TEMP. THERMISTOR(SUB)
DP	DRAIN PUMP	NR11	VARISTOR
FS	FLOAT SENSOR	R111	RESISTOR
F11	FUSE (T3.15AL250V)		
X11	RELAY		
TB	TERMINAL BLOCK		

※ A disconnect should be required by local code.
※ Se procurer un sectionneur conforme aux réglementations locales.

NOTES :
1. About the outdoor side electric wiring refer to the outdoor unit electric wiring diagram for servicing.
2. Use copper conductors only. (For field wiring)
3. Symbols below indicate.

: Terminal block
: Connector

REMARQUES :
1. Pour le câblage électronique côté extérieur, se reporter au schéma d'entretien du câblage électronique de l'appareil extérieur.
2. Utiliser des fils d'alimentation en cuivre.
3. Les symboles ont les significations suivantes

: Borne
: Connecteur

MLZ-KP18NA

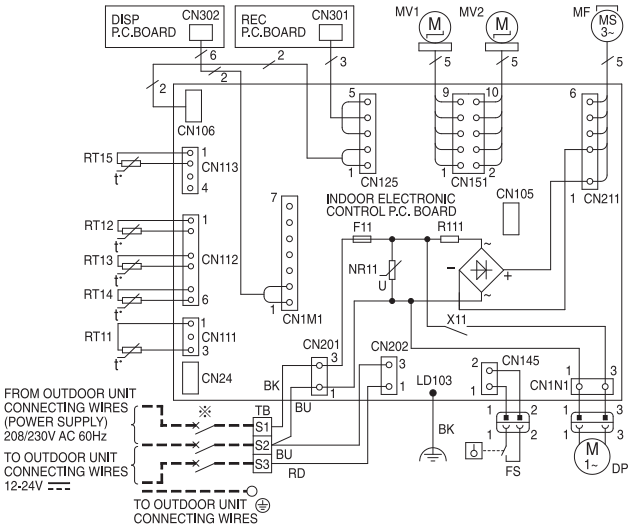

SYMBOL	NAME	SYMBOL	NAME
MF	FAN MOTOR	RT11	ROOM TEMP. THERMISTOR
MV1	HORIZONTAL VANE MOTOR	RT12	COIL TEMP. THERMISTOR(MAIN1)
MV2	VERTICAL VANE MOTOR	RT13	COIL TEMP. THERMISTOR(SUB)
DP	DRAIN PUMP	RT14	COIL TEMP. THERMISTOR(MAIN2)
FS	FLOAT SENSOR	RT15	COIL TEMP. THERMISTOR(MAIN3)
F11	FUSE (T3.15AL250V)	NR11	VARISTOR
X11	RELAY	R111	RESISTOR
TB	TERMINAL BLOCK		

※ A disconnect should be required by local code.
※ Se procurer un sectionneur conforme aux réglementations locales.

NOTES :
1. About the outdoor side electric wiring refer to the outdoor unit electric wiring diagram for servicing.
2. Use copper conductors only. (For field wiring)
3. Symbols below indicate.

: Terminal block
: Connector

REMARQUES :
1. Pour le câblage électronique côté extérieur, se reporter au schéma d'entretien du câblage électronique de l'appareil extérieur.
2. Utiliser des fils d'alimentation en cuivre.
3. Les symboles ont les significations suivantes

: Borne
: Connecteur

6 REFRIGERANT SYSTEM DIAGRAM

6-1. INDOOR UNIT

Unit: inch(mm)

MLZ-KP09NA
MLZ-KP12NA

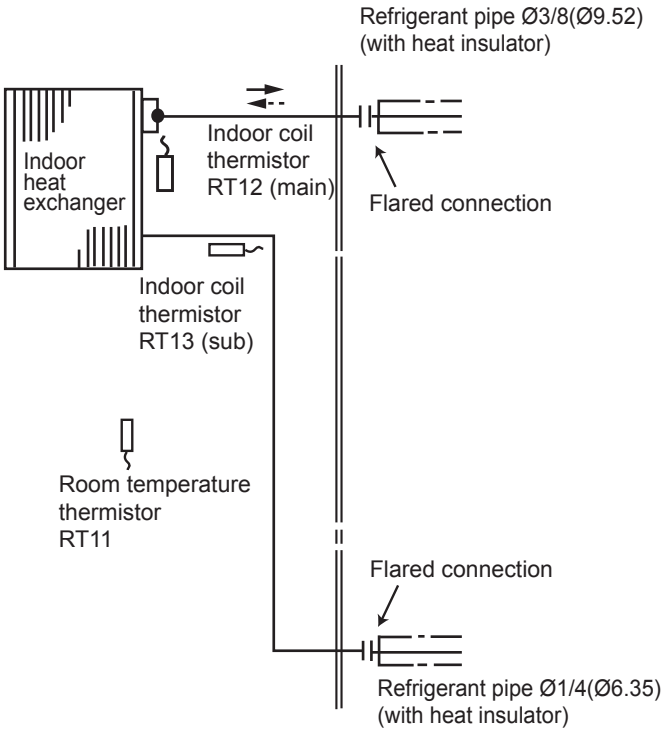

MLZ-KP18NA

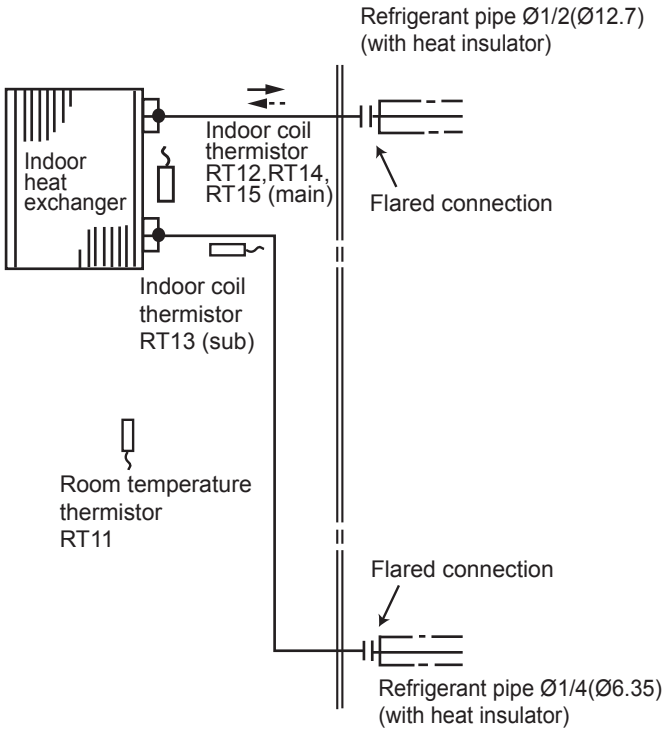

→ Refrigerant flow in cooling
--→ Refrigerant flow in heating

7 NOISE CRITERION CURVES

7-1. INDOOR UNIT

MLZ-KP09NA

FAN SPEED	FUNCTION	SPL(dB(A))	LINE
High	COOLING	38	●——●
	HEATING	37	○——○

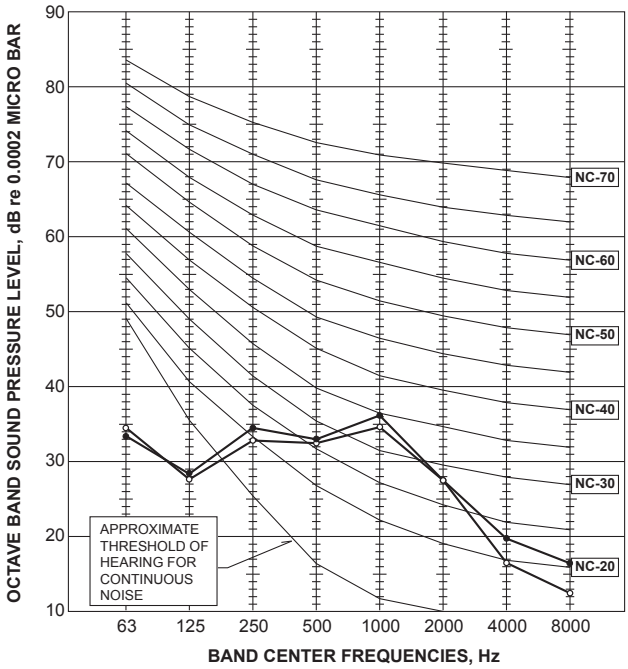

MLZ-KP12NA

FAN SPEED	FUNCTION	SPL(dB(A))	LINE
High	COOLING	40	●——●
	HEATING	40	○——○

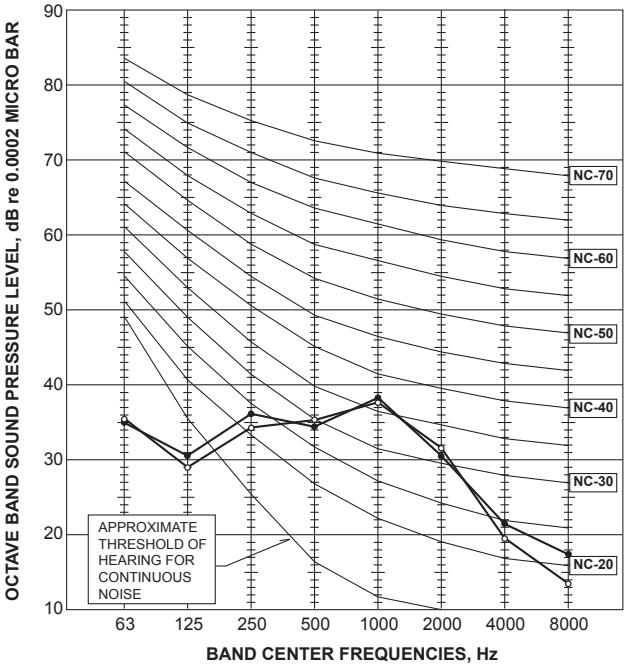

MLZ-KP18NA

FAN SPEED	FUNCTION	SPL(dB(A))	LINE
High	COOLING	47	●——●
	HEATING	48	○——○

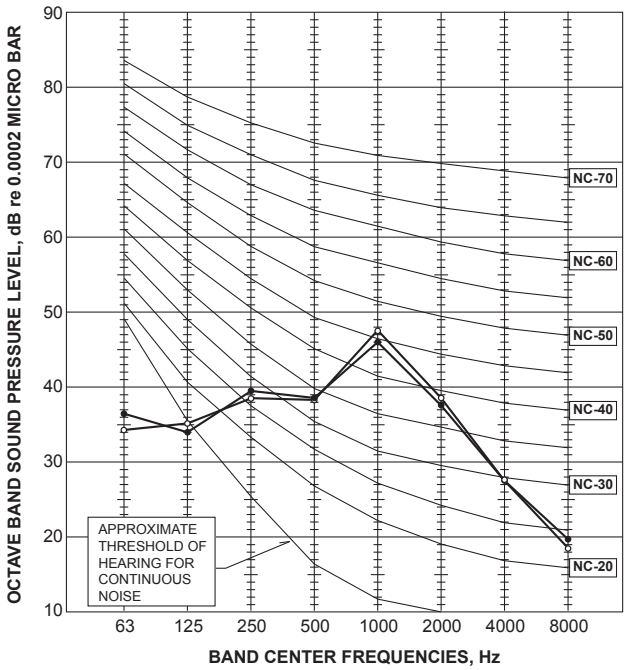

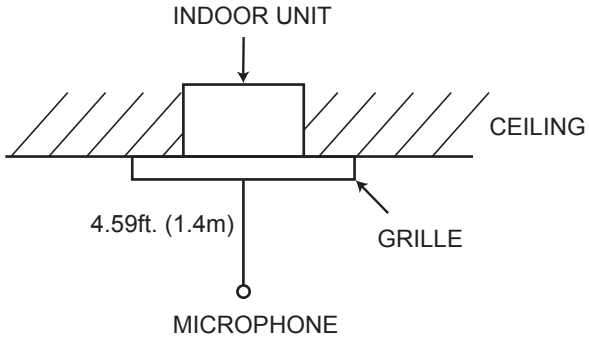

8 TEMPERATURE AND AIR FLOW DISTRIBUTIONS

MLZ-KP09NA

Temperature distribution

<Cooling mode>

Air volume: high
Air direction: auto (upward air flow)

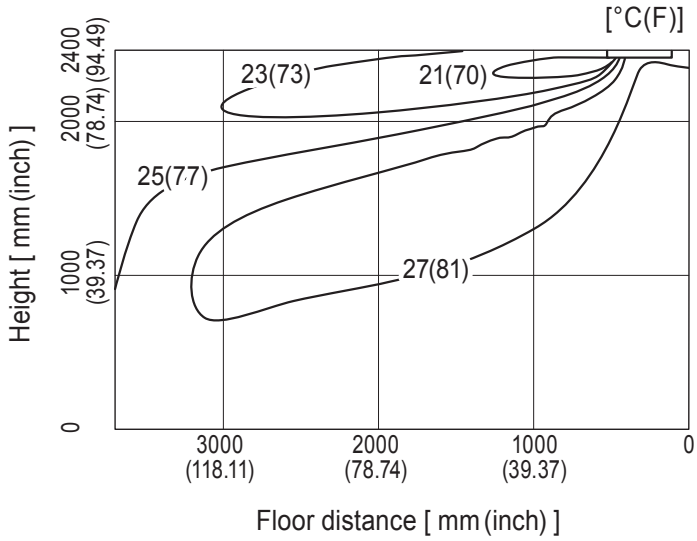

<Heating mode>

Air volume: high
Air direction: auto (downward air flow)

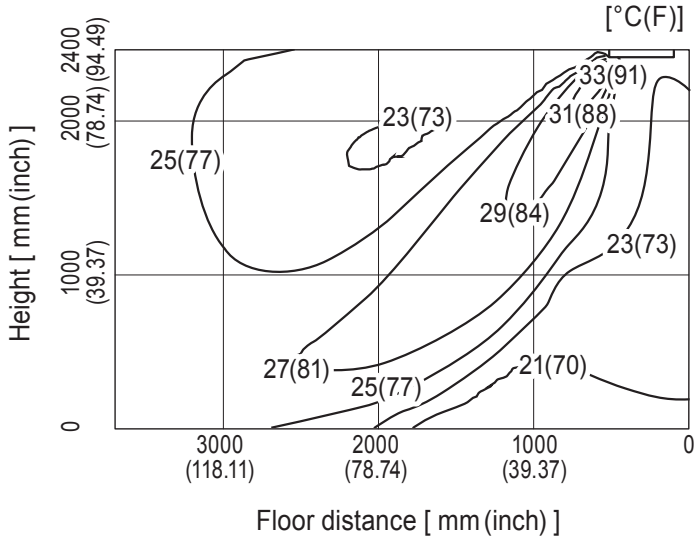

Note : These figures show typical airflow distributions in the conditions above. In the actual installation, they may differ from these figures under the influence of air temperature conditions, ceiling height, cooling/heating load,obstacles,etc.

MLZ-KP09NA

Airflow distribution

<Cooling mode>

Air volume: high
Air direction: auto (upward air flow)

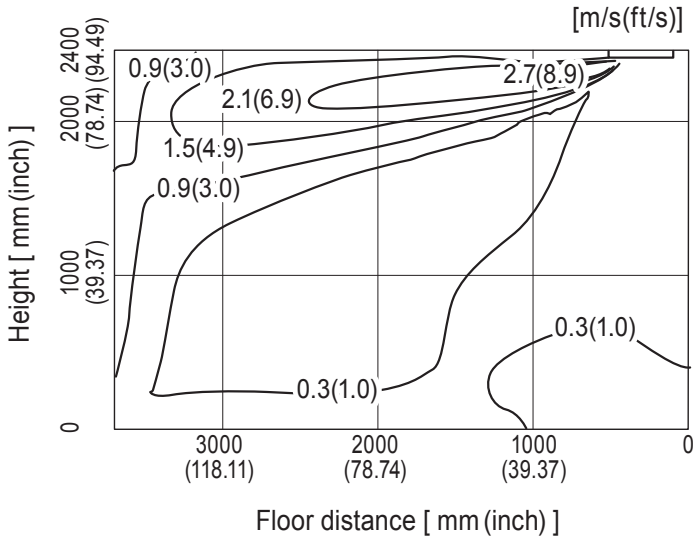

<Heating mode>

Air volume: high
Air direction: auto (downward air flow)

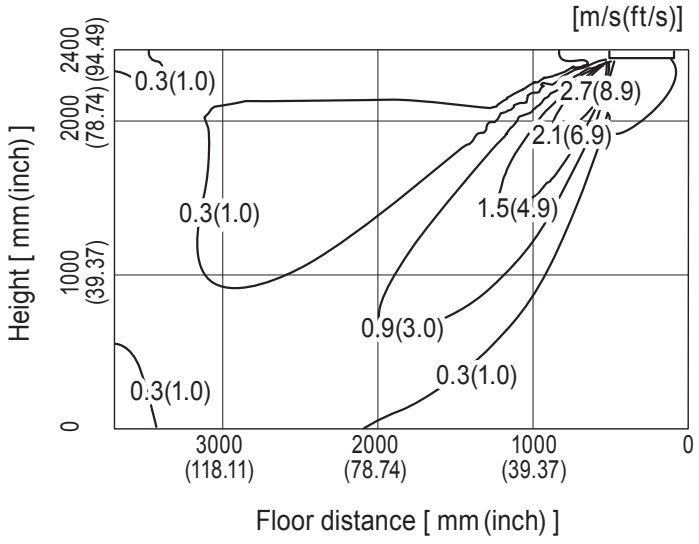

Note : These figures show typical airflow distributions in the conditions above. In the actual installation, they may differ from these figures under the influence of air temperature conditions, ceiling height, cooling/heating load,obstacles,etc.

MLZ-KP12NA

Temperature distribution

<Cooling mode>

Air volume: high
Air direction: auto (upward air flow)

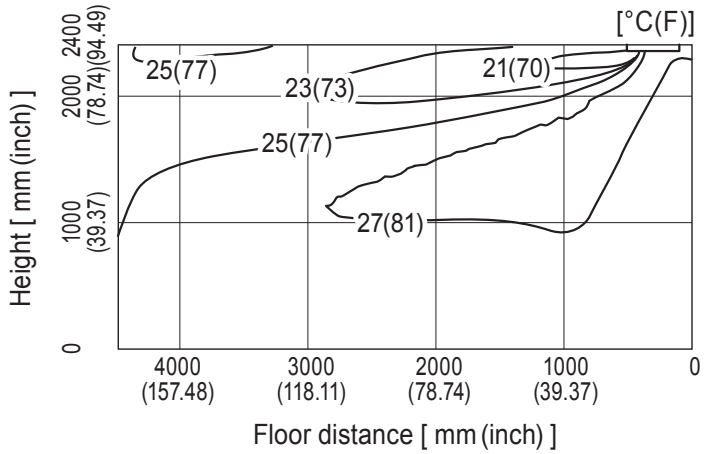

<Heating mode>

Air volume: high
Air direction: auto (downward air flow)

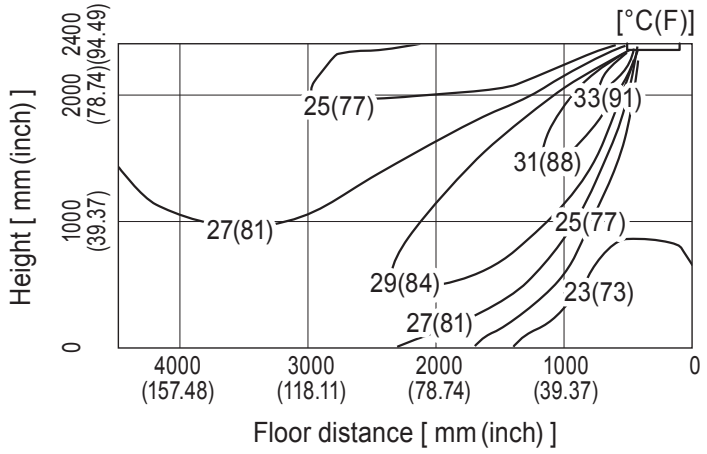

Note : These figures show typical airflow distributions in the conditions above. In the actual installation, they may differ from these figures under the influence of air temperature conditions, ceiling height, cooling/heating load,obstacles,etc.

MLZ-KP12NA

Airflow distribution

<Cooling mode>

Air volume: high
Air direction: auto (upward air flow)

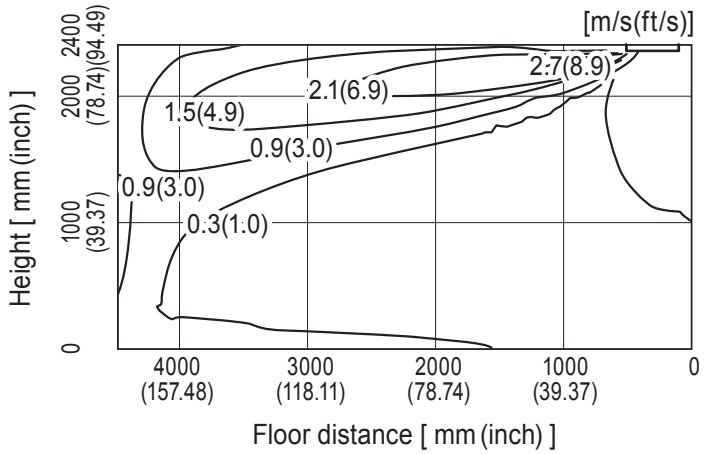

<Heating mode>

Air volume: high
Air direction: auto (downward air flow)

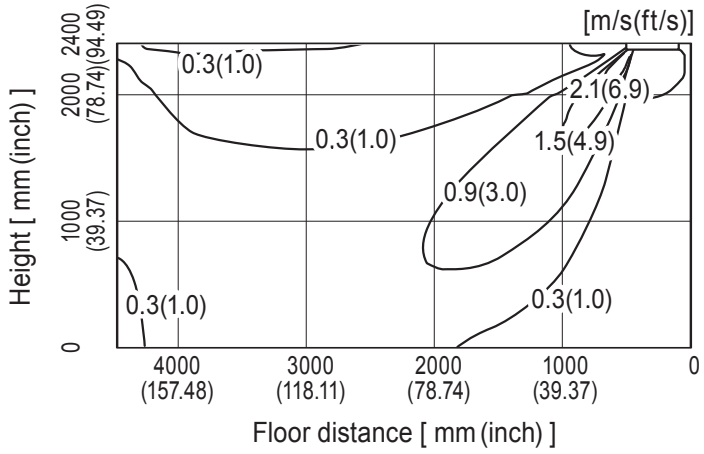

Note : These figures show typical airflow distributions in the conditions above. In the actual installation, they may differ from these figures under the influence of air temperature conditions, ceiling height, cooling/heating load,obstacles,etc.

MLZ-KP18NA

Temperature distribution

<Cooling mode>

Air volume: high
Air direction: auto (upward air flow)

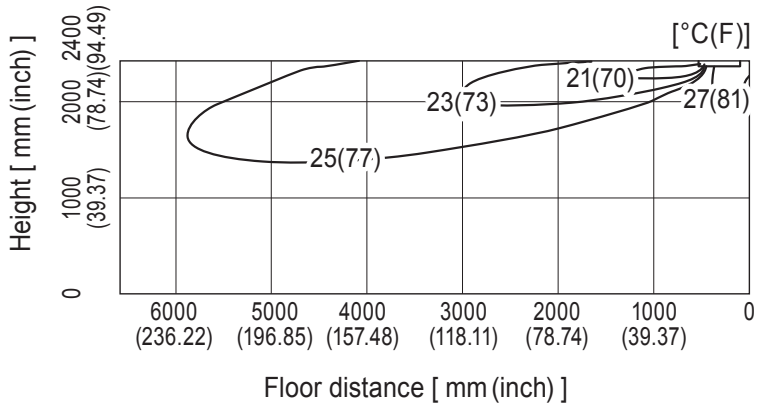

<Heating mode>

Air volume: high
Air direction: auto (downward air flow)

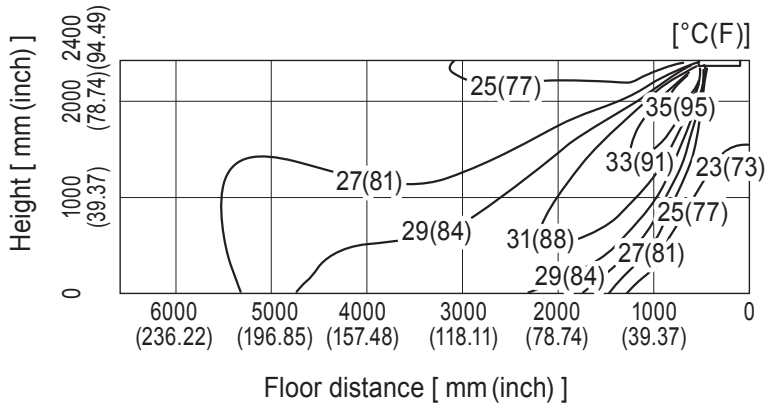

Note : These figures show typical airflow distributions in the conditions above. In the actual installation, they may differ from these figures under the influence of air temperature conditions, ceiling height, cooling/heating load,obstacles,etc.

MLZ-KP18NA

Airflow distribution

<Cooling mode>

Air volume: high
Air direction: auto (upward air flow)

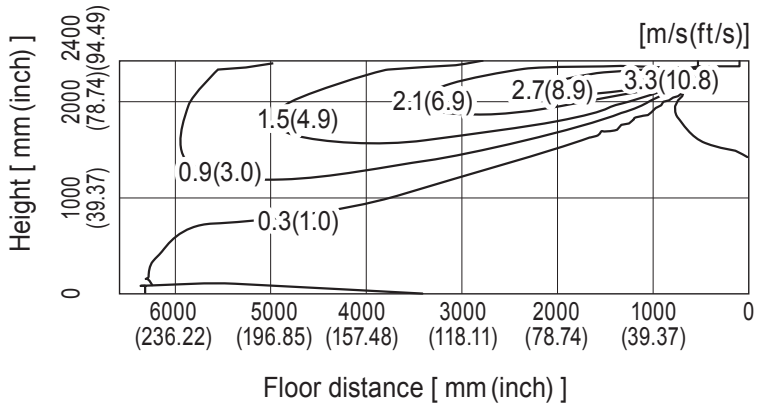

<Heating mode>

Air volume: high
Air direction: auto (downward air flow)

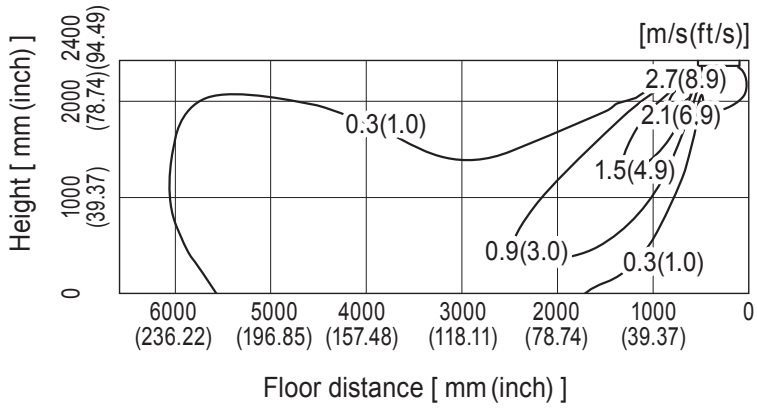

Note : These figures show typical airflow distributions in the conditions above. In the actual installation, they may differ from these figures under the influence of air temperature conditions, ceiling height, cooling/heating load,obstacles,etc.

B. MUTLI-USE

MVZ-A12AA7 MVZ-A18AA7 MVZ-A24AA7 MVZ-A30AA7 MVZ-A36AA7

1 REFERENCE SERVICE MANUAL

For information on service, please refer to the service manual as follows.

1-1. INDOOR UNIT

Model name	Service Ref.	Service Manual No.
MVZ-A12AA7 MVZ-A18AA7 MVZ-A24AA7 MVZ-A30AA7 MVZ-A36AA7	MVZ-A12AA7.MX MVZ-A18AA7.MX MVZ-A24AA7.MX MVZ-A30AA7.MX MVZ-A36AA7.MX	MD-1404-K009 MD-1404-K010

2 SPECIFICATIONS

2-1. INDOOR UNIT
MVZ-A12AA7

Power source			1-phase 208/230 V 60 Hz
Cooling capacity *1		BTU/h	12,000
*1		kW	3.5
*2	Power input	kW	0.080
*2	Current input	A	0.80/0.70
Heating capacity *3		BTU/h	13,500
*3		kW	4.0
*2	Power input	kW	0.080
*2	Current input	A	0.80/0.70
External dimension HxWxD		inch	50-1/4 x 17 x 21-5/8
		mm	1,275 x 432 x 548
Net weight		lbs (kg)	113 (51)
Heat exchanger			Cross fin (Aluminum fin and copper tube)
FAN	Type x Quantity		Sirocco fan x 1
	External	in.WG	<0.30> - 0.50 - <0.80>
*4	static press.	Pa	<75> - 125 - <200>
	Motor Type		DC motor
	Motor output	kW	0.121
	Air flow rate	cfm	280 - 340 - 400
	(Low-Mid-High)	m^3/min	7.9 - 9.6 - 11.3
		L/s	132 - 160 - 188
Sound pressure level *2 (Low-Mid-High)		dB <A>	27-31-35
Protection device			Fuse
Diameter of refrigerant pipe	Liquid (R410A)	inch (mm)	1/4 (6.35)Flare
	Gas (R410A)	inch (mm)	1/2 (12.7)Flare
Field drain pipe size		inch (mm)	3/4 (19.05) FPT

NOTE:
*1.Nominal cooling conditions
Indoor: 80°FD.B./67°FW.B. (26.7°CD.B./19.4°CW.B.), Outdoor: 95°FD.B. (35°CD.B.)
Pipe length: 25 ft. (7.6 m), Level difference: 0 ft. (0 m)
*2.The values are measured at the factory setting of external static pressure.
*3.Nominal heating conditions
Indoor: 70°FD.B. (21.1°CD.B.), Outdoor: 47°FD.B./43°FW.B. (8.3°CD.B./6.1°CW.B.)
Pipe length: 25 ft. (7.6 m), Level difference: 0 ft. (0 m)
*4.The factory setting of external static pressure is shown without < >.
Refer to "AIR FLOW DATA", according to the external static pressure, in DATA BOOK for the usable range of air flow rate.

MVZ-A18AA7

Power source			1-phase 208/230 V 60 Hz
Cooling capacity *1		BTU/h	18,000
*1		kW	5.3
*2	Power input	kW	0.130
*2	Current input	A	1.20/1.10
Heating capacity *3		BTU/h	20,000
*3		kW	5.9
*2	Power input	kW	0.130
*2	Current input	A	1.20/1.10
External dimension HxWxD		inch	50-1/4 x 17 x 21-5/8
		mm	1,275 x 432 x 548
Net weight		lbs (kg)	113 (51)
Heat exchanger			Cross fin (Aluminum fin and copper tube)
FAN	Type x Quantity		Sirocco fan x 1
	External	in.WG	<0.30> - 0.50 - <0.80>
*4	static press.	Pa	<75> - 125 - <200>
	Motor Type		DC motor
	Motor output	kW	0.121
	Air flow rate	cfm	410 - 497 - 585
	(Low-Mid-High)	m^3/min	11.6 - 14.1 - 16.6
		L/s	193 - 235 - 277
Sound pressure level *2 (Low-Mid-High)		dB <A>	28-32-36
Protection device			Fuse
Diameter of refrigerant pipe	Liquid (R410A)	inch (mm)	1/4 (6.35)Flare
	Gas (R410A)	inch (mm)	1/2 (12.7)Flare
Field drain pipe size		inch (mm)	3/4 (19.05) FPT

NOTE:

*1.Nominal cooling conditions
Indoor: 80°FD.B./67°FW.B. (26.7°CD.B./19.4°CW.B.), Outdoor: 95°FD.B. (35°CD.B.)
Pipe length: 25 ft. (7.6 m), Level difference: 0 ft. (0 m)

*2.The values are measured at the factory setting of external static pressure.

*3.Nominal heating conditions
Indoor: 70°FD.B. (21.1°CD.B.), Outdoor: 47°FD.B./43°FW.B. (8.3°CD.B./6.1°CW.B.)
Pipe length: 25 ft. (7.6 m), Level difference: 0 ft. (0 m)

*4.The factory setting of external static pressure is shown without < >.
Refer to "AIR FLOW DATA", according to the external static pressure, in DATA BOOK for the usable range of air flow rate.

MVZ-A24AA7

Power source			1-phase 208/230 V 60 Hz
Cooling capacity *1		BTU/h	24,000
*1		kW	7.0
*2	Power input	kW	0.180
*2	Current input	A	1.60/1.40
Heating capacity *3		BTU/h	27,000
*3		kW	7.9
*2	Power input	kW	0.180
*2	Current input	A	1.60/1.40
External dimension HxWxD		inch	50-1/4 x 17 x 21-5/8
		mm	1,275 x 432 x 548
Net weight		lbs (kg)	113 (51)
Heat exchanger			Cross fin (Aluminum fin and copper tube)
FAN	Type x Quantity		Sirocco fan x 1
	External	in.WG	<0.30> - 0.50 - <0.80>
*4	static press.	Pa	<75> - 125 - <200>
	Motor Type		DC motor
	Motor output	kW	0.121
	Air flow rate	cfm	515 - 625 - 735
	(Low-Mid-High)	m^3/min	14.6 - 17.7 - 20.8
		L/s	243 - 295 - 347
Sound pressure level *2 (Low-Mid-High)		dB <A>	30-34-38
Protection device			Fuse
Diameter of refrigerant pipe	Liquid (R410A)	inch (mm)	3/8 (9.52)Flare
	Gas (R410A)	inch (mm)	5/8 (15.88)Flare
Field drain pipe size		inch (mm)	3/4 (19.05) FPT

NOTE:

*1.Nominal cooling conditions
Indoor: 80°FD.B./67°FW.B. (26.7°CD.B./19.4°CW.B.), Outdoor: 95°FD.B. (35°CD.B.)
Pipe length: 25 ft. (7.6 m), Level difference: 0 ft. (0 m)

*2.The values are measured at the factory setting of external static pressure.

*3.Nominal heating conditions
Indoor: 70°FD.B. (21.1°CD.B.), Outdoor: 47°FD.B./43°FW.B. (8.3°CD.B./6.1°CW.B.)
Pipe length: 25 ft. (7.6 m), Level difference: 0 ft. (0 m)

*4.The factory setting of external static pressure is shown without < >.
Refer to "AIR FLOW DATA", according to the external static pressure, in DATA BOOK for the usable range of air flow rate.

MVZ-A30AA7

Power source			1-phase 208/230 V 60 Hz
Cooling capacity	*1	BTU/h	30,000
	*1	kW	8.8
	*2 Power input	kW	0.210
	*2 Current input	A	2.00/1.70
Heating capacity	*3	BTU/h	34,000
	*3	kW	10.0
	*2 Power input	kW	0.210
	*2 Current input	A	2.00/1.70
External dimension HxWxD		inch	54-1/4 x 21 x 21-5/8
		mm	1,378 x 534 x 548
Net weight		lbs (kg)	141 (64)
Heat exchanger			Cross fin (Aluminum fin and copper tube)
FAN	Type x Quantity		Sirocco fan x 1
	External	in.WG	<0.30> - 0.50 - <0.80>
	*4 static press.	Pa	<75> - 125 - <200>
	Motor Type		DC motor
	Motor output	kW	0.244
	Air flow rate (Low-Mid-High)	cfm	613 - 744 - 875
		m^3/min	17.3 - 21.1 - 24.8
		L/s	288 - 352 - 413
Sound pressure level *2 (Low-Mid-High)		dB <A>	32-36-40
Protection device			Fuse
Diameter of refrigerant pipe	Liquid (R410A)	inch (mm)	3/8 (9.52)Flare
	Gas (R410A)	inch (mm)	5/8 (15.88)Flare
Field drain pipe size		inch (mm)	3/4 (19.05) FPT

NOTE:

*1.Nominal cooling conditions
Indoor: 80°FD.B./67°FW.B. (26.7°CD.B./19.4°CW.B.), Outdoor: 95°FD.B. (35°CD.B.)
Pipe length: 25 ft. (7.6 m), Level difference: 0 ft. (0 m)

*2.The values are measured at the factory setting of external static pressure.

*3.Nominal heating conditions
Indoor: 70°FD.B. (21.1°CD.B.), Outdoor: 47°FD.B./43°FW.B. (8.3°CD.B./6.1°CW.B.)
Pipe length: 25 ft. (7.6 m), Level difference: 0 ft. (0 m)

*4.The factory setting of external static pressure is shown without < >.
Refer to "AIR FLOW DATA", according to the external static pressure, in DATA BOOK for the usable range of air flow rate.

MVZ-A36AA7

Power source			1-phase 208/230 V 60 Hz
Cooling capacity	*1	BTU/h	36,000
	*1	kW	10.6
	*2 Power input	kW	0.340
	*2 Current input	A	3.00/2.70
Heating capacity	*3	BTU/h	40,000
	*3	kW	11.7
	*2 Power input	kW	0.340
	*2 Current input	A	3.00/2.70
External dimension HxWxD		inch	54-1/4 x 21 x 21-5/8
		mm	1,378 x 534 x 548
Net weight		lbs (kg)	141 (64)
Heat exchanger			Cross fin (Aluminum fin and copper tube)
FAN	Type x Quantity		Sirocco fan x 1
	External	in.WG	<0.30> - 0.50 - <0.80>
	*4 static press.	Pa	<75> - 125 - <200>
	Motor Type		DC motor
	Motor output	kW	0.244
	Air flow rate	cfm	767 - 931 - 1,095
	(Low-Mid-High)	m^3/min	21.7 - 26.4 - 31.0
		L/s	362 - 440 - 517
Sound pressure level *2 (Low-Mid-High)		dB <A>	35-39-43
Protection device			Fuse
Diameter of refrigerant pipe	Liquid (R410A)	inch (mm)	3/8 (9.52)Flare
	Gas (R410A)	inch (mm)	5/8 (15.88)Flare
Field drain pipe size		inch (mm)	3/4 (19.05) FPT

NOTE:

*1.Nominal cooling conditions
Indoor: 80°FD.B./67°FW.B. (26.7°CD.B./19.4°CW.B.), Outdoor: 95°FD.B. (35°CD.B.)
Pipe length: 25 ft. (7.6 m), Level difference: 0 ft. (0 m)

*2.The values are measured at the factory setting of external static pressure.

*3.Nominal heating conditions
Indoor: 70°FD.B. (21.1°CD.B.), Outdoor: 47°FD.B./43°FW.B. (8.3°CD.B./6.1°CW.B.)
Pipe length: 25 ft. (7.6 m), Level difference: 0 ft. (0 m)

*4.The factory setting of external static pressure is shown without < >.
Refer to "AIR FLOW DATA", according to the external static pressure, in DATA BOOK for the usable range of air flow rate.

3 OUTLINES AND DIMENSIONS

3-1. INDOOR UNIT

Unit: inch

MVZ-A12AA7 MVZ-A18AA7 MVZ-A24AA7 MVZ-A30AA7 MVZ-A36AA7

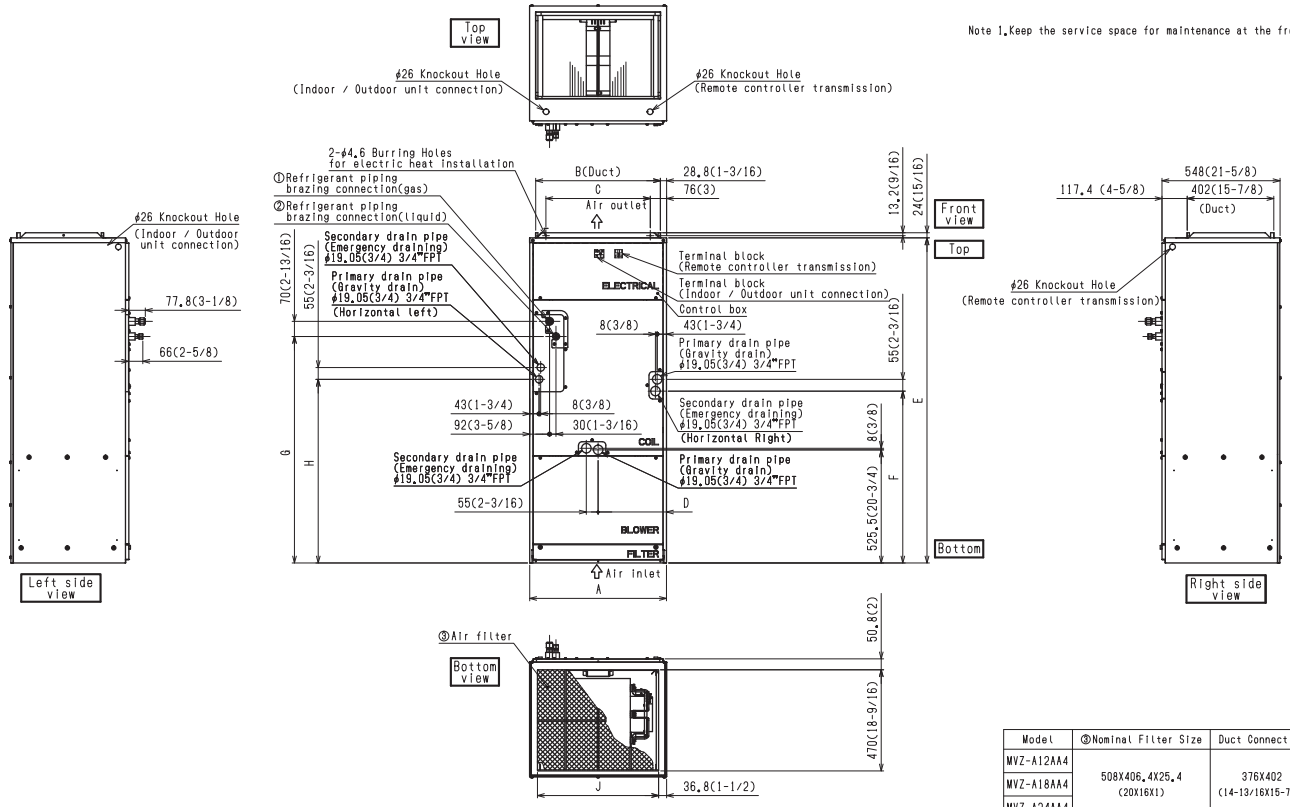

Model	③Nominal Filter Size	Duct Connection
MVZ-A12AA4	508X406.4X25.4 (20X16X1)	376X402 (14-13/16X15-7/8)
MVZ-A18AA4		
MVZ-A24AA4		
MVZ-A30AA4	508X508X25.4 (20X20X1)	477X402 (18-13/16X15-7/8)
MVZ-A36AA4		

Unit:mm(in.)

Model	A	B	C	D	E	F	G	H	J	①Gas pipe	②Liquid pipe
MVZ-A12AA7	432 (17)	376 (14-13/16)	281 (11-1/8)	224 (8-7/8)	1275 (50-1/4)	680 (26-13/16)	823 (32-7/16)	735.5 (29)	360 (14-3/16)	ϕ12.7 (1/2)	ϕ6.35 (1/4)
MVZ-A18AA7											
MVZ-A24AA7										ϕ15.88 (5/8)	ϕ9.52 (3/8)
MVZ-A30AA7	534 (21)	477 (18-13/16)	382.6 (15-1/8)	266.5 (10-1/2)	1378 (54-1/4)	737 (29-1/16)	953.5 (37-9/16)	792 (31-3/16)	461 (18-3/16)		
MVZ-A36AA7											

MVZ-A12AA7 MVZ-A18AA7 MVZ-A24AA7 MVZ-A30AA7 MVZ-A36AA7

Clearance Area

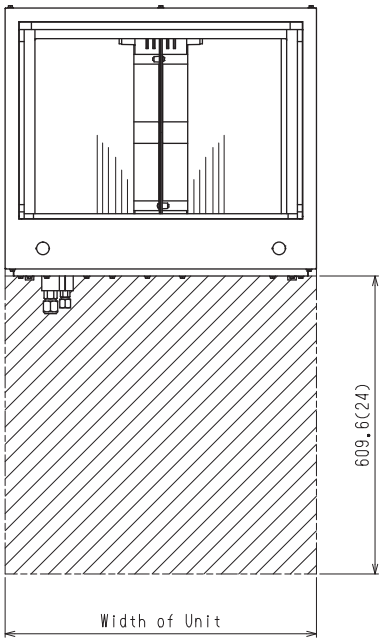

Vertical Installation

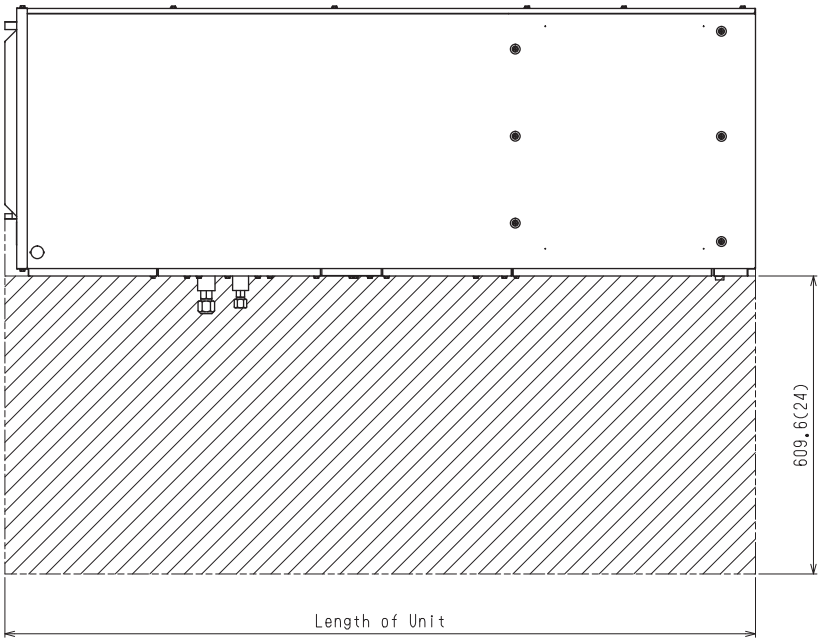

Horizontal Installation

4 POSITION OF THE CENTER OF GRAVITY

4-1. INDOOR UNIT

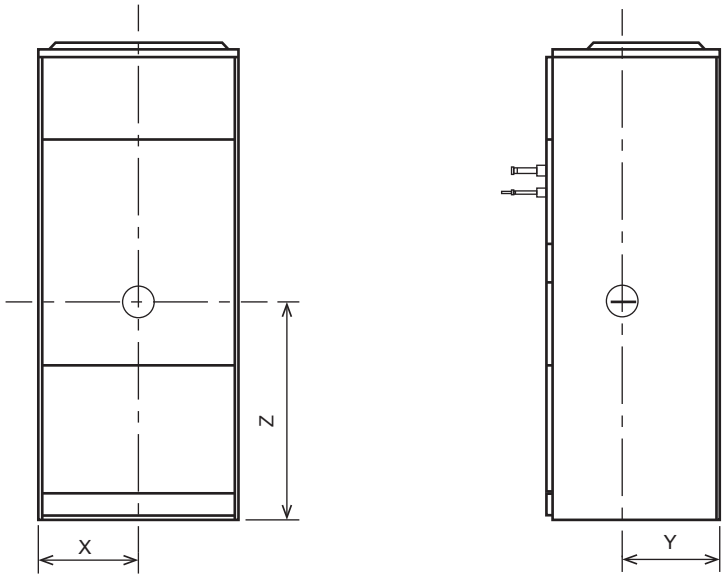

Unit: inch (mm)

Model name	X	Y	Z
MVZ-A12AA7 **MVZ-A18AA7** **MVZ-A24AA7**	8-7/8 (225)	11-1/4 (285)	24-1/16 (610)
MVZ-A30AA7 **MVZ-A36AA7**	11-1/16 (280)	11-7/16 (290)	26 (660)

5 WIRING DIAGRAM

5-1. INDOOR UNIT
MVZ-A12AA7 MVZ-A18AA7 MVZ-A24AA7 MVZ-A30AA7 MVZ-A36AA7

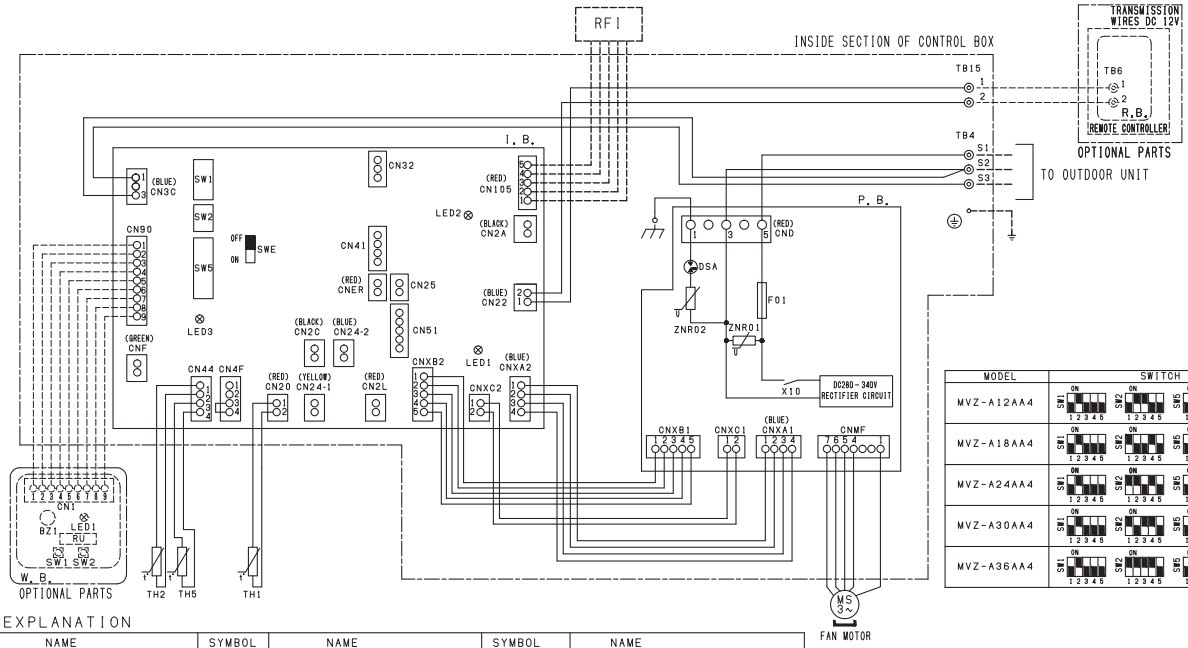

MODEL	SWITCH
MVZ-A12AA4	
MVZ-A18AA4	
MVZ-A24AA4	
MVZ-A30AA4	
MVZ-A36AA4	

SYMBOL EXPLANATION

SYMBOL	NAME
I. B.	INDOOR CONTROLLER BOARD
CN24-1	CONNECTOR (HEATER CONTROL 1ST)
CN24-2	CONNECTOR (HEATER CONTROL 2ND)
CN25	CONNECTOR (HUMIDITY OUTPUT)
CN2A	CONNECTOR (0-10V ANALOG INPUT)
CN2C	CONNECTOR (ERV OUTPUT)
CN2L	CONNECTOR (LOSSNAY)
CN32	CONNECTOR (REMOTE SWITCH)
CN41	CONNECTOR (HA TERMINAL-A)
CN51	CONNECTOR (CENTRALLY CONTROL)
CN90	CONNECTOR (WIRELESS)
CN105	CONNECTOR (RADIO FREQUENCY INTERFACE)
CNER	CONNECTOR (ERV INPUT)
CNF	CONNECTOR (HUMIDITY INPUT)
LED1	LED(POWER SUPPLY)
LED2	LED(REMOTE CONTROLLER SUPPLY)
LED3	LED(TRANSMISSION INDOOR-OUTDOOR)

SYMBOL	NAME
I. B.	INDOOR CONTROLLER BOARD
SW1	SWITCH (FOR MODEL SELECTION)
SW2	SWITCH (FOR CAPACITY CODE)
SW5	SWITCH (FOR MODE SELECTION)
SWE	CONNECTOR (EMERGENCY OPERATION)
P. B.	POWER SUPPLY BOARD
F01	FUSE AC250V 6.3A
ZNR01,02	VARISTOR
DSA	ARRESTOR
X10	AUX. RELAY
TH1	INTAKE AIR TEMP. THERMISTOR
TH2	PIPE TEMP. THERMISTOR/LIQUID
TH5	COND./EVA.TEMP. THERMISTOR
TB4	TERMINAL BLOCK (INDOOR/OUTDOOR CONNECTING LINE)
TB15	TERMINAL BLOCK (REMOTE CONTROLLER TRANSMISSION LINE)
RFI	RADIO FREQUENCY INTERFACE FOR RF THERMOSTAT

SYMBOL		NAME
OPTIONAL PARTS		
W. B.		IR WIRELESS REMOTE CONTROLLER BOARD
	RU	RECEIVING UNIT
	BZ1	BUZZER
	LED1	LED(RUN INDICATOR)
	SW1	SWITCH(HEATING ON/OFF)
	SW2	SWITCH(COOLING ON/OFF)
R. B.		WIRED REMOTE CONTROLLER BOARD
	TB6	TERMINAL BLOCK (REMOTE CONTROLLER TRANSMISSION LINE)

Note1. Since the outdoor side electric wiring may change be sure to check the outdoor unit electric wiring for servicing.
2. Indoor and outdoor connecting wires are made with polarities, make wiring matching terminal numbers (S1, S2, S3).
3. Symbols used in wiring diagram above are as follows.
:CONNECTOR
:TERMINAL
--- (HEAVY DOTTED LINE):FIELD WIRING
--- (THIN DOTTED LINE):OPTIONAL PARTS
4. Use copper supply wire.
UTILISER DES FILS D'ALIMENTATION EN CUIVRE.

6 REFRIGERANT SYSTEM DIAGRAM

6-1. INDOOR UNIT
MVZ-A12AA7 MVZ-A18AA7 MVZ-A24AA7 MVZ-A30AA7 MVZ-A36AA7

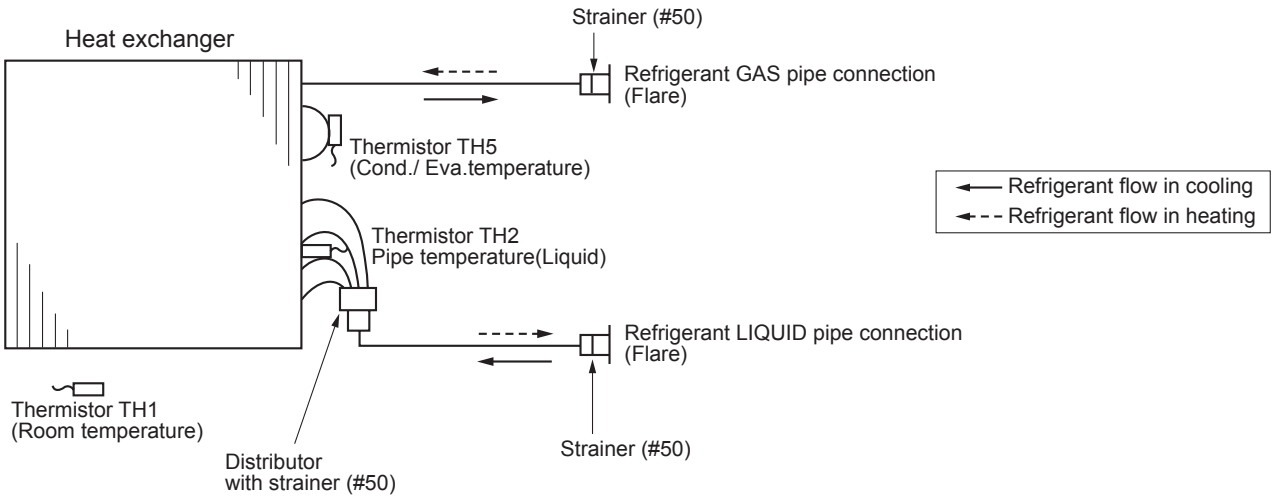

7 NOISE CRITERION CURVES

7-1. INDOOR UNIT

MVZ-A12AA7

Condition	A scale	LINE
High	32.0	———
Middle	28.0	- - -
Low	24.0	———

External Static Pressure: 75Pa

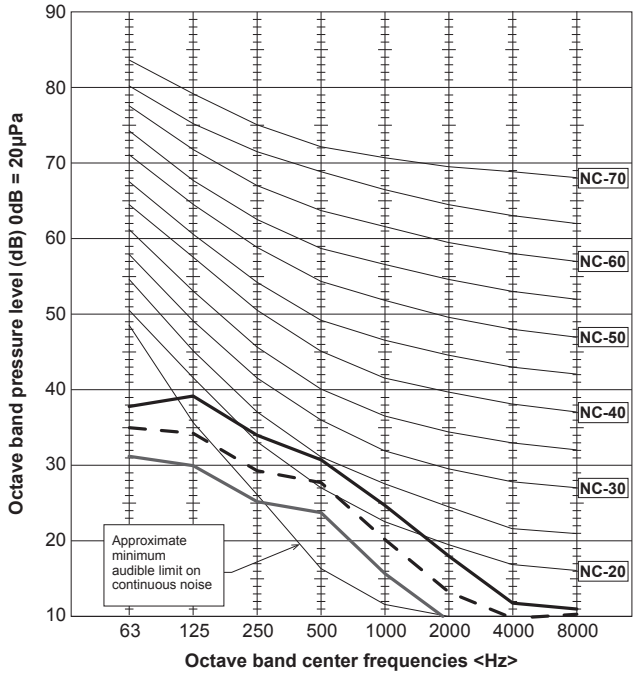

MVZ-A12AA7

Condition	A scale	LINE
High	35.0	———
Middle	31.0	- - -
Low	27.0	———

External Static Pressure: 125Pa

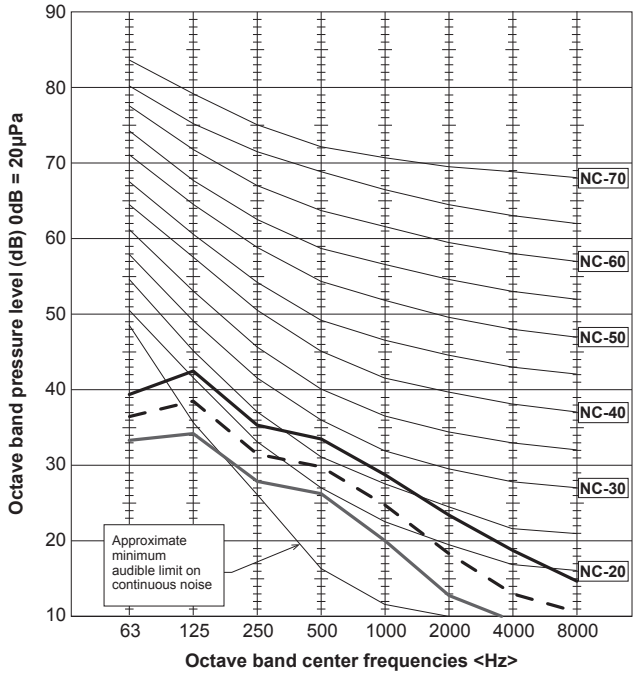

MVZ-A12AA7

Condition	A scale	LINE
High	41.0	———
Middle	36.0	- - -
Low	32.0	———

External Static Pressure: 200Pa

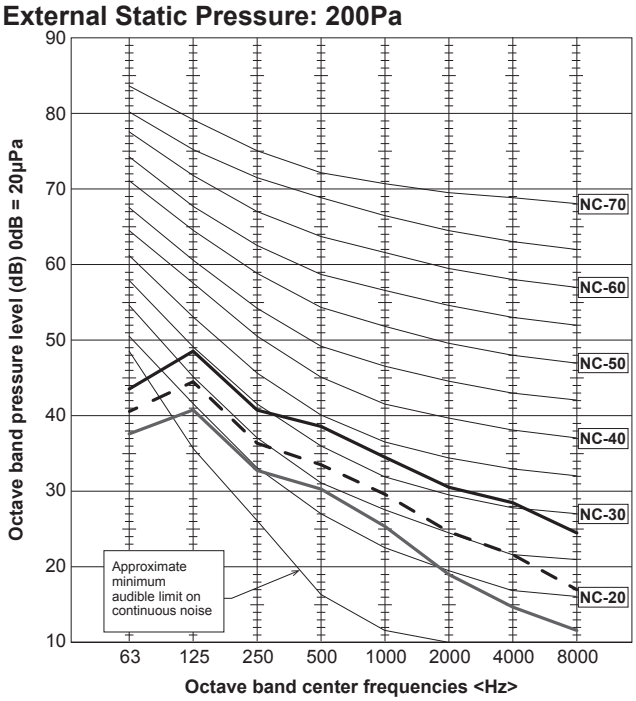

MVZ-A18AA7

Condition	A scale	LINE
High	34.0	———
Middle	30.0	- - -
Low	26.0	———

External Static Pressure: 75Pa

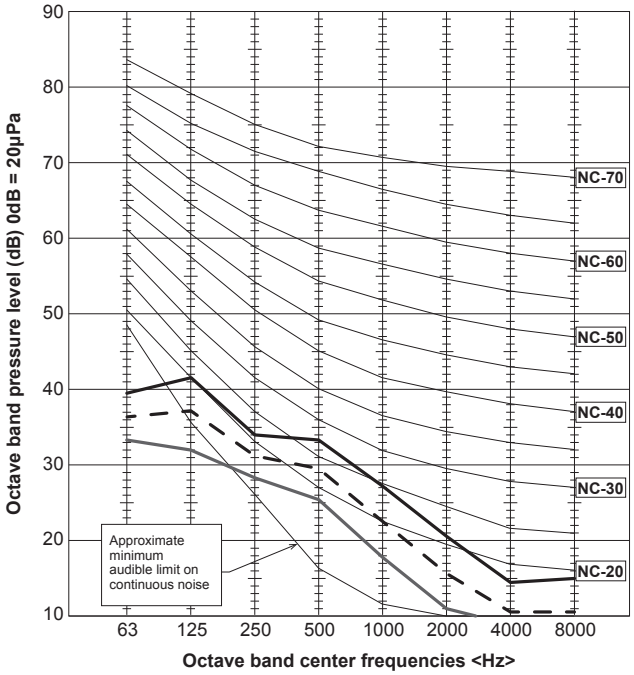

MVZ-A18AA7

Condition	A scale	LINE
High	36.0	———
Middle	32.0	- - -
Low	28.0	———

External Static Pressure: 125Pa

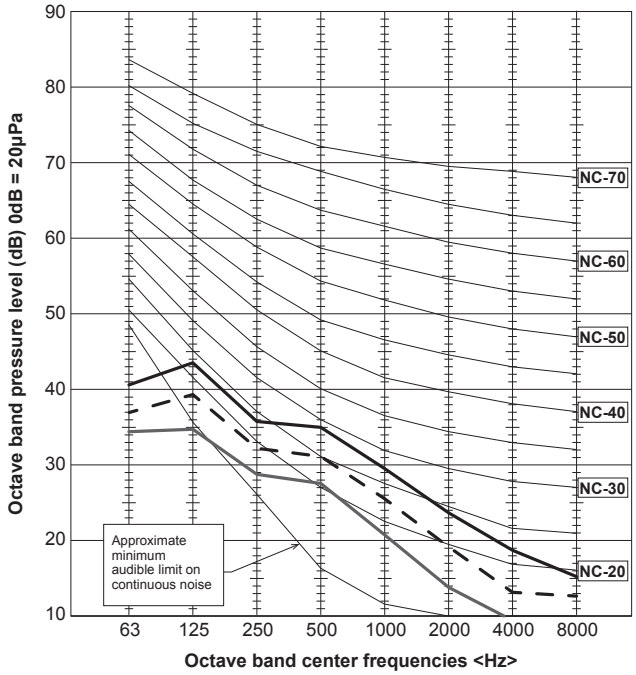

MVZ-A18AA7

Condition	A scale	LINE
High	41.0	———
Middle	37.0	- - -
Low	33.0	———

External Static Pressure: 200Pa

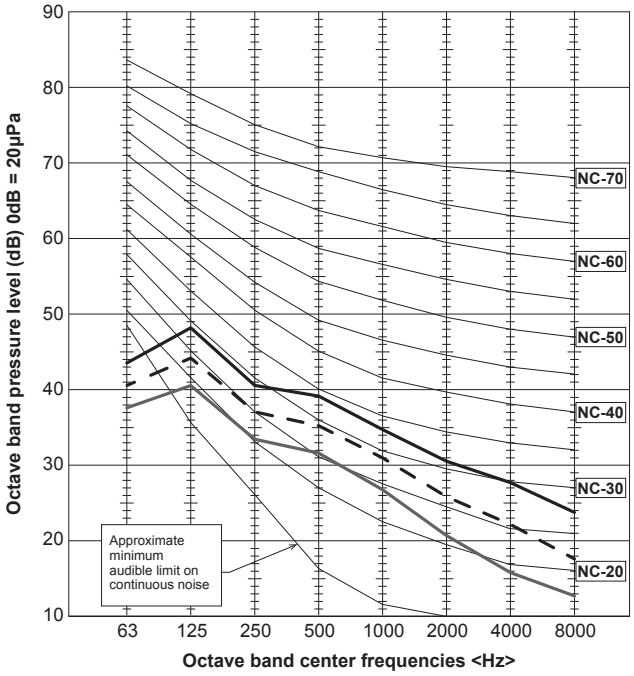

MVZ-A24AA7

Condition	A scale	LINE
High	36.0	——
Middle	33.0	- - -
Low	28.0	——

External Static Pressure: 75Pa

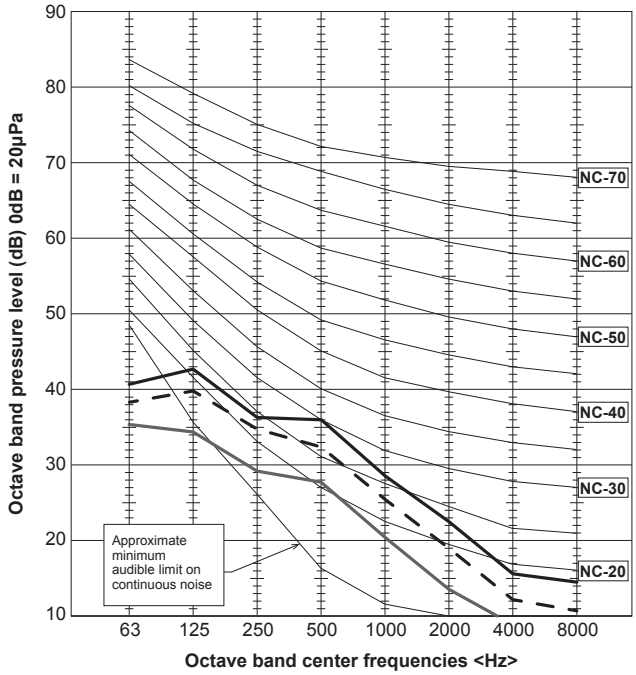

MVZ-A24AA7

Condition	A scale	LINE
High	38.0	——
Middle	34.0	- - -
Low	30.0	——

External Static Pressure: 125Pa

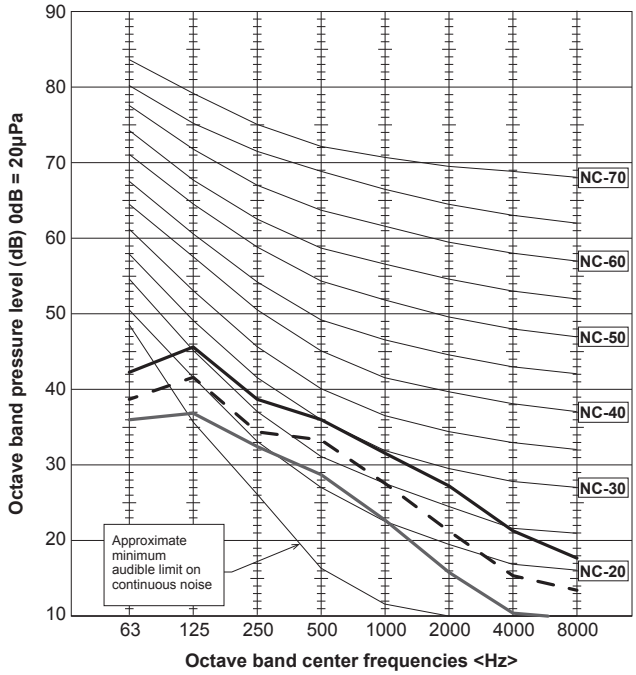

MVZ-A24AA7

Condition	A scale	LINE
High	42.0	——
Middle	38.0	- - -
Low	34.0	——

External Static Pressure: 200Pa

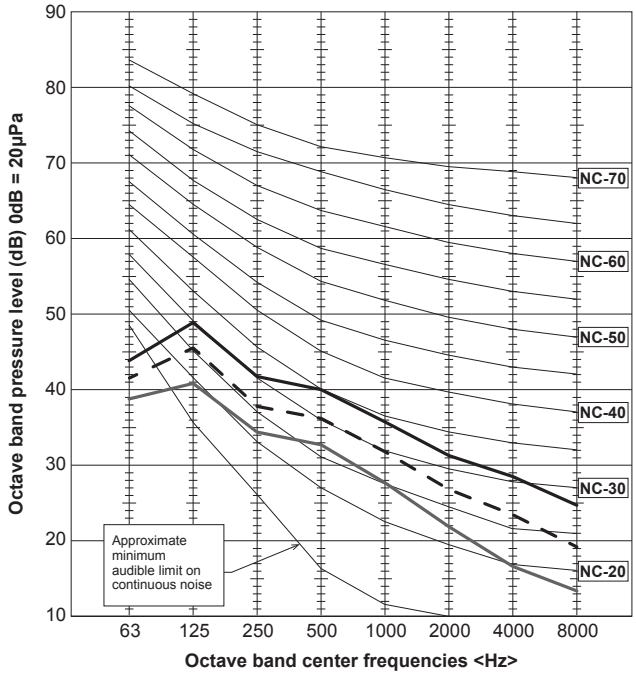

MVZ-A30AA7

Condition	A scale	LINE
High	38.0	———
Middle	34.0	- - -
Low	30.0	———

External Static Pressure: 75Pa

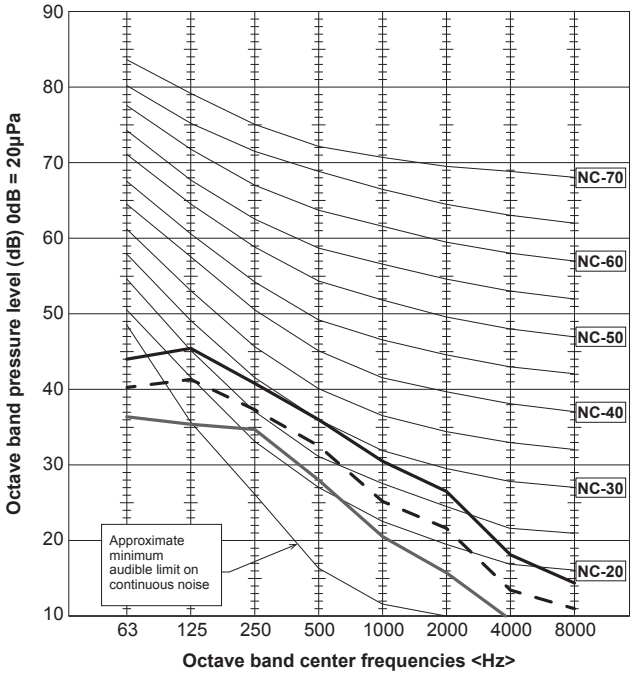

MVZ-A30AA7

Condition	A scale	LINE
High	40.0	———
Middle	36.0	- - -
Low	32.0	———

External Static Pressure: 125Pa

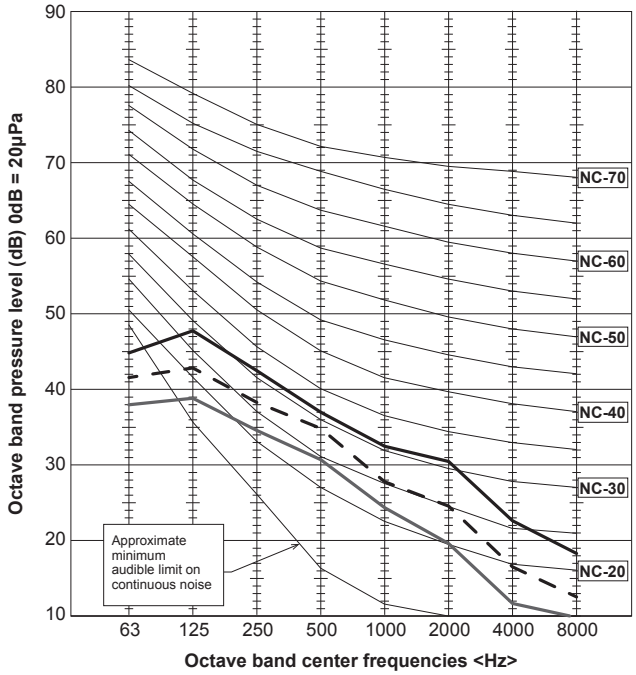

MVZ-A30AA7

Condition	A scale	LINE
High	43.0	———
Middle	39.0	- - -
Low	35.0	———

External Static Pressure: 200Pa

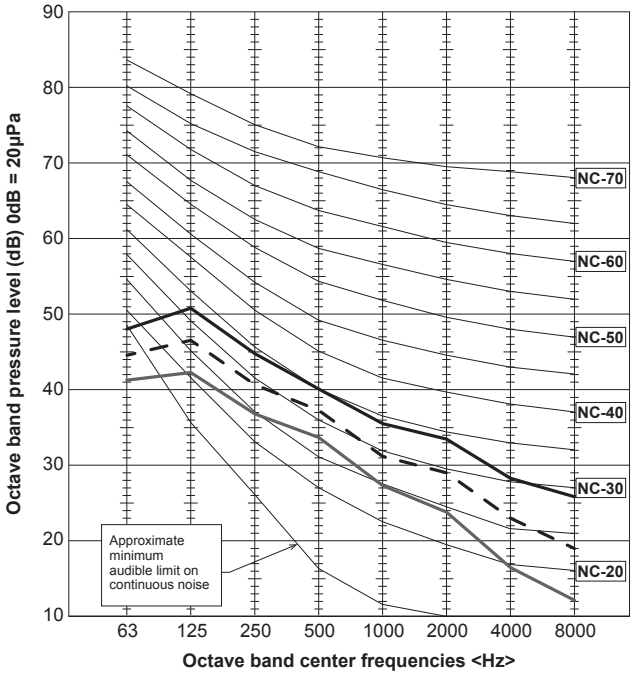

MVZ-A36AA7

Condition	A scale	LINE
High	41.0	———
Middle	37.0	- - -
Low	33.0	———

External Static Pressure: 75Pa

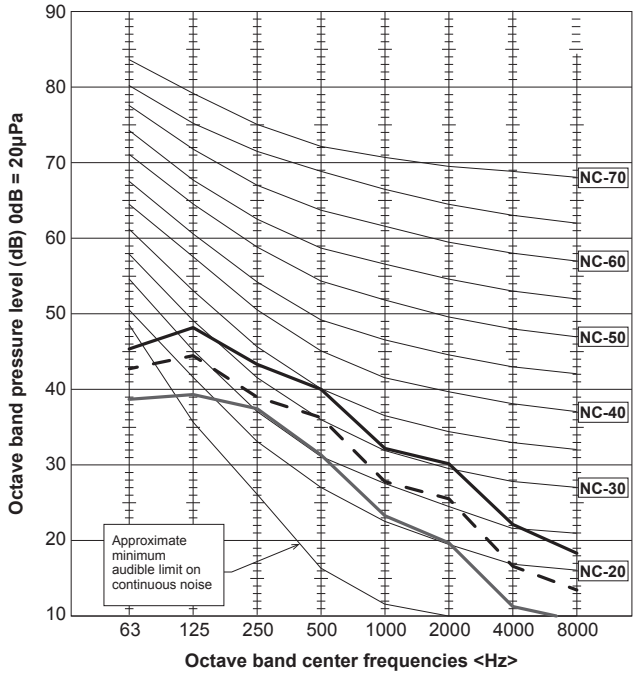

MVZ-A36AA7

Condition	A scale	LINE
High	43.0	———
Middle	39.0	- - -
Low	35.0	———

External Static Pressure: 125Pa

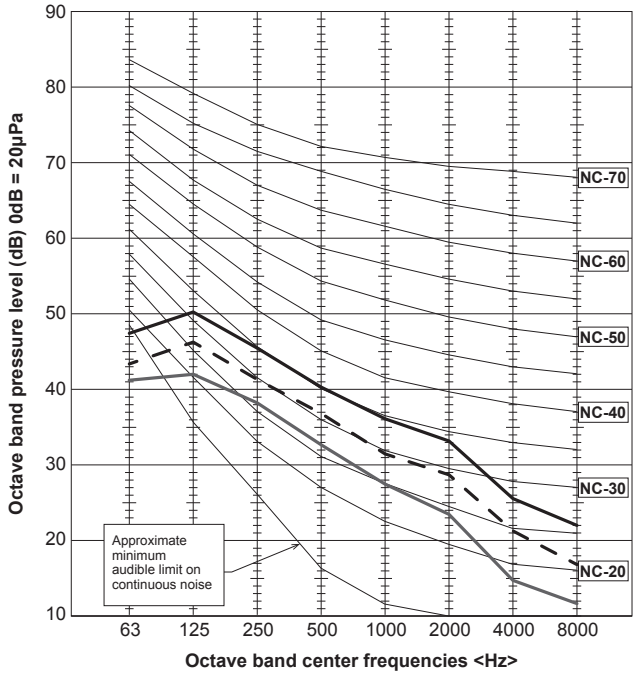

MVZ-A36AA7

Condition	A scale	LINE
High	45.0	———
Middle	41.0	- - -
Low	37.0	———

External Static Pressure: 200Pa

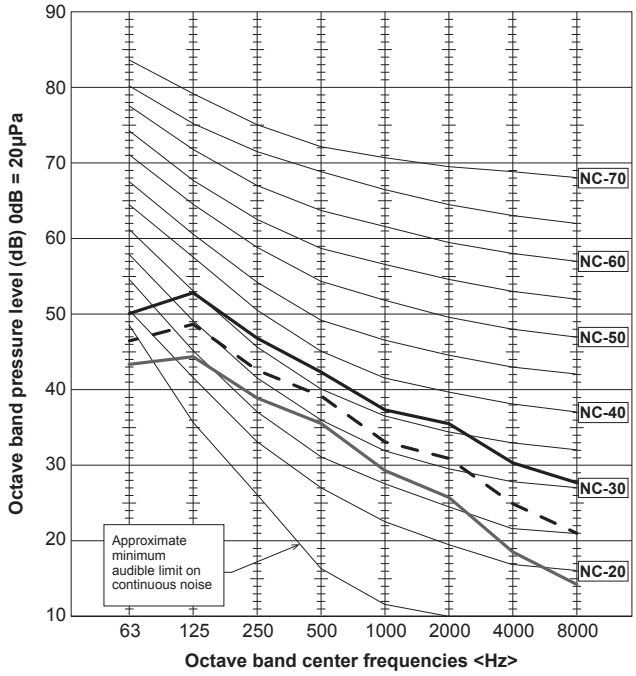

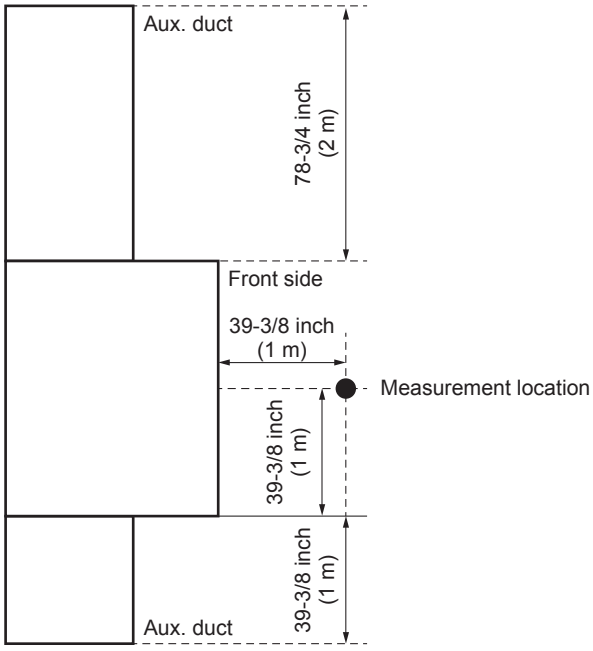

8-1. INDOOR UNIT
MVZ-A12AA7

Vertical, Horizontal Right, Horizontal Left

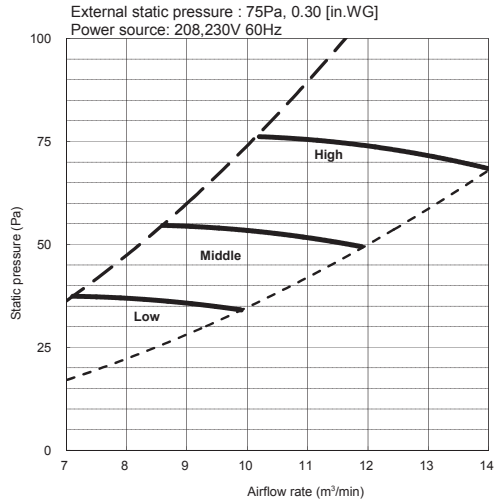

Down flow

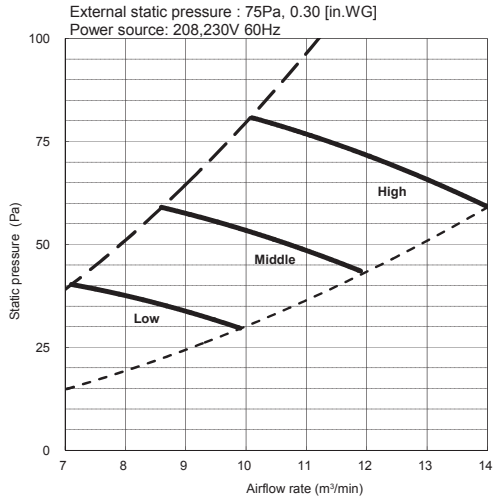

Vertical, Horizontal Right, Horizontal Left

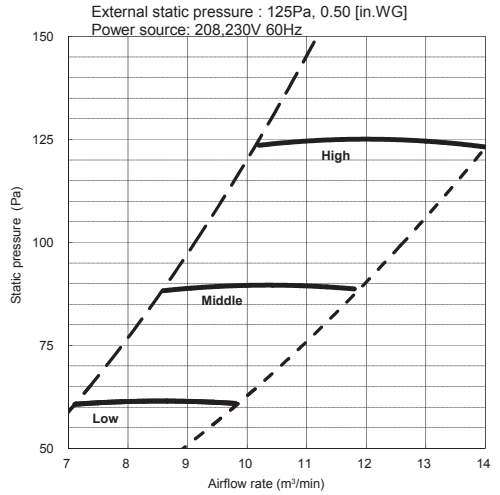

Down flow

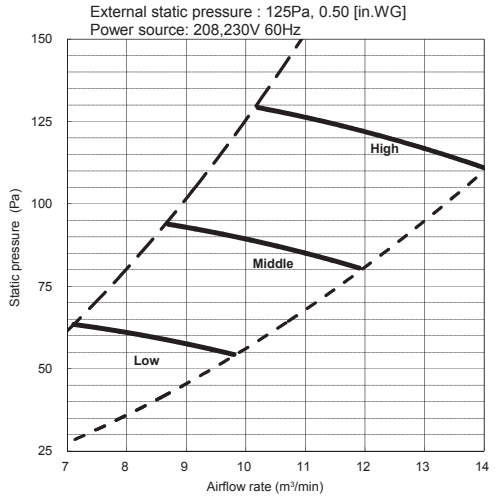

Vertical, Horizontal Right, Horizontal Left

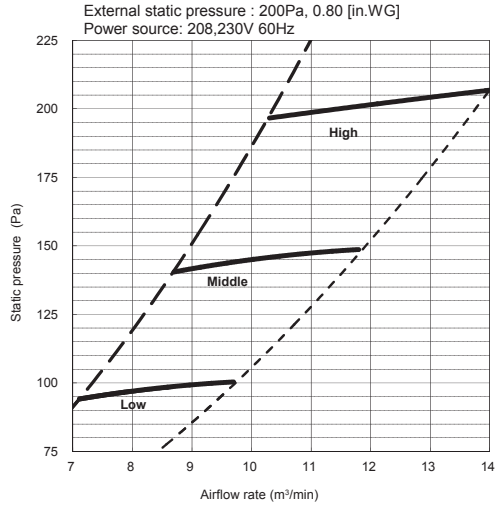

Down flow

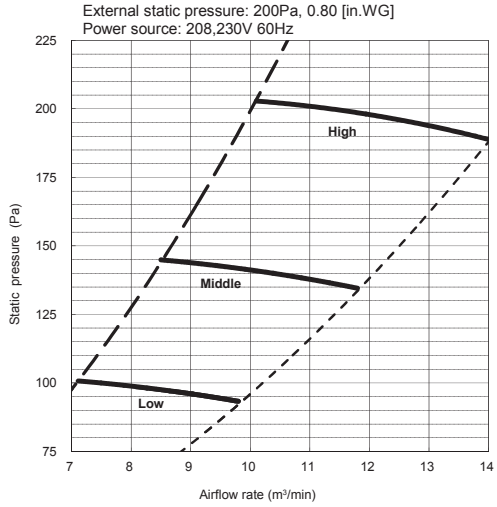

MVZ-A18AA7

Vertical, Horizontal Right, Horizontal Left

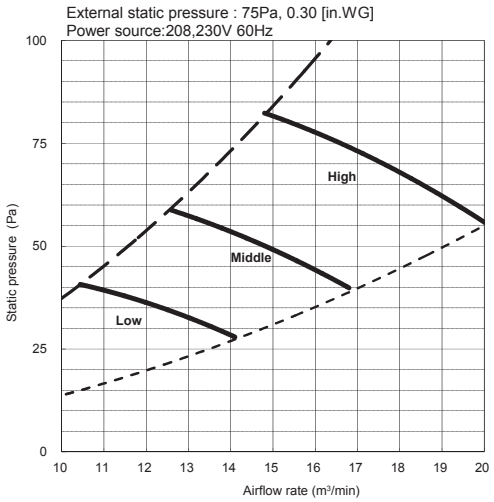

Down flow

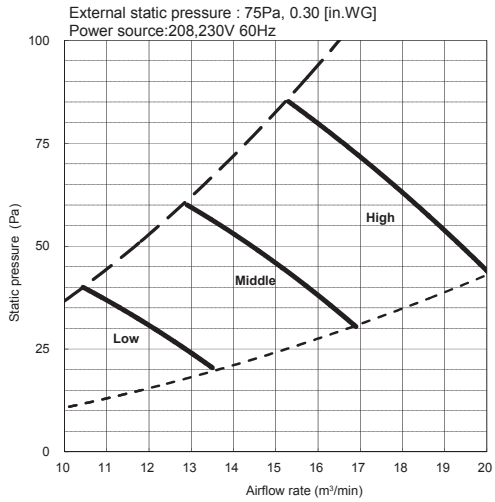

Vertical, Horizontal Right, Horizontal Left

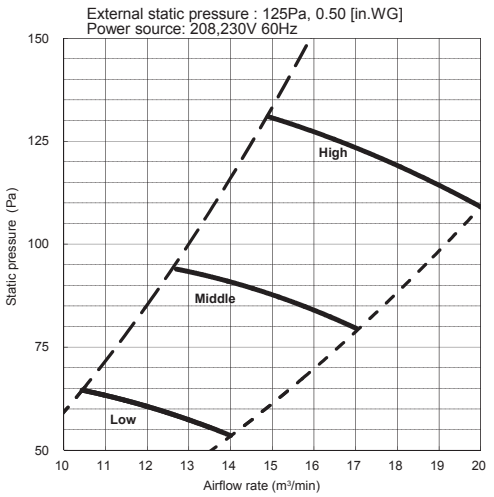

Down flow

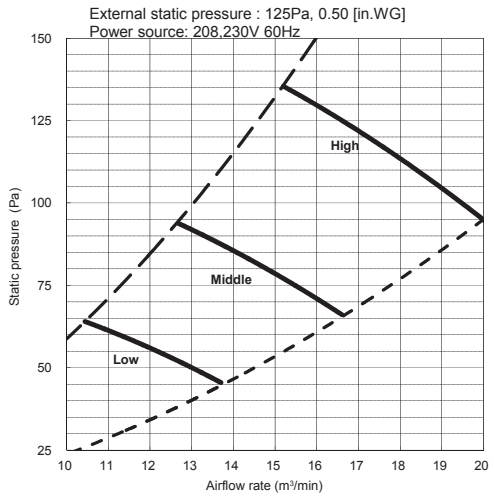

Vertical, Horizontal Right, Horizontal Left

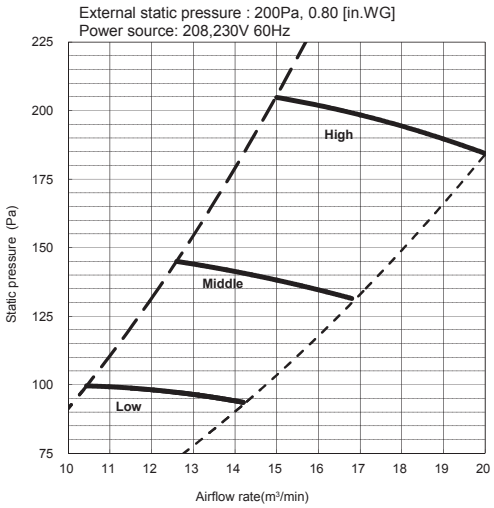

Down flow

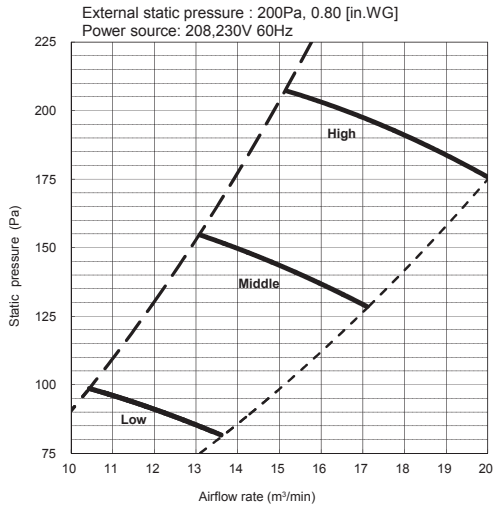

MVZ-A24AA7

Vertical, Horizontal Right, Horizontal Left

External static pressure : 75Pa, 0.30 [in.WG]
Power source: 208,230V 60Hz

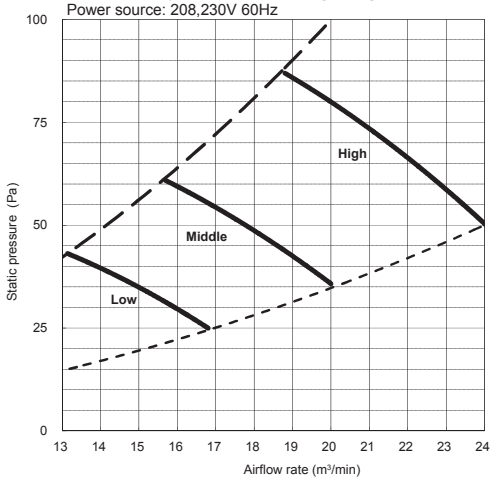

Down flow

External static pressure : 75Pa, 0.30 [in.WG]
Power source: 208,230V 60Hz

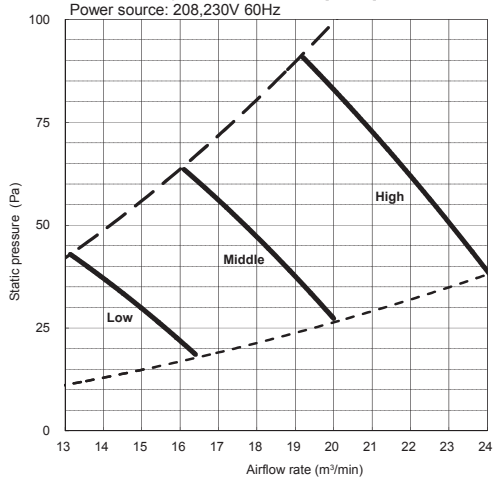

Vertical, Horizontal Right, Horizontal Left

External static pressure : 125Pa, 0.50 [in.WG]
Power source: 208,230V 60Hz

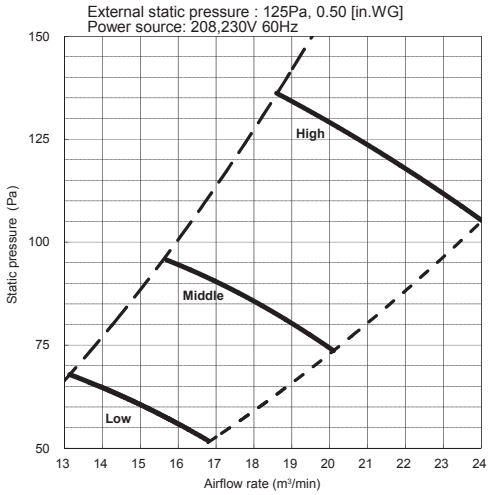

Down flow

External static pressure : 125Pa, 0.50 [in.WG]
Power source: 208,230V 60Hz

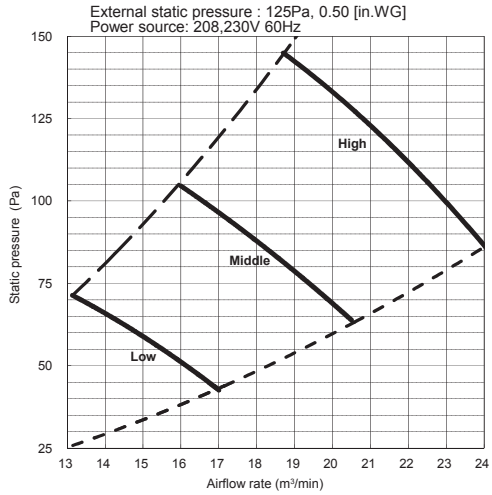

Vertical, Horizontal Right, Horizontal Left

External static pressure : 200Pa, 0.80 [in.WG]
Power source: 208,230V 60Hz

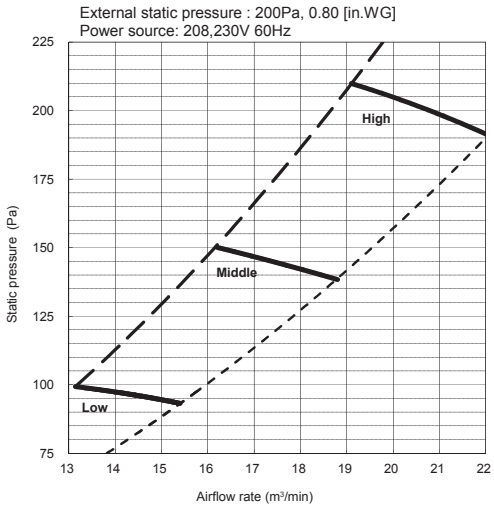

Down flow

External static pressure : 200Pa, 0.80 [in.WG]
Power source: 208,230V 60Hz

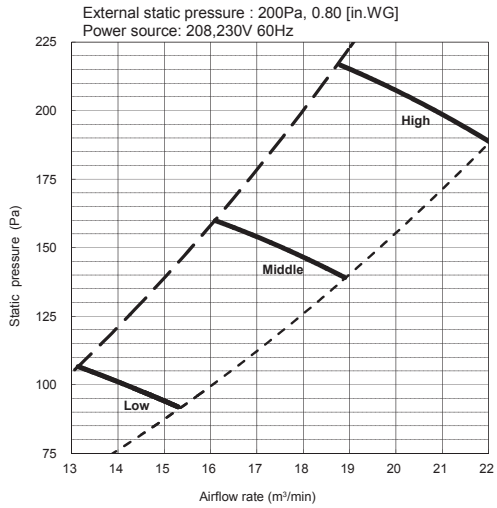

MVZ-A30AA7

Vertical, Horizontal Right, Horizontal Left

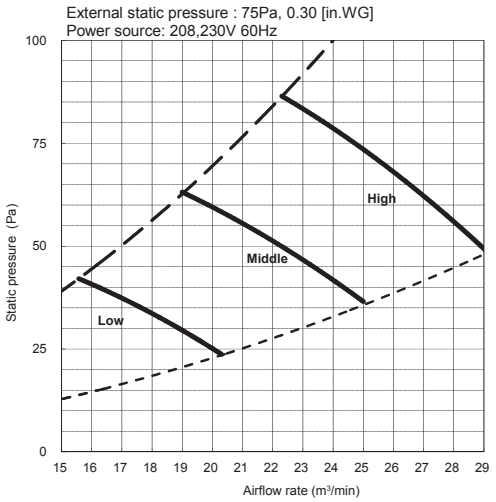

Down flow

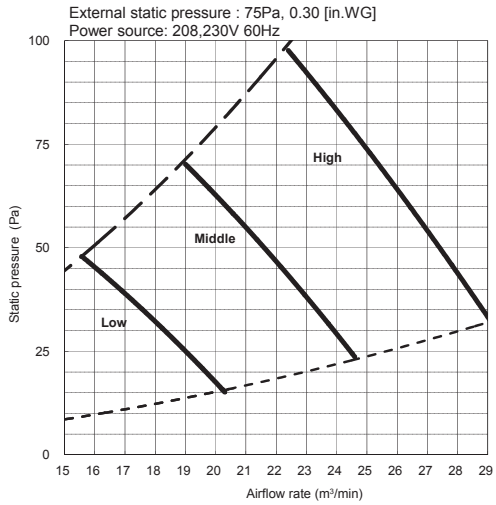

Vertical, Horizontal Right, Horizontal Left

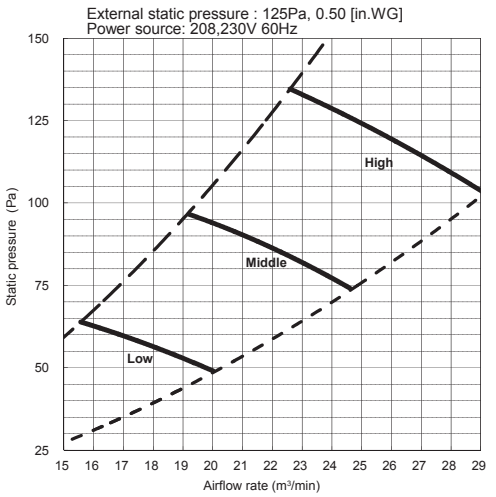

Down flow

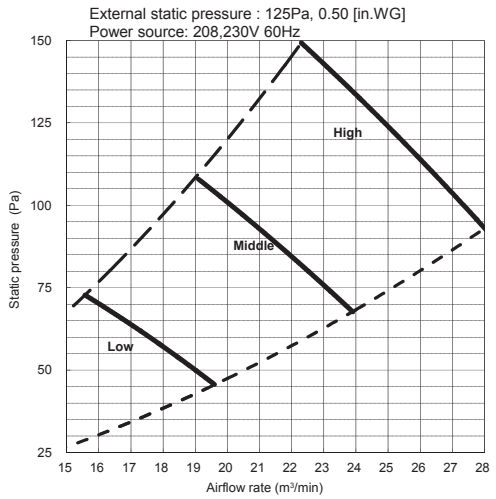

Vertical, Horizontal Right, Horizontal Left

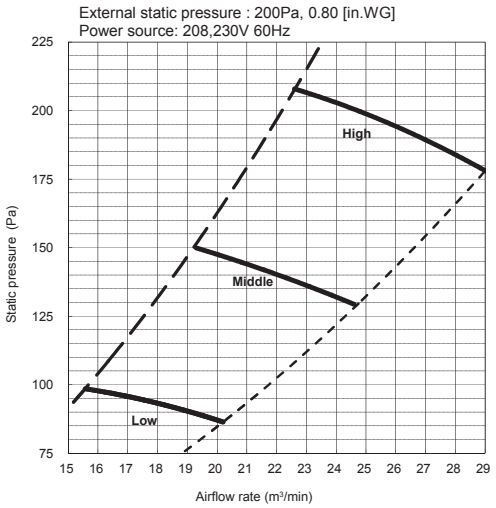

Down flow

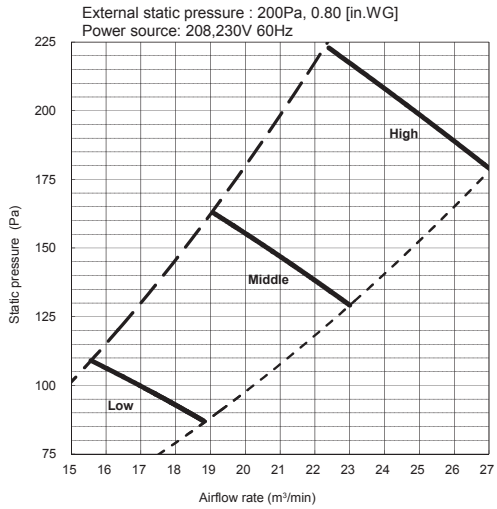

MVZ-A36AA7

Vertical, Horizontal Right, Horizontal Left

External static pressure : 75Pa, 0.30 [in.WG]
Power source: 208,230V 60Hz

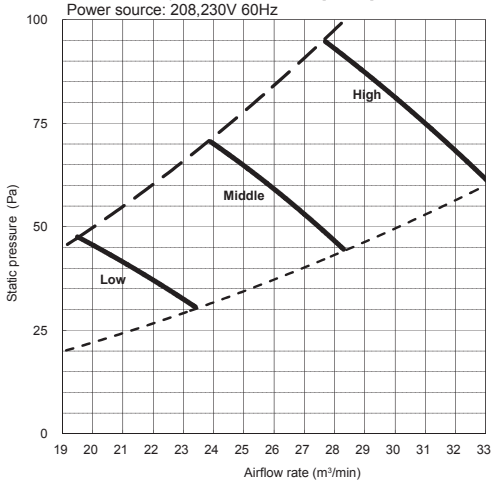

Down flow

External static pressure : 75Pa, 0.30 [in.WG]
Power source: 208,230V 60Hz

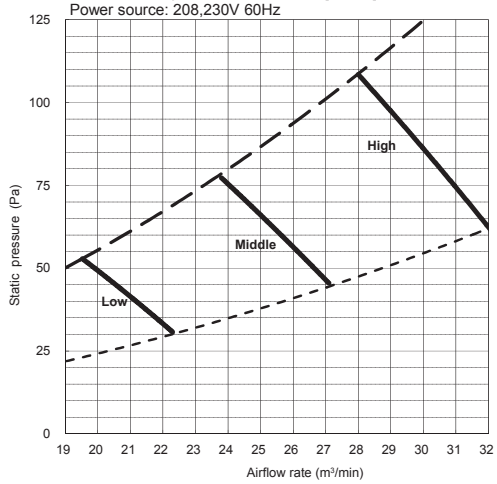

Vertical, Horizontal Right, Horizontal Left

External static pressure : 125Pa, 0.50 [in.WG]
Power source: 208,230V 60Hz

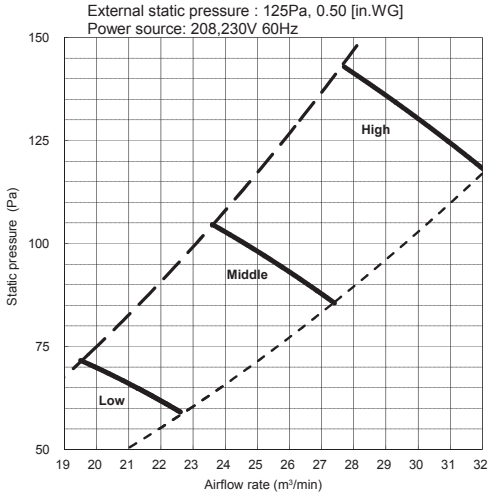

Down flow

External static pressure : 125Pa, 0.50 [in.WG]
Power source: 208,230V 60Hz

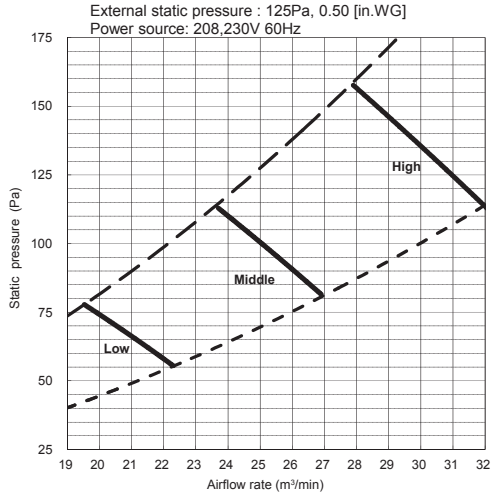

Vertical, Horizontal Right, Horizontal Left

External static pressure : 200Pa, 0.80 [in.WG]
Power source: 208,230V 60Hz

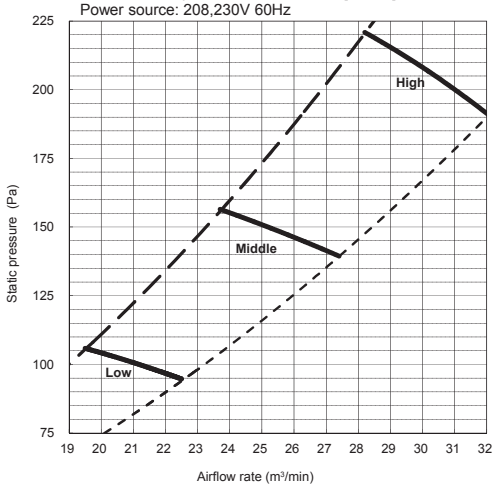

Down flow

External static pressure : 150Pa, 0.60 [in.WG]
Power source: 208,230V 60Hz

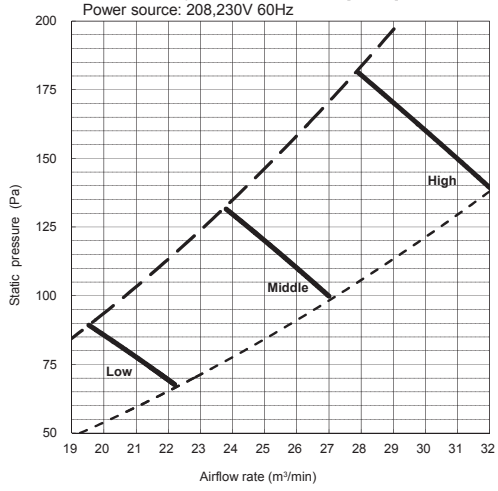

C. MXZ COMBINATION CHART

Indoor unit \ Outdoor unit			MXZ- C Series						
			2C20NA2-U1	3C24NA2-U1	3C30NA2-U1	4C36NA2-U1	5C42NA2-U1	8C48NA-U1	8C60NA-U1
M-series	Wall Mounted	MSZ-FE09NA	✔	✔	✔	✔	✔	✔	✔
		MSZ-FE12NA	✔	✔	✔	✔	✔	✔	✔
		MSZ-FH06NA	✔	✔	✔	✔	✔	✔	✔
		MSZ-FH09NA	✔	✔	✔	✔	✔	✔	✔
		MSZ-FH12NA	✔	✔	✔	✔	✔	✔	✔
		MSZ-FH15NA	✔	✔	✔	✔	✔	✔	✔
		MSZ-FH18NA2		✔	✔	✔	✔	✔	✔
		MSZ-GE06NA	✔	✔	✔	✔	✔	✔	✔
		MSZ-GE09NA	✔	✔	✔	✔	✔	✔	✔
		MSZ-GE12NA	✔	✔	✔	✔	✔	✔	✔
		MSZ-GE15NA	✔	✔	✔	✔	✔	✔	✔
		MSZ-GE18NA		✔	✔	✔	✔	✔	✔
		MSZ-GE24NA			✔	✔	✔	✔	✔
		MSZ-GL06NA	✔	✔	✔	✔	✔	✔	✔
		MSZ-GL09NA	✔	✔	✔	✔	✔	✔	✔
		MSZ-GL12NA	✔	✔	✔	✔	✔	✔	✔
		MSZ-GL15NA	✔	✔	✔	✔	✔	✔	✔
		MSZ-GL18NA		✔	✔	✔	✔	✔	✔
		MSZ-GL24NA			✔	✔	✔	✔	✔
		MSZ-EF09NAW(S)(B)	✔	✔	✔	✔	✔	✔	✔
		MSZ-EF12NAW(S)(B)	✔	✔	✔	✔	✔	✔	✔
		MSZ-EF15NAW(S)(B)	✔	✔	✔	✔	✔	✔	✔
		MSZ-EF18NAW(S)(B)		✔	✔	✔	✔	✔	✔
		MSZ-HM09NA							
		MSZ-HM12NA							
		MSZ-HM15NA							
		MSZ-HM18NA							
		MSZ-HM24NA							
	1-way Cassette	MLZ-KP09NA	✔	✔	✔	✔	✔	✔	✔
		MLZ-KP12NA	✔	✔	✔	✔	✔	✔	✔
		MLZ-KP18NA		✔	✔	✔	✔	✔	✔
	Floor Standing	MFZ-KJ09NA	✔	✔	✔	✔	✔	✔	✔
		MFZ-KJ12NA	✔	✔	✔	✔	✔	✔	✔
		MFZ-KJ15NA	✔	✔	✔	✔	✔	✔	✔
		MFZ-KJ18NA		✔	✔	✔	✔	✔	✔
	Vertical *2 (MultiPosition)	MVZ-A12AA	✔	✔	✔	✔	✔	✔	✔
		MVZ-A18AA		✔	✔	✔	✔	✔	✔
		MVZ-A24AA			✔	✔	✔	✔	✔
		MVZ-A30AA						✔	✔
		MVZ-A36AA						✔	✔
S-series	4-way Cassette	SLZ-KA09NA	✔	✔	✔	✔	✔	✔	✔
		SLZ-KA12NA	✔	✔	✔	✔	✔	✔	✔
		SLZ-KA15NA		✔	✔	✔	✔	✔	✔
	Ceiling Concealed *3 *4	SEZ-KD09NA	✔	✔	✔	✔	✔	✔	✔
		SEZ-KD12NA	✔	✔	✔	✔	✔	✔	✔
		SEZ-KD15NA	✔	✔	✔	✔	✔	✔	✔
		SEZ-KD18NA		✔	✔	✔	✔	✔	✔
	Vertical (MultiPosition)	SVZ-KP12NA							
		SVZ-KP18NA							
P-series	4-way Cassette *5	PLA-A12EA						✔	✔
		PLA-A18EA		✔	✔	✔	✔	✔	✔
		PLA-A24EA						✔	✔
		PLA-A30EA						✔	✔
		PLA-A36EA						✔	✔
		PLA-A42EA							
	Ceiling Suspended	PCA-A24KA			✔	✔	✔		
		PCA-A30KA							
		PCA-A36KA							
		PCA-A42KA							
	Ceiling Concealed *3 *4	PEAD-A09AA	✔	✔	✔	✔	✔	✔	✔
		PEAD-A12AA	✔	✔	✔	✔	✔	✔	✔
		PEAD-A15AA		✔	✔	✔	✔	✔	✔
		PEAD-A18AA		✔	✔	✔	✔	✔	✔
		PEAD-A24AA			✔	✔	✔	✔	✔
		PEAD-A30AA						✔	✔
		PEAD-A36AA						✔	✔
		PEAD-A42AA							

*1 When operating MXZ-2C20, 3C24, 3C30, 4C36 and 5C42NA2-U1, the total current of indoor units must be 3A or less.

*2 When connecting a multi-position unit(s), set additional constraints as follows. For connections other than those specified below, consult your dealer.

● **MXZ-8C48NA** (For each connected branch box)

Number of connecting multi-position unit	Constraints
2	Any indoor units other than multi-position models are not connectable.
1	· Only 1 SEZ or 1 PEAD can be included in the connection.

● **MXZ-8C60NA** (For each connected branch box)

Number of connecting multi-position unit	Constraints
2	Any indoor units other than multi-position models are not connectable.
1	· The total rated capacity (cooling) should be 100% or below including the MVZ-series unit. · Only 1 SEZ or 1 PEAD can be included in the connection.

*3 For MXZ-8C60NA; When connecting the SEZ and PEAD-series units, the total rated capacity (cooling) per 1 branch box should be 100% or below including the SEZ and PEAD-series units. (Only if connecting to PAC-MKA50/51BC)

*4 For MXZ-8C48NA; A branch box can connect to maximum 3 of the SEZ/PEAD-series units. When connecting with 3 of the SEZ/PEAD-series units per 1 branch box, other inside units cannot be connected.
For MXZ-8C60NA; A branch box can connect to maximum 2 of the SEZ/PEAD-series units. When connecting with 1 and over 1 of the SEZ/PEAD series units, the total ability including of the SEZ/PEAD is 100% and below 100%.

*5 For MXZ-8C48NA/8C60NA; When the system includes even 1 unit of PLA-A·EA7, the number of the maximum connectable indoor units is decreased as follows: 6 for MXZ-8C48NA-U1 and MXZ-8C60NA-U1

Indoor unit		Outdoor unit	MXZ- C Series					
			2C20NAHZ2-U1	3C24NAHZ2-U1	3C30NAHZ2-U1	4C36NAHZ-U1	5C42NAHZ-U1	8C48NAHZ-U1
M-series	Wall Mounted	MSZ-FE09NA	✔	✔	✔	✔	✔	✔
		MSZ-FE12NA	✔	✔	✔	✔	✔	✔
		MSZ-FH06NA	✔	✔	✔	✔	✔	✔
		MSZ-FH09NA	✔	✔	✔	✔	✔	✔
		MSZ-FH12NA	✔	✔	✔	✔	✔	✔
		MSZ-FH15NA	✔	✔	✔	✔	✔	✔
		MSZ-FH18NA2		✔	✔	✔	✔	✔
		MSZ-GE06NA	✔	✔	✔	✔	✔	✔
		MSZ-GE09NA	✔	✔	✔	✔	✔	✔
		MSZ-GE12NA	✔	✔	✔	✔	✔	✔
		MSZ-GE15NA	✔	✔	✔	✔	✔	✔
		MSZ-GE18NA		✔	✔	✔	✔	✔
		MSZ-GE24NA			✔	✔	✔	✔
		MSZ-GL06NA	✔	✔	✔	✔	✔	✔
		MSZ-GL09NA	✔	✔	✔	✔	✔	✔
		MSZ-GL12NA	✔	✔	✔	✔	✔	✔
		MSZ-GL15NA	✔	✔	✔	✔	✔	✔
		MSZ-GL18NA		✔	✔	✔	✔	✔
		MSZ-GL24NA			✔	✔	✔	✔
		MSZ-EF09NAW(S)(B)	✔	✔	✔	✔	✔	✔
		MSZ-EF12NAW(S)(B)	✔	✔	✔	✔	✔	✔
		MSZ-EF15NAW(S)(B)	✔	✔	✔	✔	✔	✔
		MSZ-EF18NAW(S)(B)		✔	✔	✔	✔	✔
		MSZ-HM09NA						
		MSZ-HM12NA						
		MSZ-HM15NA						
		MSZ-HM18NA						
		MSZ-HM24NA						
	1-way Cassette	MLZ-KP09NA	✔	✔	✔	✔	✔	✔
		MLZ-KP12NA	✔	✔	✔	✔	✔	✔
		MLZ-KP18NA		✔	✔	✔	✔	✔
	Floor Standing	MFZ-KJ09NA	✔	✔	✔	✔	✔	✔
		MFZ-KJ12NA	✔	✔	✔	✔	✔	✔
		MFZ-KJ15NA	✔	✔	✔	✔	✔	✔
		MFZ-KJ18NA		✔	✔	✔	✔	✔
	Vertical *2 (MultiPosition)	MVZ-A12AA	✔	✔	✔	✔	✔	✔
		MVZ-A18AA		✔	✔	✔	✔	✔
		MVZ-A24AA			✔	✔	✔	✔
		MVZ-A30AA				✔	✔	✔
		MVZ-A36AA				✔	✔	✔
S-series	4-way Cassette	SLZ-KA09NA	✔	✔	✔	✔	✔	✔
		SLZ-KA12NA	✔	✔	✔	✔	✔	✔
		SLZ-KA15NA		✔	✔	✔	✔	✔
	Ceiling Conceald *3	SEZ-KD09NA	✔	✔	✔	✔	✔	✔
		SEZ-KD12NA	✔	✔	✔	✔	✔	✔
		SEZ-KD15NA	✔	✔	✔	✔	✔	✔
		SEZ-KD18NA		✔	✔	✔	✔	✔
	Vertical (MultiPosition)	SVZ-KP12NA						
		SVZ-KP18NA						
P-series	4-way Cassette *4	PLA-A12EA				✔	✔	✔
		PLA-A18EA		✔	✔	✔	✔	✔
		PLA-A24EA				✔	✔	✔
		PLA-A30EA				✔	✔	✔
		PLA-A36EA				✔	✔	✔
		PLA-A42EA						
	Ceiling Suspended	PCA-A24KA			✔			
		PCA-A30KA						
		PCA-A36KA						
		PCA-A42KA						
	Ceiling Conceald *3	PEAD-A09AA	✔	✔	✔	✔	✔	✔
		PEAD-A12AA	✔	✔	✔	✔	✔	✔
		PEAD-A15AA		✔	✔	✔	✔	✔
		PEAD-A18AA		✔	✔	✔	✔	✔
		PEAD-A24AA			✔	✔	✔	✔
		PEAD-A30AA				✔	✔	✔
		PEAD-A36AA				✔	✔	✔
		PEAD-A42AA						

*1 When operating MXZ-2C20, 3C24 and 3C30NAHZ2-U1, the total current of indoor units must be 3A or less.

*2 When connecting a multi-position unit(s), set additional constraints as follows. For connections other than those specified below, consult your dealer.

● **MXZ-4C36NAHZ/5C42NAHZ/8C48NAHZ** (For each connected branch box)

Number of connecting multi-position unit	Constraints
2	Any indoor units other than multi-position models are not connectable.
1	Only 1 SEZ or 1 PEAD can be included in the connection.

*3 For MXZ-4C36NAHZ/5C42NAHZ/8C48NAHZ; A branch box can connect to maximum 3 of the SEZ/PEAD-series units. When connecting with 3 of the SEZ/PEAD-series units per 1 branch box, other inside units cannot be connected.

*4 For MXZ-4C36NAHZ/5C42NAHZ/8C48NAHZ; When the system includes even 1 unit of PLA-A·EA7, the number of the maximum connectable indoor units is decreased as follows: 3 for MXZ-4C36NAHZ-U1, 4 for MXZ-5C42NAHZ-U1, and 6 for MXZ-8C48NAHZ-U1