MITSUBISHI ELECTRIC

COOLING & HEATING

M-SERIES

SUBMITTAL DATA: MSZ-GE09NA-8

9,000 BTU/H WALL-MOUNTED INDOOR UNIT FOR MXZ-B MULTI-ZONE HEAT-PUMP SYSTEMS

Job Name:	Location:	Date:
Purchaser:	Engineer:	
Submitted to:	For ☐Reference ☐Approval ☐Construction	
System Designation:	Schedule No.:	

Indoor Unit: MSZ-GE09NA-8

Wireless Remote Controller

GENERAL FEATURES

- Wall-mounted indoor unit
- Standard Hybrid Catechin Prefilter is included with indoor unit
- Quiet operation
- Auto fan speed control: Quiet, Low, Medium, High, and Super High
- Hand-held Wireless Remote Controller
- Indoor unit powered from outdoor unit using A-Control
- Auto restart following a power outage
- Anti-allergy Enzyme Filter
- Limited warranty: five years parts and seven years compressor

ACCESSORIES

Indoor Unit

☐ Condensate Pump (230V; SI3100-230)

Controller Options

☐ Wireless Wall-mounted Remote Controller Kit (MHK1)*
☐ Portable Central Controller (MCCH1)*
☐ Outdoor Air Sensor (MOS1)*
☐ Wired Wall-mounted Controller (PAR-31MAA requires MAC-333IF)*
☐ Simple MA Remote Controller (PAC-YT53CRAU requires MAC-333IF)*

*See Submittal for information on each option.

☐ System Control Interface (MAC-333IF)
☐ Remote Temperature Sensor (M21-JKO-307)
☐ Lockdown Bracket for Hand-held Controller (RCMKP1CB)

SPECIFICATIONS

Cooling Capacity* . . . . . 9,000 Btu/h
Heating Capacity* . . . . . 10,900 Btu/h

*** Rating Conditions per AHRI Standard**
Cooling | Indoor: 80º F (27º C) DB / 67º F (19º C) WB
Cooling | Outdoor: 95º F (35º C) DB / 75º F (24º C) WB
Heating at 47ºF | Indoor: 70º F (21º C) DB / 60º F (16º C) WB
Heating at 47ºF | Outdoor: 47º F (8º C) DB / 43º F (6º C) WB
(For data on specific indoor units [all ducted, all non-ducted, and both ducted and non-ducted] combinations, see the MXZ-B Technical and Service Manual.)

Electrical Requirements
Power Supply . . . . . 208 / 230V, 1-Phase, 60 Hz
MCA . . . . . 1 A

Voltage
Indoor - Outdoor S1-S2 . . . . . AC 208 / 230V
Indoor - Outdoor S2-S3 . . . . . DC ±24V
Indoor - Remote Controller . . . . . MKH1 DC 3V
PAR-31MAA DC 12V
PAC-YT53CRAU DC 12V

Blower Motor (ECM) . . . . . 0.76 F.L.A.

Airflow (Quiet, Low, Medium, High, and Super High)
Cooling . . . . . 145 - 170 - 237 - 321 - 399 Dry CFM
109 - 134 - 201 - 286 - 364 Wet CFM
Heating . . . . . 145 - 170 - 237 - 321 - 406 CFM

Sound Pressure Level (Quiet, Low, Medium, High, and Super High)
Cooling . . . . . 19 - 22 - 30 - 37 - 43 dB(A)
Heating . . . . . 19 - 22 - 30 - 37 - 43 dB(A)

DIMENSIONS	UNIT INCHES / MM
W	31-7/16 / 799
D	9-1/8 / 232
H	11-5/8 / 295

Weight . . . . . 22 lbs. / 10 kg
External Finish . . . . . Munsell No. 1.0Y 9.2 / 0.2
Field Drainpipe Size O.D. . . . . 5/8" / 15.88 mm

Refrigerant Type R410A
Refrigerant Pipe Size O.D.
Gas Side . . . . . 3/8" / 9.52 mm
Liquid Side . . . . . 1/4" / 6.35 mm
Connection Method . . . . . Flared

R410A INVERTER

Specifications are subject to change without notice.

© 2013 Mitsubishi Electric US, Inc.

DIMENSIONS: MSZ-GE09NA-8

Unit: inch

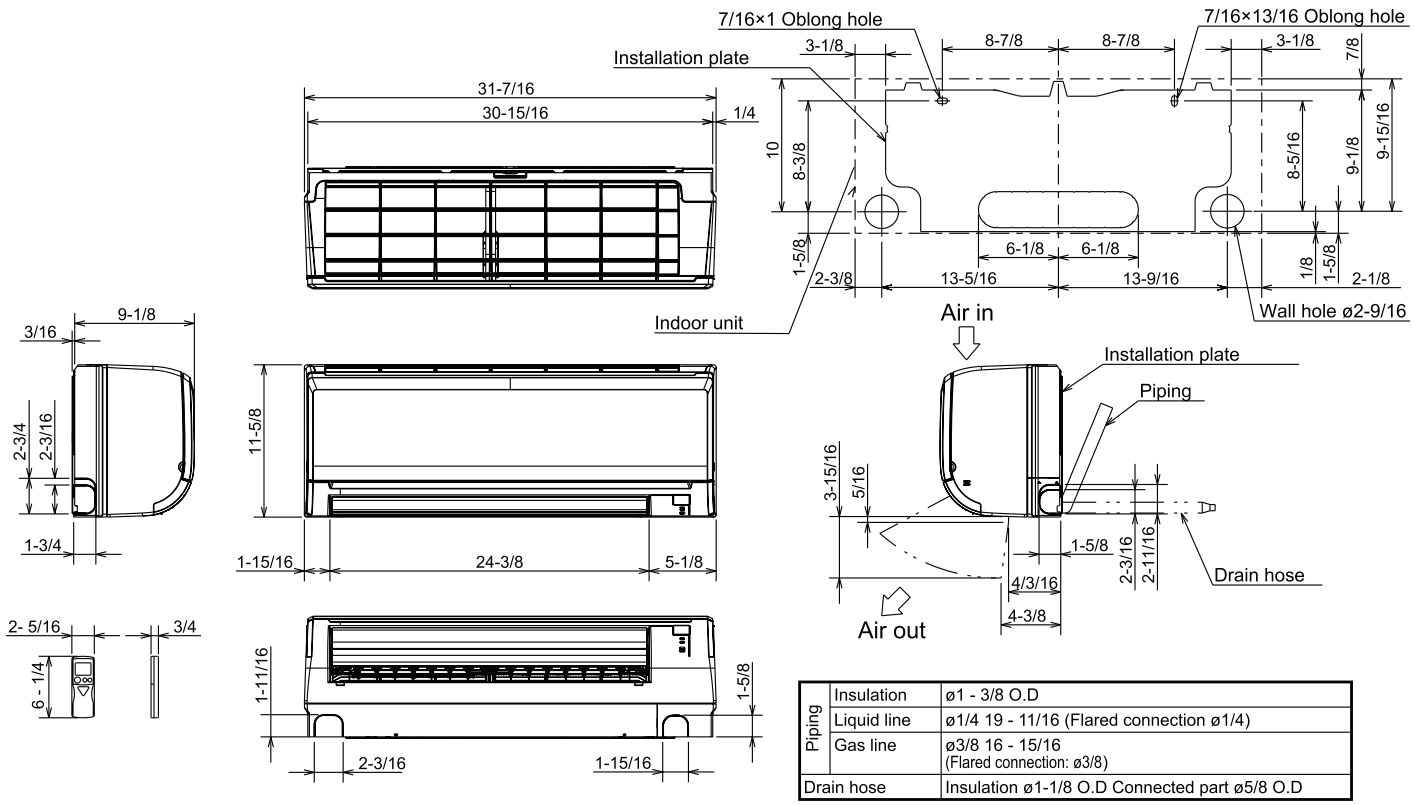

Piping	Insulation	ø1 - 3/8 O.D
	Liquid line	ø1/4 19 - 11/16 (Flared connection ø1/4)
	Gas line	ø3/8 16 - 15/16 (Flared connection: ø3/8)
Drain hose		Insulation ø1-1/8 O.D Connected part ø5/8 O.D

AHRI CERTIFIED™ www.ahridirectory.org
Unitary Small HP
AHRI Standard 210/240
Certification applies only when the complete system is listed with AHRI.

ETL LISTED US
Intertek

ENERGY STAR PARTNER

MITSUBISHI ELECTRIC
COOLING & HEATING
Live Better

1340 Satellite Boulevard
Suwanee, GA 30024
Tele: 678-376-2900 • Fax: 800-889-9904
Toll Free: 800-433-4822
www.mehvac.com

FORM# MSZ-GE09NA-8 FOR MXZ MULTI-ZONE SYSTEMS - 201311
Specifications are subject to change without notice.
© 2013 Mitsubishi Electric US, Inc.