5 WIRING DIAGRAM

MFZ-KA09NA MFZ-KA12NA MFZ-KA18NA

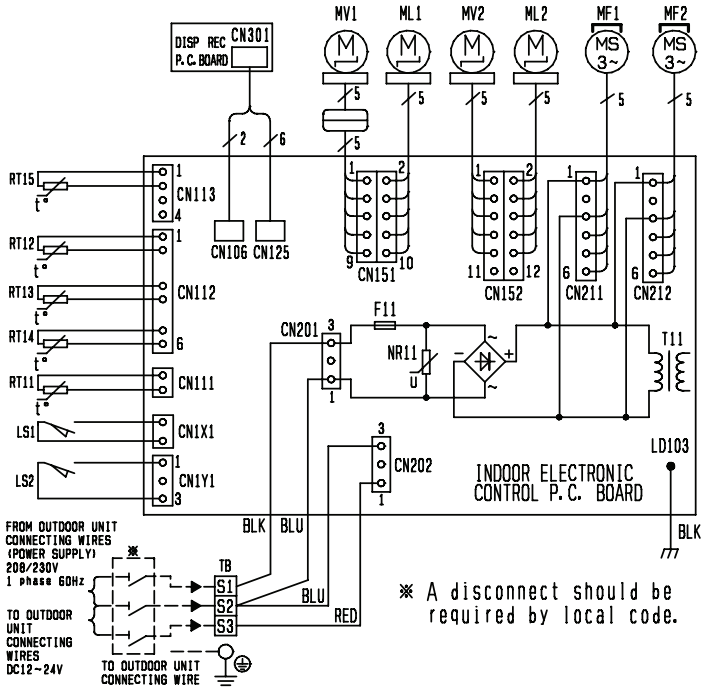

SYMBOL	NAME	SYMBOL	NAME
MF1	UPPER FAN MOTOR	RT11	ROOM TEMP. THERMISTOR
MF2	LOWER FAN MOTOR	RT12	COIL TEMP. THERMISTOR (MAIN1)
MV1	HORIZONTAL VANE MOTOR	RT13	COIL TEMP. THERMISTOR (SUB)
MV2	DAMPER MOTOR	RT14	COIL TEMP. THERMISTOR (MAIN2)
ML1	DAMPER LOCK MOTOR (RIGHT)	RT15	COIL TEMP. THERMISTOR (MAIN3)
ML2	DAMPER LOCK MOTOR (LEFT)	DB111	DIODE STACK
LS1	DAMPER LIMIT SWITCH (OPEN)	NR11	VARISTOR
LS2	DAMPER LIMIT SWITCH (CLOSE)	T11	TRANSFORMER
F11	FUSE (T3.15AL250V)		

NOTES:
1. About the outdoor side electric wiring refer to the outdoor unit electric wiring diagram for servicing.
2. Use copper conductors only. (For field wiring)
3. Symbols below indicate.
   : Terminal block
   : Connector